NWS EHB 6–525
AF TO 31P1–4–108–452–1
FAA TI 6345.1 V49

REVISION NO. 2

TECHNICAL MANUAL

MAINTENANCE INSTRUCTIONS
RADAR PRODUCT GENERATOR (RPG)

DOPPLER METEOROLOGICAL RADAR
WSR–88D

This revision supersedes NWS EHB 6–525 (AF TO 31P1–4–108–452–1; FAA TI 6345.1 V49)
dated 30 APRIL 2003 and subsequent changes:
CHANGE 1 dated 26 MARCH 2004, CHANGE 2 dated 02 APRIL 2004

OFFICE OF PRIMARY RESPONSIBILITY:
NATIONAL WEATHER SERVICE RADAR OPERATIONS CENTER

Distribution Statement A – Approved for public release; distribution is unlimited.

PUBLISHED UNDER AUTHORITY OF THE SECRETARIES OF
COMMERCE, THE AIR FORCE, THE NAVY, AND TRANSPORTATION

30 JUNE 2004

LIST OF EFFECTIVE PAGES

NOTE: The portion of the text affected by the changes is indicated by a vertical line in the outer margins of the page. Minor changes to illustrations are indicated by a miniature pointing hand. Extensive illustration changes and new illustrations do not have the miniature pointing hands.

Dates of issue for original and changed pages are:

Original ..... 0 ..... 30 June 2004

TOTAL NUMBER OF PAGES IN THIS MANUAL IS 1256 CONSISTING OF THE FOLLOWING:

Page No.	*Change No.	Page No.	*Change No.	Page No.	*Change No.
Title Page	0	6–125	0	6–166 blank	0
A – B	0	6–126 blank	0	6–167	0
C blank	0	6–127	0	6–168 blank	0
i – xxxvii	0	6–128 blank	0	6–169	0
xxxviii blank	0	6–129	0	6–170 blank	0
1–1 – 1–28	0	6–130 blank	0	6–171	0
2–1	0	6–131	0	6–172 blank	0
2–2 blank	0	6–132 blank	0	6–173	0
3–1	0	6–133	0	6–174 blank	0
3–2 blank	0	6–134 blank	0	6–175	0
4–1 – 4–400	0	6–135	0	6–176 blank	0
5–1 – 5–67	0	6–136 blank	0	6–177	0
5–68 blank	0	6–137	0	6–178 blank	0
FP–5–1	0	6–138 blank	0	6–179	0
FP–5–2 blank	0	6–139	0	6–180 blank	0
FP–5–3	0	6–140 blank	0	6–181	0
FP–5–4 blank	0	6–141	0	6–182 blank	0
FP–5–5	0	6–142 blank	0	6–183	0
FP–5–6 blank	0	6–143	0	6–184 blank	0
FP–5–7	0	6–144 blank	0	6–185	0
FP–5–8 blank	0	6–145	0	6–186 blank	0
FP–5–9	0	6–146 blank	0	6–187 – 6–464	0
FP–5–10 blank	0	6–147	0	6–468 blank	0
FP–5–11	0	6–148 blank	0	7–1 – 7–101	0
FP–5–12 blank	0	6–149	0	7–102 blank	0
FP–5–13	0	6–150 blank	0	FP–7–1	0
FP–5–14 blank	0	6–151	0	FP–7–2 blank	0
FP–5–15	0	6–152 blank	0	FP–7–3	0
FP–5–16 blank	0	6–153	0	FP–7–4 blank	0
FP–5–17	0	6–154 blank	0	FP–7–5	0
FP–5–18 blank	0	6–155	0	FP–7–6 blank	0
FP–5–19	0	6–156 blank	0	FP–7–7	0
FP–5–20 blank	0	6–157	0	FP–7–8 blank	0
FP–5–21	0	6–158 blank	0	FP–7–9	0
FP–5–22 blank	0	6–159	0	FP–7–10 blank	0
FP–5–23	0	6–160 blank	0	FP–7–11	0
FP–5–24 blank	0	6–161	0	FP–7–12 blank	0
6–1 – 6–121	0	6–162 blank	0	FP–7–13	0
6–122 blank	0	6–163	0	FP–7–14 blank	0
6–123	0	6–164 blank	0	FP–7–15	0
6–124 blank	0	6–165	0	FP–7–16 blank	0

* Zero in this column indicates an original page.

LIST OF EFFECTIVE PAGES

NOTE: The portion of the text affected by the changes is indicated by a vertical line in the outer margins of the page. Minor changes to illustrations are indicated by a miniature pointing hand. Extensive illustration changes and new illustrations do not have the miniature pointing hands.

FP–7–17 0
FP–7–18 blank 0
FP–7–19 0
FP–7–20 blank 0
FP–7–21 0
FP–7–22 blank 0
FP–7–23 0
FP–7–24 blank 0
FP–7–25 0
FP–7–26 blank 0
FP–7–27 0
FP–7–28 blank 0
FP–7–29 0
FP–7–30 blank 0
FP–7–31 0
FP–7–32 blank 0
FP–7–33 0
FP–7–34 blank 0
FP–7–35 0
FP–7–36 blank 0
FP–7–37 0
FP–7–38 blank 0
FP–7–39 0
FP–7–40 blank 0
FP–7–41 0
FP–7–42 blank 0
FP–7–43 0
FP–7–44 blank 0
FP–7–45 0
FP–7–46 blank 0
FP–7–47 0
FP–7–48 blank 0
FP–7–49 0
FP–7–50 blank 0
Index 1 – Index 54 0
Glossary 1– Glossary 10 . . 0

* Zero in this column indicates an original page.

TABLE OF CONTENTS

Paragraph	Title	Page
LIST OF ILLUSTRATIONS		xxv
LIST OF TABLES		xxix
FOREWORD		xxxiii
SAFETY SUMMARY		xxxv
CHAPTER 1	**GENERAL INFORMATION**	**1–1**
Section 1.1.	Introduction	1–1
1.1.1	GENERAL	1–1
1.1.2	RPG GROUP EQUIPMENT	1–1
1.1.2.1	RPG Functionality	1–2
1.1.2.2	Wideband Communications Links	1–2
1.1.2.3	Product Distribution Users	1–2
1.1.2.3.1	Narrowband Links	1–2
1.1.2.3.2	Network Connections	1–2
1.1.2.4	Remote Monitoring Subsystems (FAA Only)	1–2
1.1.2.5	Remote RDA Maintenance Terminal	1–6
1.1.2.6	Redundant Systems	1–6
1.1.2.6.1	NWS Redundant System	1–6
1.1.2.6.2	FAA Redundant System	1–7
1.1.2.7	Embedded Consoler Server (ECS)	1–7
1.1.3	RPGPCA EQUIPMENT PURPOSE	1–7
1.1.3.1	BDDS Processor UD70A1	1–7
1.1.3.2	Router UD70A2	1–7
1.1.3.3	Keyboard, Video, Mouse (KVM) Switch UD70A3	1–7
1.1.3.4	17–Inch Monitor UD70A4, Keyboard UD70A5, and Mouse UD70A6	1–7
1.1.3.5	RPG Processor UD70A7	1–7
1.1.3.6	Archive Storage Device UD70A8 and UD70A9	1–8
1.1.3.7	Power Administrator UD70A10	1–8
1.1.3.8	UPS UD70A11	1–8
1.1.3.9	RDA/RPG Gateway UD70A12	1–8
1.1.3.10	LAN Switch UD70A13	1–8
1.1.3.11	Dedicated/Dial Modem Rack Assembly UD70A14	1–8
1.1.3.12	Communication Server UD70A15, UD70A16, and UD70A17	1–8
1.1.3.13	RMS Power Administrators UD70/170A28 and UD70/170A29	1–8
1.1.3.14	Relay Box UD31	1–8
1.1.4	MSCF GROUP EQUIPMENT	1–9
1.1.5	MSCF GROUP EQUIPMENT PURPOSE	1–9

Paragraph	Title	Page
1.1.5.1	Local MSCF	1–10
1.1.5.2	Distant MSCF	1–10
1.1.5.3	Frame Relay Hub Router	1–10
1.1.6	LEADING PARTICULARS	1–11
Section 1.2.	Equipment Description	1–16
1.2.1	RPG GROUP EQUIPMENT SUPPLIED	1–16
1.2.2	RPG EQUIPMENT DESCRIPTION	1–16
1.2.2.1	RPG Processor/Communications Assembly UD70	1–16
1.2.2.1.1	Sun Ultra 5 BDDS Processor	1–17
1.2.2.1.2	Cisco Router	1–17
1.2.2.1.3	Raritan KVM Switch	1–17
1.2.2.1.4	Sun Ultra 10 RPG Processor	1–17
1.2.2.1.5	Iomega JAZ Archive Storage Device	1–17
1.2.2.1.6	APC Power Administrator	1–17
1.2.2.1.7	APC UPS	1–18
1.2.2.1.8	Polycom RDA/RPG Gateway	1–18
1.2.2.1.9	Cisco LAN Switch	1–18
1.2.2.1.10	PTI Communication Servers	1–18
1.2.2.1.11	Verilink 2100 CSU (NWS Only)	1–18
1.2.2.1.12	Narrowband Communication Equipment	1–18
1.2.2.2	FAA Unique Equipment	1–21
1.2.2.2.1	Baytech RMS Power Administrators	1–21
1.2.2.2.2	Relay Box	1–21
1.2.2.3	Remote RDA Maintenance Terminal (UD32)	1–21
1.2.3	MSCF GROUP EQUIPMENT SUPPLIED.	1–21
1.2.4	MSCF GROUP EQUIPMENT DESCRIPTION	1–23
1.2.4.1	MSCF Group	1–23
1.2.4.1.1	Sun Ultra 5 MSCF Terminal Suite	1–23
1.2.4.1.2	DoD AND FAA MSCF Distant MSCF Communications	1–23
1.2.4.1.3	NWS Local MSCF Communications	1–23
1.2.4.1.4	Xerox/Tektronix Phaser 750 MSCF Color Printer	1–24
Section 1.3.	Software Description	1–26
1.3.1	RPG GROUP SOFTWARE.	1–26
1.3.2	RPG SOFTWARE PROGRAM (CPCI 03)	1–26
1.3.2.1	Acquire Radar Data	1–26
1.3.2.2	Generate Products	1–26
1.3.2.3	Distribute Products	1–26
1.3.2.4	Control System	1–26
1.3.2.5	CPCI 03 Interface Requirements.	1–27

Paragraph	Title	Page
1.3.2.5.1	Hardware Interfaces	1–27
1.3.2.5.2	Operational Computer Program Interfaces	1–27
1.3.3	RPG COTS SOFTWARE (CPCI 12)	1–27
1.3.4	RPG SUPPORT SOFTWARE (CPCI 23)	1–27
Section 1.4	Reference Data	1–28
1.4.1	GLOSSARY OF TERMS	1–28
1.4.2	EQUIPMENT SUPPLIED.	1–28
1.4.3	STANDARD TOOLS	1–28
1.4.4	STANDARD TEST EQUIPMENT	1–28
1.4.5	SPECIAL PURPOSE TOOLS AND FIXTURES	1–28
1.4.6	CONSUMABLES/EXPENDABLES	1–28
CHAPTER 2	**NOT USED**	**2–1**
CHAPTER 3	**NOT USED**	**3–1**
CHAPTER 4	**OPERATIONS**	**4–1**
Section 4.1.	Introduction	4–1
4.1.1	GENERAL	4–1
4.1.2	CHAPTER ORGANIZATION	4–1
4.1.2.1	Section 4.1, Introduction	4–1
4.1.2.2	Section 4.2, MSCF	4–1
4.1.2.3	Section 4.3, UNIX Operating System	4–1
4.1.2.4	Section 4.4, Controls and Indicators	4–2
4.1.2.5	Section 4.5, Startup and Shutdown Procedures	4–2
4.1.2.6	Section 4.6, Unique Operating System Requirements/Programs	4–2
4.1.2.7	Section 4.7, Unique MSCF Human Computer Interface Requirements	4–2
4.1.2.8	Section 4.8, Off–Line Diagnostics Tests	4–2
4.1.2.9	Section 4.9, Emergency/Recovery Procedures	4–2
Section 4.2.	Master System Control Function	4–3
4.2.1	INTRODUCTION.	4–3
4.2.2	MSCF CONFIGURATIONS.	4–4
4.2.2.1	Local MSCF	4–4
4.2.2.2	Distant MSCF	4–4
4.2.3	DISPLAY	4–4
4.2.3.1	CDE	4–4
4.2.3.1.1	Windows	4–4
4.2.3.1.2	Workspaces	4–4
4.2.3.1.3	Controls	4–4

Paragraph	Title	Page
4.2.3.1.4	Menus	4–4
4.2.3.1.5	Front Panel	4–4
4.2.3.2	Graphical RPG Applications Software	4–8
4.2.3.2.1	RPG Human–Computer Interface	4–8
4.2.3.2.2	Windows	4–9
4.2.3.2.3	Icons	4–9
4.2.3.2.4	Buttons	4–10
4.2.3.2.5	Indicators	4–10
4.2.3.2.6	Color–coding	4–10
4.2.3.2.7	Warning_popups	4–10
4.2.3.2.8	Level of Change Authority (LOCA) Password Protection	4–11
4.2.3.2.9	Controls	4–13
4.2.3.2.10	Workspace Menu	4–17
4.2.3.3	Other Graphical Applications	4–18
4.2.3.3.1	Admintool	4–18
4.2.3.3.2	AnswerBook2	4–19
4.2.3.3.3	Netscape	4–19
4.2.3.3.4	PowerChute PLUS	4–19
4.2.3.4	Terminal Access Only	4–20
4.2.4	KEYBOARD	4–20
4.2.4.1	Boot Terminal Keyboard Functions	4–20
4.2.4.2	Non–Boot Terminal Keyboard Functions	4–20
4.2.5	MOUSE	4–21
4.2.5.1	Left Mouse Button	4–21
4.2.5.2	Middle Mouse Button	4–22
4.2.5.3	Right Mouse Button	4–22
Section 4.3.	UNIX Operating System	4–23
4.3.1	INTRODUCTION	4–23
4.3.1.1	Initialization of the UNIX OS	4–23
4.3.1.2	Operating System INIT Levels	4–26
4.3.1.3	User Accounts	4–27
4.3.1.4	Operating System User Modes	4–27
4.3.1.4.1	Command Line Login	4–27
4.3.1.4.2	CDE Login	4–27
4.3.1.4.3	Remote Login	4–27
4.3.1.5	Operating System Shells	4–28
4.3.1.5.1	Operating System Prompts	4–28
4.3.1.5.2	Use of Control Keys	4–29
4.3.2	UNIX OPERATING SYSTEM SUPPORT UTILITIES/PROGRAMS	4–29
4.3.2.1	Graphical Based Support Utilities	4–29
4.3.2.1.1	CDE Control Panel	4–29

Paragraph	Title	Page
4.3.2.1.2	CDE Workspace Menu	4–29
4.3.2.1.3	Help Utilities	4–30
4.3.2.2	Command Line–Based Support Utilities	4–30
4.3.2.2.1	Command Line Help Utilities	4–30
4.3.3	UNIX FILE SYSTEM	4–31
4.3.3.1	Directory Structure	4–31
4.3.3.2	Current and Parent Directory	4–31
4.3.3.3	File Naming Conventions	4–31
4.3.3.4	Absolute and Relative Paths	4–32
4.3.3.5	File Locations and Wildcards	4–32
4.3.4	UNIX OPERATING SYSTEM COMMANDS	4–32
4.3.4.1	General Syntax Rules	4–32
4.3.4.2	Multiple Commands and “Piped” Commands	4–32
4.3.4.3	Commands	4–33
4.3.4.3.1	Command Availability, Help, History and Repetition	4–34
4.3.4.3.2	File System Navigation	4–36
4.3.4.3.3	File Searches	4–38
4.3.4.3.4	File Listings and Display	4–39
4.3.4.3.5	Creating New Directories and Files	4–44
4.3.4.3.6	File Manipulation	4–47
4.3.4.3.7	Shell and Environment Variables	4–51
4.3.4.3.8	System Interrogation	4–54
4.3.4.3.9	File Access Ownership/Permissions	4–59
4.3.4.3.10	Printing	4–62
4.3.4.3.11	Removable Media	4–63
4.3.4.3.12	Networking	4–68
4.3.4.3.13	Miscellaneous User Commands	4–70
4.3.4.3.14	Miscellaneous System Administrator Commands	4–74
4.3.5	USE OF VI	4–79
Section 4.4.	Controls and Indicators	4–82
4.4.1	GENERAL	4–82
4.4.1.1	Figure and Index No. Column	4–82
4.4.1.2	Control/Indicator Nomenclature Column	4–82
4.4.1.3	Function Column	4–82
4.4.1.4	Normal Position/State Column	4–82
4.4.2	REMOTE RDA MAINTENANCE TERMINAL UD32	4–82
4.4.2.1	Remote Maintenance Terminal (Compaq) UD32A10 Controls and Indicators	4–82
4.4.2.2	Dual A/B Switch (Black Box) UD32A2 Controls and Indicators	4–83
4.4.2.3	STATMUX (Penril VCX–150) UD32A3 Controls and Indicators	4–83
4.4.2.4	Dial–port Modem (Codex 326x) UD32A4 Controls and Indicators	4–83

Paragraph	Title	Page
4.4.3	RPG PROCESSOR/COMMUNICATIONS ASSEMBLY CABINET UD70/170	4–83
4.4.3.1	BDDS Processor (Sun Ultra 5) UD70A1 Controls and Indicators	4–84
4.4.3.2	Router (Cisco 3640) UD70A2 Controls and Indicators	4–84
4.4.3.3	KVM Switch (Raritan SMX18) UD70A3 Controls and Indicators	4–84
4.4.3.4	RPG 17–Inch Monitor (Sun) UD70A4 Controls and Indicators	4–84
4.4.3.5	RPG Keyboard and Mouse (Sun) UD70A5/UD70A6 Controls and Indicators	4–84
4.4.3.6	RPG Processor (Sun Ultra 10) UD70A7 Controls and Indicators	4–84
4.4.3.7	Archive Storage Device (Iomega Jaz) UD70A8 and UD70A9 Controls and Indicators	4–84
4.4.3.8	Power Administrator (APC MasterSwitch) UD70A10 Controls and Indicators	4–84
4.4.3.9	UPS (APC SmartUPS 1400) UD70A11 Controls and Indicators	4–84
4.4.3.10	RDA/RPG Gateway (Polycom) UD70A12 Controls and Indicators	4–84
4.4.3.11	LAN Switch (Cisco 2924) UD70A13 Controls and Indicators	4–84
4.4.3.12	Dedicated/Dial Modem Rack Assembly (Codex 326X) UD70A14 Controls and Indicators	4–84
4.4.3.13	Dial Port Modem (Codex 3262) UD70A14A1–A4 and Dedicated Port Modem (Codex 3263) UD70A14A5–A21 Controls and Indicators	4–84
4.4.3.14	Communication Server (PTI MPS 800) UD70A15, UD70A16, UD70A17 Controls and Indicators	4–84
4.4.3.15	Channel Service Unit (CSU) UD70A18 Controls and Indicators	4–84
4.4.3.16	Short Haul Modem UD70A19 Controls and Indicators	4–85
4.4.3.17	RS–232/RS–422 Converter (Black Box) UD70A20 Controls and Indicators	4–85
4.4.3.18	AC Power Distribution Panel UD70A22 Controls and Indicators	4–85
4.4.3.19	RMS Power Administrator (Baytech RPC–5) UD70/170A28/A29 Controls and Indicators	4–85
4.4.4	MSCF WORKSTATION UD71	4–85
4.4.4.1	MSCF Processor (Sun Ultra 5) UD71A1 Controls and Indicators	4–85
4.4.4.2	21–Inch Monitor (Sun) UD71A2 Controls and Indicators	4–85
4.4.4.3	Keyboard and Mouse (Sun) UD71A3/UD71A4 Controls and Indicators	4–85
4.4.4.4	MSCF Dedicated–port Modem (Codex) UD71A5 Controls and Indicators	4–85
4.4.4.5	Backup Storage Device (Iomega Jaz) UD71A6 Controls and Indicators	4–85
4.4.4.6	Frame Relay Hub Router (Cisco 2621 XM) UD75	4–85
4.4.5	PRINTER UD79.	4–86
4.4.5.1	MSCF Color Printer (Xerox/Tektronix Phaser 750) UD79A1 Controls and Indicators	4–86
Section 4.5.	RPG Shutdown and Startup Procedures	4–150
4.5.1	INTRODUCTION	4–150
4.5.2	SHUTDOWN PROCEDURES	4–151
4.5.3	STARTUP PROCEDURES	4–155

Paragraph	Title	Page
4.5.3.1	Special Notes for RPG/MSCF Group Startup	4–155
4.5.3.1.1	Narrowband Communications	4–155
Section 4.6.	Unique Operating System Requirements/Programs	4–159
4.6.1	INTRODUCTION	4–159
4.6.2	STOPPING/STARTING APPLICATIONS SOFTWARE	4–162
4.6.2.1	Stopping the RPG Applications Software	4–163
4.6.2.2	Starting the RPG Applications Software	4–165
4.6.2.3	Stopping the MSCF Client Software	4–169
4.6.2.4	Starting the MSCF Client Software	4–169
4.6.2.5	Stopping the BDDS Software	4–171
4.6.2.6	Starting the BDDS Software	4–172
4.6.2.7	Stopping the PowerChute Display	4–174
4.6.2.8	Starting the PowerChute Display	4–175
4.6.3	SOFTWARE LOADS	4–176
4.6.3.1	Full System Software Installations	4–177
4.6.3.1.1	RPG Processor UD70A7 Full System Software Installation	4–177
4.6.3.1.2	BDDS Processor UD70A1 Full System Software Installation	4–187
4.6.3.1.3	MSCF Processor UD71A1 Full System Software Installation	4–194
4.6.3.2	Load of New RPG Applications Software	4–206
4.6.3.3	Load of New MSCF Applications Software	4–212
4.6.3.4	Load of New BDDS Applications Software	4–217
4.6.4	SOFTWARE BACKUPS	4–220
4.6.4.1	Type of Backups	4–220
4.6.4.2	RPG/MSCF/BDDS System Software Backup Using ufsdump (Example)	4–221
4.6.4.3	RPG Applications Software Backup	4–225
4.6.4.4	MSCF Applications Software Backup	4–227
4.6.4.5	Backup of User Account Directories	4–230
4.6.4.6	Adaptation Data Backups	4–237
4.6.5	SOFTWARE RESTORALS	4–239
4.6.5.1	System Software Restoral Using ufsrestore (Individual File Systems)	4–240
4.6.5.2	RPG Applications Software Restoral	4–244
4.6.5.3	MSCF Applications Software Restoral	4–247
4.6.5.4	Restoral of User Account Directories	4–249
4.6.5.5	Adaptation Data Restorals	4–258
4.6.6	MISCELLANEOUS LOAD/SETUP PROCEDURES	4–259
4.6.6.1	MSCF Dial Modem Setup	4–260
4.6.6.2	Jaz Drive Disk Format and Mount	4–261
4.6.6.3	Four/Eight Port Serial Card Driver Load	4–274
4.6.6.4	Date/Time Set Process	4–276
4.6.7	PROCESSOR SYSTEM REINITIALIZATION PROCEDURES	4–277
4.6.7.1	Normal Processor System Reinitialization Procedure	4–278

Paragraph	Title	Page
4.6.7.2	Abnormal Processor System Reinitialization Procedure	4–279
4.6.8	SYSTEM CLEANUP ACTIONS	4–281
4.6.8.1	Find and Clean Out Core Dumps	4–282
4.6.8.2	Clean Out Printer Queues	4–283
4.6.9	USE OF ADMINTOOL	4–284
4.6.9.1	Addition of Groups	4–284
4.6.9.2	Addition of Users	4–286
Section 4.7.	Unique MSCF Human Computer Interface Requirements	4–291
4.7.1	INTRODUCTION	4–292
4.7.2	MAIN MENU	4–293
4.7.2.1	Applications	4–294
4.7.2.1.1	Base Data Display	4–294
4.7.2.1.2	Clutter Regions	4–294
4.7.2.1.3	Bypass Map Editor	4–295
4.7.2.1.4	PRF (Pulse Repetition Frequency) Selection	4–295
4.7.2.1.5	RDA Performance Data	4–295
4.7.2.1.6	Console Messages	4–305
4.7.2.1.7	Environmental Data	4–307
4.7.2.1.8	HCI Properties	4–307
4.7.2.2	Tower/Radome Area	4–309
4.7.2.2.1	Alarm Area	4–309
4.7.2.2.2	System Status Line	4–311
4.7.2.2.3	VCP Button	4–311
4.7.2.2.4	Volume Status Line	4–312
4.7.2.2.5	VCP Elevation Angle Display	4–312
4.7.2.2.6	Antenna Azimuth Position Display	4–312
4.7.2.3	RDA Area	4–313
4.7.2.3.1	RDA Icon	4–313
4.7.2.3.2	Power Source	4–320
4.7.2.3.3	Archive Base Data	4–320
4.7.2.3.4	Starting/Stopping Base Data Recording	4–321
4.7.2.3.5	Archive Base Data Data Flow	4–322
4.7.2.4	RPG Area	4–322
4.7.2.4.1	RPG Icon	4–322
4.7.2.4.2	Archive Products	4–328
4.7.2.4.3	Archive Products Status Lines	4–331
4.7.2.4.4	Archive Products Data Flow	4–331
4.7.2.5	Wideband Area	4–331
4.7.2.5.1	Wideband Link Data Flow	4–332
4.7.2.5.2	Wideband Status	4–332
4.7.2.5.3	RDA/RPG Interface Control/Status	4–332

Paragraph	Title	Page
4.7.2.5.4	System Control Indicator	4–333
4.7.2.5.5	MLOS Button	4–333
4.7.2.6	Users Area	4–334
4.7.2.6.1	Users Icon	4–334
4.7.2.6.2	Comms	4–334
4.7.2.6.3	Products	4–340
4.7.2.6.4	Status	4–341
4.7.2.6.5	Narrowband Data Flow	4–341
4.7.2.7	Status Areas	4–342
4.7.2.7.1	Precip Cat	4–342
4.7.2.7.2	VAD Update	4–342
4.7.2.7.3	Auto PRF.	4–342
4.7.2.7.4	Calib	4–342
4.7.2.7.5	Load Shed	4–342
4.7.2.7.6	Audio Alarms	4–344
4.7.2.7.7	RDA Messages	4–344
4.7.2.7.8	Adapt Times	4–344
4.7.3	MSCF WINDOWS.	4–345
4.7.3.1	MSCF Display	4–345
4.7.3.1.1	MSCF FAA Channels Area	4–349
4.7.3.1.2	MSCF Comms Status Window	4–349
4.7.3.1.3	MSCF Power Control Window	4–350
4.7.3.1.4	MSCF RPG HCI	4–351
4.7.3.1.5	MSCF RDA HCI	4–351
4.7.3.1.6	MSCF Base Data Distribution Server HCI Window	4–351
4.7.4	SWITCHING BETWEEN REDUNDANT CHANNELS	4–352
4.7.4.1	NWS Redundant Systems	4–352
4.7.4.2	FAA Redundant Systems	4–352
4.7.4.2.1	Switching Between Channels At The Distant MSCF (FAA Redundant Systems Only)	4–357
Section 4.8.	Off–Line Diagnostic Tests	4–361
4.8.1	INTRODUCTION	4–361
4.8.2	SUN ULTRA 5/10 DIAGNOSTICS	4–362
4.8.2.1	General Information	4–362
4.8.2.2	Power On Self Test	4–362
4.8.2.2.1	POST Display Methods	4–363
4.8.2.2.2	POST Execution	4–363
4.8.2.2.3	POST Termination	4–371
4.8.2.3	Open Boot PROM Diagnostics	4–371
4.8.2.3.1	Stand–Alone Boot PROM Diagnostics	4–371
4.8.2.3.2	OBDiag Diagnostic Tool	4–373

Paragraph	Title	Page
4.8.3	PTI MPS800 COMMUNICATION SERVER LOOPBACK TESTS.	4–377
4.8.3.1	Connection of Loopback Cable(s)	4–378
4.8.3.2	Example Execution of Communication Server Loopback Tests	4–379
Section 4.9.	Emergency/Recovery Procedures	4–384
4.9.1	INTRODUCTION	4–384
4.9.2	SUN PROCESSOR RECOVERY PROCEDURES	4–385
4.9.2.1	Sun Processor Recovery (Non–Fatal Condition)	4–385
4.9.2.2	Sun Processor Recovery (Fatal Condition)	4–386
4.9.3	COMPONENT SOFTWARE REINITIALIZATION (REBOOT) PROCEDURES	4–387
4.9.3.1	Cisco 2924 LAN Switch Reinitialization	4–388
4.9.3.2	Cisco 3640 Router Reinitialization	4–388
4.9.3.3	APC MasterSwitch Power Administrator Reinitialization	4–389
4.9.3.4	Baytech RMS Power Administrator Reinitialization	4–390
4.9.3.5	PTI MPS800 Communication Server Reinitialization	4–391
4.9.4	COMPONENT POWER OFF/ON RESET PROCEDURES	4–391
4.9.4.1	MasterSwitch Power Administrator Power Control Using the MSCF Power Control Window	4–392
4.9.4.2	MasterSwitch Power Administrator Power Control Using telnet	4–393
4.9.4.3	MasterSwitch Power Administrator Power Control Using Out–Of–Bandwidth telnet	4–398
4.9.5	COMMUNICATION RECOVERY PROCEDURES	4–398
4.9.5.1	Narrowband Recovery Procedure	4–398
4.9.5.2	Wideband Recovery Procedure	4–399
CHAPTER 5	**THEORY OF OPERATION**	**5–1**
Section 5.1.	Introduction	5–1
5.1.1	INTRODUCTION	5–1
5.1.1.1	Simplified Functional Description – Section 5.2	5–1
5.1.1.2	LAN Switch – Section 5.3	5–1
5.1.1.3	Product Generation Processor – Section 5.4	5–1
5.1.1.4	RDA/RPG Gateway and Communications Server – Section 5.5	5–1
5.1.1.5	Narrowband Communications – Section 5.6	5–1
5.1.1.6	Relay Box – Section 5.7	5–1
5.1.1.7	BDDS – Section 5.8	5–1
5.1.1.8	MSCF – Section 5.9	5–1
5.1.1.9	Remote RDA Maintenance Terminal – Section 5.10	5–1
5.1.1.10	Power Distribution – Section 5.11	5–1
Section 5.2.	RPG Simplified Block Diagrams Description	5–2
5.2.1	MAJOR FUNCTIONS	5–2

Paragraph	Title	Page
5.2.1.1	LAN	5–2
5.2.1.2	Power Administration	5–2
5.2.1.3	Processing	5–2
5.2.1.4	Communications	5–2
5.2.1.5	BDDS Processor	5–2
5.2.1.6	MSCF	5–2
5.2.2	RPG SIMPLIFIED FUNCTIONAL FLOW DIAGRAMS	5–3
5.2.2.1	RPG Simplified Functional Flow Diagram (NWS)	5–3
5.2.2.2	RPG Simplified Functional Flow Diagram (DoD)	5–6
5.2.2.3	RPG Simplified Functional Flow Diagram (FAA Redundant)	5–9
Section 5.3.	LAN and Power Administration Functional Description	5–13
5.3.1	INTRODUCTION	5–13
5.3.2	GENERAL DESCRIPTION	5–13
5.3.3	LAN	5–13
5.3.3.1	LAN Switch UD70A13	5–13
5.3.3.2	Router UD70A2	5–15
5.3.3.2.1	DSU/CSU Module UD70A2A1A1W0	5–15
5.3.3.2.2	DSU/CSU Module UD70A2A1A1W1	5–16
5.3.4	POWER ADMINISTRATION	5–16
5.3.4.1	UPS UD70A11	5–16
5.3.4.2	Power Administrator UD70A10	5–16
5.3.4.3	FAA RMS Power Administrators UD70/170A28 and UD70/170A29	5–17
Section 5.4.	Product Generation Processor Functional Description	5–18
5.4.1	INTRODUCTION	5–18
5.4.2	GENERAL DESCRIPTION	5–19
5.4.3	CPU	5–20
5.4.4	MEMORY	5–20
5.4.5	INTERNAL BUS STRUCTURE	5–20
5.4.6	INTERNAL PERIPHERALS	5–21
5.4.7	I/O CONNECTORS AND EXTERNAL INTERCONNECTS	5–22
5.4.8	PCI CARDS AND EXTERNAL BUSSES/INTERCONNECTS	5–22
5.4.9	SERIAL INTERCONNECT FUNCTIONALITY	5–23
5.4.10	KVM SWITCH	5–26
5.4.11	RPG/RPG INTERPROCESSOR LINK	5–26
5.4.11.1	Redundant Task Manager	5–26
5.4.11.2	Channel Status and Control	5–26
Section 5.5.	RDA/RPG Gateway and Communication Server Functional Descriptions	5–28
5.5.1	INTRODUCTION	5–28

Paragraph	Title	Page
5.5.2	GENERAL DESCRIPTION	5–28
5.5.3	WIDEBAND LINK	5–28
5.5.3.1	HDLC Format	5–28
5.5.3.2	RDA/RPG Gateway UD70A12	5–30
5.5.3.2.1	Gateway CSU/DSU Functionality	5–30
5.5.3.2.2	Gateway Protocol Translation Functionality	5–30
5.5.3.3	CSU UD70A18 (NWS Only)	5–30
5.5.4	COMMUNICATION SERVERS UD70A15, A16, OR A17	5–31
5.5.4.1	Ethernet Interface	5–31
5.5.4.2	Processors/Communication Controllers	5–31
5.5.4.2.1	Master QUICC	5–32
5.5.4.2.2	Slave QUICC	5–32
5.5.4.2.3	Internal Busses	5–32
5.5.4.3	Memory	5–32
5.5.4.4	Line Drivers/Serial Ports	5–33
5.5.4.5	Front/Rear Panel Indicators	5–33
5.5.5	COMMUNICATION SERVERS NARROWBAND PROCESSING	5–34
Section 5.6.	Narrowband Communications Functional Description	5–35
5.6.1	INTRODUCTION	5–35
5.6.2	GENERAL DESCRIPTION	5–35
5.6.3	BASIC MODEM THEORY	5–36
5.6.3.1	Modem Transmission	5–36
5.6.3.2	Modem Reception	5–36
5.6.3.3	ACU	5–37
5.6.3.4	Phone Lines	5–37
5.6.3.5	Full or Half Duplex Transmission Modes	5–37
5.6.3.6	Asynchronous and Synchronous Serial Data Transmission	5–38
5.6.4	PRINCIPAL USER CONNECTIONS IN RPG (NWS and DoD)	5–38
5.6.4.1	RS–232/RS–422 Converter UD70A20	5–42
5.6.4.2	Modem Rack UD70A14	5–43
5.6.4.3	Dial Lines	5–43
5.6.4.3.1	Dial Line Interfaces	5–43
5.6.4.4	Dedicated Lines	5–43
5.6.4.4.1	Dedicated Line Interface	5–43
5.6.4.5	Telephone Demarcation	5–44
5.6.5	PRINCIPAL USER CONNECTIONS IN RPG (FAA REDUNDANT)	5–44
5.6.5.1	Modem Rack UD70/170A14	5–46
5.6.5.2	Dial Lines	5–46
5.6.5.2.1	Dial Line Interfaces	5–47
5.6.5.3	Dedicated Lines	5–47
5.6.5.3.1	Dedicated Line Interface	5–47

Paragraph	Title	Page
Section 5.7.	Relay Box Functional Description	5–48
5.7.1	INTRODUCTION	5–48
5.7.2	GENERAL DESCRIPTION	5–48
5.7.3	RELAYS K1 THROUGH K60	5–48
5.7.4	RELAY DRIVERS CIRCUIT BOARD ASSEMBLIES UD31A1 AND A2	5–49
5.7.5	FEEDBACK CONTROL RELAY K55	5–49
5.7.5.1	Telephone Demarcation	5–49
Section 5.8.	Base Data Distribution Server Functional Description	5–51
5.8.1	INTRODUCTION	5–51
5.8.2	GENERAL DESCRIPTION	5–51
5.8.3	CPU	5–52
5.8.4	MEMORY	5–52
5.8.5	INTERNAL BUS STRUCTURE	5–52
5.8.6	INTERNAL PERIPHERALS	5–53
5.8.7	I/O CONNECTORS AND EXTERNAL INTERCONNECTS	5–54
5.8.8	PCI CARDS AND EXTERNAL BUSSES/INTERCONNECTS	5–55
5.8.9	SERIAL INTERCONNECT FUNCTIONALITY	5–55
Section 5.9.	Master System Control Function Workstation Functional Description	5–56
5.9.1	INTRODUCTION	5–56
5.9.2	GENERAL DESCRIPTION	5–56
5.9.3	CPU	5–57
5.9.4	MEMORY	5–57
5.9.5	INTERNAL BUS STRUCTURE	5–57
5.9.6	INTERNAL PERIPHERALS	5–59
5.9.7	I/O CONNECTORS AND EXTERNAL INTERCONNECTS	5–59
5.9.8	PCI CARDS AND EXTERNAL BUSSES/INTERCONNECTS	5–60
5.9.9	SERIAL INTERCONNECT FUNCTIONALITY	5–60
Section 5.10.	Remote RDA Maintenance Terminal Functional Description	5–61
5.10.1	INTRODUCTION	5–61
5.10.2	REMOTE RDA MAINTENANCE TERMINAL MONITOR UD32A10	5–61
5.10.3	DUAL A/B SWITCH UD32A2	5–61
5.10.4	STATMUX UD32A3	5–61
5.10.5	DIAL–PORT MODEM UD32A4	5–62
Section 5.11.	Power Distribution	5–63
5.11.1	INTRODUCTION	5–63

Paragraph	Title	Page
5.11.2	MSCF GROUP ASSEMBLY POWER DISTRIBUTION	5–63
5.11.2.1	MSCF Printer Assembly	5–63
5.11.2.2	MSCF Workstation Assembly	5–63
5.11.3	NWS REDUNDANT SYSTEMS REMOTE RDA MAINTENANCE TERMINAL POWER DISTRIBUTION	5–64
5.11.4	RPGPCA CABINET POWER DISTRIBUTION (NWS AND DoD)	5–64
5.11.4.1	AC Line Filter and Power Distribution Unit	5–64
5.11.4.2	UPS	5–64
5.11.4.3	MasterSwitch Power Administrator	5–65
5.11.4.4	Power Strip J23	5–65
5.11.5	RPGPCA CABINET POWER DISTRIBUTION (FAA REDUNDANT)	5–65
5.11.5.1	AC Line Filter and Power Distribution Unit	5–66
5.11.5.2	UPS	5–66
5.11.5.3	MasterSwitch Power Administrator	5–66
5.11.5.4	Baytech RMS Power Administrators	5–67
5.11.5.5	Power Strip J23	5–67
CHAPTER 6	**MAINTENANCE**	**6–1**
Section 6.1.	Introduction	6–1
6.1.1	GENERAL	6–1
6.1.1.1	Maintenance Concept	6–1
6.1.1.2	On–Line Status and Performance Monitoring	6–2
6.1.1.3	Recovery Procedures	6–2
6.1.1.4	FAA Redundant System	6–2
6.1.2	PREVENTIVE MAINTENANCE PROCEDURES	6–2
6.1.3	PRIMARY FAULT ISOLATION AND OPERATIONAL CHECKS	6–3
6.1.4	SECONDARY FAULT ISOLATION	6–3
6.1.5	CORRECTIVE MAINTENANCE	6–3
6.1.6	ALIGNMENTS AND ADJUSTMENTS	6–3
6.1.7	COMPONENT LOCATION AND IDENTIFICATION	6–3
6.1.8	USE OF COMMERCIAL MANUALS	6–4
6.1.9	TOOLS, TEST EQUIPMENT AND CONSUMABLES	6–4
6.1.10	SYSTEM STARTUP AND SHUTDOWN PROCEDURES	6–4
6.1.11	DIAGNOSTIC TEST PROGRAM PROCEDURES	6–4
Section 6.2.	Preventive Maintenance	6–5
6.2.1	INTRODUCTION	6–5
Section 6.3.	Primary Fault Isolation	6–6
6.3.1	INTRODUCTION	6–6

Paragraph	Title	Page
6.3.2	FAULT ISOLATION FLOWCHARTS	6–6
6.3.2.1	System Fault Isolation Flowchart	6–6
6.3.2.2	RPG Fault Isolation Flowcharts	6–6
6.3.2.3	Operability Test	6–6
6.3.2.4	Quick Reference Chart	6–6
6.3.2.5	Flowchart Comments	6–7
6.3.2.6	Flowchart Notesheets	6–7
6.3.2.7	Secondary Fault Isolation	6–7
6.3.2.8	Flowchart Symbol Convention	6–7
6.3.2.9	Narrowband Configuration	6–7
6.3.2.10	Cabling and Connector Problems	6–10
6.3.3	FLOWCHART NOTES	6–10
6.3.4	PRIMARY FAULT ISOLATION FLOWCHARTS	6–10
Section 6.4.	Secondary Fault Isolation	6–189
6.4.1	INTRODUCTION	6–189
6.4.2	RPG1	6–189
6.4.3	RPG2	6–190
6.4.4	RPG3	6–191
6.4.5	RPG4	6–192
6.4.6	RPG5	6–192
6.4.7	RPG6	6–193
6.4.8	RPG7	6–193
6.4.9	RPG8	6–196
6.4.10	RPG9	6–200
6.4.11	RPG10	6–200
6.4.12	RPG11	6–202
6.4.13	RPG12	6–204
Section 6.5.	Replacement Procedures	6–206
6.5.1	INTRODUCTION	6–206
6.5.1.1	Printed Circuit Cards	6–206
6.5.1.2	Universal Communication Devices	6–206
6.5.2	SPECIAL CONSIDERATIONS FOR REPLACEMENT PROCEDURES	6–209
6.5.2.1	Safety	6–209
6.5.2.2	Software Shutdown	6–209
6.5.2.3	Power Turn–off	6–210
6.5.2.4	Labeling	6–210
6.5.2.5	Inspection	6–210
6.5.2.6	Related Procedures	6–210
6.5.2.7	Handling of Electrostatic Sensitive Devices	6–210

Paragraph	Title	Page
6.5.2.7.1	Internal Component Removal/Installation	6–210
6.5.2.7.2	ESD DIP Switch Setting	6–210
6.5.3	RELAY DRIVER CIRCUITS UD31A1, A2 REPLACEMENT PROCEDURE	6–211
6.5.3.1	Equipment and Tools Required	6–211
6.5.3.2	Initial Conditions/Preliminary Setup	6–211
6.5.3.3	Replacement Procedure	6–211
6.5.4	RELAY BOX RELAYS UD31K1–K60 REPLACEMENT PROCEDURE	6–213
6.5.4.1	Equipment and Tools Required	6–213
6.5.4.2	Initial Conditions/Preliminary Setup	6–213
6.5.4.3	Replacement Procedure	6–213
6.5.5	REMOTE RDA MAINTENANCE TERMINAL CPU UD32A9/ MONITOR UD32A10 REPLACEMENT PROCEDURE	6–213
6.5.5.1	Equipment and Tools Required	6–213
6.5.5.2	Initial Conditions/Preliminary Setup	6–213
6.5.5.3	Replacement Procedure	6–214
6.5.5.4	Terminal Setup Configuration Procedure	6–215
6.5.6	REMOTE RDA MAINTENANCE TERMINAL DUAL A/B SWITCH UD32A2 REPLACEMENT PROCEDURE	6–221
6.5.6.1	Equipment and Tools Required	6–221
6.5.6.2	Initial Conditions/Preliminary Setup	6–221
6.5.6.3	Replacement Procedure	6–221
6.5.7	REMOTE RDA MAINTENANCE TERMINAL STATMUX UD32A3 (PENRIL VCX–150) REPLACEMENT PROCEDURE	6–221
6.5.7.1	Equipment and Tools Required	6–221
6.5.7.2	Initial Conditions/Preliminary Setup	6–221
6.5.7.3	Replacement Procedure	6–221
6.5.8	REMOTE RDA MAINTENANCE TERMINAL STAND–ALONE DIAL PORT MODEM (CODEX 326x) UD32A4 REPLACEMENT PROCEDURE	6–222
6.5.8.1	Equipment and Tools Required	6–222
6.5.8.2	Initial Conditions/Preliminary Setup	6–222
6.5.8.3	Replacement Procedure	6–222
6.5.9	BDDS PROCESSOR ASSEMBLY (SUN ULTRA 5) UD70A1 REPLACEMENT PROCEDURE	6–223
6.5.9.1	Equipment and Tools Required	6–223
6.5.9.2	Initial Conditions/Preliminary Setup	6–223
6.5.9.3	Replacement Procedure	6–225
6.5.10	ROUTER ASSEMBLY (CISCO 3640) UD70A2 REPLACEMENT PROCEDURE	6–226
6.5.10.1	Equipment and Tools Required	6–226
6.5.10.2	Initial Conditions/Preliminary Setup	6–226
6.5.10.3	Replacement Procedure	6–226

Paragraph	Title	Page
6.5.11	KVM SWITCH (RARITAN SMX18) UD70A3 REPLACEMENT PROCEDURE	6–228
6.5.11.1	Equipment and Tools Required	6–228
6.5.11.2	Initial Conditions/Preliminary Setup	6–228
6.5.11.3	Replacement Procedure	6–229
6.5.12	RPG 17–INCH MONITOR (SUN) UD70A4 REPLACEMENT PROCEDURE	6–231
6.5.12.1	Equipment and Tools Required	6–231
6.5.12.2	Initial Conditions/Preliminary Setup	6–231
6.5.12.3	Replacement Procedure	6–231
6.5.13	RPG KEYBOARD (SUN) UD70A5 REPLACEMENT PROCEDURE	6–232
6.5.13.1	Equipment and Tools Required	6–232
6.5.13.2	Initial Conditions/Preliminary Setup	6–232
6.5.13.3	Replacement Procedure	6–233
6.5.14	RPG MOUSE (SUN) UD70A6 REPLACEMENT PROCEDURE	6–233
6.5.14.1	Equipment and Tools Required	6–233
6.5.14.2	Initial Conditions/Preliminary Setup	6–233
6.5.14.3	Replacement Procedure	6–234
6.5.15	RPG PROCESSOR ASSEMBLY (SUN ULTRA 10) UD70A7 REPLACEMENT PROCEDURE	6–234
6.5.15.1	Equipment and Tools Required	6–234
6.5.15.2	Initial Conditions/Preliminary Setup	6–234
6.5.15.3	Replacement Procedure	6–235
6.5.16	FLOPPY DRIVE (SUN ULTRA 10) UD70A7A1A2 REPLACEMENT PROCEDURE	6–237
6.5.16.1	Equipment and Tools Required	6–237
6.5.16.2	Initial Conditions/Preliminary Setup	6–237
6.5.16.3	Replacement Procedure	6–240
6.5.17	CD–ROM DRIVE (SUN ULTRA 10) UD70A7A1A3 REPLACEMENT PROCEDURE	6–243
6.5.17.1	Equipment and Tools Required	6–243
6.5.17.2	Initial Conditions/Preliminary Setup	6–243
6.5.17.3	Replacement Procedure	6–244
6.5.18	HARD DISK (SUN ULTRA 10) UD70A7A1A4 REPLACEMENT PROCEDURE	6–247
6.5.18.1	Equipment and Tools Required	6–247
6.5.18.2	Initial Conditions/Preliminary Setup	6–247
6.5.18.3	Replacement Procedure	6–248
6.5.19	ARCHIVE STORAGE DEVICE (IOMEGA JAZ) UD70A8 AND UD70A9 REPLACEMENT PROCEDURE	6–251
6.5.19.1	Equipment and Tools Required	6–251
6.5.19.2	Initial Conditions/Preliminary Setup	6–251
6.5.19.3	Replacement Procedure	6–253
6.5.20	POWER ADMINISTRATOR UNIT (APC MASTERSWITCH) UD70A10 REPLACEMENT PROCEDURE	6–254

Paragraph	Title	Page
6.5.20.1	Equipment and Tools Required	6–254
6.5.20.2	Initial Conditions/Preliminary Setup	6–254
6.5.20.3	Replacement Procedure	6–256
6.5.21	UPS ASSEMBLY (APC 1400) UD70A11 REPLACEMENT PROCEDURE	6–257
6.5.21.1	Equipment and Tools Required	6–258
6.5.21.2	Initial Conditions/Preliminary Setup	6–258
6.5.21.3	Replacement Procedure	6–259
6.5.22	UPS AP9606 WEB/SNMP MANAGEMENT CARD (LAN INTERFACE MODULE) UD70A11A2 REPLACEMENT PROCEDURE	6–261
6.5.22.1	Equipment and Tools Required	6–261
6.5.22.2	Initial Conditions/Preliminary Setup	6–261
6.5.22.3	Replacement Procedure	6–263
6.5.23	UPS BATTERY MODULE (APC RPC24) UD70A11A1BT1 REPLACEMENT PROCEDURE	6–265
6.5.23.1	Equipment and Tools Required	6–265
6.5.23.2	Initial Conditions/Preliminary Setup	6–265
6.5.23.3	Replacement Procedure	6–265
6.5.24	RDA/RPG GATEWAY (POLYCOM 505–0081) UD70A12 REPLACEMENT PROCEDURE	6–266
6.5.24.1	Equipment and Tools Required	6–266
6.5.24.2	Initial Conditions/Preliminary Setup	6–266
6.5.24.3	Replacement Procedure	6–266
6.5.25	LAN SWITCH (CISCO 2924) UD70A13 REPLACEMENT PROCEDURE	6–267
6.5.25.1	Equipment and Tools Required	6–267
6.5.25.2	Initial Conditions/Preliminary Setup	6–267
6.5.25.3	Replacement Procedure	6–267
6.5.26	DIAL AND DEDICATED PORT (RACK–MOUNTED) MODEM (CODEX 3262 AND 3263) UD70A14A1–A21 REPLACEMENT	6–269
6.5.26.1	Equipment and Tools Required	6–270
6.5.26.2	Initial Conditions/Preliminary Setup	6–270
6.5.26.3	Replacement Procedure	6–270
6.5.27	DEDICATED/DIAL MODEM RACK (CODEX 326x) UD70A14PS1, PS2, POWER SUPPLY/FAN MODULE UD70A14B1 ASSEMBLIES REPLACEMENT	6–274
6.5.27.1	Equipment and Tools Required	6–274
6.5.27.2	Initial Conditions/Preliminary Setup	6–274
6.5.27.3	Replacement Procedure	6–275
6.5.28	COMMUNICATION SERVER A, B, AND C (PTI MPS 800) UD70A15, UD70A16, UD70A17 REPLACEMENT PROCEDURE	6–278
6.5.28.1	Equipment and Tools Required	6–278
6.5.28.2	Initial Conditions/Preliminary Setup	6–278

Paragraph	Title	Page
6.5.28.3	Replacement Procedure	6–278
6.5.29	CSU UD70A18 REPLACEMENT PROCEDURE	6–280
6.5.29.1	Equipment and Tools Required	6–280
6.5.29.2	Initial Conditions/Preliminary Setup	6–280
6.5.29.3	Replacement Procedure	6–281
6.5.30	SHORT HAUL MODEM UD70A19 REPLACEMENT PROCEDURE	6–282
6.5.30.1	Equipment and Tools Required	6–282
6.5.30.2	Initial Conditions/Preliminary Setup	6–282
6.5.30.3	Replacement Procedure	6–283
6.5.31	RS–232/RS–422 CONVERTER (STAND–ALONE) UD70A20 REPLACEMENT PROCEDURE	6–283
6.5.31.1	Equipment and Tools Required	6–283
6.5.31.2	Initial Conditions/Preliminary Setup	6–283
6.5.31.3	Replacement Procedure	6–284
6.5.32	AC POWER DISTRIBUTION PANEL UD70A22 REPLACEMENT PROCEDURE	6–285
6.5.32.1	Equipment and Tools Required	6–285
6.5.32.2	Initial Conditions/Preliminary Setup	6–285
6.5.32.3	Replacement Procedure	6–287
6.5.33	DIAL PATCH PANEL UD70A23 REPLACEMENT PROCEDURE	6–288
6.5.33.1	Equipment and Tools Required	6–288
6.5.33.2	Initial Conditions/Preliminary Setup	6–288
6.5.33.3	Replacement Procedure	6–289
6.5.34	DIAL ADAPTER PANEL UD70A24 REPLACEMENT PROCEDURE	6–289
6.5.34.1	Equipment and Tools Required	6–289
6.5.34.2	Initial Conditions/Preliminary Setup	6–289
6.5.34.3	Replacement Procedure	6–289
6.5.35	DEDICATED ADAPTER PANEL UD70A25 REPLACEMENT PROCEDURE	6–289
6.5.35.1	Equipment and Tools Required	6–289
6.5.35.2	Initial Conditions/Preliminary Setup	6–289
6.5.35.3	Replacement Procedure	6–290
6.5.36	DEDICATED PATCH PANEL UD70A26 REPLACEMENT PROCEDURE	6–290
6.5.36.1	Equipment and Tools Required	6–290
6.5.36.2	Initial Conditions/Preliminary Setup	6–290
6.5.36.3	Replacement Procedure	6–290
6.5.37	DEDICATED PATCH PANEL UD70A27 REPLACEMENT PROCEDURE	6–290
6.5.37.1	Equipment and Tools Required	6–290
6.5.37.2	Initial Conditions/Preliminary Setup	6–290
6.5.37.3	Replacement Procedure	6–291
6.5.38	RMS POWER ADMINISTRATOR A AND B (BAYTECH) UD70/170A28, UD70/170A29 REPLACEMENT PROCEDURE	6–291

Paragraph	Title	Page
6.5.38.1	Equipment and Tools Required	6–291
6.5.38.2	Initial Conditions/Preliminary Setup	6–291
6.5.38.3	Replacement Procedure	6–292
6.5.39	POWER FILTER UD70FL1 REPLACEMENT PROCEDURE	6–294
6.5.39.1	Equipment and Tools Required	6–294
6.5.39.2	Initial Conditions/Preliminary Setup	6–294
6.5.39.3	Replacement Procedure	6–296
6.5.40	RELAY BOX POWER SUPPLY UD70PS1 REPLACEMENT PROCEDURE	6–297
6.5.40.1	Equipment and Tools Required	6–297
6.5.40.2	Initial Conditions/Preliminary Setup	6–297
6.5.40.3	Replacement Procedure	6–297
6.5.41	MSCF PROCESSOR ASSEMBLY (SUN ULTRA 5) UD71A1 REPLACEMENT PROCEDURE	6–298
6.5.41.1	Equipment and Tools Required	6–298
6.5.41.2	Initial Conditions/Preliminary Setup	6–298
6.5.41.3	Replacement Procedure	6–299
6.5.42	FLOPPY DRIVE (SUN ULTRA 5) UD70A1A1A2 AND UD71A1A1A2 REPLACEMENT PROCEDURE	6–300
6.5.42.1	Equipment and Tools Required	6–300
6.5.42.2	Initial Conditions/Preliminary Setup	6–300
6.5.42.3	Replacement Procedure	6–300
6.5.43	CD–ROM DRIVE (SUN ULTRA 5) UD70A1A1A3 AND UD71A1A1A3 REPLACEMENT PROCEDURE	6–305
6.5.43.1	Equipment and Tools Required	6–305
6.5.43.2	Initial Conditions/Preliminary Setup	6–305
6.5.43.3	Replacement Procedure	6–305
6.5.44	HARD DISK (SUN ULTRA 5) UD70A1A1A4 AND UD71A1A1A4 REPLACEMENT PROCEDURE	6–309
6.5.44.1	Equipment and Tools Required	6–309
6.5.44.2	Initial Conditions/Preliminary Setup	6–310
6.5.44.3	Replacement Procedure	6–310
6.5.45	MSCF 21–INCH MONITOR (SUN) UD71A2 REPLACEMENT PROCEDURE	6–314
6.5.45.1	Equipment and Tools Required	6–314
6.5.45.2	Initial Conditions/Preliminary Setup	6–314
6.5.45.3	Replacement Procedure	6–314
6.5.46	MSCF KEYBOARD (SUN) UD71A3 REPLACEMENT PROCEDURE	6–314
6.5.46.1	Equipment and Tools Required	6–314
6.5.46.2	Initial Conditions/Preliminary Setup	6–315
6.5.46.3	Replacement Procedure	6–315
6.5.47	MSCF MOUSE (SUN) UD71A4 REPLACEMENT PROCEDURE	6–315
6.5.47.1	Equipment and Tools Required	6–315
6.5.47.2	Initial Conditions/Preliminary Setup	6–315

Paragraph	Title	Page
6.5.47.3	Replacement Procedure	6–315
6.5.48	MSCF STAND ALONE MODEM (CODEX 3261 FAST) UD71A5 REPLACEMENT PROCEDURE	6–316
6.5.48.1	Equipment and Tools Required	6–316
6.5.48.2	Initial Conditions/Preliminary Setup	6–316
6.5.48.3	Replacement Procedure	6–316
6.5.49	MSCF BACKUP STORAGE DEVICE (IOMEGA JAZ) UD71A6 REPLACEMENT PROCEDURE	6–317
6.5.49.1	Equipment and Tools Required	6–317
6.5.49.2	Initial Conditions/Preliminary Setup	6–317
6.5.49.3	Replacement Procedure	6–317
6.5.50	MSCF SURGE SUPPRESSOR UD71E1 REPLACEMENT PROCEDURE	6–318
6.5.50.1	Equipment and Tools Required	6–318
6.5.50.2	Initial Conditions/Preliminary Setup	6–318
6.5.50.3	Replacement Procedure	6–318
6.5.51	FRAME RELAY HUB ROUTER ASSEMBLY (CISCO 2621XM) UD75 REPLACEMENT PROCEDURE	6–319
6.5.51.1	Equipment and Tools Required	6–319
6.5.51.2	Initial Conditions/Preliminary Setup	6–319
6.5.51.3	Replacement Procedure	6–320
6.5.52	MSCF COLOR PRINTER (XEROX/TEKTRONIX PHASER 750) UD79A1 REPLACEMENT PROCEDURE	6–321
6.5.52.1	Equipment and Tools Required	6–321
6.5.52.2	Initial Conditions/Preliminary Setup	6–321
6.5.52.3	Replacement Procedure	6–321
Section 6.6.	Setup Procedures	6–325
6.6.1	INTRODUCTION	6–325
6.6.2	STATMUX UD32A3 (PENRIL VCX–150) SETUP PROCEDURE	6–327
6.6.2.1	Equipment and Tools Required	6–327
6.6.2.2	Initial Conditions/Preliminary Setup	6–327
6.6.2.3	Procedure	6–328
6.6.3	DIAL–IN MODEM UD32A4 (CODEX 3260) – 14400/ASYNC SETUP PROCEDURE	6–337
6.6.3.1	Equipment and Tools Required	6–337
6.6.3.2	Initial Conditions/Preliminary Setup	6–337
6.6.3.3	Procedure	6–338
6.6.3.3.1	Modem Password Confirmation Procedure	6–338
6.6.3.3.2	Setup Procedure	6–338
6.6.4	BDDS PROCESSOR ASSEMBLY (SUN ULTRA 5) UD70A1 SETUP PROCEDURE	6–342
6.6.4.1	Equipment and Tools Required	6–342

Paragraph	Title	Page
6.6.4.2	Initial Conditions/Preliminary Setup	6–342
6.6.4.3	Procedure	6–343
6.6.5	ROUTER ASSEMBLY (CISCO 3640) UD70A2 SETUP PROCEDURE	6–343
6.6.5.1	Equipment and Tools Required	6–343
6.6.5.2	Initial Conditions/Preliminary Setup	6–343
6.6.5.3	Router Configuration Procedure	6–344
6.6.6	KVM SWITCH (RARITAN SMX18) UD70A3 SETUP PROCEDURE	6–352
6.6.6.1	Equipment and Tools Required	6–352
6.6.6.2	Initial Conditions/Preliminary Setup	6–352
6.6.6.3	Procedure	6–352
6.6.7	RPG PROCESSOR ASSEMBLY (SUN ULTRA 10) UD70A7 SETUP PROCEDURE	6–354
6.6.7.1	Equipment and Tools Required	6–354
6.6.7.2	Initial Conditions/Preliminary Setup	6–354
6.6.7.3	Procedure	6–354
6.6.8	POWER ADMINISTRATOR (APC MASTERSWITCH) UD70A10 SETUP PROCEDURE	6–355
6.6.8.1	Equipment and Tools Required	6–355
6.6.8.2	Initial Conditions/Preliminary Setup	6–356
6.6.8.3	Procedure	6–356
6.6.8.3.1	Power Administrator and Laptop Computer Setup	6–356
6.6.8.3.2	Primary Power Administrator and RPGPCA Setup	6–357
6.6.8.3.3	Alternate Power Administrator and RPGPCA Setup	6–358
6.6.8.3.4	Power Administrator Configuration Procedure	6–359
6.6.9	UPS ASSEMBLY (APC) UD70A11 SETUP PROCEDURE	6–367
6.6.9.1	Equipment and Tools Required	6–367
6.6.9.2	Initial Conditions/Preliminary Setup	6–367
6.6.9.3	Procedure	6–367
6.6.9.3.1	UPS and Laptop Computer Setup	6–367
6.6.9.3.2	UPS and RPGPCA Setup	6–369
6.6.9.3.3	UPS Configuration Procedure	6–370
6.6.10	LAN SWITCH (CISCO 2924) UD70A13 SETUP PROCEDURE	6–375
6.6.10.1	Equipment and Tools Required	6–375
6.6.10.2	Initial Conditions/Preliminary Setup	6–375
6.6.10.3	LAN Switch Configuration Procedure	6–375
6.6.11	X.25 DIAL–IN MODEM (CODEX 3262) – 14400/SYNC SETUP PROCEDURE. APPLIES TO UD70/170A14A1 – A3A	6–382
6.6.11.1	Equipment and Tools Required	6–382
6.6.11.2	Initial Conditions/Preliminary Setup	6–382
6.6.11.3	Procedure	6–383
6.6.12	TCP OPUP DIAL–IN MODEM (CODEX 3262) – PPP 14400/ASYNC SETUP PROCEDURE. APPLIES TO UD70/170A3B – A4B	6–389
6.6.12.1	Equipment and Tools Required	6–389

Paragraph	Title	Page
6.6.12.2	Initial Conditions/Preliminary Setup	6–389
6.6.12.3	Procedure	6–390
6.6.13	X.25 AWIPS DEDICATED MODEM (CODEX 3263) – 33600 SDC/ SYNC SETUP PROCEDURE. APPLIES TO DoD/FAA ONLY UD70/170A5, DOVER AFB UD70A6, AND COLUMBUS AFB UD70A14	6–398
6.6.13.1	Equipment and Tools Required	6–398
6.6.13.2	Initial Conditions/Preliminary Setup	6–398
6.6.13.3	Procedure	6–399
6.6.14	X.25 DEDICATED MODEM (CODEX 3263) – 14400/SYNC SETUP PROCEDURE. DEFAULT SETUP FOR UD70/170A6 – A16	6–410
6.6.14.1	Equipment and Tools Required	6–410
6.6.14.2	Initial Conditions/Preliminary Setup	6–410
6.6.14.3	Procedure	6–411
6.6.15	X.25 ITWS DEDICATED MODEM (CODEX 3263) – 33600/SYNC SETUP PROCEDURE. APPLIES FOR ONE TO THREE MODEMS IN LOCATIONS UD70/170A14A6 – A16 (SITE DEPENDENT)	6–416
6.6.15.1	Equipment and Tools Required	6–416
6.6.15.2	Initial Conditions/Preliminary Setup	6–416
6.6.15.3	Procedure	6–417
6.6.16	TCP OPUP DEDICATED MODEM (CODEX 3263) – PPP 14400/ ASYNC SETUP PROCEDURE. APPLIES TO UD70/170A17 – A20 FOR DOD/FAA/NWS AND UD70A21 FOR NWS ONLY	6–422
6.6.16.1	Equipment and Tools Required	6–422
6.6.16.2	Initial Conditions/Preliminary Setup	6–422
6.6.16.3	Procedure	6–423
6.6.17	MSCF DEDICATED MODEM UD70/170A21 (CODEX 3263) – 33600/ ASYNC SETUP PROCEDURE. APPLIES TO FAA AND DOD ONLY	6–428
6.6.17.1	Equipment and Tools Required	6–428
6.6.17.2	Initial Conditions/Preliminary Setup	6–429
6.6.17.3	Procedure	6–429
6.6.18	COMMUNICATION SERVER (PTI MPS 800) UD70A15, UD70A16, UD70A17 SETUP PROCEDURE	6–435
6.6.18.1	Equipment and Tools Required	6–435
6.6.18.2	Initial Conditions/Preliminary Setup	6–435
6.6.18.3	Communication Server Configuration Procedure	6–436
6.6.19	RMS POWER ADMINISTRATOR (BAYTECH RPC–5) A UD70/170A28 AND B UD70/170A29 SETUP PROCEDURE	6–438
6.6.19.1	Equipment and Tools Required	6–439
6.6.19.2	Initial Conditions/Preliminary Setup	6–439
6.6.19.3	Procedure	6–439
6.6.19.3.1	RMS Power Administrator and Laptop Computer Setup	6–439
6.6.19.3.2	RMS Power Administrator and RPGPCA Setup	6–441
6.6.19.3.3	RMS Power Administrator Configuration Procedure	6–442

Paragraph	Title	Page
6.6.20	MSCF PROCESSOR ASSEMBLY (SUN ULTRA 5) UD71A1 SETUP PROCEDURE	6–445
6.6.20.1	Equipment and Tools Required	6–445
6.6.20.2	Initial Conditions/Preliminary Setup	6–445
6.6.20.3	Procedure	6–445
6.6.21	MSCF STAND–ALONE DEDICATED PORT MODEM (CODEX 3261 FAST) UD71A5 SETUP PROCEDURE	6–446
6.6.21.1	Equipment and Tools Required	6–446
6.6.21.2	Initial Conditions/Preliminary Setup	6–446
6.6.21.3	Procedure	6–447
6.6.22	FRAME RELAY HUB ROUTER ASSEMBLY (CISCO 2621XM) UD75 SETUP PROCEDURE	6–454
6.6.22.1	Equipment and Tools Required	6–454
6.6.22.2	Initial Conditions/Preliminary Setup	6–454
6.6.22.3	Procedure	6–454
6.6.22.3.1	Frame Relay Hub Router and Laptop Computer Setup	6–454
6.6.22.3.2	Frame Relay Hub Router and Distant MSCF Sun Processor Setup	6–456
6.6.22.3.3	Frame Relay Hub Router Configuration Procedure	6–457
6.6.23	MSCF COLOR PRINTER (XEROX/TEKTRONIX PHASER 750) UD79A1 SETUP PROCEDURE	6–463
6.6.23.1	Equipment and Tools Required	6–463
6.6.23.2	Initial Conditions/Preliminary Setup	6–463
6.6.23.3	Procedure	6–463
CHAPTER 7	**REFERENCE DATA**	**7–1**
Section 7.1.	Introduction, Systems Interface and Interconnection Cabling Diagrams (ICDs)	7–1
7.1.1	GENERAL	7–1
7.1.2	CHAPTER ORGANIZATION	7–1
7.1.3	INTERCONNECTION CABLING DIAGRAMS	7–1
Section 7.2.	Cable Wiring Data	7–3
7.2.1	GENERAL	7–3
Section 7.3.	UD70/170 Communication ICD Tables	7–98
7.3.1	COMMUNICATION SERVER (OR ROUTER SERIAL CARD)/ MODEM RACK/ADAPTER PANEL INTERCONNECTIVITY	7–98

LIST OF ILLUSTRATIONS

Figure	Title	Page
Figure 1–1.	RPG and MSCF Group Equipment Relationship	1–4
Figure 1–2.	Wideband Communications Group	1–5
Figure 1–3.	RPG Processor/Communications Assembly Cabinet UD70 (Front View) (2 Sheets)	1–19
Figure 1–4.	Remote RDA Maintenance Terminal UD32 (NWS Redundant) Component Location	1–22
Figure 1–5.	MSCF Group Component Location	1–25
Figure 4–1.	CDE Front Panel	4–5
Figure 4–2.	RPG Control/Status Window	4–9
Figure 4–3.	Warning_popup Window	4–11
Figure 4–4.	Password Window	4–12
Figure 4–5.	Change Passwords Window	4–13
Figure 4–6.	RPG HCI Window Menu Controls	4–16
Figure 4–7.	Occupy Workspace Dialog Box	4–16
Figure 4–8.	Workspace Menu	4–18
Figure 4–9.	CDE Login Screen	4–24
Figure 4–10.	Remote Maintenance Terminal (Compaq) UD32A10	4–87
Figure 4–11.	Dual A/B Switch (Black Box) UD32A2	4–89
Figure 4–12.	STATMUX (Penril VCX–150) UD32A3	4–91
Figure 4–13.	Dial–port Modem (Codex 326x) UD32A4 (Stand–Alone)	4–93
Figure 4–14.	BDDS Processor (Sun Ultra 5) UD70A1	4–95
Figure 4–15.	Router (Cisco 3640) UD70A2 (Individual site configuration may differ.)	4–97
Figure 4–16.	KVM Switch (Raritan SMX18) UD70A3	4–100
Figure 4–17.	17–Inch Monitor (Sun) UD70A4	4–102
Figure 4–18.	Keyboard and Mouse (Sun) UD70A5/UD70A6 and UD71A3/UD71A4	4–103
Figure 4–19.	RPG Processor (Sun Ultra 10) UD70A7	4–105
Figure 4–20.	Archive Storage Device (Iomega Jaz) UD70A8 and UD70A9 (Optional)	4–107
Figure 4–21.	Power Administrator (APC MasterSwitch) UD70A10	4–109
Figure 4–22.	UPS (APC SmartUPS) UD70A11	4–111
Figure 4–23.	RDA/RPG Gateway (Polycom) UD70A12	4–114
Figure 4–24.	LAN Switch (Cisco 2924) UD70A13	4–116
Figure 4–25.	Dedicated/Dial Modem Rack Assembly (Codex 326x) UD70A14	4–118
Figure 4–26.	Dedicated/Dial Modem Rack (Codex 326x) UD70A14 with 21–Slot Backbone (Rear View)	4–120
Figure 4–27.	Dial Port Modem (Codex 3262) UD70A14A1–A4 and Dedicated Port Modem (Codex 3263) UD70A14A5–A21	4–121
Figure 4–28.	Communication Server (PTI MPS 800) UD70A15, UD70A16, UD70A17	4–124

Figure	Title	Page
Figure 4–29.	Channel Service Unit (CSU) UD70A18	4–127
Figure 4–30.	Short Haul Modem UD70A19	4–131
Figure 4–31.	RS–232/RS–422 Converter (Black Box) UD70A20	4–132
Figure 4–32.	AC Power Distribution Panel UD70A22	4–133
Figure 4–33.	RMS Power Administrator (Baytech RPC–5), UD70/170A28 and UD70/170A29	4–135
Figure 4–34.	MSCF Processor (Sun Ultra 5) UD71A1	4–137
Figure 4–35.	21–Inch Monitor (Sun) UD71A2	4–139
Figure 4–36.	MSCF Dedicated Port Modem (Codex 3261 FAST) UD71A5	4–141
Figure 4–37.	Backup Storage Device (Iomega Jaz) UD71A6	4–143
Figure 4–38.	Frame Relay Hub Router (Cisco 2621XM) UD75A1	4–145
Figure 4–39.	Printer (Xerox/Tektronix Phaser 750) UD79A1	4–148
Figure 4–40.	RPG Control/Status Window (Main Menu)	4–294
Figure 4–41.	RDA Performance Data Window	4–296
Figure 4–42.	RDA Antenna/Pedestal Performance Data Window	4–297
Figure 4–43.	RDA Calibration Performance Data Window	4–298
Figure 4–44.	RDA Calibration Check Performance Data Window	4–299
Figure 4–45.	RDA Device Status Performance Data Window	4–300
Figure 4–46.	RDA Disk File Status Performance Data Window	4–301
Figure 4–47.	RDA Receiver/Signal Processor Performance Data Window	4–302
Figure 4–48.	RDA Tower Utilities Performance Data Window	4–303
Figure 4–49.	RDA Transmitter Performance Data Window	4–304
Figure 4–50.	RDA Wideband Communications Performance Data Window	4–305
Figure 4–51.	Console Messages Window	4–306
Figure 4–52.	HCI Properties Window	4–307
Figure 4–53.	Change Passwords Window	4–308
Figure 4–54.	Font Properties Window	4–309
Figure 4–55.	RDA Alarms Window	4–310
Figure 4–56.	VCP Control Window	4–312
Figure 4–57.	RDA Control/Status Window	4–316
Figure 4–58.	Reflectivity Calibration Window	4–317
Figure 4–59.	Moments Window	4–318
Figure 4–60.	Archive II Window	4–321
Figure 4–61.	Record Base Data Window	4–322
Figure 4–62.	RPG Control Window	4–325
Figure 4–63.	RPG Init Options Window	4–325
Figure 4–64.	RPG Products Window	4–326
Figure 4–65.	RPG Status Window	4–327
Figure 4–66.	Archive III Control/Status Window	4–329
Figure 4–67.	RDA/RPG Interface Control/Status Window	4–333
Figure 4–68.	MLOS Status Window	4–334
Figure 4–69.	Product Distribution Communications Status Window (2 Sheets)	4–338
Figure 4–70.	RPG Product Distribution Control Window	4–340

Figure	Title	Page
Figure 4–71.	PUP/RPGOP Status Window	4–341
Figure 4–72.	Load Shed Categories Window	4–344
Figure 4–73.	Password Window	4–344
Figure 4–74.	MSCF Display	4–347
Figure 4–75.	MSCF Communications Status Window (2 Sheets)	4–348
Figure 4–76.	MSCF Power Control Window (Coincides with Rear View)	4–351
Figure 4–77.	MSCF BDDS HCI Window	4–352
Figure 4–78.	MSCF Power Control Window	4–393
Figure 5–1.	HDLC Frame Structure	5–29
Figure FO5–1.	RPG Simplified Block Diagram (NWS)	FP–5–1
Figure FO5–2.	RPG Simplified Block Diagram (DoD)	FP–5–3
Figure FO5–3.	RPG Simplified Block Diagram (FAA Redundant)	FP–5–5
Figure FO5–4.	Local Area Network, Power Administration, and Router Functional Block Diagram (2 Sheets)	FP–5–7
Figure FO5–5.	RPG Processor Functional Block Diagram	FP–5–11
Figure FO5–6.	Communications Interface Functional Block Diagram	FP–5–13
Figure FO5–7.	Narrowband Communications Functional Block Diagram (NWS and DoD)	FP–5–15
Figure FO5–8.	FAA Redundant Narrowband Functional Block Diagram (2 Sheets)	FP–5–17
Figure FO5–9.	Base Data Distribution Server Functional Block Diagram	FP–5–21
Figure FO5–10.	Master System Control Function Functional Block Diagram	FP–5–23
Figure 6–1	System Fault Isolation Flowchart (Operability Check) (8 Sheets)	6–123
Figure 6–2.	RPG Fault Isolation Flowchart (Operability Check) (25 Sheets)	6–139
Figure 6–3.	Relay Box UD31	6–212
Figure 6–4.	Main Setup Menu	6–216
Figure 6–5.	Stand–Alone Dial Modem (Codex 326x) UD32A4	6–224
Figure 6–6	RPG Processor Assembly Ultra 10 (UD70A7) Interior Overview	6–239
Figure 6–7.	Dial and Dedicated Modem Card Removal and Replacement	6–272
Figure 6–8.	Dial and Dedicated Port (Rack–Mounted) Modem, Front Panel and DIP Switch Location	6–273
Figure 6–9.	Dedicated/Dial Modem Rack Front Door Hinge Detail	6–276
Figure 6–10.	Dedicated/Dial Modem Rack (Codex 326x) Power Supply/Fan Module Removal	6–277
Figure 6–11.	CSU UD70A18 Internal Switch S3	6–282
Figure 6–12.	RS–232/RS–422 Converter Card Shunt Settings	6–286
Figure 6–13.	BDDS and MSCF Processor Assembly Ultra 5 (UD70A1 and UD71A1) Interior Overview	6–303
Figure 6–14.	MSCF Color Printer, Interior View (Xerox/Tektronix)	6–324
Figure 6–15	Set Terminal Characteristics Menu	6–329
Figure 6–16.	First Configuration Service Submenu	6–330
Figure 6–17.	Level II Configuration Menu	6–331
Figure 6–18.	Global Parameters Form Menu	6–332
Figure 6–19.	Second Configuration Added To Form Menu	6–333

Figure	Title	Page
Figure 6–20.	Name Type Form Menu	6–334
Figure 6–21.	Dial and Dedicated Port (Rack–Mounted) Modem, Front Panel and DIP Switch Location	6–397
Figure 6–22.	MSCF Stand–Alone Dedicated Port Modem (Codex 3261 FAST) UD71A5	6–453
Figure 7–1.	Cables 70/170W303/304 Male Non–Standard Connectors	7–97
Figure 7–2.	Cable 70/170W311 Female Non–Standard Connectors	7–97
Figure FO7–1.	WSR–88D System Communications, Interface Diagram (7 Sheets)	FP–7–1
Figure FO7–2.	WSR–88D MSCF System Interconnectivity, (NWS with Remote RDA Terminal) (8 Sheets)	FP–7–15
Figure FO7–3.	RPGPCA Data Cables, NWS UD70 (2 Sheets)	FP–7–31
Figure FO7–4.	RPGPCA Data Cables, DoD UD70 (2 Sheets)	FP–7–35
Figure FO7–5.	RPGPCA Data Cables, FAA UD70/170 (2 Sheets)	FP–7–39
Figure FO7–6.	MSCF Group Assembly Power Distribution	FP–7–43
Figure FO7–7.	NWS Redundant Remote RDA Maintenance Terminal Power Distribution	FP–7–45
Figure FO7–8.	RPG Processor/Communications Assembly UD70 Power Distribution (NWS and DoD)	FP–7–47
Figure FO7–9.	RPG Processor/Communications Assembly UD70/170 Power Distribution (FAA Redundant)	FP–7–49

LIST OF TABLES

Table	Title	Page
Table 1–1.	RPG Group Unit Designations	1–3
Table 1–2.	RPG Narrowband Communications Interfaces	1–6
Table 1–3.	MSCF Group Unit Designations	1–9
Table 1–4.	RPG Group Equipment Physical Dimensions	1–12
Table 1–5.	MSCF Group Equipment Physical Dimensions	1–13
Table 1–6.	RPG Group Equipment Power Requirements	1–14
Table 1–7.	MSCF Group Equipment Power Requirements	1–15
Table 4–1.	Example Boot Sequence	4–25
Table 4–2.	Command Purposes Index	4–33
Table 4–3.	Remote Maintenance Terminal (Compaq) UD32A10 Controls and Indicators	–88
Table 4–4.	Dual A/B Switch (Black Box) UD32A2 Controls and Indicators	4–90
Table 4–5.	STATMUX (Penril VCX–150) UD32A3 Controls and Indicators	4–92
Table 4–6.	Dial–port Modem (Codex 326x) UD32A4 (Stand–Alone) Controls and Indicators	4–94
Table 4–7.	BDDS Processor (Sun Ultra 5) UD70A1 Controls and Indicators	4–96
Table 4–8.	Router (Cisco 3640) UD70A2 Controls and Indicators	4–98
Table 4–9.	KVM Switch (Raritan SMX18) UD70A3 Controls and Indicators	4–101
Table 4–10.	17–Inch Monitor (Sun) UD70A4 Controls and Indicators	4–102
Table 4–11.	Keyboard and Mouse (Sun) UD70A5/UD70A6 and UD71A3/UD71A4 Controls and Indicators	4–104
Table 4–12.	RPG Processor (Sun Ultra 10) UD70A7 Controls and Indicators	4–106
Table 4–13.	Archive Storage Device (Iomega Jaz) UD70A8 and UD70A9 (Optional) Controls and Indicators	4–108
Table 4–14.	Power Administrator (APC MasterSwitch) UD70A10 Controls and Indicators	4–110
Table 4–15.	UPS (APC SmartUPS) UD70A11 Controls and Indicators	4–112
Table 4–16.	RDA/RPG Gateway (Polycom) UD70A12 Controls and Indicators	4–115
Table 4–17.	LAN Switch (Cisco 2924) UD70A13 Controls and Indicators	4–117
Table 4–18.	Dedicated/Dial Modem Rack Assembly (Codex 326x) UD70A14 Controls and Indicators	4–119
Table 4–19.	Dial Port Modem (Codex 3262) UD70A14A1–A4 and Dedicated Port Modem (Codex 3263) UD70A14A5–A21 Controls and Indicators	4–122
Table 4–20.	Communication Server (PTI MPS 800) UD70A15, UD70A16, UD70A17 Controls and Indicators	4–125
Table 4–21.	CSU Controls and Indicators	4–128
Table 4–22.	Short Haul Modem UD70A19, Controls and Indicators	4–131
Table 4–23.	RS–232/RS–422 Converter UD70A20 (Black Box) Controls and Indicators	4–132
Table 4–24.	AC Power Distribution Panel UD70A22 Controls and Indicators	4–134
Table 4–25.	RMS Power Administrator (Baytech RPC–5) UD70/170A28 and UD70/170A29 Controls and Indicators	4–136

Table	Title	Page
Table 4–26.	MSCF Processor (Sun Ultra 5) UD71A1 Controls and Indicators	4–138
Table 4–27.	21–Inch Monitor (Sun) UD71A2 Controls and Indicators	4–140
Table 4–28.	MSCF Dedicated Port Modem (Codex 3261 FAST) UD71A5 Controls and Indicators	4–142
Table 4–29.	Backup Storage Device (Iomega Jaz) UD71A6 Controls and Indicators	4–144
Table 4–30.	Frame Relay Hub Router (Cisco 2621XM) UD75A1 Controls and Indicators	4–146
Table 4–31.	Printer (Xerox/Tektronix Phaser 750) UD79A1 Controls and Indicators	4–149
Table 4–32.	Operating System Shutdown Procedure	4–152
Table 4–33.	Base Data Distribution Server Shutdown Procedure	4–152
Table 4–34.	RPG Group Shutdown Procedure	4–153
Table 4–35.	Master System Control Function Group Shutdown Procedure	4–154
Table 4–36.	Remote RDA Maintenance Terminal Shutdown Procedure	4–154
Table 4–37.	RPG Group Startup Procedure	4–155
Table 4–38.	Base Data Distribution Server Startup Procedure	4–157
Table 4–39.	Master System Control Function Group Startup Procedure	4–157
Table 4–40.	Remote RDA Maintenance Terminal Startup Procedure	4–158
Table 4–41.	Stopping the RPG Applications Software	4–163
Table 4–42.	Starting the RPG Applications Software (Normal)	4–165
Table 4–43.	Starting the RPG Applications Software With Clean Start Mode	4–167
Table 4–44.	Stopping the RPG's HCI at MSCF	4–169
Table 4–45.	Stopping the Master System Control Functions Application	4–169
Table 4–46.	Starting the Master System Control Functions Application	4–170
Table 4–47.	Starting the RPG's HCI at MSCF	4–170
Table 4–48.	Stopping the BDDS Software	4–171
Table 4–49.	Starting the BDDS Software	4–173
Table 4–50.	Stopping the PowerChute Display	4–174
Table 4–51.	Starting the PowerChute Display	4–175
Table 4–52.	RPG Processor UD70A7 Full System Software Load	4–178
Table 4–53.	BDDS Processor UD70A1 Full System Software Load	4–188
Table 4–54.	MSCF Processor UD71A2A1 Full System Software Load	4–195
Table 4–55.	Load of New RPG Applications Software	4–206
Table 4–56.	Load of New MSCF Applications Software	4–212
Table 4–57.	Load of New BDDS Applications Software	4–217
Table 4–58.	RPG/MSCF/BDDS System Software Backup Using ufsdump (Example)	4–222
Table 4–59.	RPG Applications Software Backup	4–225
Table 4–60.	MSCF Applications Software Backup	4–228
Table 4–61.	Backup of BDDS User Account Directories Using tar	4–230
Table 4–62.	Backup of RPG or MSCF User Account Directories Using tar	4–234
Table 4–63.	Adaptation Data Backups at RPG Workstation	4–238
Table 4–64.	Adaptation Data Backups at MSCF Workstation	4–239
Table 4–65.	System Software Restoral Using ufsrestore (Individual File System Example)	4–241

Table	Title	Page
Table 4–66.	RPG Applications Software Restoral	4–245
Table 4–67.	MSCF Applications Software Restoral	4–247
Table 4–68.	Restoral of RPG or MSCF User Account Directories Made Using tar	4–250
Table 4–69.	Restoral of BDDS User Account Directories Made Using tar	4–254
Table 4–70.	RPG Adaptation Data Restoral at RPG Workstation	4–258
Table 4–71.	MSCF Adaptation Data Restoral at MSCF Workstation	4–259
Table 4–72.	MSCF Dial Modem Setup	4–260
Table 4–73.	Jaz Drive Disk Format and Mounting for Archive III (Preferred Method)	4–262
Table 4–74.	Jaz Drive Disk Format and Mounting for Archive III (Alternate Method)	4–266
Table 4–75.	Jaz Drive Disk Format and Mounting for Backup Purposes	4–269
Table 4–76.	Four/Eight Port Serial Card Driver Load	4–274
Table 4–77.	Date/Time Set Process	4–276
Table 4–78.	Normal Processor System Reinitialization Procedure	4–278
Table 4–79.	Abnormal Processor System Reinitialization Procedure	4–279
Table 4–80.	Find and Clean Out Core Dumps	4–282
Table 4–81.	Clean Out Printer Queues	4–283
Table 4–82.	Addition of Groups	4–285
Table 4–83.	Addition of Users	4–287
Table 4–84.	Switching Channels for NWS Redundant Systems from the Remote RDA Maintenance Terminal	4–353
Table 4–85.	Switching Channels for FAA Redundant Systems from the RPG Maintenance Terminal	4–355
Table 4–86.	Switching Channels for FAA Redundant Systems from the Distant MSCF	4–358
Table 4–87.	POST Keyboard Light Indications	4–363
Table 4–88.	POST Execution (min)	4–363
Table 4–89.	POST Execution (max)	4–366
Table 4–90.	OBDiag Execution	4–373
Table 4–91.	Communication Server Logical Link Mapping	4–378
Table 5–1.	Principal User Connections (NWS)	5–39
Table 5–2.	Principal User Connections (DoD)	5–41
Table 5–3.	Principal User Connections (FAA)	5–44
Table 6–1.	Active Site Specific Circuits	6–8
Table 6–2.	Active TCP/IP Network Dedicated Connections for Site	6–9
Table 6–3.	Flowchart Note Index	6–11
Table 6–4.	Color Printer Documentation Cross–Reference	6–202
Table 6–5.	Relay Function Map	6–204
Table 6–6.	RPG/LRU Replacement Procedure Index	6–207
Table 6–7.	Parameter Options	6–217
Table 6–8.	Special Function Characters	6–220
Table 6–9	LRU Setup Procedure Index	6–325
Table 6–10.	STATMUX UD32A3 Port Variables	6–336
Table 7–1.	Running Wire List	7–3

Table	Title	Page
Table 7–2.	Communication Server to Modem Rack Interconnections	7–98
Table 7–3.	Router Serial Card to Modem Rack Interconnections	7–99
Table 7–4.	Modem Rack to Adapter Panel Interconnections	7–100

FOREWORD

This technical manual provides maintenance personnel with an overview of Doppler Meteorological Radar WSR–88D Open Systems RPG Group. The acronym "RPG" is still applicable to the Open Systems Radar Product Generation function. This manual describes the purpose, structure, and functions of the RPG and discusses the operating and maintenance concepts. It consists of seven chapters, a glossary, and an index.

Chapter 1 General Information. This chapter describes the purpose, structure, capabilities, and itemization of the RPG.

Chapter 2 Not Used.

Chapter 3 Not Used.

Chapter 4 Operations. This chapter describes the RPG Group operations, procedures controls and indicators.

Chapter 5 Theory of Operations. This chapter describes the functional operation of the RPG Group.

Chapter 6 Maintenance. This chapter provides RPG on–site maintenance activities as well as a description of the RPG site maintenance concept.

Chapter 7 Reference Data. This chapter provides interface diagrams, interconnection cabling diagrams, cable wiring data and power distribution diagrams for the RPG Group.

Index

Glossary

This manual is one of a family of technical manuals which provide various levels of description, operation, maintenance, and logistics information on the WSR–88D. Refer to TO 31–1–141, Basic Electronic Technology and Testing Practices, for any basic electronic technology or testing practice that is not fully described in these documents. The WSR–88D technical manual family is defined and discussed in the System Manual, National Weather Service Engineering Handbook (NWS EHB) 6–500, Section 1–4.

The format of this technical manual is as follows:

- Since sections represent the major content divisions of the chapter or appendix, they are formatted as physically–separate standalone elements.
- Sections are numbered as subdivisions of the chapter or appendix. The section numbering system consists of two digits separated by a hyphen. The first digit indicates the chapter or appendix, the second digit indicates the section. Thus, Section 4–2 represents the second section of Chapter 4.

- Paragraph numbering is by section rather than by chapter. The basic numbering system consists of three digits, where the first two digits identify the section

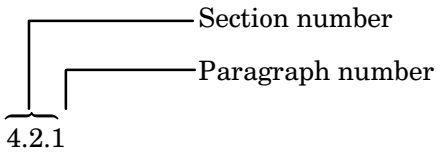

- A decimal paragraph number system is used to identify paragraph subordination

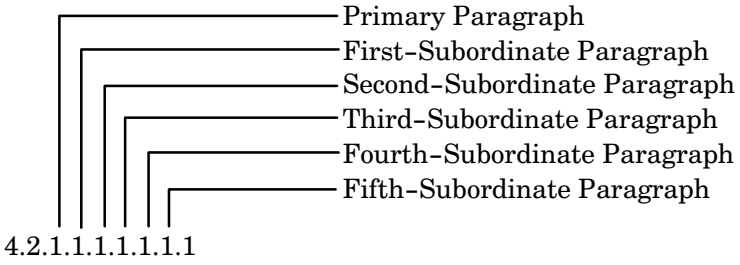

- Tables and figures are numbered consecutively within a chapter. The basic numbering system consists of two parts: the first part identifies the chapter and the last part identifies the table/figure.

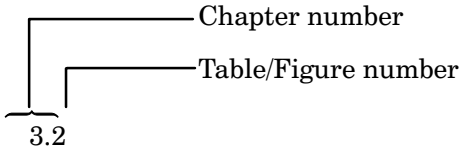

- Pages are numbered by chapter or appendix. The number consists of two digits separated by a hyphen. The first digit identifies the chapter or appendix. The second digit identifies the page, table, or figure.

- Foldout figures are grouped at the end of each chapter. The prefix FO is added to all foldout figure numbers to identify them as foldouts.

SAFETY SUMMARY

1. GENERAL SAFETY INSTRUCTIONS.

This manual describes physical and chemical processes which may cause injury or death to personnel, or damage to equipment if not properly followed. This safety summary includes general safety precautions and instructions that must be understood and applied during operation and maintenance to ensure personnel safety and protection of equipment. Prior to performing any task, the WARNINGs, CAUTIONs, and NOTEs included in that task shall be reviewed and understood.

2. WARNINGS, CAUTIONS, AND NOTES.

WARNINGs and CAUTIONs are used in this manual to highlight operating or maintenance procedures, practices, conditions, or statements which are considered essential to protection of personnel (WARNING) or equipment (CAUTION). WARNINGs and CAUTIONs immediately precede the step or procedure to which they apply. WARNINGs and CAUTIONs consist of four parts: heading (WARNING or CAUTION), a statement of the hazard, minimum precautions, and possible result if disregarded. NOTEs are used in this manual to highlight operating or maintenance procedures, practices, conditions, or statements which are not essential to protection of personnel or equipment. NOTEs may precede or follow the step or procedure, depending upon the information to be highlighted. The headings used and their definitions are as follows.

WARNING

Highlights an essential operating or maintenance procedure, practice, condition, statement, etc., which if not strictly observed, could result in injury to, or death of, personnel or long term health hazards.

CAUTION

Highlights an essential operating or maintenance procedure, practice, condition, statement, etc., which if not strictly observed, could result in damage to, or destruction of, equipment or loss of mission effectiveness.

NOTE

Highlights an essential operating or maintenance procedure, condition, or statement.

3. GENERAL SAFETY PRECAUTIONS.

The following safety precautions shall be observed while performing procedures in this manual.

- ELECTRICAL

  Dangerous voltages are present at system connectors. Ensure power is OFF prior to connecting or disconnecting cables.

- ELECTRONIC

  Do not wear metal frame glasses, rings, watches, or other metal jewelry while working on electronic equipment.

- HIGH VOLTAGE (POWER ON)

  Avoid contact with high voltage in the equipment, and do not remove safety guards, panels, or covers in the high voltage area. Severe injury or **DEATH** may occur upon contact with or in the proximity of high voltages due to electrical shock.

- KEEP AWAY FROM LIVE CIRCUITS

  Maintenance personnel must at all times observe all safety regulations. Do not replace components or make adjustments inside the equipment with the high voltage supply turned on. Under certain conditions, dangerous potentials may exist when the power control is in the off position due to charges retained by capacitors. To avoid casualties, always remove power, discharge and ground circuit before touching it.

- DO NOT SERVICE OR ADJUST ALONE

  Under no circumstances should any person reach into or enter an enclosure for the purpose of servicing or adjusting the equipment except in the presence of someone who is capable of rendering aid.

- RESUSCITATION

  Personnel working with or near high voltage should be familiar with modern methods of CPR. Such information may be obtained from the Red Cross or Heart Association. This knowledge may save a life.

- DO NOT WEAR JEWELRY

  Personnel performing maintenance on equipment are not to wear metal frame glasses, watches, rings, necklaces, bracelets, or other jewelry at any time. Electrical arcing can occur when metallic objects are in the proximity of voltage potentials. Jewelry can become entangled or otherwise restrict movement causing severe personal injury.

- CLEANING SOLVENTS (GENERAL)

  Wear protective clothing, safety goggles, and gloves when using toxic cleaning solvents. Repeated and prolonged contact may cause skin and eye irritation. Flush skin and eyes with water. Remove clothing saturated with cleaning solvent.

- CLEANING SOLVENTS (INHALATION)

  Use cleaning solvents only in a well–ventilated area. Avoid inhalation of cleaning solvents. Asphyxiation or **DEATH** may occur from prolonged exposure to fumes.

- PERFORM WORK EFFICIENTLY

  When working in areas designated as hazardous, perform work using the proper safety procedures. Be thoroughly familiar with the procedures required for the task before entering the area.

- SECURE ALL MATERIAL WHEN NOT IN USE

  Secure all tools, chassis, and covers before operating equipment.

- DO NOT USE METAL TOOLS NEAR EXPOSED PARTS

  Do not use brushes, brooms, or other tools that have exposed metal parts within four feet of any electrical equipment having exposed current–carrying parts.

- FALLING SNOW/ICE

  Snow and/or ice may accumulate on the radome and/or tower during inclement weather. This accumulation may fall from the radome/tower onto the shelters and walkways below. Be aware of this condition during the winter months.

4. SPECIFIC SAFETY PRECAUTIONS.

- ELECTRICAL SHOCK HAZARDS

  Prime power voltages and high voltages within cabinets can cause **DEATH** or severe injury. These voltages are contained in the generator area, the Radar Data Acquisition (RDA) area and Antenna area. Warning signs and labels are located on the guards and barriers to alert personnel of the potential hazard. DO NOT DISREGARD THESE WARNINGS. Ensure that safety interlocks, barriers and guards are not bypassed.

  In the RPG, the CRT has extremely high voltages present that can cause **DEATH** or severe injury. Warning labels and interlocks are present to prevent electrical shock. DO NOT BYPASS INTERLOCKS.

- MAJOR EQUIPMENT DAMAGE

  Mismatching electrical connectors in the RPG can cause major equipment damage. Therefore, ensure that the connector keys/color coding is followed when reconnecting connectors during maintenance.

- REMOVAL OF TOOLS

  Remove all tools and dropped hardware such as locknuts, washers, screws, etc., from equipment prior to restoring power to any WSR–88D equipment.

CHAPTER 1

GENERAL INFORMATION

Section 1.1. Introduction

NOTE

This chapter and its corresponding sections refer to the Radar Product Generation Processor/Communications Assembly as UD70. Unless otherwise specified, for Federal Aviation Administration (FAA) redundant systems, this information also applies to Radar Product Generation Processor/Communications Assembly UD170.

1.1.1 GENERAL.

This chapter is organized into sections as follows:

- Section 1.1 – Introduction
- Section 1.2 – Equipment Description
- Section 1.3 – Software Description
- Section 1.4 – Reference Data

Section 1.1 provides an introduction to the RPG Group and the Master System Control Function (MSCF) Group and describes the equipment's purpose, capabilities, physical dimensions, and power requirements. Section 1.2 describes the individual equipment items which makes up the RPG Group and the MSCF Group. Section 1.3 describes the software programs used in the RPG Group and MSCF Group. Section 1.4 identifies the reference data required for the RPG Group and the MSCF Group.

1.1.2 RPG GROUP EQUIPMENT.

The RPG group primarily consists of the RPG Processor/Communications Assembly (RPGPCA), Wideband Communication Links, and Product Distribution Network and Point–to–Point Links. Wideband Communication Links connect the RDA (Radar Data Acquisition) to the RPG. Narrowband Communication Links provide point–to–point communication links from the RPG to product users. Inter–network connections to the Router provide communications from RPG to associated users. For NWS redundant systems, the RPG group also includes a Remote RDA Maintenance Terminal. The major components of the RPGPCA and their purpose are discussed in paragraph 1.1.3. Table 1–1 lists the RPG Group Unit designators. Figure 1–1 shows the RPG and MSCF equipment relationships.

1.1.2.1 RPG Functionality. The RPG receives base data from the RDA Group and processes the data using stored algorithms to develop a set of derived meteorological products. The resulting product set, including the base products, is made available for distribution to the users.

The product distribution (e.g., principal users) fall into two categories: associated and non–associated. Associated users have full–time dedicated connections to one or more RPGs. Non–associated users have on–demand dial access to RPGs according to their operational need. User types are summarized in NWS EHB 6–500, paragraph 1–1.2.3 and Tables 3–1 and 3–2.

The RPG is also capable of distributing RDA digital–format base data to base data users via an optional Base Data Distribution Server (BDDS) processor. The RPG functional group includes all the hardware and software required for real–time generation, storage, and distribution of products for operational use. It also includes the hardware and software required for system remote control, status monitoring and error detection, product archiving, and hydro–meteorological data processing.

1.1.2.2 Wideband Communications Links. (See Figure 1–2.) A wideband communications link is used to exchange base data and radar status and control data between an RDA and its associated RPG group. Depending on the distance and local requirements, the wideband communications links between particular sites may be a Direct Wire link (for distances up to 400 ft.) or a Microwave Line of Sight (MLOS) link (for distances from 0.6 through 24 miles). Two types of T1 carrier systems may also be used, private T1 and telephone company (TELCO) T1. Private T1 is used when the link distance is less than 3,000 feet. In a TELCO T1 system, the telephone company's facilities are used as the medium for the digital pulse stream. An RDA Channel Service Unit (CSU) and an RDA/RPG Gateway at the RPG are used to hook into the telephone system. TELCO T1 provides communications for unlimited distances. It is used when it is available and economically feasible. Refer to the Wideband Communications Group Maintenance Manual (NWS EHB 6–545) for additional information on wideband communications links.

1.1.2.3 Product Distribution Users.

1.1.2.3.1 Narrowband Links. Narrowband communications links are used between the RPG and product users for product requests and distribution. External user systems may have full time connections to multiple RPGs. Some user systems may also support on–demand dial access to RPGs in remote locations. The narrowband communications links are modem–based point–to–point (analog) serial data lines. The links are either directly interconnected within the RPG facility or utilize transmission over dedicated or dial–up commercial telephone lines for external data distribution. Refer to Table 1–2 for the RPG narrowband communications interfaces.

1.1.2.3.2 Network Connections. External user systems may inter–network with the RPG. If the RPG and user system are collocated the systems may have LAN inter–network connections. If the RPG and user system are remote, the systems may have WAN inter–network connections.

1.1.2.4 Remote Monitoring Subsystems (FAA Only). A link is provided between each RPG and the Remote Monitoring Subsystem (RMS). The RMS has links with the applications and operating system functionality of the RPG processor.

Table 1–1. RPG Group Unit Designations

Reference Designation	Official Nomenclature	Common Name
	Remote RDA Maintenance Terminal*	N/A
UD32	Terminal (Alphanumeric), Dual A/B Switch, Statistical Multiplexer (STATMUX), Dial–Port Modem (MOdulate/DEModulate)	Remote RDA Terminal
	RPG Processor/Communications Assembly	RPGPCA
UD70/UD170	The RPGPCA includes all equipment in the 2–bay equipment cabinet (RPG and BDDS processors, Local Area Network (LAN) Switch, Router, RDA/RPG Gateway, Uninterruptible Power Source (UPS), Power Administrator, and miscellaneous Narrowband Communication equipment).	RPGPCA

* NWS redundant systems only.

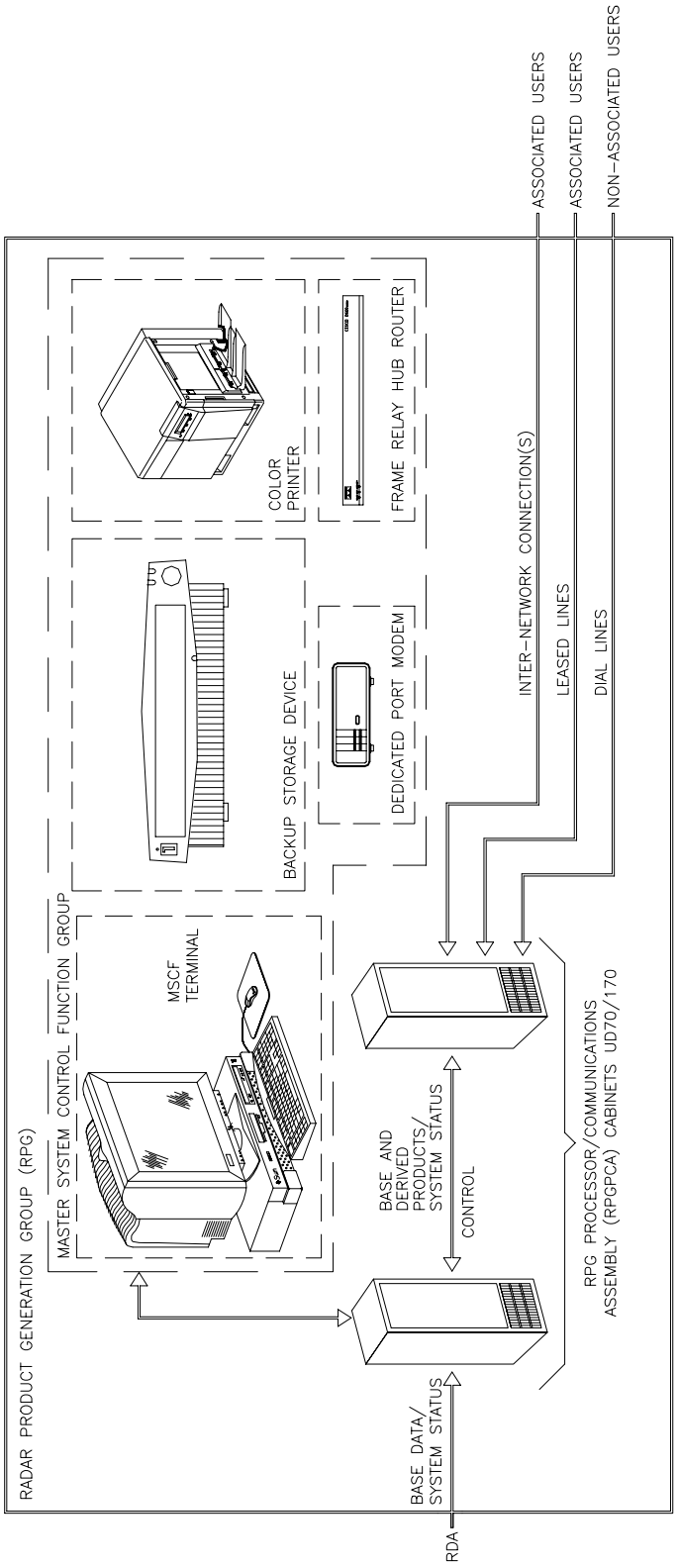

NX1596

Figure 1–1. RPG and MSCF Group Equipment Relationship

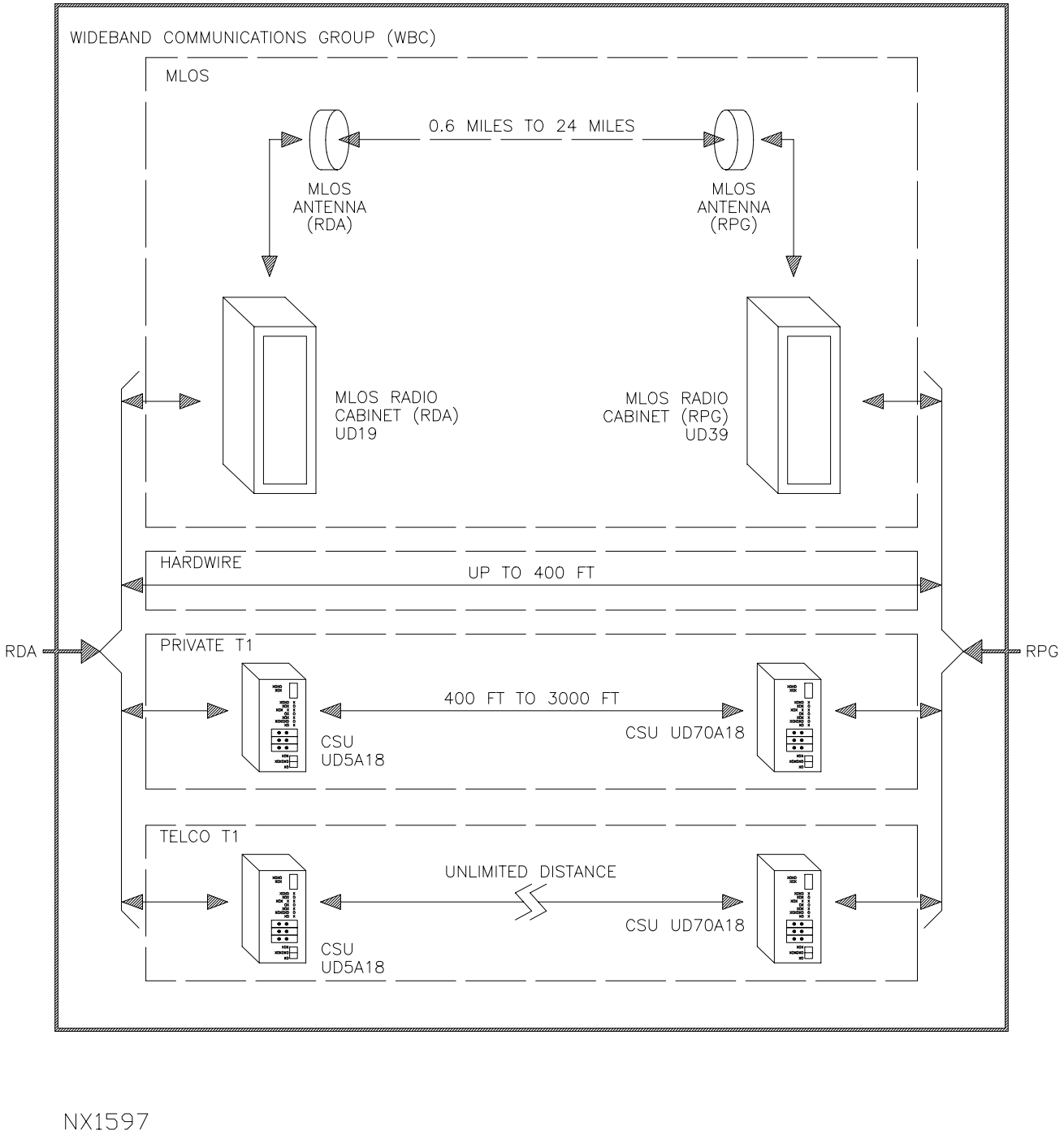

Figure 1–2. Wideband Communications Group

Table 1–2. RPG Narrowband Communications Interfaces

External Connection	RPGOP_50	Class 1	Class 2	Class 4	RPGOP_90
Line Type	Serial	Serial	Serial	Serial	LAN
Protocols	X.25	X.25 or PPP	X.25 or PPP	X.25	TCP/IP/ Ethernet
Timing	Sync	Sync or Async	Sync or Async	Sync or Async	N/A
Duplex Type	Full	Full	Full	Full	Half
Data Rate, bits per second (BPS) x 1000)	33.6/56	4.8/14.4	4.8/14.4	4.8/14.4	10000
Data Link	ITU	ITU	ITU	ITU	IEEE10.2 RFC
Physical	RS–449	RS–232	RS–232	RS–232	EIA568–B
Line	4–Wire Leased	4–Wire Leased	2–Wire Switched	4–Wire Leased	CAT 5

1.1.2.5 Remote RDA Maintenance Terminal. For NWS redundant systems, the Remote RDA Maintenance Terminal is used for program control and switching of channels. It connects to NWS channel 1 RDA, UD105. The terminal consists of CPU UD32A9, Monitor UD32A10, Keyboard UD32A11, and Mouse UD32A13, Dual A/B Switch UD32A2, STATMUX UD32A3, and Dial–line Modem UD32A4. A corresponding dial–line Modem and STATMUX are housed in UD105, enabling the Remote RDA Maintenance Terminal to communicate with both NWS channels via a narrowband line. The Dual A/B Switch is used to switch the application and system console port of either channel to the Terminal.

1.1.2.6 Redundant Systems. In addition to WSR–88D systems that contain one RPG and one RDA, there are also two types of redundant systems: NWS and FAA. They are called NWS redundant systems and FAA redundant systems after the agencies that use them.

1.1.2.6.1 NWS Redundant System. The NWS redundant system contains one RPG, two RDAs, and a switch which sends either RDA's information to the RPG. Selection between the two channels and control of the system is performed at a Remote RDA Maintenance Terminal, which contains a monitor and keyboard.

1.1.2.6.2 FAA Redundant System. The FAA redundant system contains two RPGs, each connected to a corresponding RDA. Each RPG is referred to as a channel. Channel 1 contains the RPGPCA UD170. Channel 2 contains the RPGPCA UD70. The FAA redundant system also contains a relay box that switches either RPG's information to associated and non–associated users via narrowband communication lines. Selection between the two channels, data entry, and program control for the system is performed at a Distant MSCF. The RPGs in FAA Redundant Systems are monitored and controlled by a RMS.

1.1.2.7 Embedded Consoler Server (ECS). Hardwired serial interface for console port access to most RPG components is provided by an eight port serial card installed in the RPG Processor UD70A7. Refer to Section 5.4 for a detailed description.

1.1.3 RPGPCA EQUIPMENT PURPOSE.

Each component of the RPGPCA has a unique and specific purpose. A list of these components with an explanation of their purpose and capabilities are listed below. These components are normally found within the RPGPCA cabinets.

1.1.3.1 BDDS Processor UD70A1. The BDDS receives a retransmission of the wideband data from the RPG processor and converts it to a unique, secure format for retransmission to the optional BDDS users.

1.1.3.2 Router UD70A2. The Router provides external access into the RPG LAN. It receives a Transmission Control Protocol/ Internet Protocol (TCP/IP) feed from the LAN Switch. All NWS sites have an ethernet connection between the Router and the AWIPS LAN. With this capability, the Router provides the LAN–to–LAN inter–network connection to AWIPS. For the Department of Defense (DoD) and FAA systems, the Router allows the MSCF to access both the RPG LAN Switch and the Power Administrator through a PPP modem link or a TCP/IP frame relay link. For the FAA system, it also allows the MSCF to access both Channel 1 and Channel 2 RPG LAN Switch and the Power Administrator. All RPG routers have PPP user connections for external systems to inter–network via serial analog modem links.

1.1.3.3 Keyboard, Video, Mouse (KVM) Switch UD70A3. The KVM Switch allows the RPG processor and the BDDS processor to share one keyboard, monitor (video), and mouse within the RPGPCA cabinet. The user toggles between the two processors using the KVM Switch.

1.1.3.4 17–Inch Monitor UD70A4, Keyboard UD70A5, and Mouse UD70A6. The monitor, keyboard, and mouse provides the user with the tools for successful interaction with the RPG and BDDS processors.

1.1.3.5 RPG Processor UD70A7. The RPGPCA has an RPG processor which provides product generation, local storage, distribution control, and archiving of selected products and derived data. It controls the RDA operating modes and monitoring of the operational status of the overall WSR–88D system. It provides the graphical Human Computer Interface (HCI) for system control and monitoring. It also provides a retransmission of the wideband data to the BDDS. The RPG processor includes a processor, monitor, keyboard, and mouse. The RPG processor exercises remote control of the RDA as controlled from the MSCF.

1.1.3.6 Archive Storage Device UD70A8 and UD70A9. The RPGPCA has an Archive Storage Device which can act as an Archive III unit and/or for creating back−up copies of system software. The Archive Storage Device is directly connected to the RPG processor in the RPGPCA. Currently only NWS sites have an Archive III requirement. A second Archive Storage Device (UD70A9) is an optional expansion component and will not be installed at all sites.

1.1.3.7 Power Administrator UD70A10. The American Power Conversion (APC) Power Administrator provides for individual control of AC power to selected devices (eight maximum). This allows a selected device to be powered off and on remotely; thus, achieving a remote reset capability for the device.

1.1.3.8 UPS UD70A11. Critical RPGPCA components are powered from an UPS. The UPS provides the uninterrupted AC power for the Power Administrator and other selected devices in the RPGPCA cabinet. In addition, the UPS is set to automatically shut down the RPG and BDDS processors in the event of an extended power failure.

1.1.3.9 RDA/RPG Gateway UD70A12. The Polycom RDA/RPG Gateway (UD70A12) is a protocol translator that provides the gateway between the RDA and RPG with its built−in CSU/DSU. The RDA/RPG Gateway's primary purpose is to provide the protocol translation for the wideband T1 DSX−1 data to TCP/IP format which is used internally on the RPG's LAN components.

1.1.3.10 LAN Switch UD70A13. The LAN Switch provides the ethernet TCP/IP network backbone for the RPG system. The NWS LAN switch also provides a TCP/IP Virtual LAN (VLAN) backbone for up to four physical BDDS LAN connections. Almost all RPGPCA components communicate with each other using the TCP/IP, and the LAN Switch provides the central interconnectivity point for these devices.

1.1.3.11 Dedicated/Dial Modem Rack Assembly UD70A14. The Dedicated/Dial Modem Rack Assembly is comprised of analog modems or modem−type devices for narrowband link product distributions. Modem slots are grouped together and designated as either dial or dedicated user slots. The Dedicated/Dial Modem Rack Assembly receives RS−232 data for narrowband transmission either from X.25 communication servers or from PPP serial ports on the router. DoD and FAA systems have either a modem or a frame relay link designated for their Distant MSCF.

1.1.3.12 Communication Server UD70A15, UD70A16, and UD70A17. The Performance Technologies Incorporated (PTI) Multi−Protocol Server (MPS) 800 Communication Servers perform the protocol conversion from TCP/IP to X.25 for each user and then sends the data over RS−232 serial connections to the Dedicated/Dial Modems for distribution to users.

1.1.3.13 RMS Power Administrators UD70/170A28 and UD70/170A29. FAA Redundant Systems have additional Power Administrators. These two Power Administrators in each channel are controlled through the FAA RMS and allow remote power off/on reset of the individual components.

1.1.3.14 Relay Box UD31. Only FAA Redundant Systems have the Relay Box. The relay box contains up to 60 relays that are used to switch narrowband communication lines from Channel 1 or Channel 2 to associated and non−associated users. The relay box is not located within the RPGPCA but mounted on the RDA shelter wall.

1.1.4 MSCF GROUP EQUIPMENT.

The MSCF Group major components are the MSCF Workstation (UD71) and the Printer Workstation (UD79). The MSCF Workstation equipment consists of the MSCF Terminal Suite, Surge Suppressor, and a Backup Storage Device. DoD and FAA Systems will have either a Dedicated Port Modem or a Frame Relay Hub Router (UD75) as part of their MSCF Group. The Printer Workstation (UD79) consists of a Color Printer and Stand and is normally found adjacent to the MSCF Workstation. Paragraph 1.1.5 discusses the MSCF Group equipment. Table 1–3 lists the MSCF Group Unit Designators and Figure 1–1 shows the RPG and MSCF Group relationships.

Table 1–3. MSCF Group Unit Designations

Reference Designation	Official Nomenclature	Common Name
	MSCF Workstation	MSCF
UD71	Terminal Suite (Processor, Monitor, Keyboard, and Mouse), Backup Storage Device, Surge Suppressor, and Dedicated Port Modem*	MSCF Terminal
	Frame Relay Hub Router	Hub Router
UD75	2600 Series Router	MSCF Router
	Printer Workstation	Printer
UD79	Color Printer	MSCF Printer

* For some FAA and DoD MSCFs.

1.1.5 MSCF GROUP EQUIPMENT PURPOSE.

The MSCF is the man/machine interface that allows the operator and maintenance technician to interact with the RPG processor operating system, application graphics, and maintenance programs. The applications functionality specifically designed to provide the graphical control interface to the RPG processor is called the HCI. The HCI is discussed in further detail in the NWS EHB 6–526 for operators and in Section 4.7 of the NWS EHB 6–525 for maintenance technicians. The MSCF provides control over the RPG processing functions by permitting the selection of products to be routinely generated and a product subset to be archived. It also provides the interface to access the operating system, initialize the RPG processor, and perform first level analysis of system malfunctions.

The MSCF Workstation is comprised of a terminal suite containing a MSCF processor UD71A1, a 21–inch Monitor UD71A2, Keyboard UD71A3, and Mouse UD71A4. The MSCF Workstation is also comprised of a Backup Storage Device UD71A6, Surge Suppressor UD71E1, and either a Dedicated stand–alone Modem UD71A5 or a Frame Relay Hub Router UD75 for FAA and DoD sites. The Printer Workstation is normally found close to the MSCF Workstation.

1.1.5.1 Local MSCF. NWS systems will have a Local MSCF Workstation. A MSCF is normally collocated with the associated user that supports editing of the RCM function. Thus, with NWS systems, the MSCF is located locally (within the same building) with the RPGPCA. The Local MSCF has a direct TCP/IP path to the Router in the RPGPCA. The Router provides a serial (out of bandwidth) connection to the Power Administrator and a direct TCP/IP (in bandwidth) connection to the LAN Switch.

1.1.5.2 Distant MSCF. DoD and FAA systems will have a Distant MSCF. The Distant MSCF may be miles from the RPGPCA. A Distant MSCF is connected to the RPGPCA via a narrowband communications link using a 33.6 Kilobits (Kbits)/sec Ddedicated–port modems or CSU/DSU modules at both the MSCF Workstation (in the Frame Relay Hub Router UD75) and RPGPCA (in the router UD70A2). When the MSCF is distant, the following configurations exist.

- DoD Collocated RDA/RPG without Frame Relay: For DoD systems, the MSCF is considered to be distant from the RPG Processor because the RPG is collocated with the RDA and usually miles away from the MSCF. The distant MSCF is linked to the RPG via a dedicated modem at both the MSCF and RPG. The majority of the DoD systems have the MSCF at NWS sites.

- DoD Collocated RDA/RPG with Frame Relay: For DoD systems, the MSCF is considered to be distant from the RPG Processor because the RPG is collocated with the RDA and usually miles away from the MSCF. The distant MSCF is linked to the RPG via a frame relay circuit with a frame relay hub router at a NWS site.

- FAA Collocated RDA/RPG without Frame Relay: For FAA systems, the MSCF is considered to be distant from the RPG Processor because the RPG is collocated with the RDA usually miles away from the MSCF. The distant MSCF is linked to the RPG via a dedicated modem at both the MSCF and RPG. The majority of the FAA systems have the MSCF at NWS sites.

- FAA Collocated RDA/RPG with Frame Relay: For FAA systems, the MSCF is considered to be distant from the RPG Processor because the RPG is collocated with the RDA usually miles away from the MSCF. The distant MSCF is linked to the RPG via a frame relay circuit with a frame relay hub router at a NWS site.

1.1.5.3 Frame Relay Hub Router. Most, but not all, DoD and FAA sites will use frame relay service. Frame relay service is not used at all sites because it cannot be obtained at every location. Where frame relay service is used, the Frame Relay Hub Router UD75 supports frame relay circuits that have replaced X.25 dedicated analog circuits. The replacement occurred because analog circuits were being overdriven. These circuits are used to send radar products (RPS data) to AWIPS and to control and command DoD and FAA radars (MSCF data). Frame relay service also supports One Time Requests (OTR) from DoD and FAA radars via the AWIPS WAN. Frame relay service equipment consists of the Frame Relay Hub Router UD75 located at the NWS Weather Offices controlling DoD and FAA radars and a CSU/DSU module installed in all RPG Routers.

1.1.6 LEADING PARTICULARS.

The following lists the leading particulars and the tables where they can be found:

- RPG Group Equipment Physical Dimensions – Table 1–4
- MSCF Group Equipment Physical Dimensions – Table 1–5
- RPG Group Power Requirements – Table 1–6
- MSCF Group Power Requirements – Table 1–7
- RPG Narrowband Communications Interfaces – Table 1–2
- Wideband Communications Characteristics/Interface – Refer to NWS EHB 6–545.

Table 1–4. RPG Group Equipment Physical Dimensions

Equipment Nomenclature	Height (Inches)	Width (Inches)	Depth (Inches)	Weight (Pounds)
RPG Processor/Communications Assembly UD70	79.00	48.00	32.00	1000.0
BDDS (Sun Ultra 5) UD70A1*	4.31	17.17	16.69	22.4
RPG Router (Cisco 3640) UD70A2	3.44	17.50	15.80	30.0
KVM Switch (Raritan SMX18) UD70A3*	1.75	17.00	10.50	6.1
RPG 17–Inch Monitor (Sun) UD70A4	16.26	16.61	17.05	21.0
RPG Processor (Sun Ultra 10) UD70A7	15.75	6.93	16.54	27.0
Archive Storage Device (Iomega Jaz) UD70A8 and UD70A9*	1.50	5.33	8.00	2.0
Power Administrator Unit, (APC MasterSwitch) UD70A10	2.125	17.00	6.50	6.5
UPS (APC Smart UPS) UD70A11	3.50	19.00	18.00	63.0
RDA/RPG Gateway (Polycom) UD70A12	1.75	17.50	6.50	3.0
LAN Switch (Cisco 2924) UD70A13	3.46	17.50	12.00	13.8
Dedicated/Dial Modem Rack Assembly (Codex 326X) UD70A14				
Dual Dial Modems UD70A14A1–A4**	0.75	8.00	14.50	1.5
Dedicated Modems UD70A14A5–A21**	0.75	8.00	14.50	1.5
Communication Server (PTI MPS 800) UD70A15/A16/A17	1.55	16.80	10.45	9.8
Channel Service Unit (CSU) UD70A18	1.72	6.80	10.50	2.0
Short Haul Modem UD70A19*	0.80	2.10	2.70	0.4
RS232/RS422 Converter UD70A20* (NWS System Only)	2.10	8.80	11.50	2.0
RMS Power Administrator (Baytech) UD70/170A28, A29 (FAA Systems Only)	1.72	16.73	6.17	4.25
Relay Box Power Supply UD70PS1 (FAA System Only)	5.00	10.50	3.75	8.0
Relay Box UD31	23.90	23.10	9.50	14.0

* Location and/or equipment is dependent upon station configuration.
** Maximum modems, not included with every configuration.
*** Used in NWS redundant systems only.

Table 1–4. RPG Group Equipment Physical Dimensions– Continued

Equipment Nomenclature	Height (Inches)	Width (Inches)	Depth (Inches)	Weight (Pounds)
Remote RDA Maintenance Terminal UD32***				
CPU UD32A9	4.5	17.0	17.0	22.0
Monitor UD32A10	16.0	16.0	17.0	21.0
Dual A/B Switch UD32A2	3.50	6.00	6.30	2.0
STATMUX UD32A3	3.50	17.20	16.50	9.0
Dedicated Port Modem UD32A4	2.39	6.70	9.60	2.0

* Location and/or equipment is dependent upon station configuration.
** Maximum modems, not included with every configuration.
*** Used in NWS redundant systems only.

Table 1–5. MSCF Group Equipment Physical Dimensions

Equipment Nomenclature	Height (Inches)	Width (Inches)	Depth (Inches)	Weight (Pounds)
MSCF Workstation UD71				
MSCF Processor (Sun Ultra 5) UD71A1	4.31	17.17	16.69	22.4
21–Inch Monitor (Sun) UD71A2	19.78	19.70	18.76	68.25
Keyboard (Sun) UD71A3	2.00	20.50	7.00	2.0
Mouse (Sun) UD71A4	0.75	2.50	3.50	< 1.0
MSCF Dedicated Port Modem (Codex) UD71A5*	2.39	6.70	9.60	2.0
Backup Storage Device (Iomega Jaz) UD71A6	1.50	5.33	8.00	2.0
Surge Suppressor UD71E1	*	*	*	*
MSCF Table UD71MP1	30.00	48.00	24.00	80.0
MSCF Group Router UD75*				
Frame Relay Hub Router UD75	3.44	17.5	15.8	10.24
Printer Workstation UD79*				
MSCF Color Printer (Xerox/Tektronix Phaser 750) UD79A1	18.30	20.00	19.70	94.0
Printer Stand UD79MP1	27.00	24.00	30.00	20.0

* Location and/or equipment is dependent upon station configuration.

Table 1–6. RPG Group Equipment Power Requirements

Equipment Nomenclature	Voltage (VAC)	Hertz	Phase	Power (Watts)
RPG Processor/Communications Assembly UD70	208	60	3	
BDDS (Sun Ultra 5) UD70A1*	120	60	1	200 (max)
RPG Router (Cisco 3640) UD70A2	120	60	1	140 (max)
KVM Switch (Raritan SMX18) UD70A3*	120	60	1	23 (max)
RPG Maintenance Terminal 17–Inch Monitor (Sun) UD70A4	120	60	1	100 (avg.)
RPG Maintenance Terminal Processor (Sun Ultra 10) UD70A7	120	60	1	250 (avg.)
RPG Archive Storage Device (Iomega Jaz) UD70A8 and UD70A9*	120	60	1	60 (avg.)
Power Administration Unit (APC MasterSwitch) UD70A10	120	60	1	***
UPS (APC UPS) UD70A11	120	60	1	950 (max)***
RDA/RPG Gateway (Polycom) UD70A12	120	60	1	120 (max)
LAN Switch (Cisco 2924) UD70A13	120	60	1	100 (avg.)
Dedicated/Dial Modem Rack Assembly UD70A14 (Codex 326x)	120	60	1	15 (avg.)
Communication Server (PTI MPS 800) UD70A15/A16/A17	120	60	1	120 (max)
RMS Power Control (Baytech) UD70/170A28, A29 (FAA Systems Only)	120	60	1	***
Relay Box Power Supply UD170PS1 (FAA Systems Only)	120	60	1	515 (max)
Remote RDA Maintenance Terminal UD32**				
CPU UD32A9	120	60	1	200
Monitor UD32A10	120	60	1	100
Dual A/B Switch UD32A2	N/A	N/A	N/A	N/A

* Location and/or equipment is dependent upon station configuration.
** Used in NWS redundant systems only.
*** Power draw is dependent upon number of systems it is supporting.

Table 1–6. RPG Group Equipment Power Requirements– Continued

Equipment Nomenclature	Voltage (VAC)	Hertz	Phase	Power (Watts)
STATMUX UD32A3	120	60	1	30 (avg.)
Dedicated Port Modem UD32A4	120	60	1	15 (avg.)

* Location and/or equipment is dependent upon station configuration.
** Used in NWS redundant systems only.
*** Power draw is dependent upon number of systems it is supporting.

Table 1–7. MSCF Group Equipment Power Requirements

Equipment Nomenclature	Voltage (VAC)	Hertz	Phase	Power (Watts)
MSCF Workstation UD71				
MSCF Processor (Sun Ultra 5) UD71A1	120	60	1	200 (avg.)
21–Inch Monitor (Sun) UD71A2	120	60	1	160 (max)
MSCF Dedicated Port Modem UD71A5*	120	60	1	15 (avg.)
Backup Storage Device (Iomega Jaz) UD71A6	120	60	1	60 (avg.)
Surge Suppressor UD71E1	120	60	1	***
MSCF Group Router UD75				
Frame Relay Hub Router UD75	120	60	1	72 (max)
Printer Workstation UD79				
MSCF Color Printer (Xerox/Tektronix Phaser 750) UD79A1	120	60	1	115 (avg.)

* DoD and FAA sites only.
*** Power draw is dependent upon number of systems it is supporting.

Section 1.2. Equipment Description

NOTE

This chapter and its corresponding sections refer to the RPGPCA as UD70. Unless otherwise specified for FAA redundant systems, this information also applies to RPGPCA UD170.

1.2.1 RPG GROUP EQUIPMENT SUPPLIED.

Refer to NWS EHB 6–501, Illustrated Parts Breakdown (IPB) for the component listing for the RPG Group.

1.2.2 RPG EQUIPMENT DESCRIPTION.

The RPG Group major subgroup is the RPGPCA UD70. The Remote RDA Maintenance Terminal is grouped as UD32. This section lists and describes the major components which makes up the RPG Group. The RPGPCA equipment is shown in Figure 1–3.

1.2.2.1 RPG Processor/Communications Assembly UD70. The RPGPCA UD70 (Figure 1–3) provides the computation, storage, and data entry resources necessary to support on–line Product Generation and off–line execution of RPG Test software.

The RPGPCA components are listed as follows:

- BDDS
- Router
- KVM Switch
- RPG Processor
- Archive Storage Device
- Power Administrator
- UPS
- RDA/RPG Gateway
- LAN Switch
- Communication Servers
- Channel Service Unit
- Narrowband Communications Equipment

1.2.2.1.1 Sun Ultra 5 BDDS Processor. The BDDS processor (UD70A1) is a Sun Ultra 5 workstation (UD70A1). It is a uniprocessor system that uses, at a minimum, an UltraSPARC 400 Megahertz (MHz) Processor. The BDDS processor has at least 256 Megabytes (MB) of Random Access Memory (RAM). The standard diskette drive (floppy) supports standard 3.5–inch diskettes. A Compact Disk – Read Only Memory (CD–ROM) drive is included. The hard drive for the system has a 9.1 Gigabyte (GB) (minimum) formatted capacity. The BDDS processor is installed at NWS and DoD sites and shares a Sun 17–inch color monitor, keyboard, and mouse (via a KVM Switch) with the RPG processor.

1.2.2.1.2 Cisco Router. The Cisco Router (UD70A2) is a multifunctional platform that combines dial access and inter–network services to the RPG LAN. The standard components include a 100–MHz IDT R4700 Reduced Instruction Set Computer (RISC) Processor, 2 PCMCIA slots, high–speed console and auxiliary ports, and 64 MB of Dynamic Random Access Memory (DRAM). For NWS systems, the Router inter–connects two LAN systems (RPG and AWIPS). For DoD and FAA systems, the Router provides a RS–232 serial PPP LAN bridge or a frame relay TCP/IP bridge to the Distant MSCF. The Router also provides WAN access to external users via the RS–232 serial PPP ports.

1.2.2.1.3 Raritan KVM Switch. The KVM Switch (UD70A3) allows control of up to 8 Sun processors from a single keyboard, mouse, and monitor. The KVM Switch uses the keyboard to toggle between channels; thus, selection to a different Sun processor is made easily. The KVM Switch is located in the RPGPCA, at NWS and DoD sites, to toggle between the RPG processor and the BDDS processor.

1.2.2.1.4 Sun Ultra 10 RPG Processor. The RPG processor is a Sun Ultra 10 workstation (UD70A7). It's a uniprocessor system using, at a minimum, an UltraSPARC 440 MHz processor. The RPG processor has a minimum of 256 MB of RAM. The diskette drive (floppy) uses standard 3.5–inch diskettes. A CD–ROM drive is included. The primary hard drive has a 9.1 GB (minimum) formatted capacity. An optional (slave) hard drive may also be installed. The remainder of the workstation consists of a Sun 17–inch color monitor, keyboard, and mouse.

1.2.2.1.5 Iomega JAZ Archive Storage Device. The Iomega Jaz Archive Storage Device (UD70A8 and UD70A9) is a portable external archive storage device which uses disks for data storage. Each Iomega Jaz disk has the capacity to store 2 GB (2002 MB) of data. Average transfer rate of data is 7.4 MB/sec. This component is used for Archive III, which is applicable to NWS systems. For all RPG systems, this is the component used to create software backups for the RPG system.

1.2.2.1.6 APC Power Administrator. The APC Power Administrator (UD70A10) provides for individual control of Alternating Current (AC) power to selected devices (eight maximum). This individual control allows a selected device to be powered off and on remotely, thus achieving a remote reset capability for the device. The Power Administrator has 8, 120–VAC, 15–Amp power receptacles and a 15–Amp circuit breaker.

1.2.2.1.7 APC UPS. An APC SmartUPS 1400 (UD70A11) provides the uninterrupted AC power for the Power Administrator and other selected devices in the RPGPCA (UD70). It has a maximum load of 950 watts or 1400 Volt Amps (VA) (950 W * 1.4). It has six outlet receptacles for components to utilize the UPS. Its runtime is dependent on the VA load utilizing the UPS; the runtime ranges from 7.4 minutes at full load to 21 minutes at half load. Recharge time to return UPS to 90% from 50% is 1 to 2 hours. The UPS comes with Powerchute software which allows the system administrator to monitor the UPS performance.

1.2.2.1.8 Polycom RDA/RPG Gateway. A Polycom protocol translator provides the gateway between the RDA and RPG. The T1 DSX−1 formatted wideband data from the RDA enters (via the cabinet I/O entrance panel) and is connected directly to the Wide Area Network (WAN) B interface of the RDA/RPG Gateway (UD70A12) on an RJ−48 phone−type jack for DoD and FAA systems. For NWS systems, the data first passes through CSU UD70A18. The WAN A port on the RDA/RPG Gateway is not used.

1.2.2.1.9 Cisco LAN Switch. The Cisco 2924 LAN Switch (UD70A13) is the backbone of the RPG system. This LAN Switch provides 24 switchable 10BaseT or 100BaseT RJ−45 jacks. The switch is a self−contained unit with an integrated power supply and 4 MB of internal memory. The switch provides autosensing for switching between 100 Mbps and 10 Mbps, and also provides autonegotiation of half duplex and full duplex operation.

1.2.2.1.10 PTI Communication Servers. The PTI MPS800 (UD70A15, UD70A16, and UD70A17) is a serial data communications server. It connects to the LAN Switch through a TCP/IP Ethernet interface and provides X.25 point−to−point connectivity via its serial ports. In the RPGPCA, three Communication Servers are used and each can serve as many as eight separate X.25 communications links. Each Communication Server utilizes a Motorola MPC860T Power PC as the main processor/communications controller and a Motorola MC68360 as a slave processor/communications controller. Each Communication Server has 16 MB of main memory, 1 MB of Synchronous Static Random Access Memory (SSRAM), 1 MB of applications flash memory, and 512 kilobytes (KB) of boot flash memory.

1.2.2.1.11 Verilink 2100 CSU (NWS Only). The T1 DSX−1 formatted wideband data enters into the RPGPCA CSU (UD70A18) from the RDA (via the cabinet I/O entrance panel) and then the data is forwarded on to the RDA/RPG Gateway UD70A12. The CSU is responsible for providing the proper electrical interface to the T1 circuit and for shaping and regenerating the signal. The CSU supports a loopback test from a remote end and a test switch is provided to activate a loopback test from the local end.

1.2.2.1.12 Narrowband Communication Equipment. The RPG Narrowband Equipment consists of Type I and II modems and an RS−422/RS−232 converter. The Type I and II modems allow narrowband communication between the RPG processor and product distribution users. The RS−232/RS−422 converters allow the RPG to communicate with a collocated user without using a telephone link (uses RS−449 physical standard DB−37). In the Distant MSCF configuration, the MSCF terminal is linked to the RPG via dedicated−port modems or a CSU/DSU modules in the RPG Router if frame relay service is implemented. The Local MSCF does not use the leased telecommunications service.

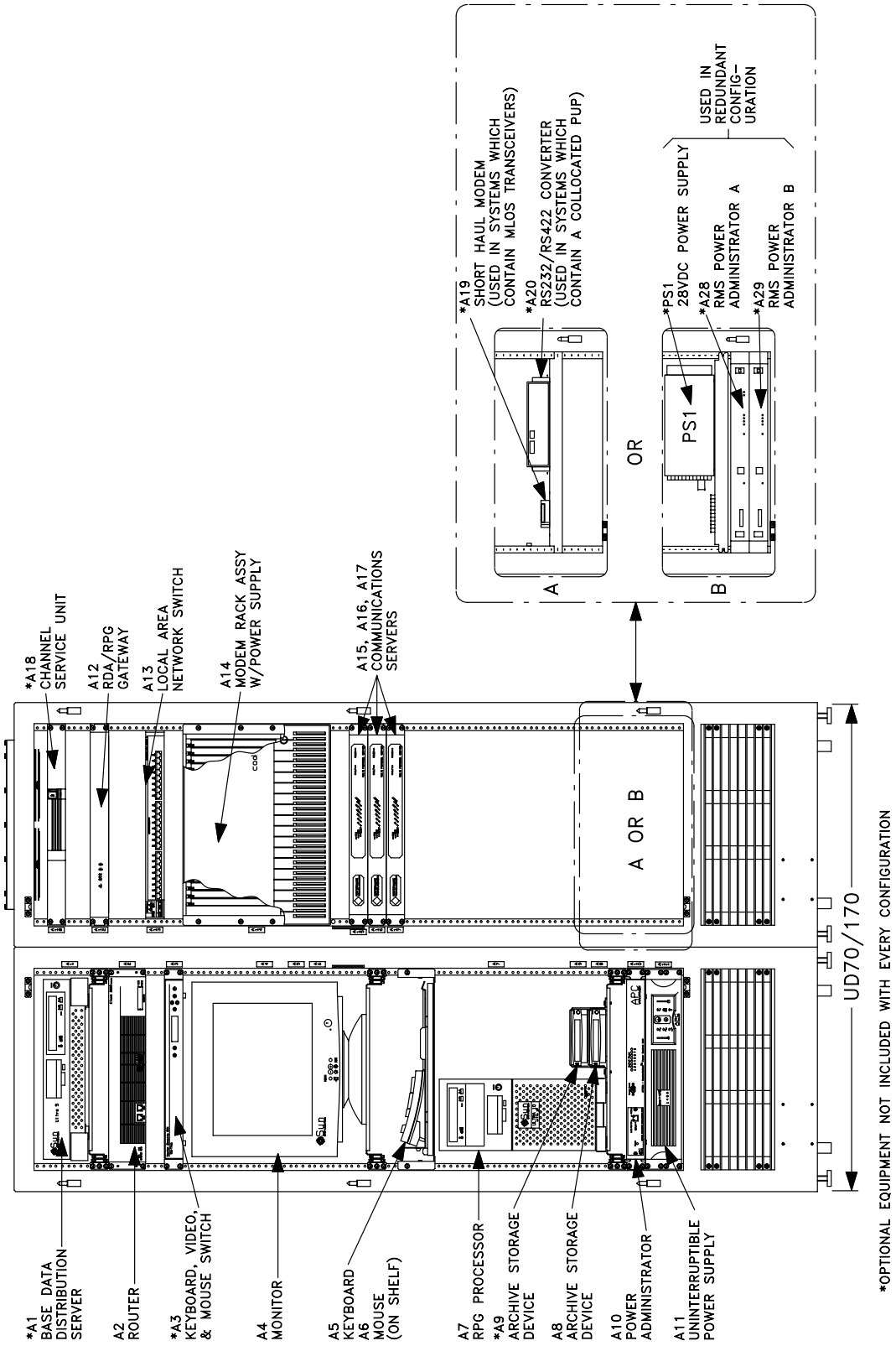

Figure 1–3. RPG Processor/Communications Assembly Cabinet UD70 (Front View) (Sheet 1 of 2)

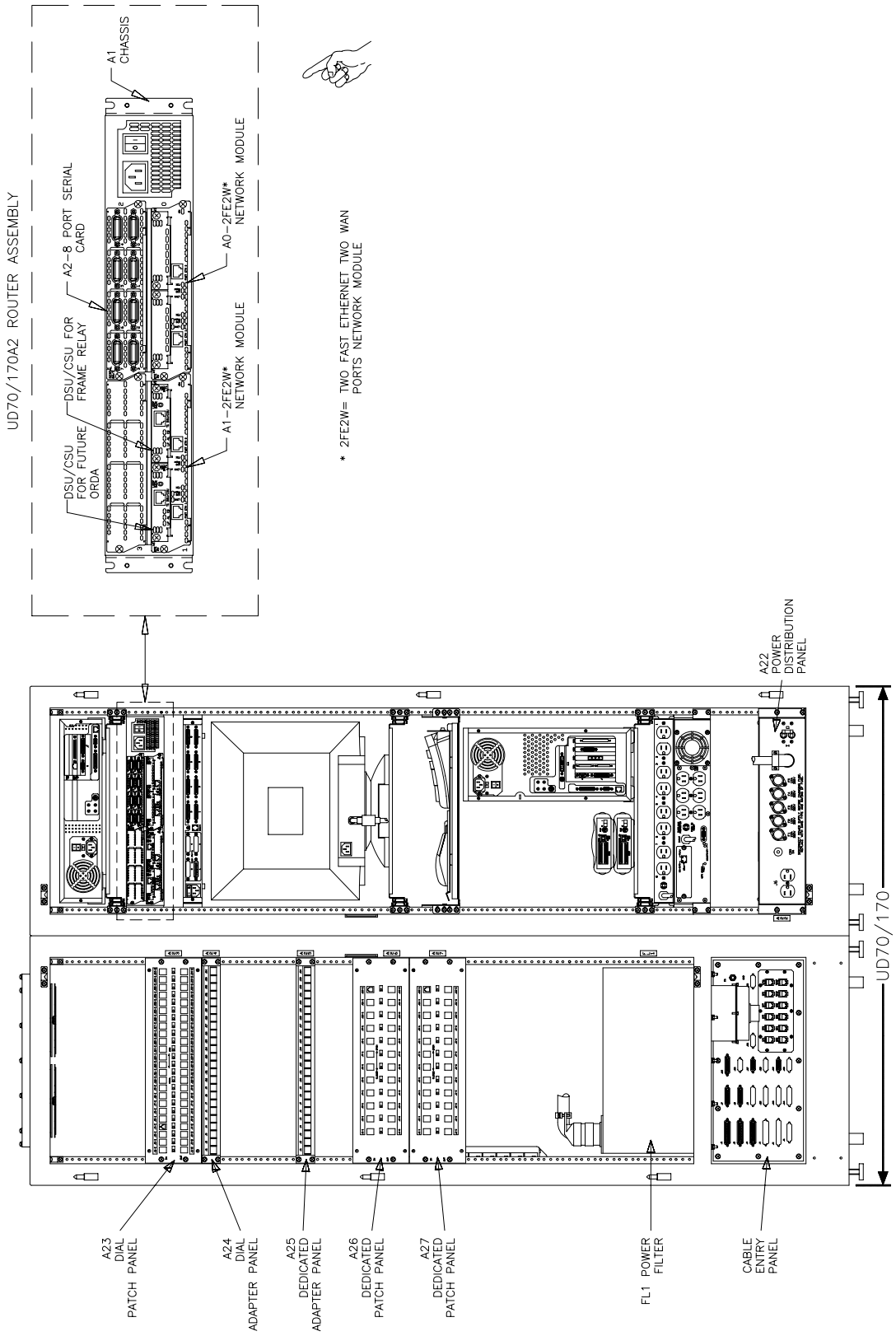

Figure 1–3. RPG Processor/Communications Assembly Cabinet UD70 (Rear View) (Sheet 2 of 2)

1.2.2.2 FAA Unique Equipment. FAA systems have the following unique equipment:

- RMS Power Administrators
- Relay Box

1.2.2.2.1 Baytech RMS Power Administrators. The RMS Power Administrators (UD70A28 and UD70A29) are only provided in FAA RPGPCAs. Two are installed in each RPG channel and they provide individual control of AC power to selected devices (four maximum on each administrator). This allows a device to be powered off and on remotely. Each RMS Power Administrator has four 115 VAC outlet receptacles (15 Amp per receptacle), provides network access (Telnet), and has a EIA232 port for local access. However, unlike the APC Power Administrator, the RMS Power Administrators are not controlled through the LAN or a serial connection to the MSCF processor. Rather, they are controlled through a serial RS–232 connection from the FAA RMS.

1.2.2.2.2 Relay Box. The relay box (UD31) is used only with FAA systems. It is mounted on a wall in the RDA shelter. It contains two relay driver circuits and 60 relays, some of which are not used. The relays switch narrowband communication lines from/to associated and non–associated users to either the Channel 1 or Channel 2 RPG. The relays are controlled by the RPG processors in each RPG channel.

1.2.2.3 Remote RDA Maintenance Terminal (UD32). The Remote RDA Maintenance Terminal UD32 with RDA/RPG Remote Access Terminal (RRRAT) equipment) is used by NWS Redundant sites only and has the following components:

- RRRAT terminal
- RRRAT PC with internal modem, keyboard, and mouse

Communication with the two RDA channels is accomplished via the PC dial modem for RRRAT.

1.2.3 MSCF GROUP EQUIPMENT SUPPLIED.

Refer to the IPB (NWS EHB 6–501) for the component listing for the MSCF Group.

The MSCF Group major subgroups are the MSCF Workstation (UD71) and the Printer Workstation (UD79). This section lists and describes the major components which makes up the MSCF Group (See Figure 1–5).

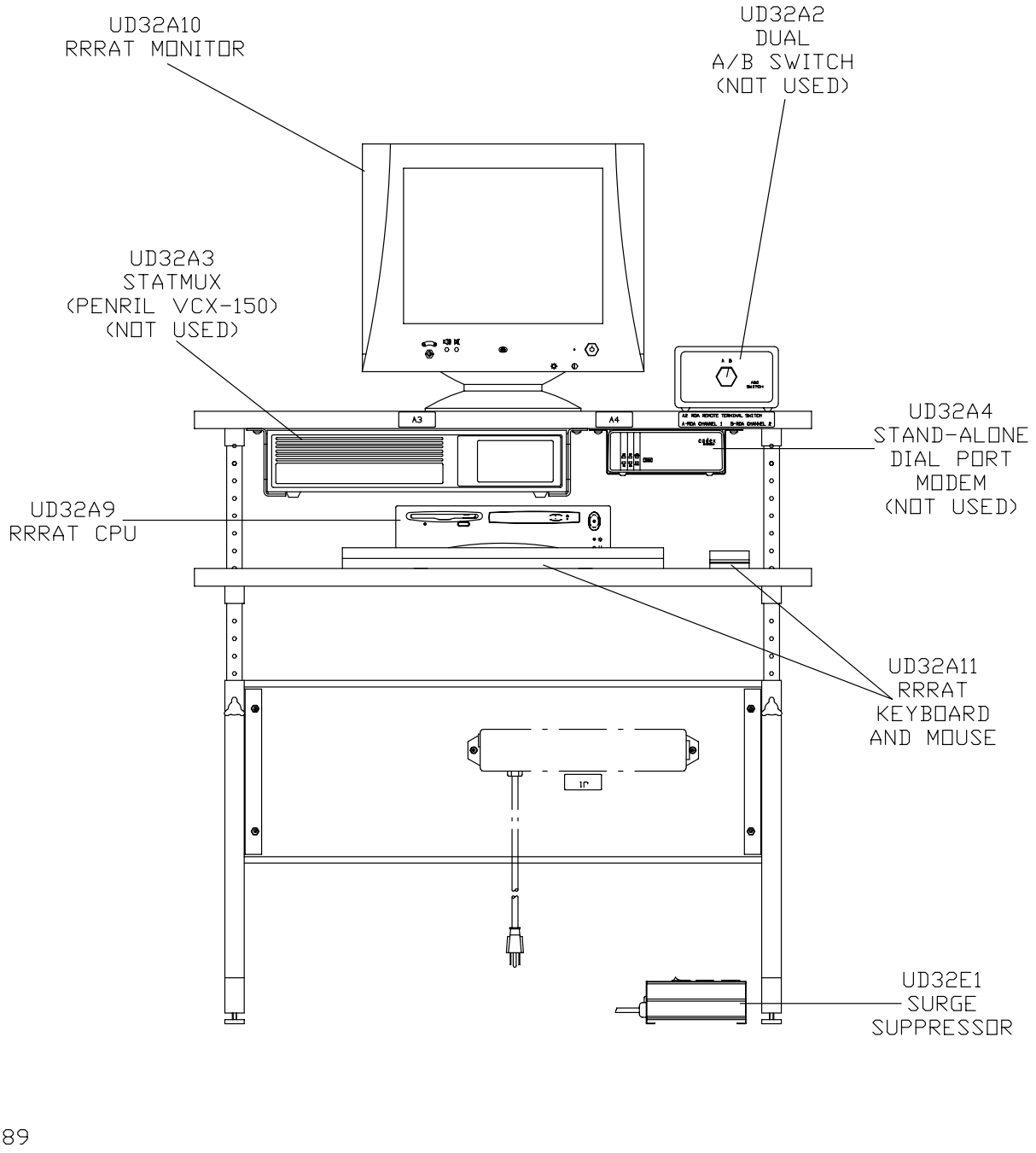

Figure 1–4. Remote RDA Maintenance Terminal UD32 (NWS Redundant) Component Location

1.2.4 MSCF GROUP EQUIPMENT DESCRIPTION.

1.2.4.1 MSCF Group. Each RPG system is provided with MSCF Group equipment that provides an operator interface from which control and monitoring functions are carried out. The Printer and MSCF Workstations are typically found adjacent to each other.

The MSCF Workstation major components are listed as follows:

- MSCF Terminal Suite (Processor, Monitor, Keyboard, and Mouse)
- MSCF Dedicated–port Modem (DoD and FAA only)
- Frame Relay Hub Router (DoD and FAA only)
- Backup Storage Device
- Surge Suppressor

The Printer Workstation major components are listed as follows:

- Color Printer
- Printer Stand

1.2.4.1.1 Sun Ultra 5 MSCF Terminal Suite. The MSCF Terminal Suite consists of a processor UD71A1, monitor UD71A2, keyboard UD71A3, and mouse UD71A4. The MSCF processor is a Sun Ultra 5 workstation. It is a uniprocessor system that uses, as a minimum, an UltraSPARC 400 MHz Processor and 256 MB of RAM. The standard diskette drive (floppy) supports standard 3.5–inch diskettes. A CD–ROM drive is included. The hard drive for the system has a 9.1 GB (minimum) formatted capacity. The monitor for the MSCF Workstation is a Sun 21 inch color monitor. The MSCF Workstation (See Figure 1–5) in operation includes the MSCF Terminal Suite (which supports the operator interface that is necessary to implement the RPG and RDA control and status monitoring functions), a backup storage device, surge suppressor, and the MSCF table. The MSCF Terminal Suite resides on the MSCF table.

1.2.4.1.2 DoD AND FAA MSCF Distant MSCF Communications. The Distant MSCF for DoD and FAA systems communicates via a dedicated narrowband line using dedicated–port modems or CSU/DSU router modules at both the Distant MSCF Workstation and the RPG.

1.2.4.1.3 NWS Local MSCF Communications. The Local MSCF f NWS systems is located in the same building with the RPG. It has a direct TCP/IP link to the Router in the RPG. From the Router, a TCP/IP (in bandwidth) connection goes to the LAN Switch, while a serial (out–of–bandwidth) connection goes to the Power Administrator. The TCP/IP link from the Local MSCF to the Router provides the user an operator–interface from which control and monitoring functions are carried out.

1.2.4.1.4 Xerox/Tektronix Phaser 750 MSCF Color Printer. The MSCF Color Printer (UD79A1) is a laser printer that comes standard with 32 MB of memory. The resolution is a maximum 1200 dpi resolution (600 dpi for color resolution). Printing speed is 5 ppm with color printing, 16 ppm with black printing. There are four (4) toner cartridges, black, cyan, magenta, and yellow. The black cartridge has a 6,000 page capacity, while the remaining color cartridges have a 5,000 page capacity. High capacity cartridges are available. The high capacity black cartridge has a 12,000 page capacity, while the remaining high capacity color cartridges have a 10,000 page capacity.

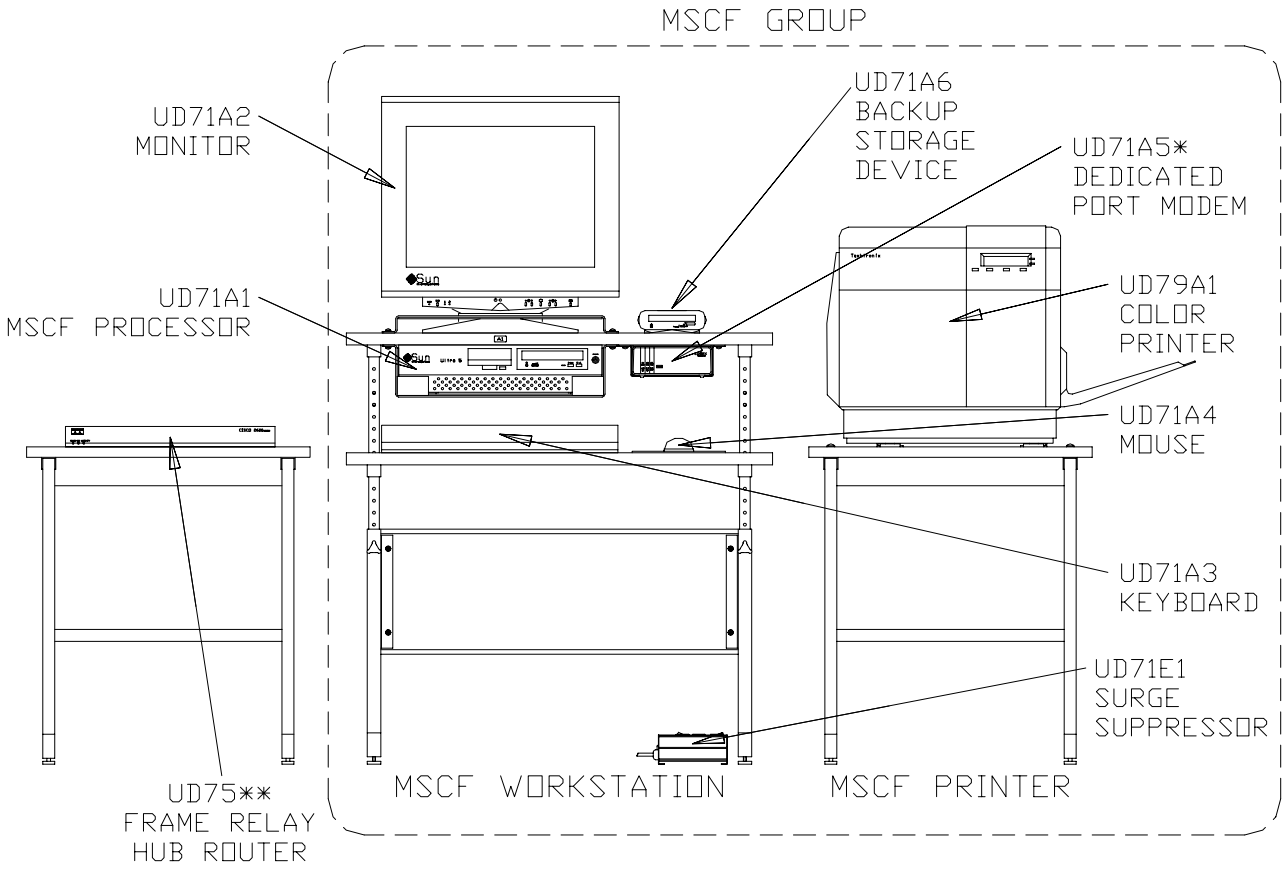

NX2481

Figure 1–5. MSCF Group Component Location

Section 1.3. Software Description

NOTE

This chapter and its corresponding sections refer to the RPGPCA as UD70. Unless otherwise specified for FAA redundant systems, this information also applies to RPGPCA UD170.

1.3.1 RPG GROUP SOFTWARE.

The RPG Group software controls and monitors the operational equipment, maintains the operator/machine interface, and runs the hydrometeorological applications. It consists of Program Software, Commercial Off–The–Shelf (COTS) Software, and Support Software. The RPG Group software consists of the following three separate Computer Program Configuration Items (CPCIs) that identify computer program software used within the WSR–88D system:

- RPG Software Program (CPCI 03)
- RPG COTS Software (CPCI 12)
- RPG Support Software (CPCI 23)

1.3.2 RPG SOFTWARE PROGRAM (CPCI 03).

This CPCI provides an operator interactive computer program in a multiprocessing environment. However, it is possible to perform RPG functions in either a fully–automated or a manually aided mode. The RPG processes radar data to generate products containing information on related meteorological phenomenon. These products can then be stored, archived, and distributed to the users of the WSR–88D. The RPG software program is divided into the following five tasks:

- Acquire Radar Data
- Generate Products
- Distribution Products
- Control System

1.3.2.1 Acquire Radar Data. This function interfaces with the RDA via a bi–directional wideband link to receive base data and to transmit RDA control information. In addition, it provides for the distribution of base data to optional base data users.

1.3.2.2 Generate Products. This function converts base data into meteorological products consisting of base, derived, and alphanumeric products.

1.3.2.3 Distribute Products. This function distributes products to associated and non–associated users, and provides for the on–line storage and archiving of these products.

1.3.2.4 Control System. This function performs system control tasks including RDA control, RPG processing control, system control, WSR–88D Status monitoring, and error detection.

1.3.2.5 CPCI 03 Interface Requirements. This CPCI functionally interfaces with operational position hardware, operational CPCIs, WSR–88D System interfaces, and support CPCIs.

1.3.2.5.1 Hardware Interfaces. The RPG software program runs in a Sun Ultra 10 Processor and peripherals. The hardware interfaces consist of RPG processor(s), mass storage, display terminal, Archive III storage, and communications equipment.

1.3.2.5.2 Operational Computer Program Interfaces. The RPG software program interfaces with the CPCI 01 Radar Data Acquisition Status and Control (RDASC) program, the CPCI 04 product display program, and the operating system software program.

1.3.3 RPG COTS SOFTWARE (CPCI 12).

CPCI 12 includes the COTS Software that is available from the commercial vendors in support of the RPG. This software includes the UNIX Operating System (OS), as well as compiler, router, and communication server software. The UNIX OS is responsible for managing the system environment, scheduling tasks, and providing file management memory allocation services. The other COTS software programs are designed to work within their components.

1.3.4 RPG SUPPORT SOFTWARE (CPCI 23).

The software in this CPCI was developed by the Radar Operations Center (ROC) for testing of the RPG operational software. An example of this software is the load/start scripts.

Section 1.4 Reference Data

NOTE

This chapter and its corresponding sections refer to the RPGPCA as UD70. Unless otherwise specified for FAA redundant systems, this information also applies to RPGPCA UD170.

1.4.1 GLOSSARY OF TERMS.

The glossary of terms is contained at the end of this manual.

1.4.2 EQUIPMENT SUPPLIED.

The equipment that composes the RPG Group is contained in Table 1–2 of the System Manual, NWS EHB 6–500.

1.4.3 STANDARD TOOLS.

The listing of standard tools required for the RPG Group maintenance is contained in Table 1–26 of the System Manual, NWS EHB 6–500.

1.4.4 STANDARD TEST EQUIPMENT.

The listing of standard test equipment required for the RPG Group maintenance is contained in Table 1–27 of the System Manual, NWS EHB 6–500.

1.4.5 SPECIAL PURPOSE TOOLS AND FIXTURES.

The listing of special tools and fixtures required for RPG Group maintenance is contained in Table 1–28 of the System Manual, NWS EHB 6–500.

1.4.6 CONSUMABLES/EXPENDABLES.

The listing of consumables/expendables required for RPG Group maintenance is contained in Table 1–29 of the System Manual, NWS EHB 6–500.

CHAPTER 2

NOT USED

CHAPTER 3

NOT USED

CHAPTER 4
OPERATIONS
Section 4.1. Introduction

NOTE

This chapter and its corresponding sections refer to the RPGPCA as UD70. Unless otherwise specified for FAA redundant systems, this information also applies to RPGPCA UD170.

4.1.1 GENERAL.

Chapter 4 contains brief descriptions of the RPG Group operations, procedures, and controls and indicators to provide the maintenance technician with an understanding of the overall operations and tasks performed in the RPG. Functional descriptions and procedures are provided as an aid in performing fault isolation and troubleshooting. Refer to Chapter 6 for fault isolation procedures when a failure occurs.

4.1.2 CHAPTER ORGANIZATION.

Chapter 4 is organized into nine sections as follows:

- Section 4.1 Introduction
- Section 4.2 MSCF
- Section 4.3 UNIX Operating System
- Section 4.4 Controls and Indicators
- Section 4.5 Startup and Shutdown Procedures
- Section 4.6 Unique Operating System Requirements/Programs
- Section 4.7 Unique MSCF Human Computer Interface Requirements
- Section 4.8 Off–Line Diagnostic Tests
- Section 4.9 Emergency/Recovery Operations.

A description of each section is provided in the following paragraphs.

4.1.2.1 Section 4.1, Introduction. This section provides descriptions of the Chapter 4 sections.

4.1.2.2 Section 4.2, MSCF. This section provides an overview of the makeup and use of the MSCF.

4.1.2.3 Section 4.3, UNIX Operating System. This section discusses the UNIX OS, provides a synopsis of some of the basic UNIX commands, and discusses methods for accessing on–line help in usage of the UNIX OS.

4.1.2.4 Section 4.4, Controls and Indicators. This section provides figures and tables for use in the identification, location, and description of the RPG Group equipment controls and indicators.

4.1.2.5 Section 4.5, Startup and Shutdown Procedures. This section provides a comprehensive set of instructions for bringing the RPG Group to a fully operational state and to a complete shutdown for maintenance purposes.

4.1.2.6 Section 4.6, Unique Operating System Requirements/Programs. This section provides detailed instructions for UNIX based processes (programs) that must be initiated from a command line input (terminal window). These programs deal with software loading, software backup, system reboot, and other possible system administration type functions which may be required on a periodic basis. The majority of these actions are scheduled and will normally be performed by a System Administrator. However, some of these actions may be necessary to troubleshoot/correct system anomalies and could be performed by any operator/maintainer.

4.1.2.7 Section 4.7, Unique MSCF Human Computer Interface Requirements. The MSCF HCI is a Graphical User Interface (GUI) utilizing standard “point and click” manipulation. It is self–explanatory in many cases and detailed on–line help is available. This section will discuss aspects of the HCI which are most important to the maintainer. This includes RDA/RPG control, system restart actions, and collection of status/alarm information.

4.1.2.8 Section 4.8, Off–Line Diagnostics Tests. This section provides detailed instructions for running any off–line diagnostics, whether it be for the processor, or one of the RPG communication peripherals. This includes procedures for loopback testing on the communication servers.

4.1.2.9 Section 4.9, Emergency/Recovery Procedures. This section provides guidance for restoring the RPG Group to normal operation.

Section 4.2. Master System Control Function

NOTES

This chapter and its corresponding sections refer to the RPGPCA as UD70. Unless otherwise specified for FAA redundant systems, this also applies to RPGPCA UD170.

Command entries and mouse selections are shown in **bold** type. Variable names are shown in a unique font (e.g., *variable_name*). Within a command string entry, the variable placeholders are not bold type; however, all portions of the command that are entered exactly as shown are in bold type. The variable placeholder within the command string must be replaced with a name, address, etc. unique to each system. The user is told how to formulate the entry, or directed where to find this information. Since the keyboard in use may have either an "Enter" key or a "Return" key, the end of the command line is delineated with a **<CR>**. Unless stated otherwise, each command line shown must be "entered" to be processed. Also, directory names/paths shown outside of a command example are *italicized* for clarity purposes.

For mouse selections, the word "click" is a standard single click of the left mouse button. The word "drag" is a standard left mouse click and hold while moving the mouse pointer at the same time. Dragging can be used to move a window, highlight text, or make a menu selection. The symbol ▶ is used to indicate subsequent left clicks through sub–menu selections. When a right, middle, or double–click is required, it is specifically indicated.

4.2.1 INTRODUCTION.

The MSCF hardware consist of a Sun Microsystems Ultra 5 computer, an external Jaz disk drive, color printer, and a 21–inch monitor with a keyboard and mouse. DoD and FAA MSCF hardware includes a Frame Relay Hub Router. The MSCF is connected to the RPG processor in a variety of different configurations and is used to control the WSR–88D system including mode selection, modification of RPG adaptation data, setting of product generation list, control of communications lines, archive functions, monitoring of RPG and RDA status, alarm, and performance data, and performing maintenance functions. The software used to exercise this control is the RPG HCI. The Jaz disk is used for MSCF software backups. This section describes the various MSCF configurations, the terminal display, and some unique keyboard and mouse functions.

4.2.2 MSCF CONFIGURATIONS.

To meet the unique needs of the various WSR–88D field sites, there are two different configurations of the MSCF called Local and Distant. Each contains a device in the RPG cabinet called a Router which also provides out–of–bandwidth communications to the MasterSwitch for power control. The following paragraphs describe each configuration.

4.2.2.1 Local MSCF. The Local MSCF configuration is a cable connection from the RPG Router to the MSCF processor located locally within the same building. This is a typical NWS configuration. From the RPG Router, a serial connection to the MasterSwitch provides power control of each device.

4.2.2.2 Distant MSCF. The Distant MSCF configuration is a connection from the RPG Router to the MSCF processor through dedicated modems or CSU/DSU router modules dedicated for frame relay service when the MSCF is located in another building some distance away from the RPG. This is a typical DoD and FAA configuration. Most, but not all, DoD and FAA sites will use frame relay service. Where frame relay service is used, the Frame Relay Hub Router UD75 supports frame relay circuits that have replaced X.25 dedicated analog circuits that were being overdriven. These circuits are used to send radar products (RPS data) to AWIPS and to control and command DoD and FAA radars (MSCF data). Frame relay service also supports One Time Requests (OTR) from DoD and FAA radars via the AWIPS WAN. Frame relay service equipment consists of the Frame Relay Hub Router UD75 located at the NWS Weather Offices controlling DoD and FAA radars and a CSU/DSU module installed in all RPG Routers. From the RPG Router, a serial connection to the MasterSwitch provides power control of each device.

4.2.3 DISPLAY.

The RPG Applications Software and other graphical applications are displayed on the MSCF terminal in a format that is used universally by many different computer vendors called the Common Desktop Environment (CDE). This section contains descriptions of these various displays.

4.2.3.1 CDE. CDE is a GUI that was designed to make using UNIX easier. It automatically starts at boot up and is configured to run in a multi–user, networked environment. To help organize and manage work, CDE provides windows, workspaces, controls, menus, and the Front Panel.

4.2.3.1.1 Windows. Windows contain software applications and are framed with controls that allow the user to move them, re–size them, or place them in other workspaces.

4.2.3.1.2 Workspaces. Workspaces are the areas of the screen where the windows are placed.

4.2.3.1.3 Controls. Controls enable object manipulation, typing of information, or choice selection. A detailed description of the RPG HCI window controls is found in paragraph 4.2.3.2.9.

4.2.3.1.4 Menus. Menus contain commands that are used to manage windows and operate applications including the customized Workspace Menu which is described in paragraph 4.2.3.2.10.

4.2.3.1.5 Front Panel. The Front Panel is a small horizontal window at the bottom of the display in every workspace that contains a collection of controls representing frequently used applications. See Figure 4–1.

Figure 4–1. CDE Front Panel

The Front Panel can be customized, but by default contains the controls listed below. The following terms are used to describe the functions of the Front Panel controls:

Indicator	What the image of the control represents.
Click	What happens when the control is clicked on once with the left mouse button.
Drop	What happens when a file or folder is dragged and dropped onto the control.

EPSS (Electronic Performance Support System)

Indicator: Represents the presence of the EPSS program on the system.

Click: Starts the EPSS.

Clock

Indicator: Displays the current time.

Click: Starts the default web browser.

Calendar

Indicator: Displays the current date.

Click: Starts the Calendar application. If the Calendar application is already running, it's window is raised to the top of the window stack.

Drop: Schedules the dropped appointment on the correct date in the calendar.

File Manager

Click: Opens a File Manager view of the home folder.

Drop: Opens a File Manager view of the dropped folder.

Personal Applications (Text Editor)

This control position is reserved for a personal application of the users choice. A personal application can be placed here by first installing the application's icon into the Personal Applications subpanel, and then using the control's popup menu to place that icon on the front panel.

Click: Starts the application that is represented by the icon on the front panel. The icon displayed and discussed here is the Text Editor.

Drop: Opens the dropped file in a new Text Editor window.

Mailer

Indicator: Indicates the arrival of new mail.

Click: Starts the Mailer. If the Mailer is already running, it's window is raised to the top of the window stack.

Drop: Opens the dropped file's contents in the Mailer's Compose window.

Lock

Click: Locks the workstation, preventing unauthorized input.

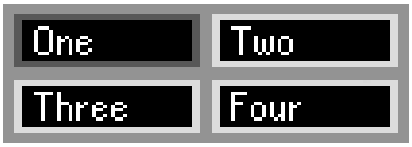

Workspace Switch

Indicator: Indicates which workspace is currently being displayed.

Click: Displays other workspaces or allows the user to rename the current workspace.

Progress Indicator

Indicator: Spins when the system is running an action.

Click: Opens the Action: Go... window.

Exit

Click: Logs the user out of the current session.

Default Printer

Click: Opens the Printer Jobs window which displays the status of the default printer, and lets the user cancel print jobs on that printer.

Drop: Prints the dropped file on the default printer.

Style Manager

Click: Starts the Style Manager application. If the Style Manager application is already running, it's window is raised to the top of the window stack.

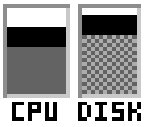

Performance Meter

Indicator: Indicates the amount of activity on the Central Processing Unit (CPU) and the system disk.

Click: Opens the Performance Meter window.

Help Manager

Click: Opens a Help Viewer displaying the top level of help information.

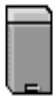

Trash Can

Indicator: Looks full if it contains deleted files or folders.

Click: Opens the Trash Can window. If the Trash Can window is already opened, it is raised to the top of the window stack.

Drop: Moves the dropped file or folder to the Trash Can.

Up Arrows

Indicator: Indicates that the Front Panel control immediately below the Up Arrow has an expandable Subpanel.

Click: Opens the Subpanel of the Front Panel control immediately below the arrow and displays it immediately above the arrow. The Up and Down Arrows alternately occupy the same space on the Front Panel. Once an Up Arrow is clicked it becomes a Down Arrow, and once a Down Arrow is clicked it becomes an Up Arrow.

Down Arrows

Indicator: Indicates that the Front Panel control immediately below the Down Arrow has an expanded Subpanel displayed immediately above the arrow.

Click: Closes the Subpanel of the Front Panel control immediately below the arrow. The Up and Down Arrows alternately occupy the same space on the Front Panel. Once a Down Arrow is clicked it becomes an Up Arrow, and once an Up Arrow is clicked it becomes an Down Arrow.

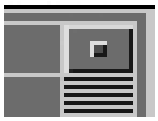

Minimize Button

Click: Minimizes the Front Panel making it an icon that is labeled with the name of the current workspace.

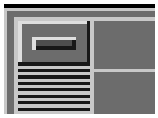

Window Menu Button

Click: Displays the Window Menu of controls that are available for the Front Panel. The items in this Window Menu are used to control the Front Panel.

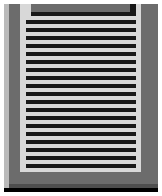

Move Handles (Located at both sides of the Front Panel)

Click: On either handle and hold down the mouse button to drag the Front Panel and move it to a new location and then release the mouse button.

For more information about the CDE Front Panel, Subpanels, or Controls, click on the Help Manager's up arrow on the Front Panel and then click on Front Panel Help on the Subpanel.

4.2.3.2 Graphical RPG Applications Software. The RPG Applications Software contains a GUI to make the operation of the system easier for the user. It provides windows, icons, buttons, indicators, color–coding, warning_popups, password protection, controls, and the Workspace Menu. The RPG Application Software process that provides these tools to the user is called the RPG HCI.

4.2.3.2.1 RPG Human–Computer Interface. The RPG HCI runs within the RPG Applications Software and interfaces the user to the RPG computer system. The RPG HCI is what actually displays the RPG Status/Control window, commonly called the RPG Main Menu, see Figure 4–2. This window gives the user an overall graphical representation of the current status of the system and provides links to other windows.

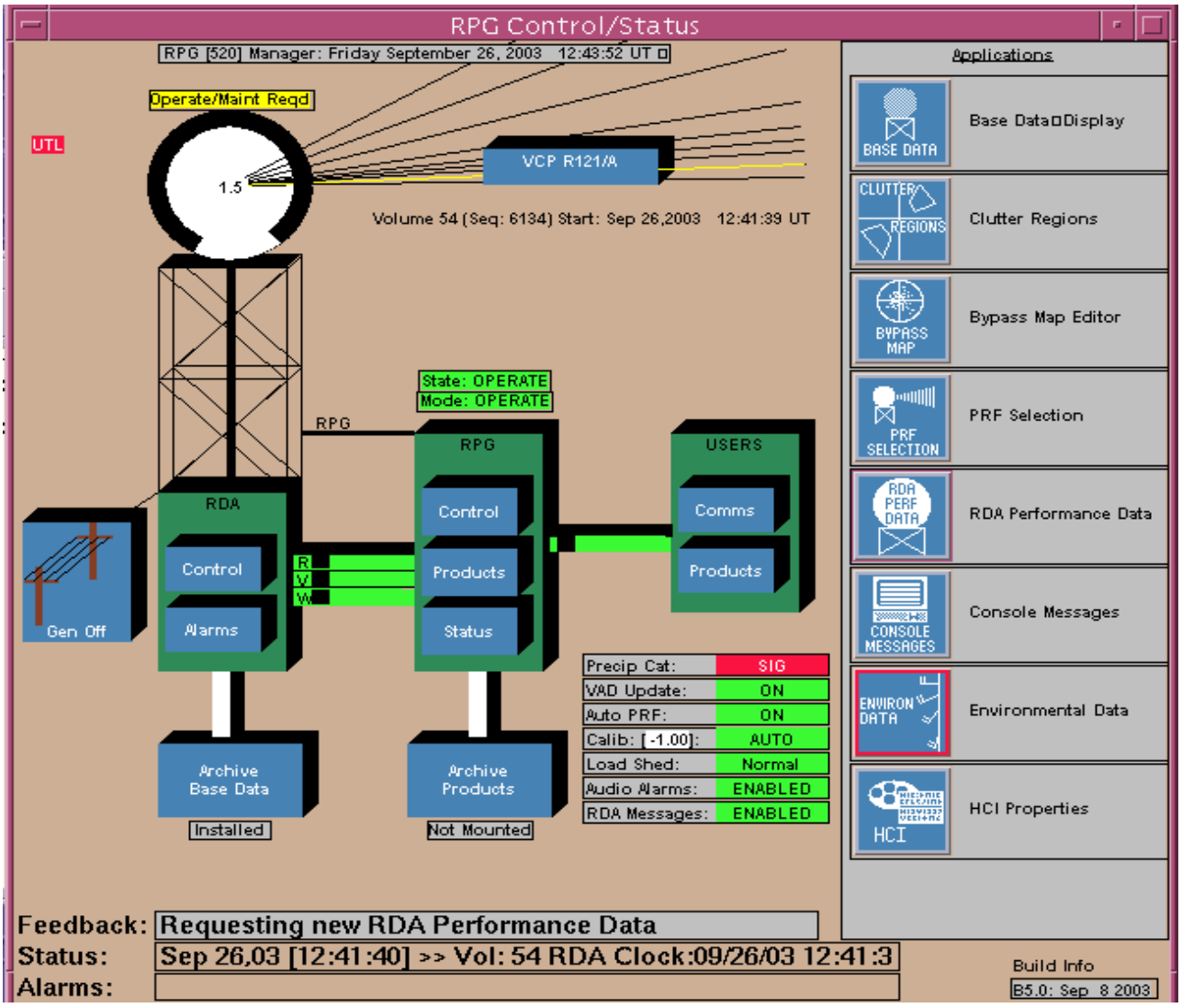

Figure 4–2. RPG Control/Status Window

4.2.3.2.2 Windows. Windows are smaller framed areas within the workspace display that contain different RPG Applications Software menus and are opened when the user clicks on the appropriate icon or button. A window's name is displayed in the title bar at the top of the window. Multiple windows can be opened at the same time, but only one window at a time can be active. When a window is active, or ready for use, it comes to the foreground or the top of the window stack to become fully visible, and it's frame is highlighted in a different color than an inactive window. To change the active window from one window to another, simply click anywhere within an inactive window. However, to avoid making an unwanted selection at the same time, it is suggested to click somewhere in the inactive window that does not contain any buttons or icons, like the title bar.

4.2.3.2.3 Icons. In an RPG HCI window, icons are small graphical representations, or pictures that either symbolize other windows or individual components of the WSR–88D system. Some

RPG HCI windows can be minimized which essentially turns them into icons and places them to the left side of the screen and gives them a label of RPG HCI with the title of the window displayed within the icon. A good example of the use of icons in the RPG Applications Software is on the RPG HCI Main Menu, see Figure 4–2. The Tower, Radome, RDA, and RPG icons simply represent the existence of these components in the WSR–88D configuration, and clicking on any of these icons doesn't do anything. However, on the right hand side of the window is an area called Applications that contains several icons that symbolize other windows that are used frequently in the everyday operations and maintenance of the system, and clicking on any of these icons opens up its associated window.

4.2.3.2.4 Buttons. Buttons are contained within the RPG HCI windows and are used to either execute commands or select different configuration options. They are typically labeled with the name of the associated command or configuration option. Throughout the RPG HCI windows, several different types or styles of buttons are present. Generally speaking, clicking on a button executes a command.

4.2.3.2.5 Indicators. An indicator is used to simply display information and it offers no further functionality to the user. A few examples of where indicators are used in the RPG HCI windows are the Volume Coverage Pattern (VCP) elevation angle display, the antenna azimuth position display, the system status line (directly above the radome) on the RPG Status/Control window, and the RDA status information that is displayed in the bottom portion of the RDA Control window. Clicking on an indicator doesn't cause anything to happen.

4.2.3.2.6 Color–coding. Different colors are used throughout the various windows of the RPG HCI to indicate different categories, deltas, selections, and statuses, along with the traditional use associated with meteorological data. Within some windows, the same item may have the capability of being displayed in two or more different colors. This makes it much easier for the user to see when a change has occurred within a window as opposed to simply changing some text. For example, on the RPG Status/Control window, see Figure 4–2, there is a Status Area near the lower right hand corner of the window that includes a line called Precip Cat. Depending on the category of precipitation detected by the radar, this line can display the word NONE in green, LIGHT in yellow, or SIG in red. More specifics of color–coding and how it is used in the RPG HCI are included in the detailed descriptions of each individual window that can be found in Section 4.7.

4.2.3.2.7 Warning_popups. Any time the user clicks on an RPG HCI button that represents a command that will make a change to the system, prior to that command being executed or that change being implemented, a warning_popup window appears. See Figure 4–3. This window essentially serves to remind the user of the selection that was just made, and inform the user how the system will change. When appropriate, it will also inform the user when the change will not take effect until the beginning of the next volume scan. Some of these warning_ popup windows require the user to decide whether to continue with the change or cancel the selection entirely by clicking on a **Yes** or **No** button to answer the question "Do you want to continue?". In this type of warning_popup window, the **Yes** button is outlined by default which means that it can be selected by simply pressing the **<CR>** key. The **No** button can either be clicked on to be selected, or the user can press the **<Tab>** key to move the outline over to the **No** button and then press the **<CR>** key. When the **No** button is selected, the warning_popup window disappears, and the user is returned to the previous window without the system executing any commands or implementing any changes.

When the **Yes** button is selected, the warning_popup window disappears and the previously selected command is then executed or the previously selected change is then implemented. Another type of warning_popup window that is used simply requires the user to click on a **Continue** button to proceed with the command or change. Once the user makes a selection within a warning_popup window, that window closes automatically.

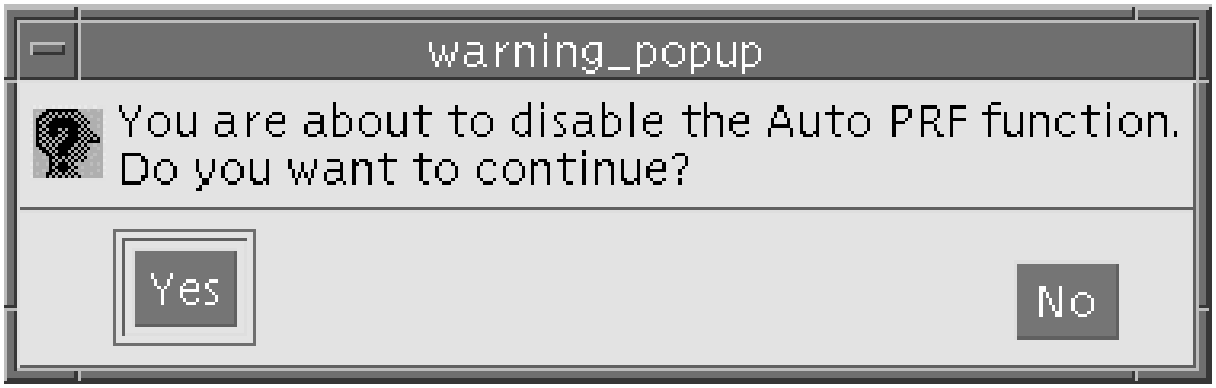

Figure 4–3. Warning_popup Window

4.2.3.2.8 Level of Change Authority (LOCA) Password Protection. Some RPG HCI windows contain adaptable parameters that are password protected. When one of these windows is opened it has a button in the upper right hand corner that contains a graphic of a black lock in the locked position. Clicking on the lock button opens up the Password Window. See Figure 4–4. In the middle of the Password window is an area entitled LOCA that contains a selection of the level of users that are permitted to edit the associated window. The possible selections are as follows:

- **Agency** (NWS, DoD, FAA)
- **ROC**
- **URC** (Unit Radar Committee)

Clicking on any of these selections does two things. First, the selection becomes active as indicated by the button filling in and the selection becoming outlined. Second, it changes the display of the adaptable parameters data within the associated window. All of the numbers that are now highlighted are the adaptable parameters that the selected LOCA can obtain permission to change. To actually obtain permission to make any changes in those areas, the user must click on the Password field and then enter the correct, case sensitive, password for that LOCA and press **<CR>**. If an incorrect password is entered, a warning_popup window appears that informs the user that an invalid password has been entered. Once the **Continue** button in the warning_popup window has been clicked on, the user is then returned to the Password window where the Password field is highlighted and ready for input. When the correct password is entered, the Password window closes and the user is returned to the associated window where the adaptable parameters that can be changed are now highlighted in blue. Also, the lock button now contains a graphic of a red lock in the unlocked position along with the LOCA that unlocked it. Once a window is unlocked, the adaptable parameters within that window can be modified and saved. To lock the window back, the user may either click on the lock button again, or simply close the window. When that window is opened again, it is locked by default, and it contains all of the changes that were previously saved.

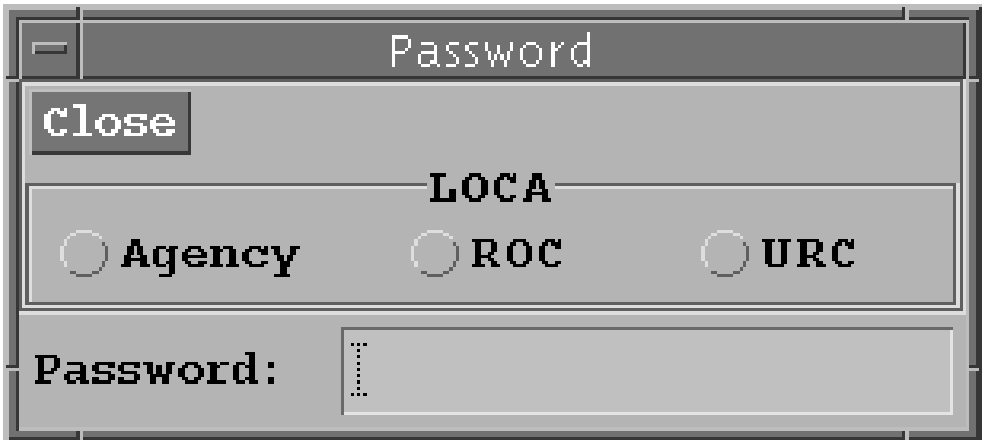

Figure 4–4. Password Window

4.2.3.2.8.1 LOCA Password Change. Clicking on the **Passwords** button in the HCI Properties Manager window opens up the Change Passwords window. See Figure 4–5. This window is used to change the LOCA passwords that unlock the RPG HCI windows containing site specific adaptation data allowing the data to be changed by authorized personnel. The LOCAs, also called Users, are listed below and each has a different password and permission level.

- **Agency** (NWS, DoD, FAA)
- **ROC**
- **URC**

The maximum password length allowed when changing passwords with the HCI Properties Manager is 16 characters. To change any of these passwords, simply click on a LOCA to select it, enter the old password in the Old Password field, enter the new, case sensitive, password in the New Password field, and then enter the new password again in the Verify New Password field. A warning_popup window appears that states “The password has been changed!”. Clicking on the **Continue** button then closes the warning_popup window. Clicking on the **Close** button closes the Change Passwords window.

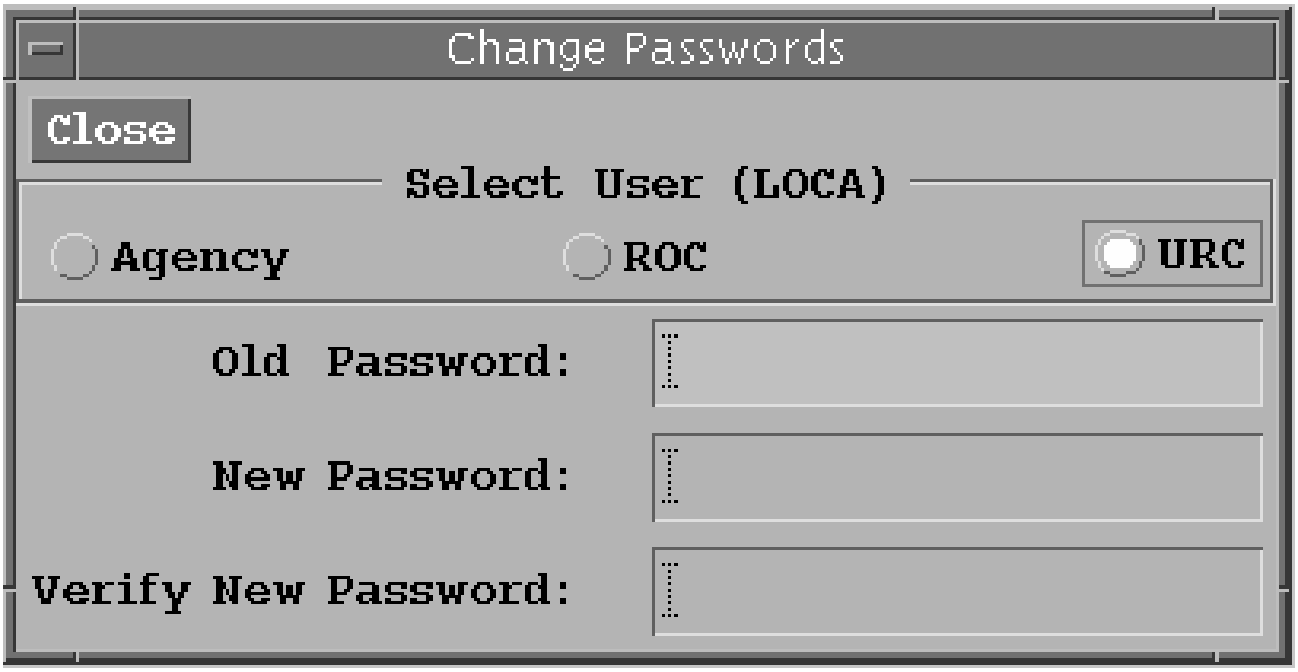

Figure 4–5. Change Passwords Window

4.2.3.2.9 Controls. All of the RPG HCI windows, including those that may have been minimized into icons, contain controls that allow the user to manipulate them in a variety of ways. Some controls are also imbedded within the window frame for easier use with the mouse. All controls are listed and described below, but not all of them are available in every RPG HCI window. Clicking (left or right) on the Window Menu Button in the upper left hand corner of the RPG HCI window frame, or icon if the RPG HCI window has been minimized, displays a menu of controls that are available for that specific window or icon. The right click can be done anywhere on the window frame or icon and does not turn an inactive window or icon into an active one. See Figure 4–6, RPG HCI Window Menu Controls. Controls that are greyed–out can only be selected under certain conditions and are not currently available. Changes made to RPG HCI windows using these controls are temporary and only last until the window is closed. Any time an RPG HCI window is opened, it uses a set of default control settings.

1. Restore – Restores a window to its previous size and location if it had been maximized. This also restores an icon back to a window of its previous size and location. This appears greyed–out if the window is not maximized or minimized. The same functionality exists by either double–clicking on an icon, or by clicking on the Maximize Button a second time.

2. Move – This places a mouse pointer in the center of the window or icon, and then by moving that pointer with the mouse, it allows the user to move the window or icon to another location on the same workspace display. A thin outline of the window or icon frame is displayed to assist the user until it is placed in its new location by clicking on the left or right mouse button. The same functionality exists by either dragging the title bar of a window or by dragging anywhere on an icon.

3. Size – For the RPG HCI windows that allow it, this places a mouse pointer in the center of the window, and then by using the mouse to move the pointer outside the frame of the window, it allows the user to change the size of the window. A thin outline of the new window frame is displayed to assist the user until it is placed in its new position by clicking on the left or right mouse button. The same functionality exists by dragging any of the four corners or four sides of the window frame. This is greyed–out if the window is minimized. However, many of the RPG HCI windows have fixed sizes and do not allow this type of control even when this doesn't appear greyed out. In addition, some of the RPG HCI windows that do allow this do not resize the text within the window to fit the new frame size. So, if the user makes an RPG HCI window smaller, then some of the text may not be displayed. Except for the RPG HCI windows that do fully support this type of control, like the RPG Status/Control window, it is better that the user doesn't change the size of any RPG HCI windows.

4. Minimize – For the RPG HCI windows that allow it, this turns the window into an icon. The icon is placed on the left side of the screen and given a label of RPG HCI with the specific name of the RPG HCI window displayed within the icon. This is greyed–out if the window has already been minimized. The same functionality exists by clicking on the Minimize Button which is the second button from the right in the upper right hand corner of the window frame. To restore the window to its previous size and location, the user can either double–click on the icon, or select Restore from the icon's RPG HCI Window Menu.

5. Maximize – For the RPG HCI windows that allow it, this enlarges the window or icon to its greatest programmable size. This is greyed–out if the window has already been maximized. Some RPG HCI windows can be enlarged to fill the entire size of the terminal display while others have a fixed size and can not be enlarged. The same functionality exists by clicking on the Maximize Button in the upper right hand corner of the window frame. To restore the window to its previous size, either click on the Maximize Button again, or select Restore from the RPG HCI Window Menu.

6. Lower – If other windows or icons are on the workspace, this moves them to the background, or lowers them to the bottom of the window stack. This does not cause an active window or icon to became inactive. To bring the window or icon back to the foreground, or raise it to the top of the window stack, simply click anywhere on its frame or title bar. Similar functionality exists by simply clicking anywhere on or inside the frame of another window or icon. However, this action moves the newly selected window or icon to the top of the window stack and makes it active. The previously active window or icon does not drop all the way down to the bottom of the window stack, but just one level directly underneath the newly active window.

7. Occupy Workspace... – Allows the user to select the workspace(s) in which an icon or window is displayed. Clicking on it opens up the Occupy Workspace dialog box, See Figure 4–7, which is described below. Only one dialog box can be opened at a time. Attempting to open a second one automatically closes the first one.

a. Window:/Icon: – Displays the name of the window or icon that the Occupy Workspace dialog box originated from and applies to.

b. Workspaces: – Lists the name(s) of the available workspace(s) from which the user may select. When the Occupy Workspace dialog box initially opens, the name(s) that are already highlighted indicate the name(s) of the workspace(s) where the window or icon is already being displayed. To select a single workspace, simply click on its name and it becomes highlighted if it wasn't already, and if other workspace names were already highlighted they become unhighlighted. To select more than one workspace, either click and drag the mouse over contiguous workspace names, or hold down the **<Ctrl>** key while clicking on discontiguous workspace names.

c. All Workspaces – When clicked on once, a check mark is placed in the box and all of the workspace names become highlighted indicating that the window or icon will be displayed in all workspaces. The same functionality exists by selecting Occupy All Workspaces from the RPG HCI Window Menu. When clicked on again, the check mark is removed from the box, and only the top name on the list is highlighted.

d. OK – Applies the currently selected workspace settings and closes the dialog box.

e. Cancel – Restores the previous workspace settings and closes the dialog box.

f. Help – Displays the Occupy Workspace Dialog Box help topic within the Workspace Manager – Help window.

8. Occupy All Workspaces – Displays the window or icon in all workspaces.

9. Unoccupy Workspace – Removes the window or icon from the current workspace. This is greyed–out if the window or icon is only present in the current workspace.

10. Close – Closes the window or icon, removing it from the workspace. The same functionality exists by double–clicking on the Window Menu Button in the upper left hand corner of the window frame.

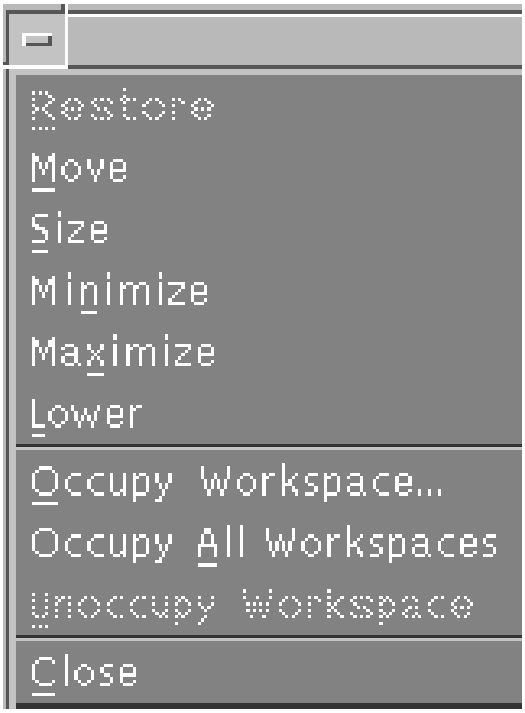

Figure 4–6. RPG HCI Window Menu Controls

Figure 4–7. Occupy Workspace Dialog Box

4.2.3.2.10 Workspace Menu. The Workspace Menu is a list of items described below that are used to manage the workspace and also contains submenus which are used for starting applications and other workspace functions, some of which can also be invoked from the Front Panel or its subpanels. The Workspace Menu, See Figure 4–8, is available in all workspaces, and is opened by right clicking anywhere on the workspace background. An arrow next to a menu item indicates that the item has a submenu. To open a menu item's submenu, simply click on the arrow. Clicking on any Workspace Menu or submenu item selects the item and closes the Workspace Menu. To close the Workspace Menu without selecting an item, move the mouse pointer anywhere off of the menu and click. The Workspace Menu can be customized to better fit the needs of the user.

1. Applications – Displays a submenu from which all available desktop applications can be started.

2. Cards – Displays a submenu from which the Address Manager can be started. The same functionality exists by clicking on the Calendar ▶ Find Card control on the CDE Front Panel.

3. Files – Displays a submenu from which the File Manager and other file applications can be started. Similar functionality exists by clicking on the File Manager control's up arrow on the CDE Front Panel.

4. Folders – Displays a submenu from which which all available folder applications can be started. The same functionality can be found in the File Manager and the Trash Can subpanels on the CDE Front Panel.

5. Help – Displays a submenu from which several help applications can be started. Similar functionality exists by clicking on the Help Manager control's up arrow on the CDE Front Panel.

6. Hosts – Displays a submenu from which all available hosts applications can be started. Similar functionality exists by clicking on the Performance Meter control's up arrow on the CDE Front Panel.

7. Links – Displays a submenu from which several web applications can be started. Similar functionality exists by clicking on the Clock control's up arrow on the CDE Front Panel.

8. Mail – Displays a submenu from which all available mail applications can be started. The same functionality can be found by clicking on the Mailer control's up arrow on the CDE Front Panel.

9. Tools – Displays a submenu from which all available tools applications can be started. Similar functionality exists by clicking on the Style Manager control's up arrow on the CDE Front Panel.

10. Windows – Displays a submenu from which all available window controls can be accessed.

11. Add Item to Menu – Begins the process of adding an item to the Workspace Menu.

12. Customize Menu – Begins the process of customizing the Workspace Menu.

13. Lock Display – Prevents input from the keyboard or mouse until the display is unlocked with an authorized password. The same functionality exists by clicking on the Lock control on the CDE Front Panel.

14. Suspend System – Begins the process of suspending the system.

15. Log out – Begins the log out process. The same functionality exists by clicking on the EXIT control on the CDE Front Panel.

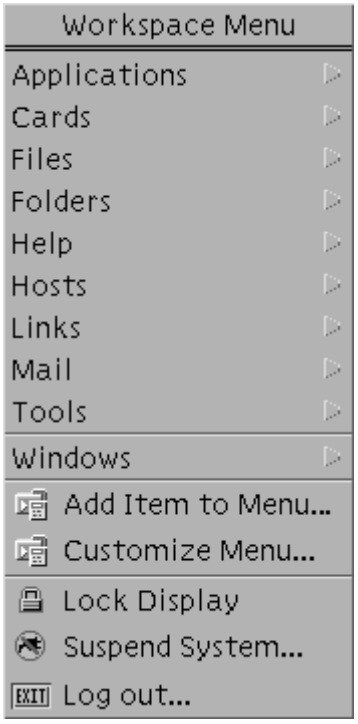

Figure 4–8. Workspace Menu

4.2.3.3 Other Graphical Applications. In addition to the RPG Applications Software HCI, several other graphical applications are available in the CDE. These applications are commonly used by the maintenance technician, system operator, and system administrator to configure, administer, and monitor specific components of the system, as well as to provide answers to some of the more common questions regarding Solaris. This section contains information about Admintool, AnswerBook2, Netscape, (for LAN Switch, Router, and the APC MasterSwitch), and PowerChute PLUS. The following paragraphs include a general explanation of each of these applications, along with a brief description of how to start and stop each one, but do not include the details of how to operate or interpret their displays.

4.2.3.3.1 Admintool. Admintool is a GUI available only to the system administrator that was designed to make system management easier. It is standard with all Solaris systems and is used to add, delete, or modify user accounts, groups, hosts, printers, serial ports, and software. It makes the appropriate changes to the system's files automatically verses manually. To start Admintool, the system administrator enters **admintool&<CR>** from the # prompt. The & directs it to run in the

background keeping the window that it was started from available for use. A new window appears on the screen with the default title of Admintool: Users. To stop Admintool, either click **File ▶Exit** from the Admintool window, double–click on the Window Menu Button in the upper left hand corner of the Admintool window frame, or click on the Window Menu Button **▶Close** selection. On–line help is provided by clicking on the **Help** selection within the Admintool window.

4.2.3.3.2 AnswerBook2. The AnswerBook2 GUI is an on–line library of information about the Solaris OS. It is available to all users and is helpful for finding answers to questions that might not be in the man pages or the Help Manager. It can be started to run either with its own navigator or on the Netscape network browser. To start AnswerBook2 with its own navigator, right click anywhere on the workspace background to display the Workspace Menu. Then click on **Programs ▶ AnswerBook...** A new window appears on the screen with the title of AnswerBook Navigator v3.6.1 build_21. To stop the AnswerBook Navigator, either click on the Window Menu Button **▶Close** selection, or double–click on the Window Menu Button in the upper left hand corner of the AnswerBook Navigator window. To start AnswerBook2 on the Netscape network browser, click on the CDE Front Panel up arrow immediately above the Help Manager icon to open the Help Manager subpanel, then click on the AnswerBook2 selection. A new window appears on the screen with the title of Netscape: AnswerBook2: Personal Library. To stop AnswerBook2 in Netscape, either click **File ▶Exit** from within the Netscape: AnswerBook2: window, double–click on the Window Menu Button in the upper left hand corner of the Netscape: AnswerBook2: window, or click on the Window Menu Button **▶Close** selection. On–line help is provided for AnswerBook2 when using Netscape by clicking on the **?** (Help) selection within the Netscape: AnswerBook2: window.

4.2.3.3.3 Netscape. The Netscape GUI is the RPG's default network browser. It is available to all users and is used primarily to assist in configuring the LAN Switch, Router, and the APC MasterSwitch. To start the Netscape graphic display, simply click on the CDE Front Panel clock icon. A new window appears on the screen with the name Netscape: (Home Page Name) on the title bar. To stop Netscape, click **File ▶Exit** from within the Netscape: window, double–click on the Window Menu Button in the upper left hand corner of the Netscape: window frame, or click on the Window Menu Button **▶Close** selection. On–line help is provided for Netscape by clicking on the **Help** selection within the Netscape: window near the upper right hand corner.

4.2.3.3.4 PowerChute PLUS. The PowerChute PLUS GUI is only available to the system administrator and is used to monitor the performance of the RPG's Smart UPS. To start it, the system administrator simply enters **/usr/lib/powerchute/xpowerchute&<CR>** from the # prompt. The & directs it to run in the background keeping the window that it was started from available for use. A new window appears with the title of PowerChute PLUS. Then, within that window, another window appears with the name Monitor Server. In the Monitor Server window, either select the desired Smart UPS and then click on the **OK** button, or double–click on the desired Smart UPS. Next, within the Monitor Server window, another window appears with the name Password. In the Password window, enter the appropriate password and click on the **OK** button. To stop PowerChute PLUS, click **System ▶Exit** from within the PowerChute PLUS window, double–click on the Window Menu Button in the upper left hand corner of the PowerChute PLUS window frame, or click on the Window Menu Button **▶Close** selection. On–line help is provided for PowerChute PLUS by clicking on the **Help** selection within the PowerChute PLUS window.

4.2.3.4 Terminal Access Only. Systems that have access to the RPG LAN can enter it remotely with the UNIX commands telnet or ftp. These commands provide terminal, or command line, type access to the RPG but do not emulate the RPG HCI or any other graphical applications.

4.2.4 KEYBOARD.

The MSCF keyboard is a product of Sun Microsystems and all UNIX systems must have a keyboard installed in order for the system to boot up at all. In the WSR−88D RPG configuration, the MSCF processor always has its own keyboard, mouse, and terminal, while the RPG processor also has its own keyboard, mouse, and terminal unless there is a BDDS installed on the system. In that configuration, the RPG processor and the BDDS processor share the same keyboard, mouse, and terminal. Some keys provide unique functions when they are used simultaneously with another key. The following paragraphs list and describe some of the more helpful combination keyboard entries. Some of these keyboard combinations apply only to the boot terminal while others apply to the boot terminal as well as a non−boot terminal.

4.2.4.1 Boot Terminal Keyboard Functions. A system's boot terminal is the terminal that is directly connected to that system's mother board video port. The MSCF boot terminal is the 21−inch monitor that sets with the MSCF processor. Some of the unique keyboard entries that are only available at the boot terminal use the Stop key and are listed below. To execute these functions hold down the Stop key and then press the other key.

Stop Characters	Purpose
Stop−A	system abort command, takes the user to the "ok" prompt
Stop−N	available only during power up, sets the systems Non−Volatile Random Access Memory (NVRAM) parameters to the original default settings. (Press the keys down before powering on the system, and continue to hold them down until the system banner displays on the terminal.)

WARNING

The Stop−A key combination should only be used as a final resort to get the system down to the "ok" prompt. Whenever possible, the system administrator should perform an orderly shutdown IAW the procedures in paragraph 4.6.2, Table 4−41. The reason is that these keyboard entries do not sync the contents of memory to the disk drive, so the file system could become corrupted.

4.2.4.2 Non−Boot Terminal Keyboard Functions. A non−boot terminal connects to a system through some means other than a direct connection to the graphics card. It may be some type of connection provided by the LAN like a telnet, or ftp. Control characters are very helpful for performing specific tasks on both the boot and non−boot terminal. A list of control characters and their functions is given below. To enter a control character, hold down the Control key and then press the other key. While on the Sun keyboard the word control is actually spelled out as Control, it is very common on other commercial keyboards to see the word abbreviated as either Ctrl or CTRL.

This manual uses the abbreviation of **<Ctrl>** when describing a Control keyboard entry. The Control key is represented on the screen by the caret (^) symbol, such as ^S for **<Ctrl> S**.

Control Characters	Purpose
<Ctrl> S	Stops output to the screen
<Ctrl> Q	Resumes output to the screen
<Ctrl> C	Stops the current command or function
<Ctrl> D	Indicates end–of–file or logout
<Ctrl> W	Erases the current word

Another key that provides unique functions at the boot or non–boot terminal is the ! (exclamation point) key. Using this key along with the history command enables the user to repeat any previously entered commands exactly as they were entered with a minimum of keystrokes. Both the history command and the unique ! (exclamation point) key function are available only on regular RPG system user accounts and are not available on the system administrator (root) account. Entering **history<CR>** displays a list of the last 20 commands that were entered in that window. On the left hand side of the list is the line number that the command was entered on. From this point, to repeat any of the commands that appear on the history list, simply enter the exclamation point, the line number from the history list, followed by a carriage return. For example, to repeat the command that appears on line 26 of the history list, enter **!26<CR>**. To simply repeat the last command that was entered, enter two exclamation points followed by a carriage return (**!!<CR>**).

Another key that provides unique functions at the boot or non–boot terminal is the Q key. This key provides an especially helpful function when it is used in association with the **more** command and when viewing the man pages. Pressing the **Q** key returns the user to the system prompt when there are still more pages of text available to be viewed. This prevents the user from having to scroll through unwanted pages of text just to get to the end of the material and back to the system prompt.

4.2.5 MOUSE.

The MSCF mouse is a product of Sun Microsystems and has three buttons. In the WSR–88D RPG configuration, the MSCF processor always has its own keyboard, mouse, and terminal. The RPG processor only has its own keyboard, mouse, and terminal if a BDDS is not installed on the system. In that configuration, the RPG and the BDDS processors share the same keyboard, mouse, and terminals. The Front Panel's on–line Help Manager refers to the mouse buttons as one, two, and three, where this manual refers to the same buttons as left, middle, and right respectively. Each button can be used in the standard click, double–click, or drag functions. The mouse's orientation can be changed from right–handed to left–handed by using the Front Panel's Style Manager. The following paragraphs refer to the buttons as they are oriented for right–handed use and describe the most common, unique, and helpful functions available for each mouse button.

4.2.5.1 Left Mouse Button. The most commonly used button on the mouse is the left button. The types of tasks that can be done by clicking the left mouse button include the following:

- Select a window or an icon, making it active.

- Choose a button or a hyperlink within a window or a control on the Front Panel.
- Choose an item within a menu.

The types of tasks that can be done by double–clicking the left mouse button include the following:

- Restore a minimized icon into a window.
- Close a window. (On the upper left hand corner of the window frame.)

The types of tasks that can be done by dragging the left mouse button include the following:

- Move a window or an icon.
- Highlight text.
- Make a menu selection.
- Drag a slider within a window's scroll bar to scroll through its contents.

4.2.5.2 Middle Mouse Button. The types of tasks that can be done by clicking on the middle mouse button include the following:

- Once a text string or a command has been highlighted by dragging over it, click on the middle mouse button to copy and paste it to the end of the current line.

4.2.5.3 Right Mouse Button. The types of tasks that can be done by clicking on the right mouse button include the following:

- Open the Window Control Menu (On an icon or anywhere on a window frame.)
- Open the Workspace Menu (Anywhere on the workspace background.)
- Open a CDE Front Panel or Subpanel control's popup menu. (On the control on the CDE Front Panel or Subpanel.)

Section 4.3. UNIX Operating System

NOTE

This chapter and its corresponding sections refer to the RPGPCA as UD70. Unless otherwise specified for FAA redundant systems, this information also applies to RPGPCA UD170.

4.3.1 INTRODUCTION.

The UNIX Operating System (OS) used by the RPG processor is a Posix compliant, System V–based 64 bit OS. At the pure OS level, the RPG runs the Sun OS 5.7 release. At the user level, the OS is called Solaris 8 and conforms to all X/Open UNIX 95 standards. The OS uses CDE as its graphical interface which was established for the X/Open standards. CDE creates a desktop environment that looks the same across all UNIX vendor–unique platforms. This section discusses the basic concepts of the UNIX operating system, different user and login modes, use of the CDE, and different help programs available. It discusses many of the common UNIX and CDE OS–level utilities/programs available, the UNIX file system, and provide command syntax and examples for most of the commonly used UNIX commands.

NOTE

The CDE is available only while using a normal console connection (i.e., the direct graphics interface connection) or some type of X–windows emulator package (e.g., “Exceed”) from a remote location.

This section is intended to be a brief introduction to the UNIX OS and is not intended to cover all knowledge areas that would be covered in an introductory UNIX course. In all cases, formal training in UNIX (agency level and/or commercial) is desired to achieve an overall working level knowledge of the UNIX operating systems.

4.3.1.1 Initialization of the UNIX OS. When the processor is powered on, it automatically boots the UNIX OS. This also happens when a system reboot or init sequence is commanded (discussed below). The boot sequence will check/initialize all hardware, check/mount the necessary file systems, start necessary support services (printing, network functions, etc.) and bring the system to the normal or commanded INIT level. See Table 4–1 for an example of a normal boot sequence. The processor will also initialize to the point that a CDE Login screen, as seen in Figure 4–9, is displayed.

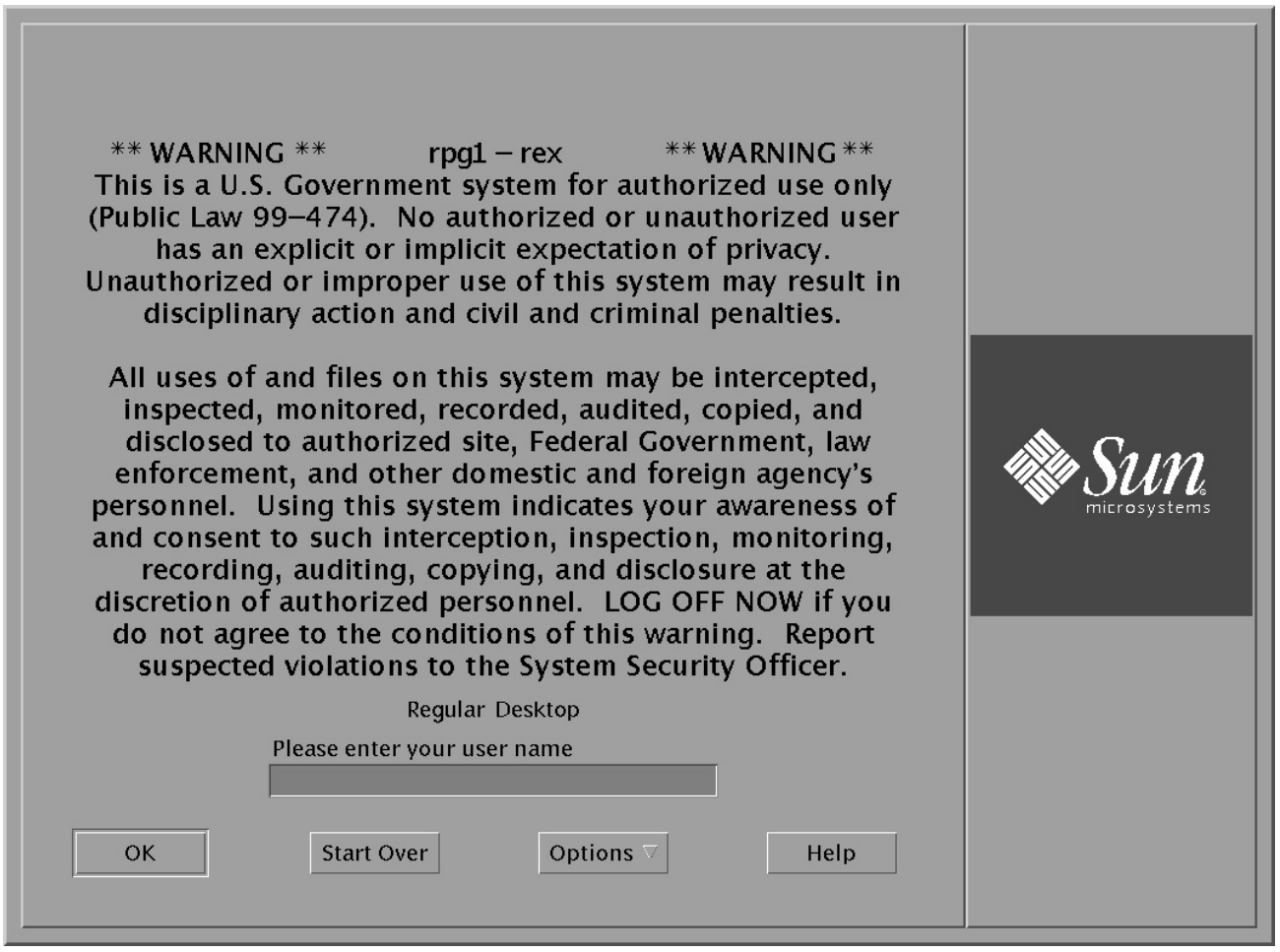

Figure 4–9. CDE Login Screen

Table 4–1. Example Boot Sequence

```
Sun Ultra 5/10 UPA/PCI (UltraSPARC–IIi 440MHz), Keyboard Present
OpenBoot 3.19, 256 MB (50 ns) memory installed, Serial #11603303.
Ethernet address 8:0:20:b1:d:67, Host ID: 80b10d67.


Initializing Memory

Boot device: /pci@1f,0/pci@1,1/ide@3/disk@0,0:a  File and args:
SunOS Release 5.8 Version Generic_108528–27 64–bit
Copyright 1983–2003, Sun Microsystems, Inc.  All rights reserved.
NOTICE: MAGMA PCI DRIVER 5.1 for MAGMA 4 PCI DMA SLRS Instance 1
NOTICE: MAGMA PCI DRIVER 5.1 for MAGNA 8 PCI DMA SLRS Instance 2
NOTICE: hboard offset is 0x110
configuring IPv4 interfaces: hme0.
Hostname: rpg1–ktlx
The system is coming up.  Please wait.
checking ufs filesystems
/dev/rdsk/c0t0d0s4: is clean.
/dev/rdsk/c0t0d0s5: is clean.
/dev/rdsk/c0t0d0s7: is clean.
starting ppp (no interface defined).
Setting local Solaris kernel changes –ndd Tuning
NIS domainname is nexrad.noaa.gov
starting rpc services: rpcbind keyserv done.
Setting netmask of hme0 to 255.255.255.128
Setting default IPv4 interface for multicast: add net 224.0/4 gateway rpg1–ktlx
syslog service starting.
Print services started.
volume management starting.

PowerChute Plus for Unix, v4.2.3: Copyright 1998, American Power Conversion

starting audit daemon
Configured 229 kernel events.
Checking /jaz filesystem
Checking permissions on /jaz
Setting NEXRAD eeprom settings. . .
Checking MLOS serial port settings
The system is ready.

** WARNING ** WARNING ** WARNING ** WARNING ** WARNING **
_____________________________________________________
This is a U.S. Government system for authorized use only
(Public Law 99–474).  No authorized or unauthorized user
has an explicit or implicit expectation of privacy.
```

Unauthorized or improper use of this system may result in disciplinary action and civil and criminal penalties.

All uses of and files on this system may be intercepted, inspected, monitored, recorded, audited, copied, and disclosed to authorized site, Federal Government, law enforcement, and other domestic and foreign agency's personnel. Using this system indicates your awareness of and consent to such interception, inspection, monitoring, recording, auditing, copying, and disclosure at the discretion of authorized personnel. LOG OFF NOW if you do not agree to the conditions of this warning. Report suspected violations to the System Security Officer.

_____

** WARNING ** WARNING ** WARNING ** WARNING ** WARNING **

****
*
* Starting Desktop Login on display :0...
*
* Wait for the Desktop Login screen before logging in.
*
****

**********Displays CDE Login Screen**********

4.3.1.2 Operating System INIT Levels. At power on or upon a reboot, the system boots itself to INIT Level 3 which is considered multi–user mode. The INIT levels, also called "run states" or "run levels", can also be commanded with the init command. Both the reboot and init commands can only be performed by a Superuser and are discussed in paragraph 4.3.4.3.14. At any given time, the processor is in one of the following eight possible init levels:

INIT LEVEL	DEFINITION
0	Firmware/boot PROM (Programmable Read Only Memory) level.
1	System administration mode. No users are logged in, but all file systems are left mounted and are accessible to a System Administrator.
2	Multi–user mode without network support.
3	Multi–user mode with network support (default).
4	Normally not used.
5	Power–off state.

INIT LEVEL	DEFINITION
6	Reboot.
S (or s)	Single–user mode. The terminal that executed this command becomes the system console. When the system comes down to a single–user mode, all file systems remain mounted but all multi–user processes are stopped.

4.3.1.3 User Accounts. To be able to log into the system an individual must have a user account. The root level account is controlled by the System Administrator and normally only the System Administrator has the password to enter the root account. For other users, normal user accounts can be established by the System Administrator (see paragraph 4.6.9.2).

4.3.1.4 Operating System User Modes. There are three different user modes which represent three different methods for logging into the system and interacting with the operating system. The three modes are: command line login, CDE login, and Remote login.

NOTE

This section discusses some graphical manipulations using a mouse. The word "click" indicates a standard left mouse click. The symbol ▶ is used to indicate subsequent left clicks through sub–menu selections. When a right click or double–click is required, it is specifically indicated.

4.3.1.4.1 Command Line Login. At the CDE Login screen, click **Options ▶ Command Line Login**. The user is prompted to and must enter a **<CR>** to continue to a login prompt. At the system login prompt, enter a valid *user_name***<CR>** and then *password***<CR>**. The user can now interact with the operating system at the command line level, but no windows or other graphical tools are available. This mode is normally used only by a System Administrator for system maintenance. When the user is prompted to enter a **<CR>** to continue to the login prompt and chooses not to, the CDE Login screen will return to the screen within a minute.

4.3.1.4.2 CDE Login. To enter the CDE, type a valid *user_name***<CR>** key or click on **OK**, then the password text entry box appears which continues the CDE Login. Type in the *password*, (the password does not appear as it is typed for security reasons) then press the **<CR>** key or click on **OK** after data entry. Upon entering the CDE, the user has access to the CDE Control Panel for selection of numerous graphical applications. The user also has access to terminal windows for command line interaction with the OS. Within the CDE, a user can have multiple terminal windows open; therefore multiple windows can be utilized to perform numerous tasks at the same time. See paragraph 4.2.3.1 for a detailed discussion on use of the CDE.

4.3.1.4.3 Remote Login. In many cases, an individual can gain access to any given UNIX system remotely (assuming the individual has a user account on that system). From a remote UNIX system or possibly a PC, a remote session may be initiated by use of a telnet program (see paragraph 4.3.4.3.12 for a discussion of how this program is started). When telnet is started, and assuming the remote login is successful, the remote user can interact with the RPG processor at the OS command

line level. Remote access capabilities are very dependent on network structuring which could vary from site−to−site. To achieve remote access to the RPG, the basic assumptions are:

- The RPG processor has a Network Interface Card (NIC) which has an Internet Protocol (IP) address assigned, and is connected to a LAN or the Internet. With the exception of Internet connectivity, the RPG meets these networking requirements.

- The system being used for remote access also has a NIC, an IP−address assigned, and is connected to a LAN or the Internet.

- The two systems have a TCP/IP path between them. This would mean that both systems would either need to be connected to the same LAN (and thus addressed within the same subnet), both would have Internet access, or a networking infrastructure is in place (routers, bridges, etc.) which would allow TCP/IP communication of devices addressed in different subnets.

This manual does not contain detailed discussion of all the possible networking concepts. However, for the RPG Processor, Chapter 5 discusses addressing, subnetting, and how the RPG Processor itself is networked. Chapter 5 also addresses known variations based on agency−unique connectivity between the RPG Processor/LAN and other agency networks.

NOTE

This paragraph discusses a remote login interface as an interface at the OS command line only. If some type of remote X−Windows emulation package (e.g., “Exceed”) is being utilized, then the user may also be able to display the CDE just as if the user were sitting at the normal direct−connected graphics monitor.

4.3.1.5 Operating System Shells. A “shell” is the command line interpreter between the user and the OS. Different shells use some different command availability/syntax but, most commonly used commands are the same. The available shells are Bourne, C, and Korn. For the RPG, the root user uses a unique Bourne shell and a user account established to run the RPG Applications software uses the C shell. Other normal user accounts can be established using any of the available shells; however, all commands discussed in this manual are discussed based on using the C shell. More information can be obtained about shells using one of the help tools referenced in paragraph 4.3.2.

4.3.1.5.1 Operating System Prompts. The default command line prompt that is displayed is dependent on the shell in use as follows:

#	Root shell
$	Bourne shell
system name%	C shell
$	Korn shell

In addition to the normal prompts, unique prompts can be developed. For example, for the C and Korn shells, the system name can be replaced with a user's name. To do this, a unique definition would be entered into the user's .cshrc file (commonly called the "C–Shark" file) or the user's .kshrc file (commonly called the "K–Shark" file). Another option is for the prompt to display a command line counter and the user's present working directory. So, prompts may vary from system to system.

4.3.1.5.2 Use of Control Keys. There are only two control key sequence commands which have global significance when using command line programs. **<Ctrl> D** is used to signal conclusion of text entries within a program (see the cat command in paragraph 4.3.4.3.5 as an example), and to stop the script log capture program. **<Ctrl> C** is used to abort a program running in the foreground.

4.3.2 UNIX OPERATING SYSTEM SUPPORT UTILITIES/PROGRAMS.

Most every time a command is entered or a CDE icon is selected, some type of program is started. These programs are sometimes called utilities or tasks. Other times, it may be appropriate to say that a user is executing a script. Regardless, in UNIX, all of these programs/tasks/scripts are considered to be a "process". Some processes result in starting a type of graphical application (like the RPG Applications software). Other processes have only ASCII–based input/output and all user interaction is at a command line within a terminal window. This section briefly discusses some of the more common processes used, primarily in reference to some of the help utilities available.

4.3.2.1 Graphical Based Support Utilities. Graphical based utilities can either be started from another graphical application (like the CDE) or can also be started from the command line. For the most part, the graphical utilities discussed here are all started from the CDE. See paragraph 4.2.3.1 for a detailed discussion on use of the CDE.

4.3.2.1.1 CDE Control Panel. The CDE control panel can be used to start most of the necessary graphical based support utilities. Some of those more common utilities are as follows:

- File Manager
- Additional terminal windows
- Text Editor
- Style Manager (background and screen properties)
- Applications Manager (many graphical tools available)
- Help and AnswerBook2 applications

4.3.2.1.2 CDE Workspace Menu. When a user right clicks anywhere in the CDE background area, the CDE Workspace Menu is activated. From the Workspace Menu, a user can click on sub–menu items to further select other graphical based utilities. Common items that are opened/selected from the Workspace menu include the following:

- System console window:

  `Workspace Menu ▶Hosts ▶ Terminal Console`

- Terminal window:

  `Workspace Menu ▶Hosts ▶ My Host`

- Performance meter utility:

  `Workspace Menu ▶Hosts ▶ Performance Meter`

- Snapshot utility:

  `Workspace Menu ▶Applications ▶ Snapshot`

NOTE

A system console window looks just like other terminal windows, except it has a `Console` header label. It is unique in that it receives and displays system–level error messages. While multiple system console windows can be started, only the last console window started receives the error messages.

4.3.2.1.3 Help Utilities. Help and AnswerBook2 are the graphical based help utilities available.

4.3.2.1.3.1 Help. The Help utility can be selected by clicking on the ? located on the CDE Control Panel. After the Help window is opened, a user may search for information on a selected topic.

NOTE

This help utility only includes information concerning the CDE.

4.3.2.1.3.2 AnswerBook2. AnswerBook2 is a browser–based help utility which provides an all–encompassing help program including information on all aspects of the UNIX platform. To start it, click on the ▲ above the ? on the CDE control panel. Then click on `AnswerBook2`.

4.3.2.2 Command Line–Based Support Utilities. Most utility–type programs that can be run from the command line are non–graphical in nature and mostly involve functions that would be performed by the System Administrator. This includes tape archive (tar), file system dumps and restores (ufsdump and ufsrestore). As required, use of these utilities are specifically discussed in paragraph 4.3.4.3.11. The System Administrators' utility (admintool) is normally started from the command line but it is graphical in nature. Its use is specifically discussed in paragraph 4.6.9.

4.3.2.2.1 Command Line Help Utilities. At the command line, there are two methods to get help on command syntax. This is through use of "man pages" (manual pages) or through use of the command processing returned syntax statement.

4.3.2.2.1.1 Man Pages. The command syntax for using the man command is found in paragraph 4.3.4.3.1. Man pages return detailed information for almost any command entered as an option. When viewing man pages, press the **<Space Bar>** to see the next page or press **Q** to quit.

4.3.2.2.1.2 Command Processing – Returned Syntax Statement. Almost all commands have required variables or arguments associated with an option, which must be entered as part of the command string. In cases where these items are required, simply entering the command with no option or variables results in a returned syntax statement from the shell's command processing function. This only provides a syntax statement with possible options or variables and provides no detailed information. However, in many cases, this may be enough to help the user remember the desired option or variables needed for a particular command.

4.3.3 UNIX FILE SYSTEM.

Everything within the UNIX OS is actually considered a file. A directory or subdirectory is considered a file. When entering a command at the command line, the command is "calling" a particular file which normally resides at the /usr/bin or the /usr/sbin directory. In some cases, the user may not have a "path" to a particular command. Therefore it is helpful to understand the normal directory structure, file naming conventions, and the use of absolute and relative paths.

4.3.3.1 Directory Structure. The physical disk is normally divided into logical partitions. For a Sun Sparc system, these partitions are called "slices". The root (/) slice is available on all systems. During the initial OS load, other Unix File Systems (ufs) are normally integrated onto the disk so that there is a logical division between different types of files. In some cases, this makes backup and restoral of files easier than if no logical divisions are used. The common slices are as follows:

FILE SYSTEM	CONTAINS
/	Root files, the kernel, boot control files, hardware device files (drivers) and most files that control the hardware.
/var	System administration files and logs.
/usr	User level files, particularly all commands.
/usr/openwin	Open Windows and CDE files.
/export/home	User accounts.
/opt	Optional software.

4.3.3.2 Current and Parent Directory. The present directory is the "current" directory while the "owning" directory of the current directory is called the parent directory. So, if the current directory is /export/home/ob1 then it's parent directory is /export/home.

4.3.3.3 File Naming Conventions. UNIX file names can be up to 255 characters long. They can include any combination of upper or lower case letters, numbers, . (dot), – (dash), or _ (underscore). Be aware that UNIX, unlike MS–DOS is case specific. That is, if capital letters are used then a file name can only be retrieved by entering capital letters (and vice–versa). Special characters can be used in file names. However, *, <, >, –, \, /, ?, or | should not used in file names since those symbols either have special meaning or can be used as wildcards for file name retrieval.

4.3.3.4 Absolute and Relative Paths. To retrieve a subdirectory or file, an absolute path name starting at root (/) or a path name relative to the current directory can be used. So, if /export/home is the current directory and the user wants to go to the ob1 subdirectory, to use the absolute path enter **cd /export/home/ob1<CR>**. To use a path relative to the present location, enter **cd ob1<CR>**.

4.3.3.5 File Locations and Wildcards. Some common special characters and wildcards that are used to speed up file retrievals or placements are listed below. Special characters specify a current or parent directory, or the user's home directory. Wildcards substitute for file name characters so that an entire file name need not be entered, or to specify groups of files with similar names.

SPECIAL CHARACTER	USED TO:
.	Specify the current directory location.
. .	Specify the parent directory.
~	Specify the home directory location.
WILDCARDS	**USED TO:**
*	Represent any number of characters when specifying file(s). So, if * is used by itself, it specifies all files (except files beginning with a dot).
?	Represent any single character. So if *a??* is used, it would represent any three character file names starting with "a".
[ ]	Represent any range of characters specified within the brackets, so if [abcd]* or [a–d]* is used, it would represent any length file name beginning with the letters a, b, c, or d. Remember that UNIX is case specific.

4.3.4 UNIX OPERATING SYSTEM COMMANDS.

This section discusses the basic concepts of UNIX commands, including command syntax. Syntax and examples of the more commonly used UNIX commands are provided.

4.3.4.1 General Syntax Rules. As referenced to paragraph 4.3.4.3, the command itself is in bold type and must be typed exactly as shown when listed under Command Format. Items in regular type (variable name) represent a mandatory entry, but would be replaced with appropriate text of the desired entry (directory, file name, etc.). When followed by ..., then multiple entries of the same type are allowed. Optional parameters are [bracketed]. If an optional parameter is followed by an argument (variable name) then the variable must be replaced by the exact entry if that option is used.

4.3.4.2 Multiple Commands and "Piped" Commands. Multiple commands can be entered on the same command line if they are separated by a semicolon (**;**). Another concept similar to using multiple commands is called "piping". When using "pipes", commands are separated by a vertical bar (|) and the output from the first command is used as input to the second command. The use of pipes is most common where the first command displays a file or listing of some type and the second command specifies a print action or does some type of filter search. For example, to do a man page listing on the command ls and print the man pages instead of view them, the command would be **man ls | lp<CR>**. Examples of common uses of pipes are provided in the following paragraphs.

4.3.4.3 Commands. Paragraphs 4.3.4.3.1 through 4.3.4.3.12 discuss some of the UNIX commands and arguments which could be used daily. This section is not intended to discuss all available commands. Nor are all arguments discussed for the commands which are listed. In many cases, commands which could be detrimental to system operation have been intentionally omitted. In some cases, default aliases are also discussed. Also, commands performed only by the System Administrator (Super User) are referenced as "*SU*" in the right margin as follows: *SU*

NOTES

Some commands are shell specific and do not exist in every shell. All commands discussed here are available in the C shell, but may not be available in other shells.

Since the keyboard in use may have either an "Enter" key or a "Return"key, **<CR>** is used to delineate the end of the command line when shown in the examples. Unless told otherwise, each shown command line must be "entered" to be processed.

Not all commands, nor all Options / Arguments / Variables are referenced here. Only the more common commands and options are referenced. Use the man pages (paragraph 4.3.4.3.1) to get a list of all Options / Arguments / Variables for any given command.

The examples below show a user prompt as a % symbol even though it could contain other information (hostname, directory path, etc.). Also, for the Output Description of the examples, example names of files, directories, and text strings are in italics to indicate that in the example, they represent a proper name which may be user–unique.

Table 4–2. Command Purposes Index

Command Sections	Paragraph Reference
Command Availability, Help, History and Repetition	4.3.4.3.1
File System Navigation	4.3.4.3.2
File Searches	4.3.4.3.3
File Listings and Display	4.3.4.3.4
Creating New Directories and Files	4.3.4.3.5
File Manipulation	4.3.4.3.6
Shell and Environment Variables	4.3.4.3.7
System Interrogation	4.3.4.3.8
File Access Ownership / Permissions	4.3.4.3.9
Printing	4.3.4.3.10
Removable Media	4.3.4.3.11

Table 4–2. Command Purposes Index – Continued	
Command Sections	**Paragraph Reference**
Networking	4.3.4.3.12
Miscellaneous User Commands	4.3.4.3.13
Miscellaneous System Administrator Commands	4.3.4.3.14

4.3.4.3.1 Command Availability, Help, History and Repetition. The following commands are discussed in this section:

- **which**
- **man**
- **history**
- **!**

Command

which

The **which** command provides the absolute path of an available command. It is useful for providing a quick determination of whether a command is available and where it is located.

Command Format

which command

Options/Arguments/Variables	Description
command	Name of the command to search for.

Example(s)	Output Description
%**which** *tar*<**CR**>	Displays the absolute path to the tar command. In this case the output would be /usr/sbin/tar.

Command

man

The **man** command is used to display manual page information on a selected subject (command, process, etc.). It provides a description of the subject, along with possible options and examples.

Command Format

man name

Options/Arguments/Variables	Description
name	Subject matter file name(s).

Example(s)	Output Description
%**man** *pwd*<CR>	Displays the manual documentation on the pwd command.

Command

history

The **history** command lists the previous (n) number of commands with (n) being defined in the history environment variable of the current shell. The history default is to list the previous 20 commands. The **h** alias (if available) can be used to call the **history** command.

Command Format

h
history

Options/Arguments/Variables	Description
None	

Example(s)	Output Description
%**history**<CR>	Displays a numbered list of the last 20 commands issued by the current user.

Command

!

The exclamation mark (!) is not a command; rather, it is used as an event designator. However, it is discussed just like any other command for most purposes. When followed by a succeeding argument, it is used to recall and execute the last command or a previous command.

Command Format

!!

!n

!str

Options/Arguments/Variables	Description
!	Designates the previous command to be executed.
n	Designates the command number as indicated in the history list. Replace (n) with the desired command number and executes the associated command.
str	Designates last command beginning with str. Replace str with the necessary text to recall and executes the specific command starting with that string. In most cases, use of just one or two letters is all that is necessary to reference a specific command.

Example(s)	Output Description
%**!***18***<CR>**	Execute command number 18 from the history list.
%**!***p***<CR>**	Execute the last command entered that started with the letter p.

4.3.4.3.2 File System Navigation. The following commands are discussed in this section:

- **cd**
- **pwd**

Command

cd

The **cd** command changes the current directory to the one specified using a relative or absolute path name. Alone, **cd** changes to the default home directory, (for example /export/home/v1.15).

Command Format

cd directory
cd directory/directory/...
cd /directory/directory/...
cd
cd ..
cd /

Options/Arguments/Variables	Description
directory	Directory name. Changes to a directory relative to the present location or change based on an absolute path (see para. 4.3.3.4).
. .	Changes the current directory to the parent directory.
/	Changes the current directory to the root directory.

Example(s)	Output Description
%**cd** *data*<**CR**>	Changes the current directory to a relative subdirectory called data.
%**cd** *data/jan2ØØ1*<**CR**>	Changes the current directory to the subdirectory jan2001 under the relative subdirectory data.
%**cd** */export/home*<**CR**>	Changes the current directory to the subdirectory called home under /export using absolute path names.
%**cd**<**CR**>	Changes the current directory to default home directory, such as /export/home/v1.151.
%**cd** *. .*<**CR**>	Changes the current directory to its parent directory.
%**cd** */*<**CR**>	Changes the current directory to the root directory.

Command

pwd

The **pwd** command displays the user's present working directory as an absolute path name.

Command Format

pwd

Options/Arguments/Variables	Description
None	

Example(s)	Output Description
%**cd** %**pwd**<**CR**>	As an example, a cd is issued without options to change the current directory to the default home directory (software version is v1.151). When the pwd is executed the absolute path name is displayed to screen. In this case `/export/home/v1.151` would be the output as the user's home directory.

4.3.4.3.3 File Searches. The following commands are discussed in this section:

- **find**
- **grep**

Command

find

The **find** command searches for files meeting specific criteria. The starting directory to descend through is indicated by the path.

Command Format

find path [–mtime n] [–name pattern]

Options/Arguments/Variables	Description
path	Designates the directory to search. The specified path can be relative or absolute.
–mtime n	Search for files that have been modified in a specified number of days. A +n means more than n days, a –n means less than n days, and an n means exactly n days.
–name pattern	Search criteria are for patterns contained in specified file names.

Example(s)	Output Description
%**find** *krex –mtime +21*<**CR**>	Find all files in the krex subdirectory that have been modified more than 21 days ago, and display output to screen. –21 would be used for less than 21 days ago.
%**find** *. –name *.log**<**CR**>	Find all files with the pattern log as an extension in the current directory and subdirectories.

Command

grep

The **grep** command searches files for a pattern and displays all lines that contain that pattern to the screen.

Command Format

grep [–iv] pattern filename

Options/Arguments/Variables	Description
–i	Ignore upper/lower case distinction during search.
–v	Write all lines except those that contain the pattern.
pattern	Search for this specific pattern.
filename	Restrict search to specific file or directory.

Example(s)	Output Description
%**grep** *–i err /tmp*<**CR**>	Display all files containing the pattern err, regardless of upper/lower case letters, in the /tmp directory.
%**ps** *–ef* **|** **grep** *–v orpg*<**CR**>	Check processes, pipe the output to grep. Display all processes that do not have the pattern orpg.

4.3.4.3.4 File Listings and Display. The following commands are discussed in this section:

- **ls**
- **cat**
- **more**
- **pg**
- **head**
- **tail**
- **script**
- **diff**
- **sdiff**

Command

ls

The **ls** command lists the contents of the directory.

Command Format

ls [–alrtFR] [file]

Options/Arguments/Variables	Description
–a	Display the hidden files along with regular files.
–l	List in long format, giving mode, Access Control List (ACL) indication, number of links, owner, group, size in bytes, and time of last modification. Files are listed alphabetically.
–t	Display files by time stamp with files modified most currently listed first.
–r	Display files in reverse alphabetical order. When used with –t, files are listed in reversed chronological order, oldest to newest.
–F	Mark listed directories with a trailing slash (/) and executable files with an asterisk (*).
–R	List subdirectories in recursive order encountered.
file	Designates a specific file name or directory to list. Wildcards may be used.

Example(s)	Output Description
%**ls** *–al*<**CR**>	A long list of regular and hidden files (and subdirectories) in the directory.
%**ls** *–lrt*<**CR**>	Long listing in reverse time of when files (and subdirectories) were last modified.
%**ls** *–F*<**CR**>	List and mark all files Mark subdirectories with a slash (/) and executable files with an asterisk (*).

Command

cat

The **cat** command displays the content of each specified file to screen. Use of the cat command to generate a file is described in paragraph 4.3.4.3.5.

Command Format

cat file

Options/Arguments/Variables	Description
file	Designates the file(s) the user wants to view.

Example(s)	Output Description
%**cat** *.cshrc***<CR>**	Contents of the .cshrc file are displayed.

Command

more

The **more** command is a utility that displays the contents of a text file one page at a time. Once the first page is displayed, then special control options are available. Depressing the **<Space Bar>** scrolls to the next page; A **<CR>** advances one line at a time through the text; **f** skips forward a screen; **b** goes back one screen; **q** quits the **more** utility. When the end of the file is displayed, the **more** utility returns the user to a prompt.

Command Format

more file

command | **more**

Options/Arguments/Variables	Description
file	Designates the file the user wants to view. Naming a file is a mandatory variable unless more is used with a pipe.
command	Designates the command to pipe to more that the user wants to view, one page at a time.

Example(s)	Output Description
%**more** *.cshrc***<CR>**	The first page of the .cshrc file is displayed on the screen.
%*ls –l* **| more<CR>**	A long listing of files is requested, piped to the more command. Thus a long listing of files is displayed one page at a time.

Command

pg

The **pg** command is a filter that allows the examination of files one page at a time. If a user types a **<CR>** another page is displayed. A **q** followed by a **<CR>** quits the pg utility.

Command Format

pg filename

Options/Arguments/Variables	Description
filename	Designates the text file to be displayed.

Example(s)	Output Description
%**pg** *errorlog*<**CR**>	Contents of the file errorlog is displayed one page at a time.

Command

head

The **head** command is a utility that displays the first lines in a file to standard output. Default is 10 lines.

Command Format

head [–number] filename

Options/Arguments/Variables	Description
number	Designates the number of lines to display.
filename	Designates the file to be viewed.

Example(s)	Output Description
%**head** *–2Ø /etc/system*<**CR**>	Display the first 20 lines of the file system in the etc directory.

Command

tail

The **tail** command is a utility which displays the last lines in a file to standard output. Default is 10 lines.

Command Format

tail [–number] filename

Options/Arguments/Variables	Description
number	Designates the number of lines to display.
filename	Designates the file to be viewed.

Example(s)	Output Description
%**tail** */etc/system***<CR>**	Displays the last 10 lines of the file system in the /etc directory.

Command

script

The **script** command records everything on a user's screen, then writes it to a filename. If no filename is given, the record is saved in the default filename typescript. **<Ctrl> D** halts it.

Command Format

script [–a] [filename]

Options/Arguments/Variables	Description
–a	Append the record to a file, don't overwrite the file.
filename	Filename where the screen dumps are written. If not given, the record is saved in the filename typescript.

Example(s)	Output Description
%**script** *–a rtr_monitor* **<CR>**	Copies entire screen during a login session and appends it to a file specified as rtr_monitor.

Command

diff

The **diff** command compares the contents of file1 with file2, and displays to the screen what changes would be required to convert file1 to file2. It displays the difference between the files, line by line. In the output of diff, a < precedes lines from file1 and a > precedes lines from file2.

Command Format

diff file1 file2

Options/Arguments/Variables	Description
file1 and file2	Names of files.

Example(s)	Output Description
%**diff** *ssncf.txt ssncf.txt.org*<**CR**>	Displays the difference between files, ssncf.txt and ssncf.txt.org, line by line. In the output of diff, a < precedes the lines from ssncf.txt and a > precedes the lines from ssncf.txt.org.

Command

sdiff

The **sdiff** command displays the two files side–by–side, with their differences noted. The sdiff uses the diff command to produce a side–by–side listing of two files. The > and < symbols distinguish a text line that exist in one file and is blank in the other. A pipe (|) symbol is used when both lines contain text, but the lines differ in content.

sdiff

Command Format

sdiff [–s] file1 file2

Options/Arguments/Variables	Description
–s	Displays only the differences between file1 and file 2 on the screen.
file1	Name of file.
file2	Name of file.

Example(s)	Output Description
%**sdiff** *–s system system.org*<**CR**>	Displays the two files, system and system.org, line–by–line, side–by–side. In this case the –s option displays only the lines which differ in contents.

4.3.4.3.5 Creating New Directories and Files. The following commands are discussed in this section:

- **mkdir**
- **touch**

- **cat**

Command

mkdir

The **mkdir** command creates a named directory.

Command Format

mkdir directory

Options/Arguments/Variables	Description
directory	Name of directory to be created. Path may be included if user wants the new directory in a location other then current directory. Absolute or relative path names can be used.

Example(s)	Output Description
%**mkdir** */etc/temp***<CR>**	Creates a directory called temp in the etc directory, using absolute path name.

Command

touch

The **touch** command creates an empty file if it doesn't exist. If the file exists then its access and modification date/time are reset to the current date/time.

Command Format

touch filename

Options/Arguments/Variables	Description
filename	Name of file the user wants the date/time reset on, or filename to be created.

Example(s)	Output Description
%**touch** *notrouter***<CR>**	Updates the access and modification date/time of the file notrouter. If the file does not exist, it is created.

Command

cat

The **cat** command also has the ability to overwrite or append the contents of specified files to other files. If the destination file does not exist, it is created first. Previous discussion of the cat command in paragraph 4.3.4.3.4, deals with viewing contents of a file.

Command Format

cat [source_file] [>, >>] destination_file

Options/Arguments/Variables	Description
source_file	Name of file to be copied from. If no file is specified, standard input from the keyboard is used (interactive mode).
>	Create and write to destination file or overwrite existing destination file.
>>	Create destination file or append to existing destination file.
destination _file	Name of the file which is to be overwritten, created and written to, or appended.

Example(s)	Output Description
%**cat** *temp* **>** *errorlog***<CR>**	Contents of the source_file temp overwrite the errorlog file. If the file errorlog did not exist, it would be created and the contents of temp would be written into it.
%**cat** *rpgdata rdadata* **>>** *cpulog***<CR>**	Contents of the source_files rpgdata and rdadata are joined and appended to the end of the file cpulog. If the file cpulog did not exist, it would be created.
%**cat** **>** *1Øjan2ØØ1***<CR>**	When used without a source_file, this places the user in interactive mode. Anything the user types is written to the file 10jan2001. Anything content preexisting in the file is overwritten. The **<Ctrl> D** command ends and saves the interactive session.
%**cat** **>>** *trouble_log***<CR>**	When used without the source_file, this places the user in interactive mode. Anything the user types is appended to the end of the file trouble_log. If the file trouble_log does not exist it is created. The **<Ctrl> D** command ends and saves the interactive session.

4.3.4.3.5.1 Redirection. Redirection symbols are tools which enable the user the ability to change the standard input and output to files.

Redirection Symbols	Description
>	The redirect output symbol (>) redirects the output to the specified file instead of the terminal.
>>	The redirect output to end–of–file symbol (>>) redirects the output to the end of the specified file, thereby appending to the specified file.
<	The redirect input symbol (<) specifies where the program should get its input.

Example(s)	Output Description
%**cat** *file1 file2* **>** *file3*<**CR**>	Causes the contents of file1 and file2 to be written into a newly created file3. If file3 existed, any data file3 contained would be overwritten. The original file1 and file2 remain intact.
%**cat** *file3* **>>** *comm_log*<**CR**>	Appends the contents of file3 to the end of the file comm_log. If comm_log did not already exist, it would be created and then appended to. The original file3 file remains intact.
%**mail** *roc* **<** *memo*<**CR**>	The contents of the file memo is used as the input text to the mail message to the roc.

4.3.4.3.6 File Manipulation. The following commands are discussed in this section:

- **cp**
- **mv**
- **cut**
- **dd**

Command

cp

The **cp** command can be used to copy the contents of the source file to the target file. The **cp** command causes an existing target file to be overwritten if it previously existed. No changes are actually made to the original file.

The **cp** command can be used to copy one or more source files to a target directory. The **cp** command causes existing target file(s) to be overwritten if they previously existed.

The **cp** command can be used to copy one or more source directories to a target directory. The *–r* option must be used. Once again, the **cp** command causes existing target file(s) to be overwritten if they previously existed.

Command Format

cp [–pr] source target

Options/Arguments/Variables	Description
source	Name of file(s) or directory to be copied. Source files remain intact after a cp.
target	Name of file(s) or directory is to be copied to. The target directory can also be the current directory (.) or the parent directory (..).
–p	Causes cp to preserve the user and group IDs, permission modes, and modification and access times.
–r	Causes cp to copy the directory and all its files, including subdirectories and their files to target directory.

Example(s)	Output Description
%**cp** *–p system system.org*<**CR**>	Copies the single file system into target file called system.org, preserves the original user, owner, permissions, and access and modifications times.
%**cp** **.conf /export/config*<**CR**>	Copies all files in current directory with a .conf extension into a target subdirectory called config.
%**cp** *–r lib temp_lib*<**CR**>	Copies the directory lib including all its files, subdirectories and their files into a target directory called temp_lib.

Command

mv

The **mv** command can be used to rename (or move) the source file to the target file. The user must have write permission to the target file before renaming will occur.

The **mv** command can be used to move one or more source files to a existing target directory. Target files retain their original name.

The **mv** command can be used to rename a source directory to the target directory.

The **mv** command causes the existing target file(s) to be overwritten if it previously existed and the –i option is not used. Source files and directories no longer exist after the **mv** command is executed.

Command Format

mv [–i] source target

Options/Arguments/Variables	Description
source	File(s) or directory to be moved or renamed.
target	File or directory to be created or replaced if already in existence. The target directory can also be the current directory (.) or the parent directory (..).
–i	Prompts for confirmation when the mv will result in overwriting an existing target.

Example(s)	Output Description
%**mv** *–i temp.log rpg.log*<**CR**>	Renames the source file called temp.log as rpg.log. The –i option requires the user to confirm the command.
%**mv** *–i *.tar tar_dir*<**CR**>	Moves all files in current directory with an extension name of tar to an existing target directory called tar_dir. The –i option requires the user to confirm the command.
%**mv** *–i rpg.logs krex_rpg.logs*<**CR**>	Renames the source directory rpg.logs to krex_rpg.logs. All subdirectories and files are moved and retain the same name. The –i option requires the user to confirm the command.

Command

cut

The **cut** command is used to display specific parts of a text line. No changes are actually made to the original file. The user specifies the part of the original file to be displayed to the screen. A comma can be used to separate multiple lists to be kept. A hyphen indicates a range of lists to keep.

Command Format

cut [–cf list] [–d delim] file

Options/Arguments/Variables	Description
–c	Used to list the column position to be kept.
–f	Used to indicate the fields that are to be displayed. The cut command uses the TAB character to separate fields, if the fields are separated by something other then a TAB, use the –d option to define the separator.
list	Specified data to be displayed, can be single, multiple, or a range of characters and fields.
–d delim	Default delimiter between fields are TABs, use the –d option to specify how fields are separated when other than TABS.
file	Name of the file to be cut.

Example(s)	Output Description
%**cut** *–c1–1Ø,2Ø–35 /etc/passwd*<**CR**>	In the file /etc/passwd, only characters in the column position of 1 through 10 and 20 through 35 are displayed on the screen.
%**cut** *–d: –f1–4 /etc/passwd*<**CR**>	In the file /etc/passwd, fields are separated with a colon (:). Display fields 1 through 4.
%**cut** *–f1 /etc/hosts*<**CR**>	In the file /etc/hosts, display only field 1.

Command

dd

The **dd** command converts and copies the specified input file to the specified output file. This command is commonly called a data dump.

Command Format

dd if=input_file of=output_file

Options/Arguments/Variables	Description
if=input_file	Designates the name of the input file or device.
of=output_file	Designates the name of the output file or device.

Example(s)	Output Description
%**dd** *if=lib.tar of=/floppy/floppyØ/lib.tar*<**CR**>	Copy the lib.tar file from the current working directory to a floppy disk.

4.3.4.3.7 Shell and Environment Variables. The following commands are discussed in this section:

- **echo**
- **alias**
- **set**
- **env**
- **setenv**
- **stty**
- **source**

Command

echo

The **echo** command does only one thing, it displays the arguments to the screen. This command is useful when writing scripts.

Command Format

echo string

Options/Arguments/Variables	Description
string	A pattern of text the echo command to write to screen

Example(s)	Output Description
%**echo** *hello*<**CR**>	The word hello is displayed to screen.

Command

alias

The **alias** command can be used to display command short–cuts already built into the system.

Command Format

alias

Options / Arguments / Variables	Description
None	

Example(s)	Output Description
%**alias<CR>**	Displays all pre–defined aliases to screen.

Command

set

The **set** command assigns a value to a C Shell variable. C Shell variables are local settings (i.e., local to the login session). When the **set** command is used alone, the currently defined local variables are displayed to screen. When defining local variables, the variable is normally typed in lowercase.

Command Format

set [variable][=value]

Options/Arguments/Variables	Description
variable	Specifies the local variable to set.
=value	Specifies the value of the variable .

Example(s)	Output Description
%**set** *history=3Ø***<CR>**	Sets local variable history to 30. The history default is normally 20.
%**set<CR>**	Displays currently defined local variables of the C Shell.

Command

env

The **env** command displays the current environmental variables, known as global variables.

Command Format

env

Options/Arguments/Variables	Description
None	

Example(s)	Output Description
%**env<CR>**	Displays all current environmental variables to screen.

Command

setenv

The **setenv** command sets environmental variables. Without options it displays a list of all current environmental variables to the screen. Environmental variables are also called global variables.

Command Format

setenv [VARIABLE] [value]

Options/Arguments/Variables	Description
VARIABLE	Specifies the environmental variable to set. Normally typed in UPPERCASE.
value	Specifies the value of the variable. Must be a single string word or placed in quotes.

Example(s)	Output Description
%**setenv<CR>**	Displays all current environmental variables to screen.
%**setenv** *PRINTER laser_jet*<**CR**>	Specifies the environmental setting for PRINTER to the value of laser_jet.

Command

stty

The **stty** command displays and sets certain terminal options for the standard input (keyboard).

Command Format

stty [setting] [key]

Options/Arguments/Variables	Description
setting	Specific function to set.
key	Actual key stroke to assign to key.

Example(s)	Output Description
%**stty<CR>**	Alone, stty gives the current setting for the standard input (keyboard).
%**stty** *erase<Backspace Key>*<**CR**>	Type stty erase then depress the backspace key on the keyboard. This sets the backspace key to actually backspace and erase the previous character.

Command

source

The **source** command reads and executes a C shell script. If changes are made to the dot files, (such as .cshrc or .aliases), the **source** command implement the changes into effect instead of forcing the user to log out and back in to implement the changes.

Command Format

source name

Options/Arguments/Variables	Description
name	C shell scripts

Example(s)	Output Description
%**source** *.cshrc*<**CR**>	This command is normally executed after a user has edited the .cshrc script to make the edits take effect immediately.

4.3.4.3.8 System Interrogation. The following commands are discussed in this section:

- **who**
- **uname**
- **ps**
- **df**
- **du**
- **dmesg**
- **prtconf**
- **mount**
- **mountall**

Command

who

The **who** command lists the user's name, terminal line, login time, and elapsed time since activity occurred on the line for each current system user.

Command Format

who

Options/Arguments/Variables	Description
None	

Example(s)	Output Description
% **who<CR>**	Displays information about the users on the current system.

Command

uname

The **uname** command displays information about the current system.

Command Format

uname [–anrs]

Options/Arguments/Variables	Description
–a	Displays basic information available from the system.
–n	Displays the node name.
–r	Displays the operating system release level.
–s	Displays the name of the operating system.

Example(s)	Output Description
%**uname** *–rs***<CR>**	Displays out the operating system and its release level.
%**uname** *–n***<CR>**	Displays out the node name of the system.

Command

ps

The **ps** command displays information about active processes. The output includes the process identification (PID), terminal identifier (TTY), cumulative execution time (TIME), and command name (NAME). Used alone, the **ps** command displays information about the controlling terminal.

Command Format

ps [–aef]

Options/Arguments/Variables	Description
–a	Displays information about processes most frequently requested including ones owned by other users.
–e	Displays information about processes now running.
–f	Generates a full listing with PID, TTY, TIME, and COMMAND. The output also includes the user ID (UID), parent process ID (PPID), processor utilization for scheduling (C), and process start time (STIME).

Example(s)	Output Description
%**ps** *–ef* | *more*<**CR**>	Displays a full listing of all processes now running, piped to more so user can view it one page at a time.

Command

df

The **df** command displays the amount of disk space used by mounted or unmounted file systems.

Command Format

df [–k]

Options/Arguments/Variables	Description
–k	Displays the total, used, and available space of the disk space units are in kilobytes.

Example(s)	Output Description
%**df** *–k*<**CR**>	Displays the used and available space, in kilobytes, plus a total of mounted and unmounted file systems.

Command

du

The **du** command displays the amount of disk space used or allocated by the specified directory including the subdirectories. When no file is specified the current directory is used.

Command Format

du [–ks] [file]

Options/Arguments/Variables	Description
–k	Displays the size of space in kilobytes. The default display units are in 512–byte blocks.
–s	Displays only the total disk space used.
file	Path name of file or directory whose size is to be displayed.

Example(s)	Output Description
%**du** *–ks*<**CR**>	Displays the total disk space used by the current directory.

Command

dmesg

The **dmesg** command looks in the system buffer for recent diagnostic messages and displays them to screen.

Command Format

dmesg

Options/Arguments/Variables	Description
None	

Example(s)	Output Description
%**dmesg**<**CR**>	Displays recent diagnostics messages.

Command

prtconf

The **prtconf** command displays the system configuration information.

Command Format

prtconf

Options/Arguments/Variables	Description
None	

Example(s)	Output Description
%**prtconf** | *grep Memory*<CR>	Displays the system configuration with a pipe (|) to grep on the word Memory (system memory).

Command

mount *SU*

The **mount** command is used to display a list of currently mounted file systems, their respective mount points and the time the systems were mounted. This command is normally done by a Superuser from root directory.

Command Format

mount

Options/Arguments/Variables	Description
None	

Example(s)	Output Description
#**mount**<CR>	Displays a list of mounted file systems, their mount points and the time mounted.

Command

mountall *SU*

The **mountall** command mounts file systems specified in a file system table. The /etc/vfstab is the default file system table. This command is normally done by a Superuser from root directory.

Command Format

mountall

Options/Arguments/Variables	Description
None	

Example(s)	Output Description
#mountall<CR>	Mounts the file systems listed in the /etc/vfstab file system table.

4.3.4.3.9 File Access Ownership/Permissions. The following commands are discussed in this section:

- **chmod**
- **chown**
- **chgrp**

Command

chmod

The **chmod** command is used to change the permissions of the files. Permissions can only be changed by the current owner or Superuser. The modes may be absolute or symbolic.

Command Format

Absolute Mode:

chmod [–R] [nnn] file

Symbolic Mode:

chmod [–R] [ugoa] [+–=] [rwx] file

Options/Arguments/Variables	Description
–R	Recursively descend through directory arguments, setting the mode for each file as described.
nnn	Three numbers from 0 to 7 denoting different levels of permissions. Each digit representing the user, group, and others, respectively. 4 = read permission 2 = write permission 1 = execute permission These permissions can be added in any combination to allow combination permissions. (i.e., a 5 would equate to read and execute permissions)

Options/Arguments/Variables	Description
u	Designates user's permissions.
g	Designates group's permissions.
o	Designates other's permissions.
a	Designates permissions for user, group, and other's.
+	Add permissions. If omitted, do not add permissions.
–	Take away permissions. If omitted, do nothing.
=	Assign permissions absolutely. If omitted, do nothing.
r	Read permission
w	Write permission
x	Execute permission
file	Name of file(s) or directory(s) to change the permissions for.

Example(s)	Output Description
%**chmod** *555 cm_ping*<**CR**>	Using absolute mode, gives user, group, and others read and execute permissions for the cm_ping file.
%**chmod** *a=rx cm_ping*<**CR**>	Using symbolic mode, gives user, group, and others read and execute permissions for the cm_ping file.
%**chmod** *–R 777 **</CR>	Using absolute mode, gives read, write, and execute permissions to all for all files in the current directory recursively through subdirectories if they exist.
%**chmod** *–R a+rwx **</CR>	Using symbolic mode, gives read, write, and execute permissions to all for all files in the current directory recursively through subdirectories if they exist.
%**chmod** *664 *.logs*<**CR**>	Using absolute mode, gives read and write permissions to users, and groups. Others have read only permission. Applied to all files in current directory with log as an extension name.
%**chmod** *ug=rw,o=r *.logs*<**CR**>	Using symbolic mode, gives read and write permissions to users, and groups. Others have read only permission. Applied to all files in current directory with log as an extension name.

Example(s)	Output Description
%**chmod** *755 rpg.server*<**CR**>	Using absolute mode, gives read, write, and execute permissions to user. Group and others have read and execute permissions for the file rpg.server.
%**chmod** *a=rwx,go–w rpg.server*<**CR**>	Using symbolic mode, gives read, write, and execute permissions to all, then subtracts write permission from group and others. Thus, group and others have read and execute permissions for the file rpg.server.

Command

chown

The **chown** command assigns a new owner to the specified file. Must be performed by the current file owner or Superuser.

Command Format

chown [–R] owner file

Options/Arguments/Variables	Description
–R	Recursively descend through subdirectories, setting the mode for each directory as described.
owner	The new owner ID to assign to the file.
file	The file or directory whose user is to be modified.

Example(s)	Output Description
%**chown** *ob1 /data*<**CR**>	Changes ownership of the /data directory to ob1.

Command

chgrp

The **chgrp** command allows the current owner or Superuser to set the group ID to the file specified.

Command Format

chgrp [–R] [group] file

Options/Arguments/Variables	Description
–R	Recursively descend through subdirectories, setting the mode for each directory as described.
group	The new group ID assigned.
file	The file or directory whose group ID gets modified.

Example(s)	Output Description
%**chgrp** *–R rpg /data***<CR>**	Changes the group ID to rpg recursively for the /data directory.

4.3.4.3.10 Printing. The following commands are discussed in this section:

- **lp**
- **lpstat**
- **cancel**

Command

lp

The **lp** command submits a print request

Command Format

lp file

Options/Arguments/Variables	Description
file	File to be printed

Example(s)	Output Description
%**lp** */etc/hosts***<CR>**	Sends print request to printer to print the hosts file called in the /etc directory.

Command

lpstat

The **lpstat** command displays the status of all the user's print requests that have been sent to it. It also displays the job number which is needed if the user wants to cancel a specific print job.

Command Format

lpstat

Options/Arguments/Variables	Description
None	

Example(s)	Output Description
%**lpstat<CR>**	Prints the status of the user's print requests.

Command

cancel

The **cancel** command cancels print requests.

Command Format

cancel –u user [destination]

Options/Arguments/Variables	Description
–u user	The user who sent the original print request.
destination	The name of the printer to where the requests were sent. If not given, all print jobs to all destinations are canceled for the user specified.

Example(s)	Output Description
%**cancel** *–u krex***<CR>**	Cancels all print jobs requested by the user krex.

4.3.4.3.11 Removable Media. The following commands are discussed in this section:

- **eject**
- **tar**
- **compress**
- **uncompress**
- **gzip**
- **ufsdump**

- **ufsrestore**

Command

eject

The **eject** command is used to eject removable media in a drive that does not have a manual eject button. When the **eject** command is used with media that can be manually ejected, the media is unmounted, but not ejected. The device can be listed by its name or nickname. As default, when no name or nickname is listed, the disk platter in the CD–ROM tray is ejected unless the floppy was last mounted, in which case the floppy is unmounted.

Command Format

eject [device name] [device nickname]

Options/Arguments/Variables	Description
device name	Specify the device to eject by its name.
device nickname	Specify the device to eject by its nickname.

Example(s)	Output Description
%eject *floppy***<CR>**	Using the device nickname, floppy, the eject command is executed for the floppy disk drive.

Command

tar

The **tar** command creates a tape archive file. It creates a single tar_file that contains all the files listed. The **tar** command allows a user to write several files to a single location, be it another file or removable media, etc. The **tar** command does not alter the original files.

Command Format

tar [ctxvf] [tar_file] files

Options/Arguments/Variables	Description
c	Create a tape archive, a tar file.
t	List table of contents of tape archive to screen.
x	Extract the file–list from a tape archive to the user's current directory.

Options/Arguments/Variables	Description
v	Verbose. Echo file names to screen at completion.
f	Use the tar_file listed as the name of the tar file. Must immediately precede the tar_file name.
tar_file	The device name or file name where the tar file will be written. If omitted, then the device indicated by the TAPE environment variable is the default. The tar_file must follow immediately the –f option.
files	Names of files or directory to run the tar program on.

Example(s)	Output Description
%**tar** *cvf /jaz/rpgapps.tar .* **<CR>**	Archive all files from the current directory to a file named "rpgapps.tar" on the Jaz disk cartridge (mounted at */jaz*).
%**tar** *tvf krex.tar***<CR>**	Lists a table of contents of the files in the krex.tar file echoed to screen.
%**tar** *xvf /jaz/users.tar***<CR>**	Extract all user account directories in the "users.tar" file to the current directory. While extracting the verbose option lists to screen the file names.

Command

compress

The **compress** command compresses a file to use less disk space. The old file name is replaced with the original file name and a .Z extension. If the original file will not become smaller it will not be compressed.

Command Format

compress file

Options/Arguments/Variables	Description
file	The name of the file to be compressed.

Example(s)	Output Description
%compress *mscf_users.tar***<CR>**	The file mscf_users.tar will be compressed. New file name will be mscf_users.tar.Z.

Command

uncompress

The **uncompress** command restores a previously compressed file. The previously compressed file must have the extension, ".Z". The restored file has the same file name without the ".Z" extension.

Command Format

uncompress file.Z

Options/Arguments/Variables	Description
file.Z	The path name of the file to be restored with a .Z suffix.

Example(s)	Output Description
%uncompress *krex.tar.Z***<CR>**	The compressed file krex.tar.Z will be restored to its original state. The file retains its original file name which is krex.tar.

Command

gzip

The **gzip** command makes a separate compressed file for each file named. The new files have the same names as before with the suffix .gz added. Compression is always performed, even if the compressed file will be slightly larger than the original. The **gzip** command preserves the mode, ownership and time stamps of files when compressing or decompressing. The same command with a –d option is used to decompress files.

Command Format

gzip [–cdtv] file

Options/Arguments/Variables	Description
–c	Write output on standard output; keep original files unchanged.
–d	Decompress the files with the .gz suffix.
–t	Test. Check the compressed file integrity.
–v	Verbose. Display the name and percentage reduction for each file compressed or decompressed.
file	Name of file to gzip.

Example(s)	Output Description
%**gzip** *–tv /export/home/krez/*.tar*<**CR**>	Compress all the tar files in the /export/home/krex directory. Test file integrity after compression, and write file names and percentage reduction to screen as occurs. Each file has a .gz suffix added to its name.
%**gzip** *–dt *.tar.gz*<**CR**>	Decompress all *.tar files with the .gz suffix. Test for file integrity after decompression. Uncompressed files will not have a .gz suffix.

Command

ufsdump

The **ufsdump** command allows software to be backed up individually for each file system. This allows software to be restored individually for each file system. Thus, restoration of one file system can be done without having to restore all file systems at the same time. If no options are given, the defaults are 9uf and /dev/rmt/Øn.

Command Format

ufsdump [0–9] [cu] [f dump_file] files–to–dump

Options/Arguments/Variables	Description
0–9	The dump level. A level 0 copies the entire file system. For numbers 1 through 9, it dumps all files that have been modified since the last usfdump at a lower dump level. The lower the level number, the more complete the dump.
c	Sets the defaults for a cartridge media.
u	Update the dump record. Add an entry to the file /etc/dumpdates for each file system successfully dumped that includes file system name, date, and dump level.
f dump_file	Use dump_file as the file or device to dump to, instead of /dev/rmt/Øn which is the default.
files–to–dump	Specifies the files to dump. Can be a whole file system, or a directory. This is a required entry.

Example(s)	Output Description
%**ufsdump Øucf /jaz/exp_home /export/home <CR>**	This will complete a level 0 dump of the /export/home file system to a file named exp_home onto the Jaz disk cartridge. Also updates the dump record when completed successfully.

Command

ufsrestore

The **ufsrestore** command restores files from backup media created with the ufsdump command. If no dump_file is named, then /dev/rmt/Ø is used to restore from.

Command Format

ufsrestore [tvx] [f dump_file] filename

Options/Arguments/Variables	Description
t	Table of contents. List each file name that appears on the media.
v	Verbose. Displays the name and inode number of each file it restores, preceded by a file type.
x	Extract the named files from the media. If no files are named, the root directory is extracted.
f dump_file	Use dump_file instead of /dev/rmt/Ø as the file or device to restore from.
filename	Specifies the pathname of files to be restored to disk.

Example(s)	Output Description
%**ufsrestore xvf /jaz/ exp_home<CR>**	This will restore all files from the exp_home file on the Jaz disk cartridge and place them in the user's current directory. The verbose option displays these file names as they are restored.

4.3.4.3.12 Networking. The following commands are discussed in this section:

- **telnet**
- **ping**
- **ftp**

Command

telnet

The **telnet** command is a user interface to a remote system. It allows the user to communicate with another host using the TELNET protocol. The hostnames are listed in the /etc/hosts file. The login user must be listed at the remote terminal in the /etc/passwd file as a user. After connecting the user is prompted for a login name and password.

Command Format

telnet host

Options/Arguments/Variables	Description
host	The remote host or the IP–address of the remote host that the user wants to communicate with. If only a host is specified, it must be referenced to an IP–address in the user's local /etc/hosts file.

Example(s)	Output Description
%**telnet** *krex***<CR>**	Establishes a telnet session with the remote host krex.

Command

ping

The **ping** command sends ICMP Echo Request packets to host once per second. Each packet that is echoed back via an ICMP Echo Response packet is written to the standard output, including round–trip time. By default (when packet–size is not specified), the size of transmitted packets is 64 bytes. The minimum value allowed for packet–size is 8 bytes, and the maximum is 4095 bytes.

Command Format

ping [–s] host [packetsize]

Options/Arguments/Variables	Description
–s	Causes ping to send one datagram per second and display one line of output for every Echo_Response that it receives. To quit, enter **<Ctrl> C**.
host	The network remote host or the IP–address of the remote host. If only a host name is specified, it must be referenced to an IP–address in the local /etc/hosts file.
packetsize	The size of the transmitted packet, in bytes.

Example(s)	Output Description
%**ping** *roc4***<CR>**	If the host roc4 responds, the feedback is `roc4 is alive`, otherwise after time–out, the feedback is `no answer from roc4`.

Command

ftp

The **ftp** command is a user interface to the File Transfer Protocol. The **ftp** command transfers files between the local client host and a remote server host. If the server host is specified, ftp immediately opens a connection to the server host. Otherwise, ftp waits for command input from the user. After a connection is open, the user is prompted for a user name and password. To exit from ftp, type **quit<CR>** at the ftp prompt.

Command Format

ftp [host]

Options/Arguments/Variables	Description
host	The network remote host or the IP–address of the remote host. If only a host is specified, it must be referenced to an IP–address in the user's local /etc/hosts file.

Example(s)	Output Description
% **ftp** *roc4***<CR>**	Establishes an ftp session with a remote host called roc4.

4.3.4.3.13 Miscellaneous User Commands. The following commands are discussed in this section:

- **who**
- **whoami**
- **passwd**
- **cal**
- **date**

Command

who

The **who** command lists the user's name, terminal line, login time elapsed time since input activity occurred on the line, the user's hostname, and the PID of the shell for each current system user.

Command Format

who [am i]

Options/Arguments/Variables	Description
am i	Limits the output to information about the invoking user. The command who am i reports the initial login name. For example: after logging in, a user has switched user names, then the who am i command displays the logged in user name.

Example(s)	Output Description
% **who<CR>**	Displays information about any users on the current machine.
% **who** *am i***<CR>**	Displays information describing the initial login user .

Command

whoami

The **whoami** command displays the current user name.

Command Format

whoami

Options/Arguments/Variables	Description
None	

Example(s)	Output Description
%**whoami<CR>**	List the current user name.

Command

passwd

The **passwd** command allows the user to change their user password. For security purposes the password should be routinely changed and software is configured to require a change every 90 days. For the user and system security, the password must be at eight characters long, and have at least one non–alphanumeric character in it, and differ from the old password by at least 3 characters.

Command Format

passwd [user]

Options/Arguments/Variables	Description
user	The login id of another user. This option is allowed only to the Superuser, normally the system administrator. If user is omitted, the system defaults to the invoking user's login name.

Example(s)	Output Description
%**exit<CR>** (only required at MSCF and RPG) %**passwd<CR>** %**csh<CR>** (only required at MSCF and RPG)	The exit command removes the user from the applications shell. The passwd command starts the passwd utility to change the password for the logged in user. If there is an old password, the user is prompted for it. Then the passwd utility prompts for the new password twice. The csh command places the user back into the applications shell.

Command

cal

The **cal** command displays a calendar. When used by itself, the **cal** command displays the current month and year. The year can be between 1 and 9999. The month is a decimal number between 1 and 12.

Command Format

cal [month year] [year]

Options/Arguments/Variables	Description
month year	If a month and year is specified, a calendar for that month and year is printed
year	If a year is specified, the specified calendar year is printed.

Example(s)	Output Description
%**cal<CR>**	Prints the calendar for the current month and year.
%**cal** *2 1977***<CR>**	Prints a calendar for February 1977.
%**cal** *2ØØ4***<CR>**	Prints an annual calendar for the year 2004.

Command

date *SU*

The **date** command displays or sets the current system clock date and time. Used by itself current local system date and time is displayed. Only the Superuser can change the date on the system.

Command Format

date [–u] [[mmdd]HHMM[yy]][.SS]

Options/Arguments/Variables	Description
–u	Displays or sets the current date and time in Greenwich Mean Time (GMT).
mmddHHMM	Set the month, day, hour, minutes.
yy	Last two digits of year. Sets the year; must be used with the mmddHHMM option.
.SS	Sets the seconds, notice it is preceded with a period (.).

Example(s)	Output Description
#**date<CR>**	Gives the current date and time in default format.
#**date** *–u***<CR>**	Displays the current date and time in GMT.
#**date** *1ØØ8ØØ45***<CR>**	Set the date and time as Oct. 8, 12:45 a.m. The year has been left off and the default is the current year.
#**date** *–u 1234.56***<CR>**	Sets the system time to GMT time of 12:34:56. The month, day, and year have been omitted and the default is the current month, day, and year.

4.3.4.3.14 Miscellaneous System Administrator Commands. The following commands are discussed in this section:

- **su**
- **sync**
- **reboot**
- **init**
- **halt**
- **kill**
- **crontab**
- **snoop**

Command

su *SU*

The switch **su** command allows one user to become another user without logging out. Used by itself the default name is root (i.e., Superuser). Appropriate passwords must be known by the user. Normally used only by the system administrator.

Command Format

su [–] [user]

Options/Arguments/Variables	Description
–	If the dash (–) option is specified, the environment is passed along unchanged, as if the user has actually logged in as the specified user.
user	The specified user name the current user wants to switch to.

Example(s)	Output Description
%**su<CR>**	Change the current user to Superuser (root).
%**su** *roc4***<CR>**	Change the current user to the new user *roc4*.

Command

sync *SU*

The **sync** command causes all information in memory that should be on disk to be written out, thus ensuring all file modifications are saved to disk. Normally used only by the system administrator.

Command Format

sync

Options/Arguments/Variables	Description
None	

Example(s)	Output Description
#%**sync<CR>**	Causes all changes made to files to be written to disk.

Command

reboot *SU*

The **reboot** command restarts the kernel. First, **reboot** performs a sync operation and then a multi–user reboot is initiated. Must be a Superuser to reboot. Used by itself the system reboots and the user is returned to a CDE Login screen. Normally used only by the system administrator.

Command Format

reboot [–– –r]

Options/Arguments/Variables	Description
–– –r	The double dashes (––) tell the system to ignore any reboot options and then gives a boot argument of –r which causes the system to look for newly installed hardware when booting.

Example(s)	Output Description
#**reboot<CR>**	System reboots and the user is returned to a CDE Login screen.
#**reboot** –– –*r***<CR>**	Reboot the system in reconfiguration mode. Causes the system to look for newly installed hardware.

Command

init *SU*

The **init** command is a general process spawner. Its primary role is to create processes from a script stored in the file /etc/inittab. The **init** considers the system to be in some run level at any given time. A run level can be viewed as a software configuration of the system, where each configuration allows only a selected group of processes to exist. The processes spawned by **init** for each of these run levels are defined in the inittab file. Must be Superuser to execute. Normally used only by the system administrator.

Command Format

init [1–6] [s]

Options/Arguments/Variables	Description
Ø–6	0 Firmware/boot PROM level. When complete, user is presented with an `ok` prompt. 1 System administrative mode. No users logged in, but all files systems mounted and accessible to system administrator. 2 Multi–user mode without network support. 3 Multi–user mode with network support (default). 4 Alternative multi–user environment configuration. 5 Shuts machine down so it is safe to power off. 6 Stops operating system and reboots to the default init state. Returns user to CDE Login screen.
s	Single–user mode.

Example(s)	Output Description
#init *6***<CR>**	Performs a system reboot. This procedure is complete. When the system boots, the system re–starts automatically and returns the user to a CDE Login screen.

Command

halt *SU*

The **halt** command halts the processor. It is part of powering off. It performs a sync and then stops the processor. After execution, the power button to the computer can be shut off. Must be Superuser to execute. Normally used only by the system administrator.

Command Format

halt

Options/Arguments/Variables	Description
None	

Example(s)	Output Description
#**halt<CR>**	Performs a sync then halts the processor. Computer is ready to be powered off.

Command

kill *SU*

The **kill** command sends a signal to each process specified by a process identification number. Normally used only by the system administrator.

Command Format

kill [–9] PID

Options/Arguments/Variables	Description
–9	Abrupt and immediate kill.
PID	Process identification number.

Example(s)	Output Description
%**kill** *6135***<CR>**	Signals PID 6135 to terminate. This gives the process an opportunity to exit gracefully (removing temporary files, etc.).
%**kill** *–9 235***<CR>**	Signals PID 235 for an abrupt (–9) kill.

Command

crontab *SU*

The **crontab** command manages a user to copy, create, list, and removing crontab files. If invoked without options, crontab copies the specified file, or the standard input if no file is specified, into a directory that holds all users' crontabs. It manages a file commonly called cronfile for the system administrator. When utilized, cronfile automatically executes scheduled jobs on a regular basis.

Command Format

crontab [–elr] [file]

Options/Arguments/Variables	Description
–e	Opens the crontab file for editing, or creates an empty file to edit if crontab does not exist. When editing is completed and saved the file is installed as the user's crontab file.
–l	Lists the jobs contained in the crontab file.
–r	Remove the crontab file from the crontab directory.
file	Create or replace the crontab file by copying the specified file, into the crontab directory.

Example(s)	Output Description
%**crontab** *cronfile*<**CR**>	Submit the cronfile file to cron.
%**crontab** *–r*<**CR**>	Remove the cronfile file from cron.

Command

snoop *SU*

The **snoop** command captures packets from the network and displays their contents. A **snoop** uses both the network packet filter and streams buffer modules to provide efficient capture of packets from the network. Captured packets can be displayed as they are received, or saved to a file for later inspection. If used by itself, **snoop** captures all packets and displays them as they are received. Normally used only by the system administrator.

Command Format

snoop [–d device] [host]

Options/Arguments/Variables	Description
–d device	Receive packets from the network using the interface specified by device.
host	To display packets only transmitted or received by the host specified.

Example(s)	Output Description
#**snoop<CR>**	Capture all packets and displays them as they are received. To quit enter **<Ctrl> C**.
#**snoop** *–d hmeØ roc4***<CR>**	Captures all packets to or from host roc4 on the network hmeØ.

4.3.5 USE OF VI.

One of the text editor on the Unix system is vi. vi is a text editor program that can be used to create and modify text files.

The key to learning vi is to always keep in mind the difference between edit–text mode and command mode.

In the command mode, as its name implies, a user issues commands to edit files, save files, and exit vi.

While in the edit–text mode, typed characters are displayed on the screen, whereas in command mode, typed characters do not appear on the screen.

By far the most frequent problem new vi users have is confusion over the current mode. The user forgets they are in edit–text mode, and so the user's commands are not obeyed and entered as text to the document being edited.

To open a (new or existing) file for editing type **vi** *filename***<CR>** at the command prompt. The **vedit** *filename***<CR>** may be used by people new to using the vi editor. If the filename already exists, the file is opened for editing.

The **vedit** command is intended for beginners. It is the same as vi except that the showmode is set. The showmode informs the users which specific command mode is being used currently. This default make it easier to learn how to use vi.

To escape edit–text mode and enter command mode, press the **<ESC>** key. Commands such as a (append), o (new line) and i (insert) place the user in edit–text mode.

Basic vi commands. The bare–bones set of command mode commands are introduced below.

Command(s)	Description
a	Append to right of current cursor position.
o	Create new blank line to add text.
i	Insert text to left of current cursor position.
h or left arrow key	Move cursor one character to left.
j or down arrow key	Move cursor one line down.
k or up arrow key	Move cursor one line up.
l or right arrow key	Move cursor one character to right.
w	Move cursor one word to right.
b	Move cursor one word to left.
Ø	Move cursor to beginning of line.
$	Move cursor to end of line.
n*G*	Move cursor to line n.
<Ctrl> f	Scroll forward one screen.
<Ctrl> b	Scroll backward one screen.
dw <ESC>	Delete current word.
cw <ESC>	Change current word.
r	Change current character.
~	Change case (upper–, lower–) of current character.
dd	Delete current line.
D	Delete portion of current line to right of the cursor.
x	Delete current character.
u	Undo the last command.
.	Repeat the last command.
J	Combine (join) next line with this one.
:w<CR>	Write file to disk, stay in vi.
:q!<CR>	Quit VI, do not write file to disk.
:wq!<CR> or **ZZ<CR>**	Write file to disk, quit vi.
:r *filename***<CR>**	Read in a copy of the specified file to the current buffer.
/*string***<CR>**	Search forward for string.
?*string***<CR>**	Search backward for string.
n	Repeat the last search (next search).

When the user needs to insert a control character (^) into a text document, while in insert–text mode, press **<Ctrl> v** first. For example, to insert a *^G* into the file being edited, type **<Ctrl> v** then **^G**.

One of vi's advantages is easy cursor movement. Since the keys h,j,k,l are adjacent and easily accessible with the fingers of the right hand, a user can quickly reach them to move the cursor, instead of using the directional arrow keys as with many other editors (though they can be used in vi too).

Many of the commands can be prefixed by a number. For example, **3dd** means to delete (consecutive) three lines, starting with the current one. As an another example, **4cw** deletes the next four words.

Section 4.4. Controls and Indicators

NOTE

This chapter and its corresponding sections refer to the RPGPCA as UD70. Unless otherwise specified for FAA redundant systems, this information also applies to RPGPCA UD170.

4.4.1 GENERAL.

All of the external controls and indicators for the RPGPCA Group (UD70), and the MSCF Workstation (UD71/UD79) are identified, located, and described in this section. (All of the internal controls and indicators for the RPGPCA and the MSCF Group components are identified as needed for fault isolation in Section 6.3 and 6.4.) This section provides figures and tables for use in the identification, location, and description of the RPG equipment external controls and indicators. The tables contain the following information in columns:

4.4.1.1 Figure and Index No. Column. Figure and Index No. column: the numbers refer to the specific controls or indicators called out in the designated figure.

4.4.1.2 Control/Indicator Nomenclature Column. Control/Indicator Nomenclature (Type) column :lists panel nomenclature of the controls or indicators and their type.

4.4.1.3 Function Column. Function column: describes the purpose of each control or indicator.

4.4.1.4 Normal Position/State Column. Normal Position/State column: lists the normal position/state of each control or indicator.

4.4.2 REMOTE RDA MAINTENANCE TERMINAL UD32.

For convenience due to proximity, the Remote RDA Maintenance Terminal UD32 (Figure 1–4), is considered part of the RPG group for NWS redundant systems. Its controls and indicators are located on the following equipment:

- Dual A/B Switch (Black Box) UD32A2
- STATMUX (Penril VCX–150) UD32A3
- Dial Port Modem (Codex 326x) UD32A4 (Stand Alone)
- RRRAT CPU (Compaq) UD32A9
- RRRAT Monitor (Compaq) UD32A10
- RRRAT Keyboard UD32A11

4.4.2.1 Remote Maintenance Terminal (Compaq) UD32A10 Controls and Indicators. See Figure 4–10 and refer to Table 4–3 for a description of the Remote Maintenance Terminal controls and indicators.

4.4.2.2 Dual A/B Switch (Black Box) UD32A2 Controls and Indicators. See Figure 4–11 and refer to Table 4–4 for a description of the Dual A/B Switch controls.

4.4.2.3 STATMUX (Penril VCX–150) UD32A3 Controls and Indicators. See Figure 4–12 and refer to Table 4–5 for a description of the STATMUX controls and indicators.

4.4.2.4 Dial–port Modem (Codex 326x) UD32A4 Controls and Indicators. See Figure 4–13 and refer to Table 4–6 for a description of the Dial–port modem controls and indicators.

4.4.3 RPG PROCESSOR/COMMUNICATIONS ASSEMBLY CABINET UD70/170.

The controls and indicators for the RPGPCA cabinet UD70 (Figure 1–3) are located on the following equipment:

- BDDS Processor (Sun Ultra 5) UD70A1
- Router (Cisco 3640) UD70A2
- KVM Switch (Raritan SMX18) UD70A3
- RPG 17–Inch Monitor (Sun) UD70A4
- RPG Keyboard and Mouse (Sun) UD70A5/A6
- RPG Processor (Sun Ultra 10) UD70A7
- Archive Storage Device (Iomega Jaz) UD70A8/UD70A9
- Power Administrator (APC MasterSwitch) UD70A10
- UPS (APC SmartUPS 1400) UD70A11
- RDA/RPG Gateway (Polycom) UD70A12
- LAN Switch (Cisco 2924) UD70A13
- Dial Port Modem (Codex 3262) UD70A14A1–A4 and Dedicated Port Modem (Codex 3263) UD70A14A5–A21
- Dedicated/Dial Modem Rack Assembly (Codex 326X) UD70A14
- Communication Server (PTI MPS 800) UD70A15/A16/A17
- Channel Service Unit UD70A18
- Short Haul Modem UD70A19
- RS–232/RS–422 Converter (Black Box) UD70A20
- AC Power Distribution Panel UD70A22
- RMS Power Administrator (Baytech RPC–5) UD70/170A28 and UD70/170A29

4.4.3.1 BDDS Processor (Sun Ultra 5) UD70A1 Controls and Indicators. See Figure 4–14 and refer to Table 4–7 for a description of the Sun BDDS Processor controls and indicators.

4.4.3.2 Router (Cisco 3640) UD70A2 Controls and Indicators. See Figure 4–15 and refer to Table 4–8 for a description of the Cisco Router controls and indicators.

4.4.3.3 KVM Switch (Raritan SMX18) UD70A3 Controls and Indicators. See Figure 4–16 and refer to Table 4–9 for a description of the Raritan KVM Switch controls and indicators.

4.4.3.4 RPG 17–Inch Monitor (Sun) UD70A4 Controls and Indicators. See Figure 4–17 and refer to Table 4–10 for a description of the Sun RPG 17–Inch Monitor controls and indicators.

4.4.3.5 RPG Keyboard and Mouse (Sun) UD70A5/UD70A6 Controls and Indicators. See Figure 4–18 and refer to Table 4–11 for a description of the Sun RPG Keyboard and Mouse controls and indicators.

4.4.3.6 RPG Processor (Sun Ultra 10) UD70A7 Controls and Indicators. See Figure 4–19 and refer to Table 4–12 for a description of the Sun RPG Processor controls and indicators.

4.4.3.7 Archive Storage Device (Iomega Jaz) UD70A8 and UD70A9 Controls and Indicators. See Figure 4–20 and refer to Table 4–13 for a description of the Jaz Archive Storage Device controls and indicators.

4.4.3.8 Power Administrator (APC MasterSwitch) UD70A10 Controls and Indicators. See Figure 4–21 and refer to Table 4–14 for a description of the APC Power Administrator controls and indicators.

4.4.3.9 UPS (APC SmartUPS 1400) UD70A11 Controls and Indicators. See Figure 4–22 and refer to Table 4–15 for a description of the APC UPS controls and indicators.

4.4.3.10 RDA/RPG Gateway (Polycom) UD70A12 Controls and Indicators. See Figure 4–23 and Table 4–16 for a description of the Polycom RDA/RPG Gateway controls and indicators.

4.4.3.11 LAN Switch (Cisco 2924) UD70A13 Controls and Indicators. See Figure 4–24 and refer to Table 4–17 for a description of the Cisco LAN Switch controls and indicators.

4.4.3.12 Dedicated/Dial Modem Rack Assembly (Codex 326X) UD70A14 Controls and Indicators. See Figure 4–25 and Figure 4–26 and refer to Table 4–18 for a description of the Dedicated/Dial Modem Rack Assembly controls and indicators and the backplane.

4.4.3.13 Dial Port Modem (Codex 3262) UD70A14A1–A4 and Dedicated Port Modem (Codex 3263) UD70A14A5–A21 Controls and Indicators. See Figure 4–27 and refer to Table 4–19 for a description of the Dial/Dedicated Port Modem controls and indicators.

4.4.3.14 Communication Server (PTI MPS 800) UD70A15, UD70A16, UD70A17 Controls and Indicators. See Figure 4–28 and refer to Table 4–20 for a description of the PTI Communication Servers controls and indicators.

4.4.3.15 Channel Service Unit (CSU) UD70A18 Controls and Indicators. See Figure 4–29 and refer to Table 4–21 for a description of CSU controls and indicators.

4.4.3.16 Short Haul Modem UD70A19 Controls and Indicators. See Figure 4–30 and refer to Table 4–22 for a description of the Short Haul Modem controls and indicators.

4.4.3.17 RS–232/RS–422 Converter (Black Box) UD70A20 Controls and Indicators. The RS–232/RS–422 Converter is used in the RPGPCA only if the RPG is collocated with the PUP. See Figure 4–31 and refer to Table 4–23 for a description of the RS–232/RS–422 Converter indicators.

4.4.3.18 AC Power Distribution Panel UD70A22 Controls and Indicators. See Figure 4–32 and refer to Table 4–24 for a description of the AC Power Distribution Panel controls and indicators.

4.4.3.19 RMS Power Administrator (Baytech RPC–5) UD70/170A28/A29 Controls and Indicators. See Figure 4–33 and refer to Table 4–25 for a description of the Baytech RMS Power Administrator controls and indicators.

4.4.4 MSCF WORKSTATION UD71.

The controls and indicators for the MSCF Workstation UD71 (Figure 1–5) are located on the following equipment:

- MSCF Processor (Sun Ultra 5) UD71A1
- 21–Inch Monitor (Sun) UD71A2
- Keyboard and Mouse (Sun) UD71A3 and UD71A4
- MSCF Dedicated–port Modem (Codex) UD71A5 (DoD and FAA only)
- Backup Storage Device (Iomega Jaz) UD71A6
- Frame Relay Hub Router UD75 (DoD and FAA only)

4.4.4.1 MSCF Processor (Sun Ultra 5) UD71A1 Controls and Indicators. See Figure 4–34 and refer to Table 4–26 for a description of the Sun MCSF Processor controls and indicators.

4.4.4.2 21–Inch Monitor (Sun) UD71A2 Controls and Indicators. See Figure 4–35 and refer to Table 4–27 for a description of the Sun MSCF 21–Inch Monitor controls and indicators.

4.4.4.3 Keyboard and Mouse (Sun) UD71A3/UD71A4 Controls and Indicators. See Figure 4–18 and refer to Table 4–11 for a description of the Sun Keyboard and Mouse controls and indicators.

4.4.4.4 MSCF Dedicated–port Modem (Codex) UD71A5 Controls and Indicators. A Dedicated–port modem is used at the MSCF with a Distant MSCF at DoD and FAA sites. See Figure 4–36 and refer to Table 4–28 for a description of the Dedicated–port Modem controls and indicators.

4.4.4.5 Backup Storage Device (Iomega Jaz) UD71A6 Controls and Indicators. See Figure 4–37 and refer to Table 4–29 for a description of the Jaz Backup Storage Device controls and indicators.

4.4.4.6 Frame Relay Hub Router (Cisco 2621 XM) UD75. A router is used at the MSCF with some DoD and FAA sites. See Figure 4–38 and refer to Table 4–30 for a description of the Frame Relay Hub Router controls and indicators.

4.4.5 PRINTER UD79.

The MSCF Color Printer UD79 is normally located near the vicinity of the MSCF Workstation (Figure 1–5). The controls and indicators for the Printer Group are located on the following equipment:

- MSCF Color Printer (Xerox/Tektronix Phaser 750) UD79A1

4.4.5.1 MSCF Color Printer (Xerox/Tektronix Phaser 750) UD79A1 Controls and Indicators. See Figure 4–39 and refer to Table 4–31 for a description of the Xerox/Tektronix Color Printer controls and indicators.

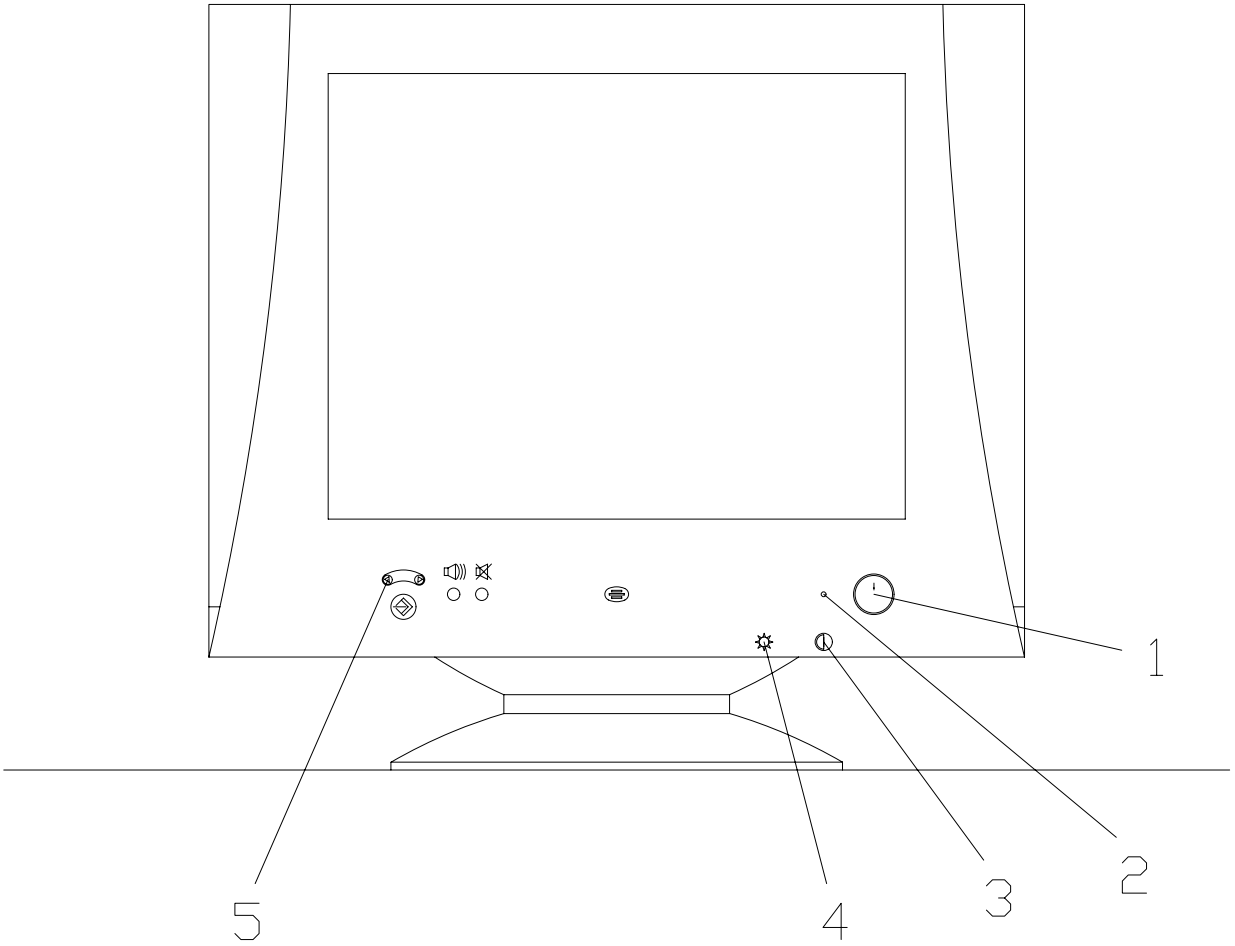

NX1603

Figure 4–10. Remote Maintenance Terminal (Compaq) UD32A10

Table 4–3. Remote Maintenance Terminal (Compaq) UD32A10 Controls and Indicators

Figure 4–10 Index No.	Control/Indicator Nomenclature (Type)	Function	Normal Position/ State
1	Power Switch	Provides power to terminal.	ON
2	Power LED	Indicates power situation.	ON
3	Contrast Control	Adjusts the contrast.	N/A
4	Brightness Control	Adjusts the overall screen brightness.	N/A
5	On Screen Display Menu Button	Controls picture image. Refer to RRRAT User's Guide for complete description of each menu function.	N/A

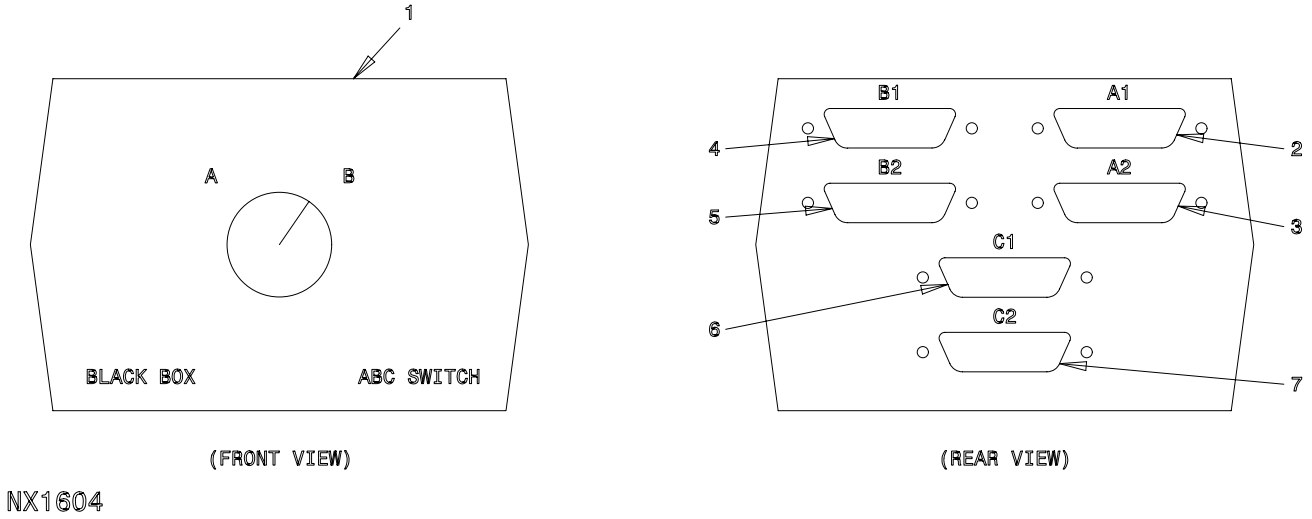

Figure 4–11. Dual A/B Switch (Black Box) UD32A2

Table 4–4. Dual A/B Switch (Black Box) UD32A2 Controls and Indicators

Figure 4–11 Index No.	Control/Indicator Nomenclature (Type)	Function	Normal Position/ State
1	A/B	The "A" position switches application and system ports of NWS RDA Channel 1 (UD105) to the Remote RDA Maintenance Terminal/CPU UD32A10/A9. The "B" position switches application and system ports of NWS RDA Channel 2 (UD5) to the Remote RDA Maintenance Terminal/CPU UD32A10/A9.	Set to active channel.
2	A1	UD32A2A1 port connects to the NWS RDA channel 1 (UD105) via STATMUX UD32A3 Port 1.	N/A
3	A2	UD32A2A2 port connects to NWS RPG Channel 1 (UD105) via STATMUX UD32A3 Port 2.	N/A
4	B1	UD32A2B1 port connects to NWS RDA Channel 2 (UD5) via STATMUX UD32A3 Port 3.	N/A
5	B2	UD32A2B2 port connects to the RDA Channel 2 UD5 via STATMUX UD32A3 Port 4.	N/A
6	C1	UD32A2C1 port connects to CPU UD32A9 Comm Port B.	N/A
7	C2	UD32A2C2 port connects to CPU UD32A9 Comm Port A.	N/A

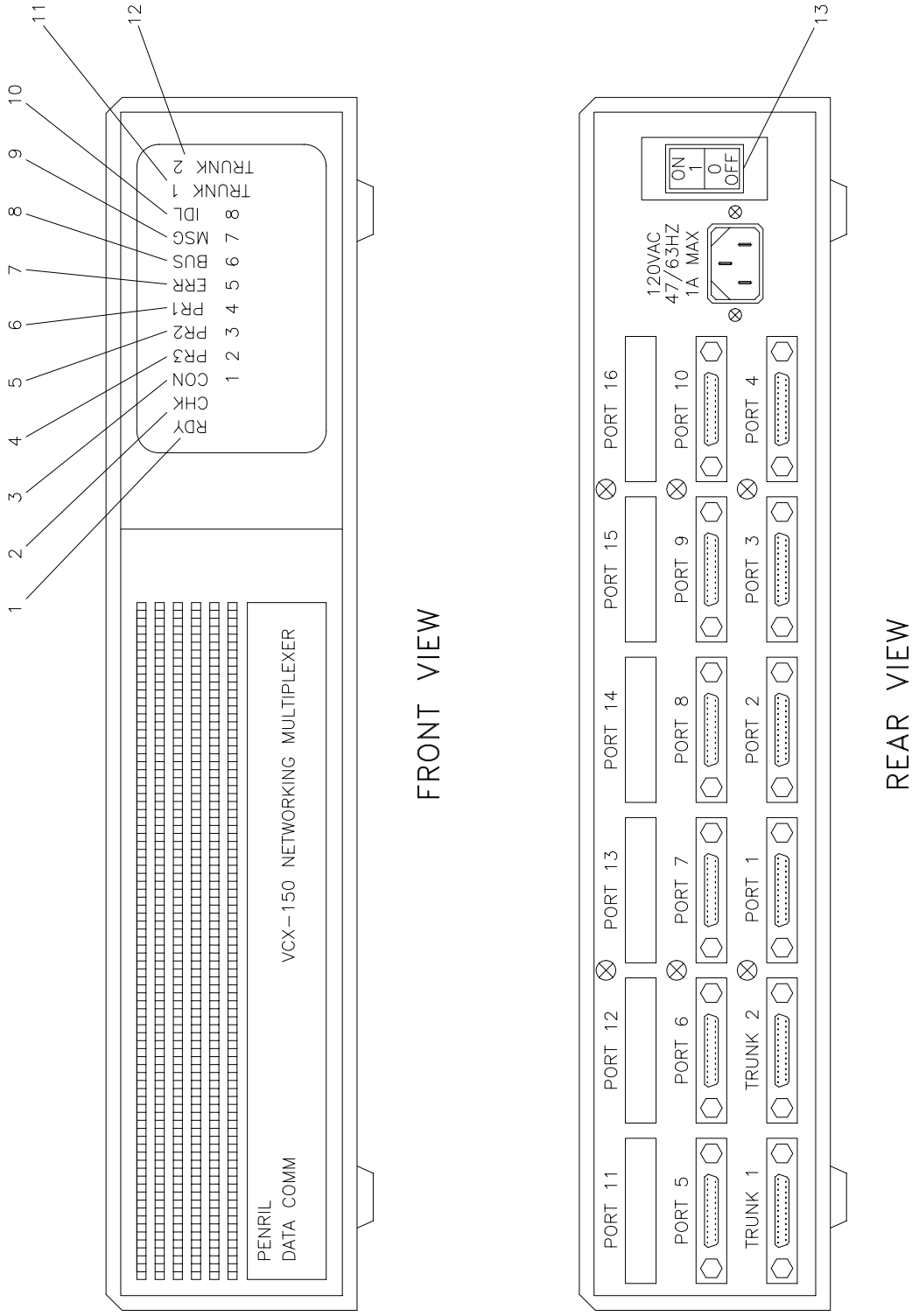

NX1605

Figure 4–12. STATMUX (Penril VCX–150) UD32A3

Table 4–5. STATMUX (Penril VCX–150) UD32A3 Controls and Indicators

Figure 4–12 Index No.	Control/Indicator Nomenclature (Type)	Function	Normal Position/ State
1	RDY (Ready) Light Emitting Diode (LED) (color green)	Power on indicator	ON
2	CHK (Check LED (color green)	Indicates when a STATMUX hardware failure occurs	OFF
3	LED 1 – CON (Connection) LED (color green)	Indicates a connection is active in the STATMUX	ON
4	LED 2 – PR3 (Priority 3) LED (color green)	Indicates a priority level 3 task is active in the STATMUX	Flickering
5	LED 3 – PR2 (Priority 2) LED (color green)	Indicates a priority level 2 task is active in the STATMUX	Flickering
6	LED 4 – PR1 (Priority 1) LED (color green)	Indicates a priority level 1 task is active in the STATMUX	OFF
7	ERR (Error) LED (color green)	Indicates a system bus error occurs	OFF
8	LED 6 – Bus LED (color green)	Indicates system bus input/output	OFF
9	LED 7 – MSG (Message) LED (color green)	Indicates message activity	Flickering
10	LED 8 – IDL (Idle) LED (color green)	Indicates a task is idle	ON
11	TRUNK 1 LED (color red)	Indicates trunk number 1 is not operational	OFF
12	TRUNK 2 LED (color red)	Indicates the trunk is not operational	OFF
13	Power Switch	Powers On/Off (1/0) the STATMUX.	ON (1)

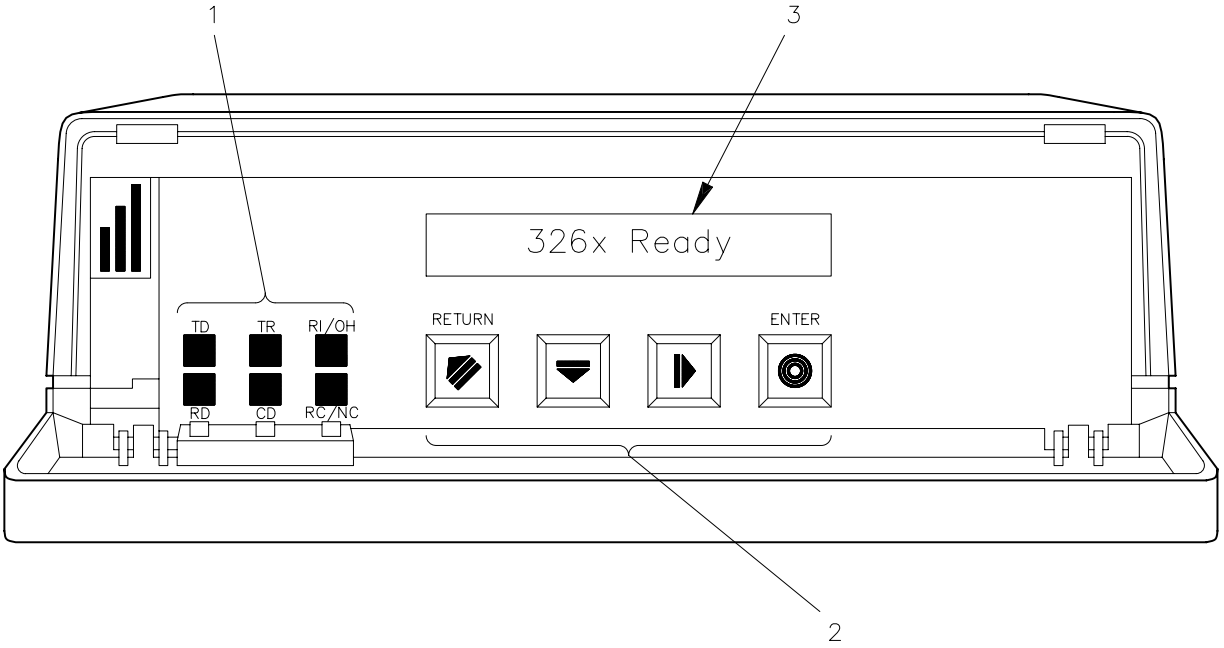

FRONT VIEW

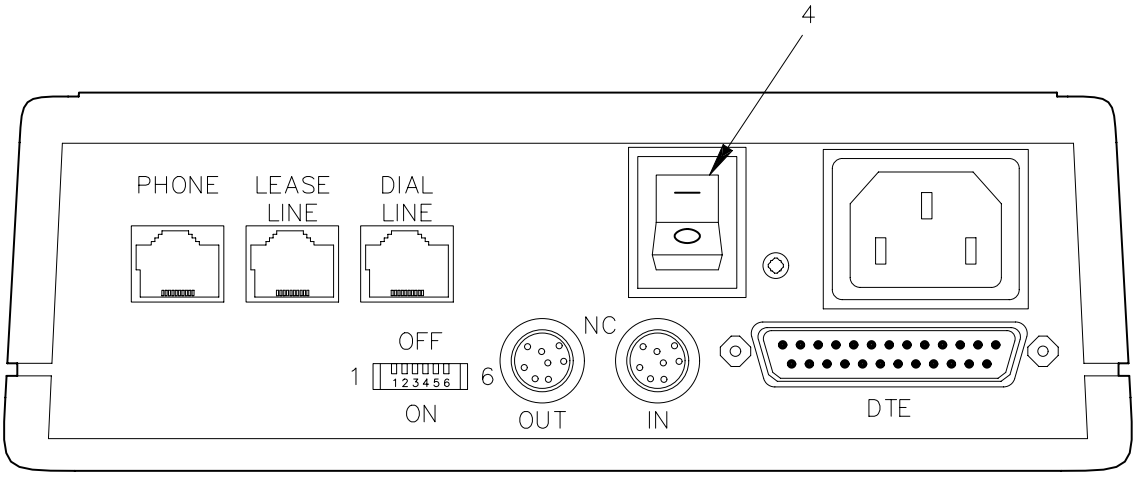

REAR VIEW

NX1606

Figure 4–13. Dial–port Modem (Codex 326x) UD32A4 (Stand–Alone)

Table 4–6. Dial–port Modem (Codex 326x) UD32A4 (Stand–Alone) Controls and Indicators

Figure 4–13 Index No.	Control/Indicator Nomenclature (Type)	Function	Normal Position/ State
1	TD (indicator)	Blinks when the modem accepts data to be transmitted from the local terminal.	N/A
	RD (indicator)	Blinks when the modem passes received data to the local terminal.	N/A
	RI/OH (indicator)	Illuminates when an incoming call is ringing. Also illuminates when the modem is off–hook and connected to the dial line.	N/A
	CD (indicator)	Carrier Detect (CD) illuminates when the local modem is receiving a carrier signal (as defined by the modulation mode currently being used) from the remote modem or when the front panel Data Carrier Detect (DCD) option is set to High.	N/A
	TR (indicator)	Illuminates when a DTR signal from an attached terminal is detected.	N/A
	RC/NC (indicator)	Blinks to indicate that the modem is under remote configuration, via front panel or AT Auto Call Unit (ACU).	N/A
2	(RETURN)	Used with setting up the modem configuration and to view settings. See Section 6.6, paragraph 6.6.3.	N/A
	(ACROSS)	Used with setting up the modem configuration and to view settings. See Section 6.6, paragraph 6.6.3.	N/A
	(DOWN)	Used with setting up the modem configuration and to view settings. See Section 6.6, paragraph 6.6.3.	N/A
	(ENTER)	Used with setting up the modem configuration and to view settings. See Section 6.6, paragraph 6.6.3.	N/A
3	LED Display	Indicates modem is Ready.	N/A
4	Power Switch	Applies power to the modem when in “1” position.	ON (1)

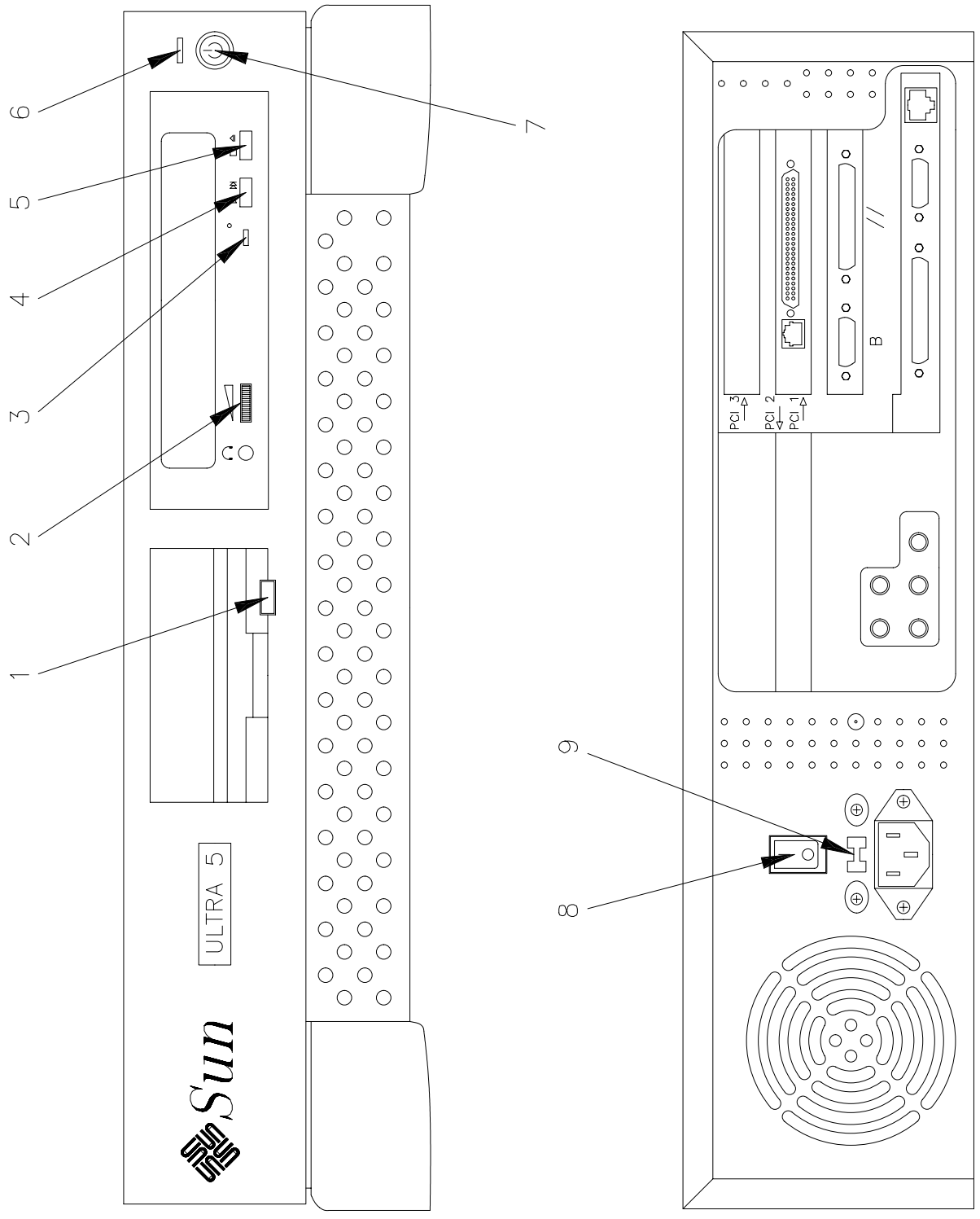

Figure 4–14. BDDS Processor (Sun Ultra 5) UD70A1

Table 4−7. BDDS Processor (Sun Ultra 5) UD70A1 Controls and Indicators

Figure 4−14 Index No.	Control/Indicator Nomenclature (Type)	Function	Normal Position/ State
1	Eject Button for 3.5−inch floppy	Ejects the 3.5−inch floppy from the drive.	N/A
2	Volume Control for CD−ROM	Controls the volume for the CD−ROM through the headphones.	N/A
3	Access Light for CD−ROM	Blinking − the CD−ROM is being accessed.	Variable
4	Play /Skip−Track Button	Starts the playing of the CD−ROM or causes the CD−ROM to skip to the next track if already playing.	N/A
5	Stop /Eject Button	Stops the CD−ROM play or if already stopped causes the CD−ROM to eject.	N/A
6	Power LED	On − power is supplied to the Processor.	ON
7	Standby Button	If UNIX is running, the Standby button displays a menu option, with options to suspend, shutdown, or cancel. The Processor needs to be placed in standby before powering off. If at the CDE Login screen, depressing the Standby button, will place the processor at the `ok` prompt.	N/A
8	Power Switch	Applies power to the Processor.	ON (1)
9	Voltage Line Selector Switch	Selects voltage either 115V or 230V.	115V

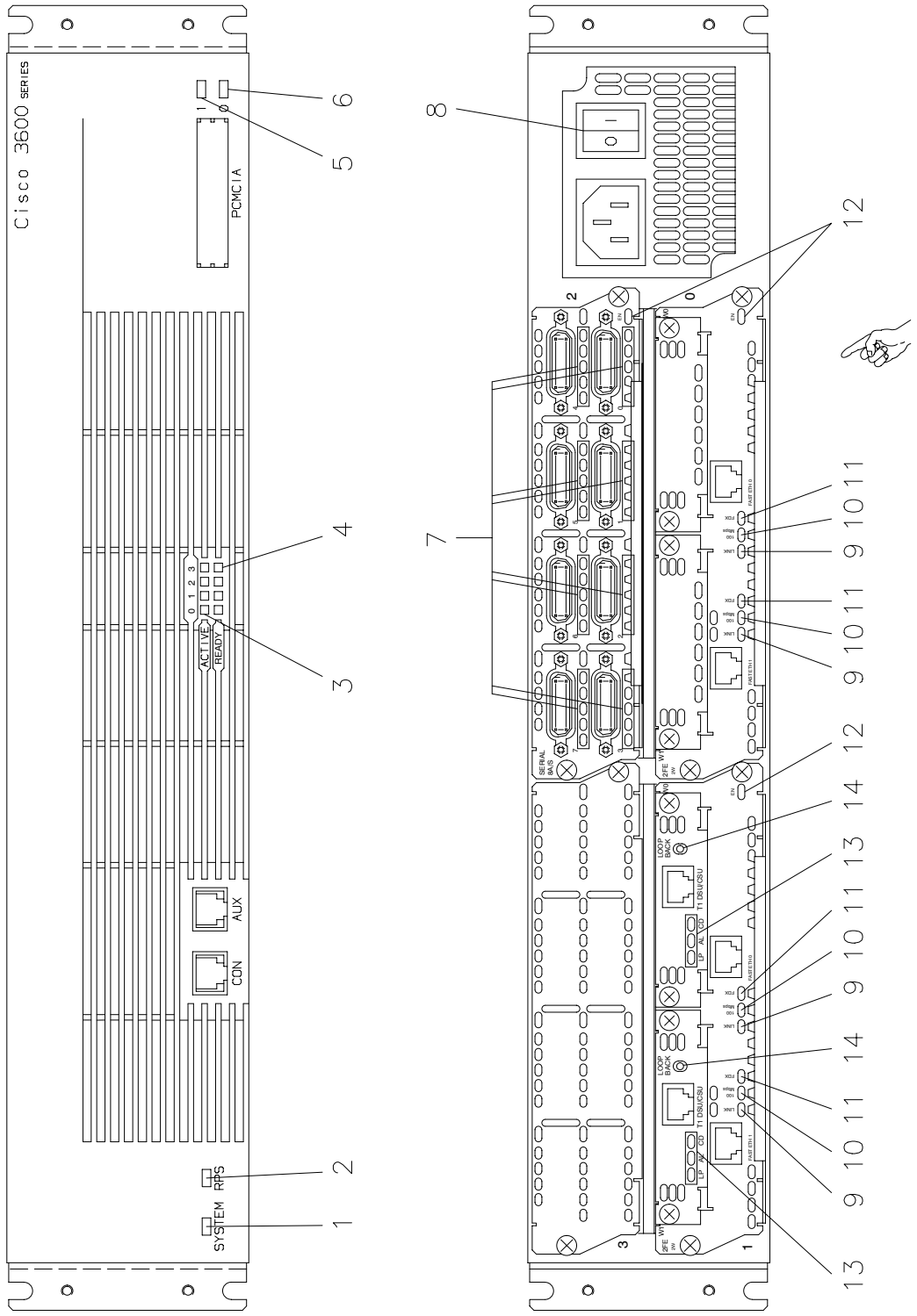

NX1608

Figure 4–15. Router (Cisco 3640) UD70A2 (Individual site configuration may differ.)

Table 4–8. Router (Cisco 3640) UD70A2 Controls and Indicators

Figure 4–15 Index No.	Control/Indicator Nomenclature (Type)	Function	Normal Position/ State
1	System LED	Indicates power situation. Off: Not receiving power. Blinking (green) – powering ROM monitor. No errors detected. On (green) – operating normally. No errors detected. On (amber) – receiving power, but errors detected. Alternating (amber and green) – power–on self–test.	Solid green
2	Redundant Power Source (RPS) LED	Not used.	N/A
3	Network Module Activity LEDs	Blinking – indicates network activity on the specified module Off – no network activity is detected on specified module	Blinking green
4	Network Module Ready LEDs	On – functional module has been installed in the indicated slot. Off – slot is empty or the module is not functional.	Dependent on site configuration
5	PCMCIA 1 LED	Not used.	N/A
6	PCMCIA 0 LED	Not used.	N/A
7	A/S Serial Module LEDs	Indicates Serial Module Activity.	
		CN/LP:On (green) – connected On (yellow) – loopback	CN/LP: Green
		RXC: Receive Clock	RXC: Blinking
		RXD: Receive Activity	RXD: Blinking
		TXC: Transmit Clock	TXC: Blinking
		TXD: Transmit Activity	TXD: Blinking
8	Power Switch	Powers On/Off (1/0) the Router.	On (1)

Table 4–8. Router (Cisco 3640) UD70A2 Controls and Indicators – Continued

Figure 4–15 Index No.	Control/Indicator Nomenclature (Type)	Function	Normal Position/ State
9	Ethernet Link LED	Blinking – Indicates normal Ethernet link	Blinking green
10	Ethernet 100Mbps LED	Blinking – Indicates the speed of the interface is 100Mbps	Blinking green
11	Ethernet FDX LED	Indicates the interface is in full–duplex mode	Off
12	Enable LED	Indicates entire module has passed a self–test.	On green
13	CSU/DSU LEDs	Indicates CSU/DSU Connection Status.	
		LP LED Off – Normal operation Yellow – line or loopback state detected	LP: Off
		AL (Alarm) LED Off – Normal condition Red – No receive signal Yellow – Remote station has alarm condition Blue – Remote station is probably out of service	AL: Off
		CD (Carrier Detect) LED Green – Normal operation	CD: On
14	Loopback Button	Depress to place into loopback mode, depress again to turn loopback off.	N/A

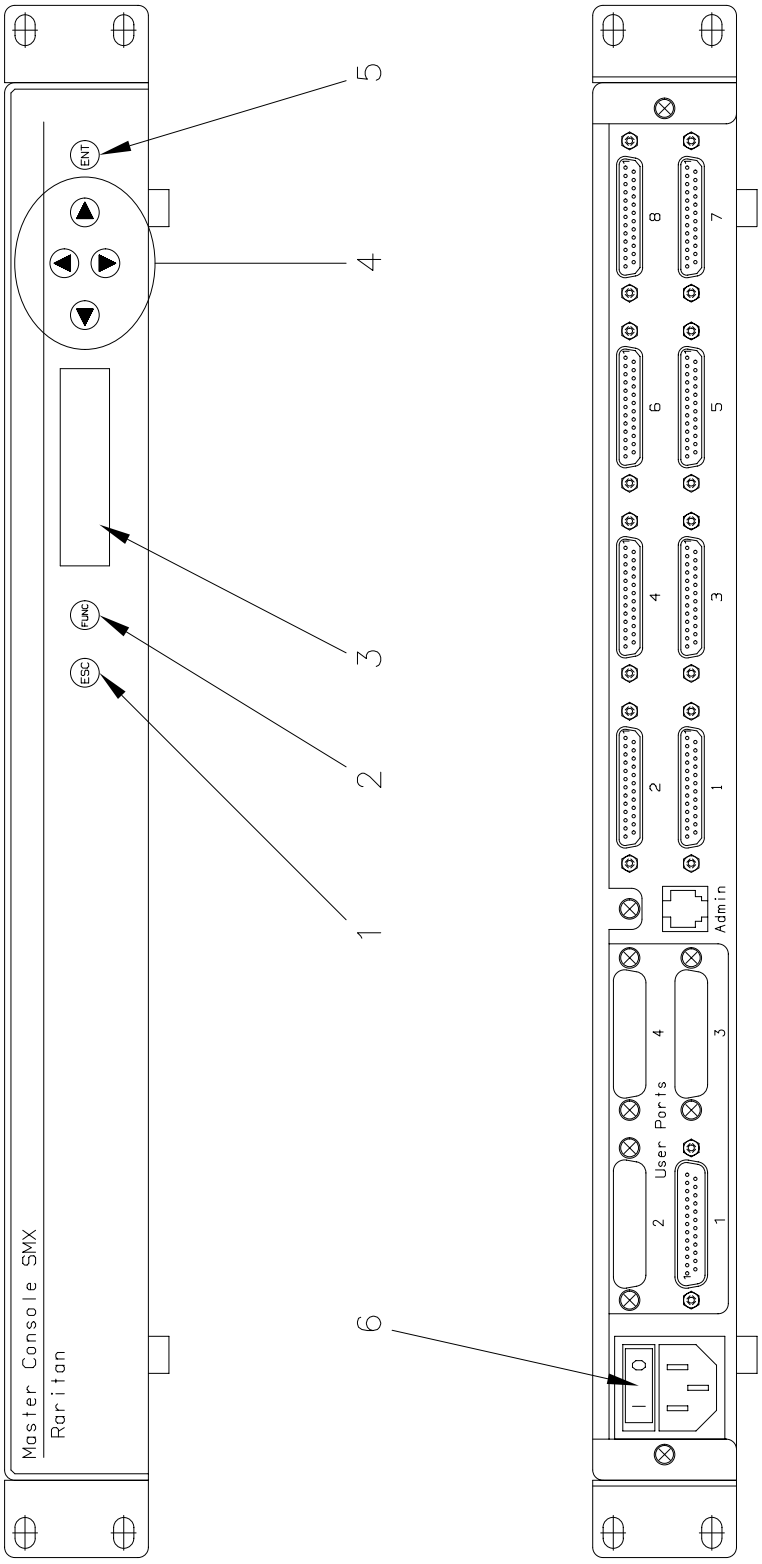

Figure 4–16. KVM Switch (Raritan SMX18) UD70A3

Table 4–9. KVM Switch (Raritan SMX18) UD70A3 Controls and Indicators

Figure 4–16 Index No.	Control/Indicator Nomenclature (Type)	Function	Normal Position/ State
1	ESC Button	Not used*.	N/A
2	FUNC Button	Not used*.	N/A
3	Liquid Crystal Display (LCD)	Indicates the status of the KVM Switch*.	Current channel is normally displayed.
4	Directional Arrows (4) ▲ ▼ ◀ ▶	Not used*.	N/A
5	ENT	Not used*.	N/A
6	Power Switch	Power the KVM Switch on and off (1/0).	ON (1)

– – – – –

* The controls located on the Raritan KVM Switch are normally not utilized. All functions can be utilized from the Sun Keyboard. See paragraph 6.6.6.

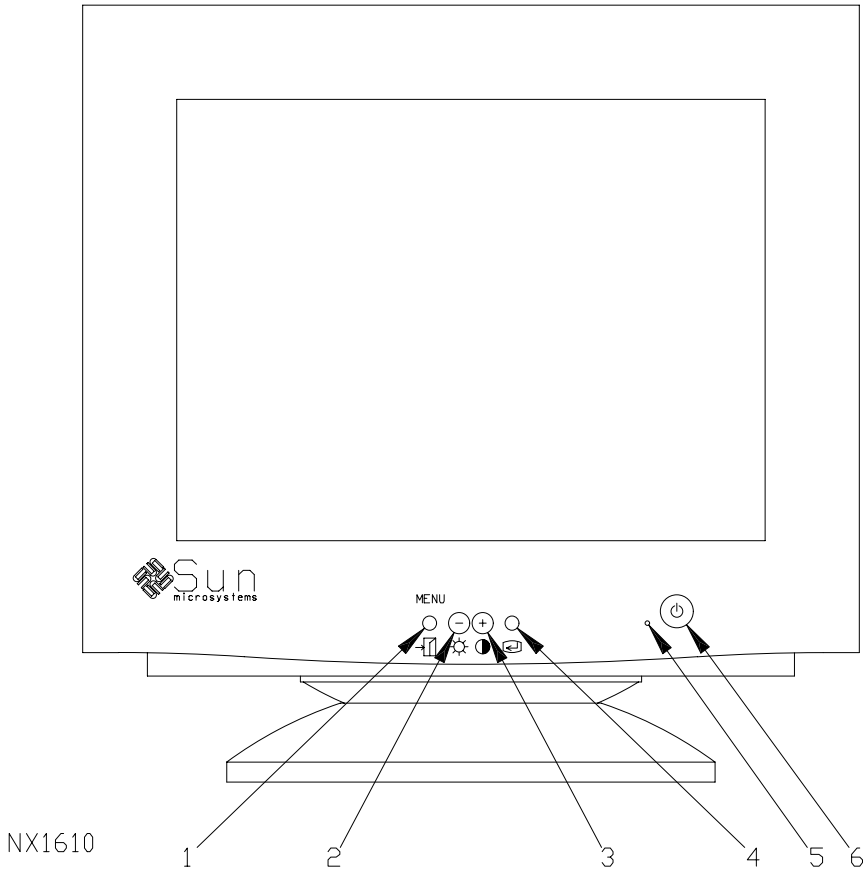

Figure 4–17. 17–Inch Monitor (Sun) UD70A4

Table 4–10. 17–Inch Monitor (Sun) UD70A4 Controls and Indicators

Figure 4–17 Index No.	Control/Indicator Nomenclature (Type)	Function	Normal Position/ State
1	Menu Button	Opens the on–screen menu	N/A
2	Brightness Button	Adjusts the brightness of the screen image.	N/A
3	Contrast Button	Adjusts contrast of the screen image.	N/A
4	Return Button	Returns the on–screen menu to previous menu	N/A
5	Power Indicator LED	On or blinking (green) – the monitor is turned on. On or blinking (green or orange) – the monitor is in power saving mode.	Variable
6	Power Switch	Turns the power to the monitor on or off.	ON

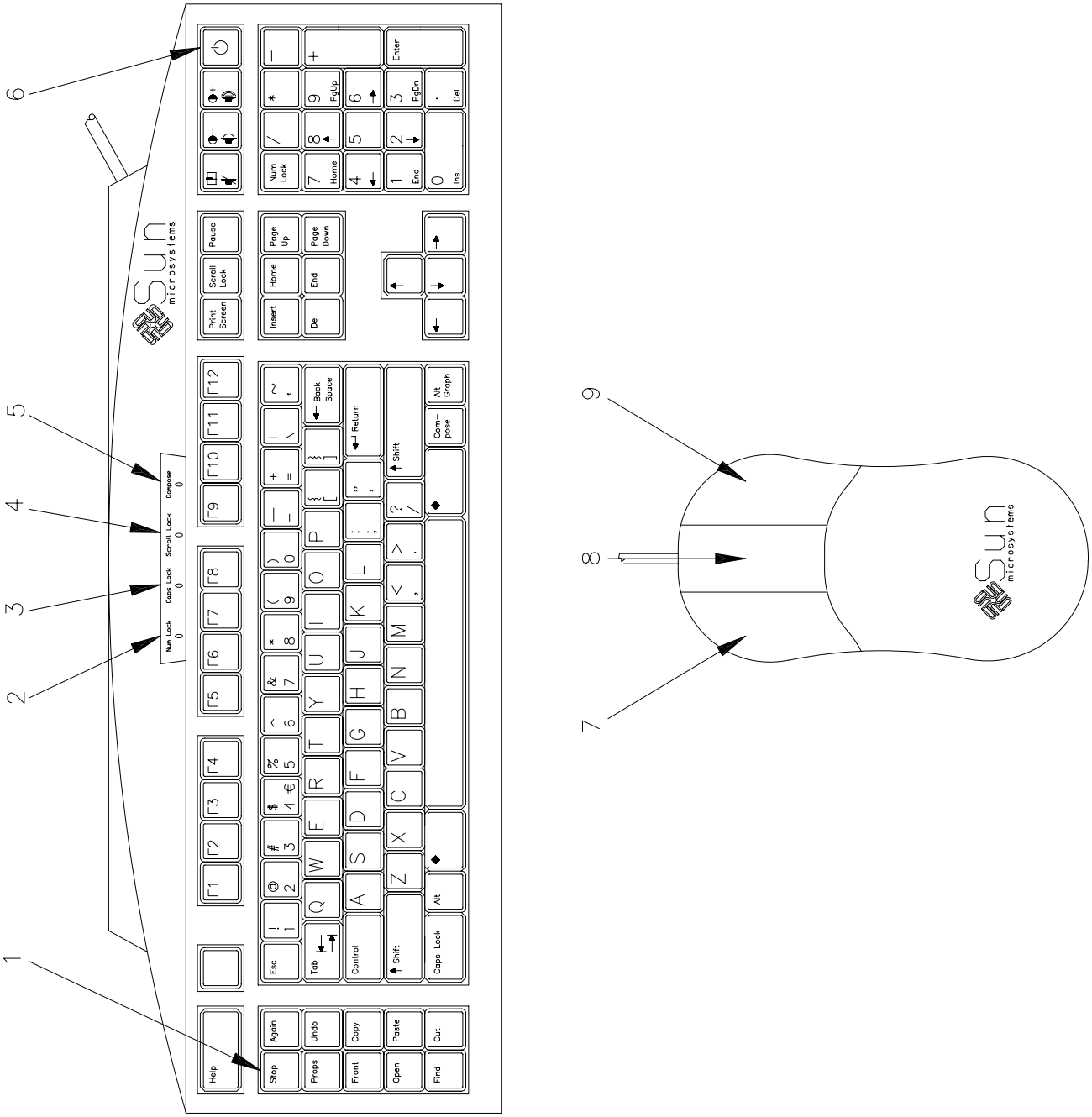

Figure 4–18. Keyboard and Mouse (Sun) UD70A5/UD70A6 and UD71A3/UD71A4

Table 4–11. Keyboard and Mouse (Sun) UD70A5/UD70A6 and UD71A3/UD71A4 Controls and Indicators
Only unique keys are discussed here.

Figure 4–18 Index No.	Control/Indicator Nomenclature (Type)	Function	Normal Position/ State
1	Stop Key	Special key used simultaneously with other keys.	N/A
2	Num Lock LED	On – numeric keypad is enabled.	OFF
3	Cap Lock LED	On – letters have been locked to print in upper case.	OFF
4	Scroll Lock LED	Not used.	N/A
5	Compose LED	Not used.	N/A
6	Power Key	Disabled with Build 2.0 update.	N/A
7	Left Mouse Button	Most common uses include marking text, selecting items and icons, and placing cursor.	N/A
8	Middle Mouse Button	Most common use is to paste marked text.	N/A
9	Right Mouse Button	Most common use is to bring up menus for a window or the CDE depending on mouse placement.	N/A

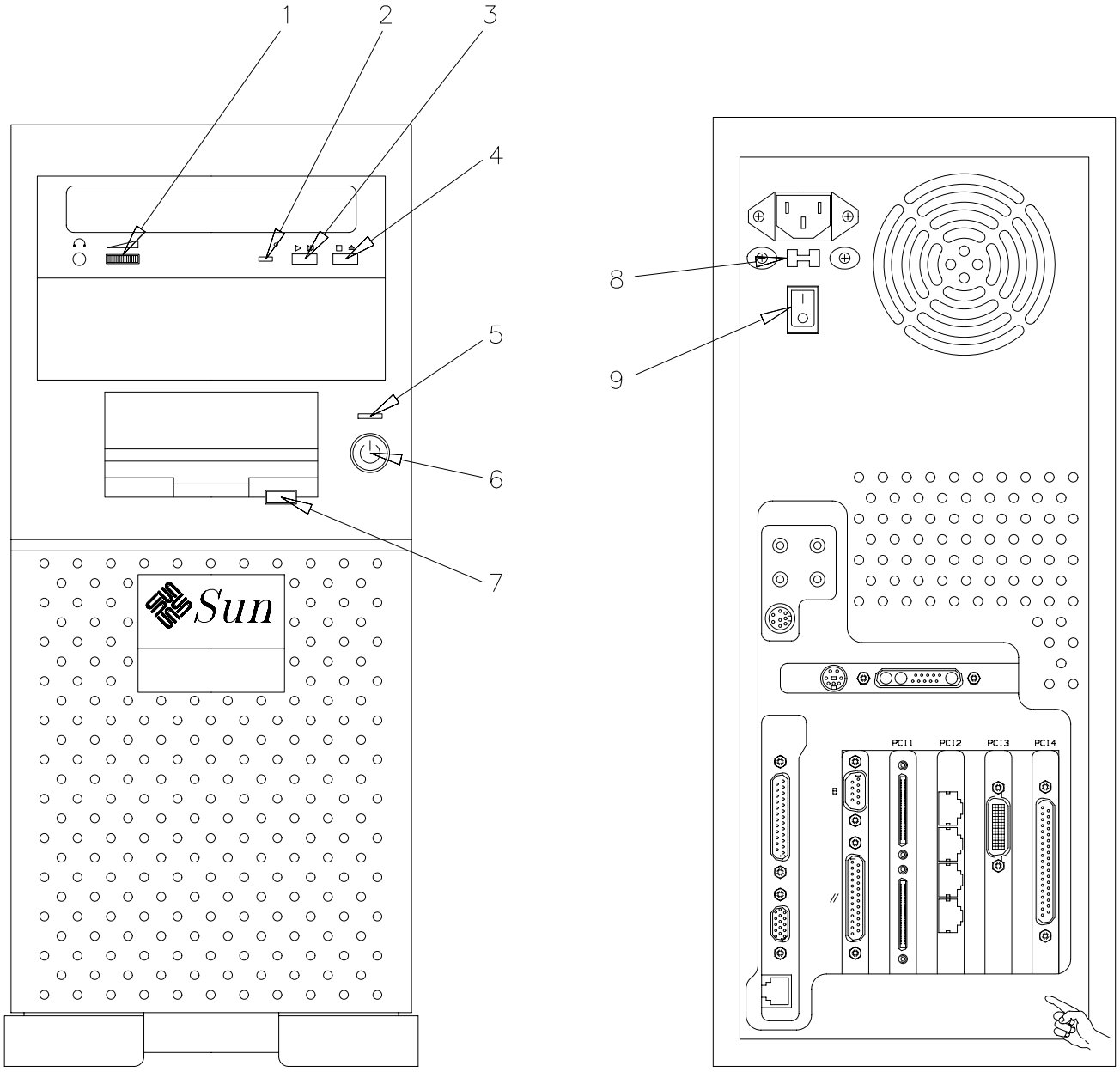

Figure 4–19. RPG Processor (Sun Ultra 10) UD70A7

Table 4−12. RPG Processor (Sun Ultra 10) UD70A7 Controls and Indicators

Figure 4−19 Index No.	Control/Indicator Nomenclature (Type)	Function	Normal Position/ State
1	Volume Control for CD−ROM	Controls the volume for the CD−ROM through the headphones.	N/A
2	Access Light for CD−ROM	Blinking − the CD−ROM is being accessed.	Variable
3	Play /Skip−Track Button	Starts the playing of the CD−ROM or causes the CD−ROM to skip to the next track if already playing.	N/A
4	Stop /Eject Button	Stops the CD−ROM play, or if already stopped, causes the CD−ROM to eject.	N/A
5	Power LED	On − power is supplied to the Processor.	ON
6	Standby Button	If UNIX is running, the Standby button displays a menu option, with options to suspend, shutdown, or cancel. The Processor needs to be placed in standby before powering off. If at the CDE Login screen, depressing the Standby button, will place the processor at the `ok` prompt.	N/A
7	Eject Button for 3.5−inch floppy	Ejects the 3.5−inch floppy from the drive.	N/A
8	Voltage Line Selector Switch	Selects voltage either 115V or 230V.	115V
9	Power Switch	Turns power on and off (1/0) to the Processor.	ON (1)

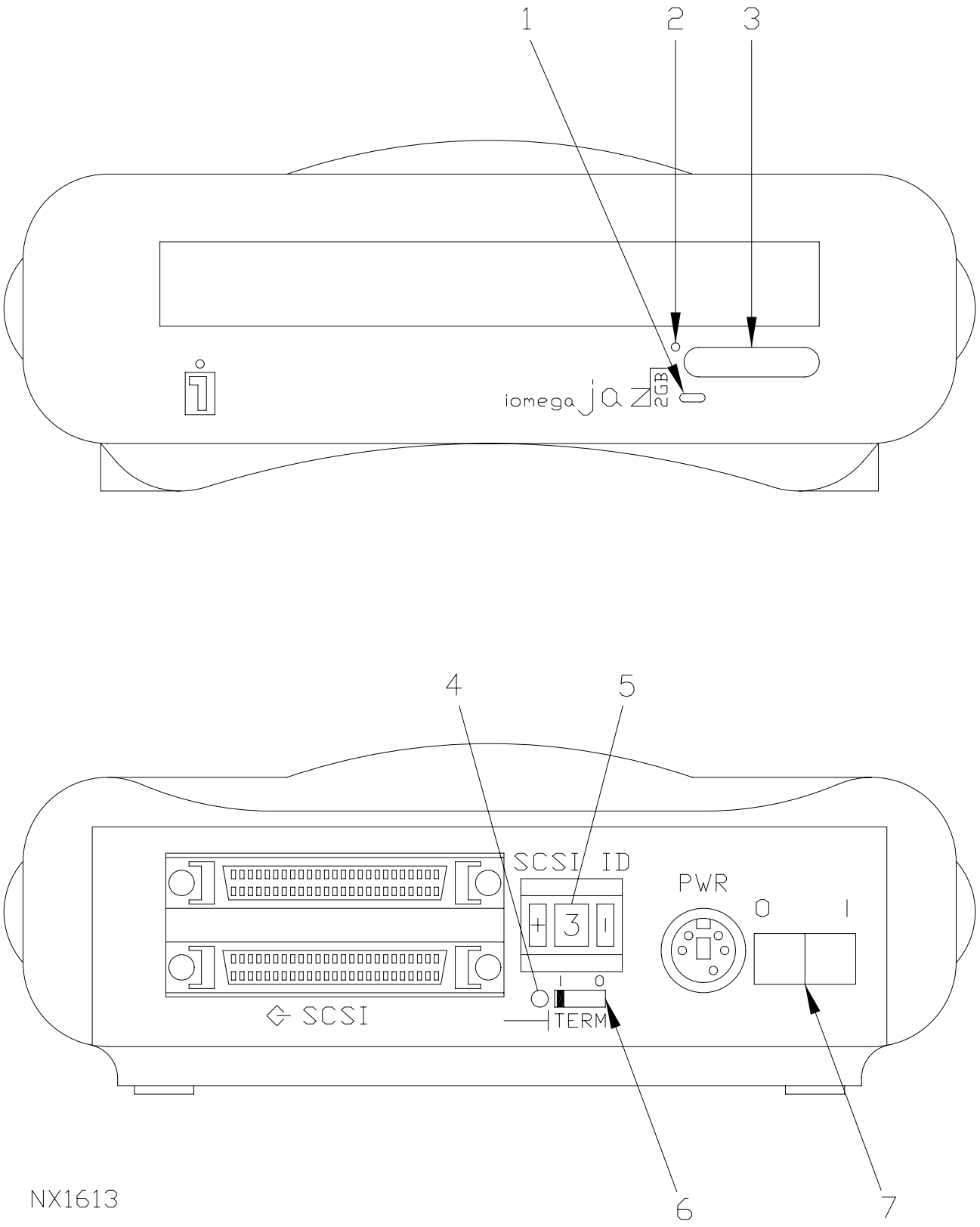

Figure 4–20. Archive Storage Device (Iomega Jaz) UD70A8 and UD70A9 (Optional)

Table 4–13. Archive Storage Device (Iomega Jaz) UD70A8 and UD70A9 (Optional) Controls and Indicators

Figure 4–20 Index No.	Control/Indicator Nomenclature (Type)	Function	Normal Position/ State
1	Disk Access LED	On or flashing – indicates the drive is accessing the Jaz disk.	Variable
2	Emergency eject (inset) button	Used to eject the disk when the disk eject button is not working. Turn power OFF before inserting the end of a paperclip into inset.	N/A
3	Disk Eject Button	Ejects an inserted disk from the drive.	N/A
4	Termination LED	On: the drive has termination turned on.	On
5	SCSI ID Switch	The + and | buttons are used to set the SCSI ID for the drive. Values range from 0 to 7.	3
6	SCSI Termination Switch	Used to set the termination for the drive. Values are 1 (On) and 0 (Off).	1
7	Power Switch	Turns the drive On and Off (1/0).	ON (1)

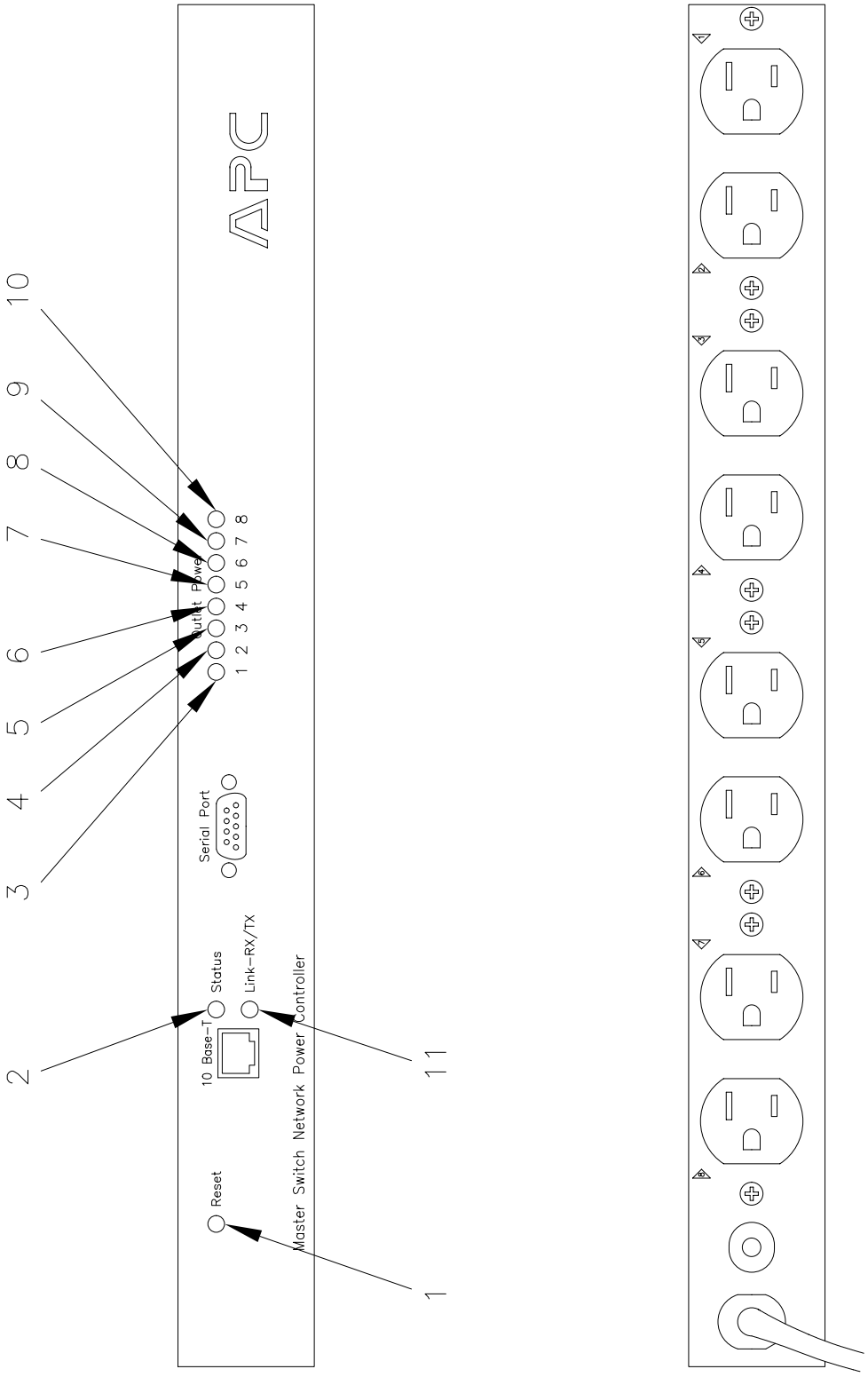

NX1614

Figure 4–21. Power Administrator (APC MasterSwitch) UD70A10

Table 4–14. Power Administrator (APC MasterSwitch) UD70A10 Controls and Indicators

Figure 4–21 Index No.	Control/Indicator Nomenclature (Type)	Function	Normal Position/ State
1	Reset Button	Reinitialize the MasterSwitch without affecting its outlet power (warm reboot)	N/A
2	LED for Link Monitor	Blinking – indicates connection to a working network connection.	Blinking Green
3	LED for receptacle # 1	On – indicates power on to receptacle # 1	On Green
4	LED for receptacle # 2	On – indicates power on to receptacle # 2	On Green
5	LED for receptacle # 3	On – indicates power on to receptacle # 3	On Green
6	LED for receptacle # 4	On – indicates power on to receptacle # 4	On Green
7	LED for receptacle # 5	On – indicates power on to receptacle # 5	On Green
8	LED for receptacle # 6	On – indicates power on to receptacle # 6	On Green
9	LED for receptacle # 7	On – indicates power on to receptacle # 7	On Green
10	LED for receptacle # 8	On – indicates power on to receptacle # 8	On Green
11	LED for Status RX/TX	On – indicates data present on network connection.	On green

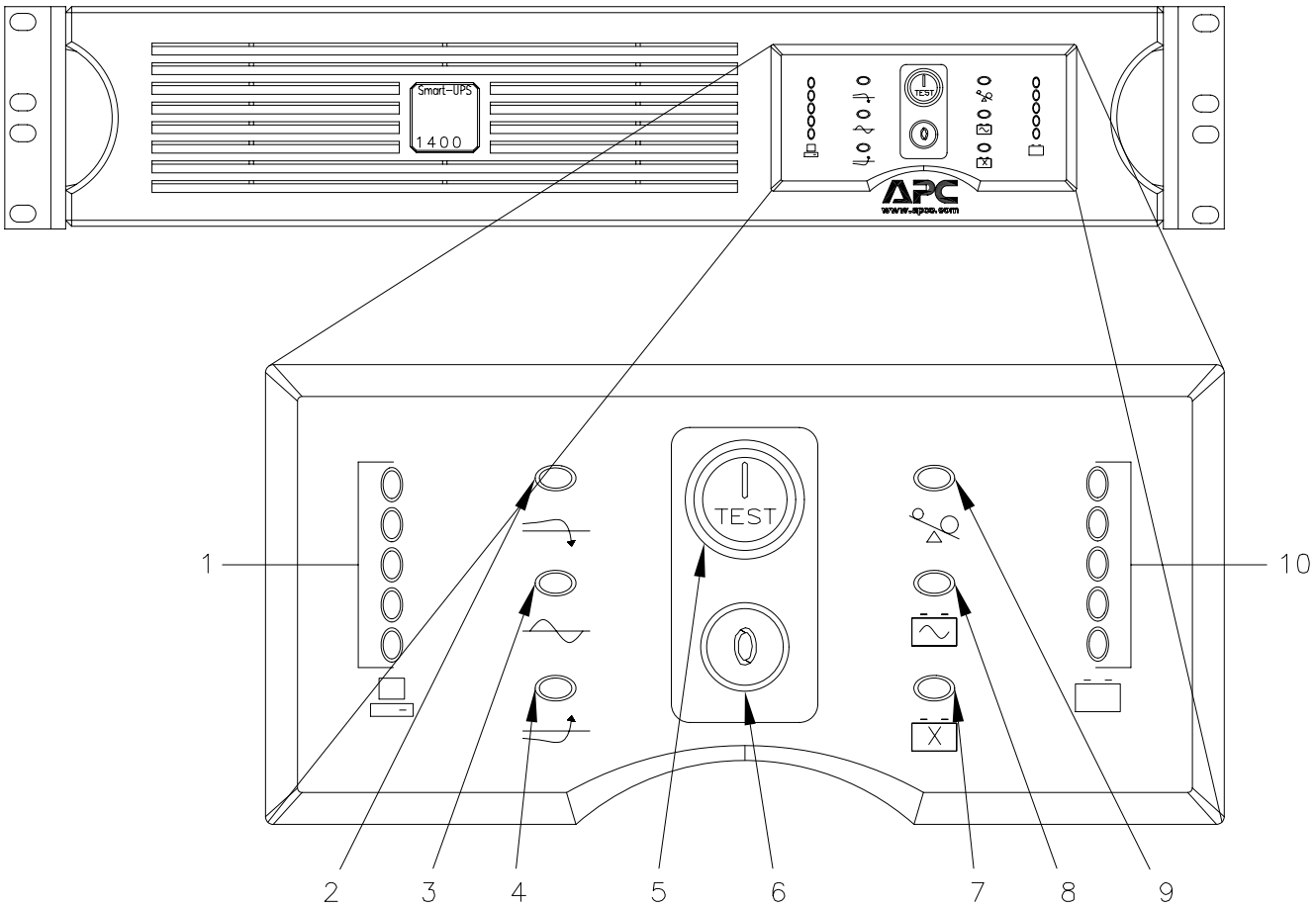

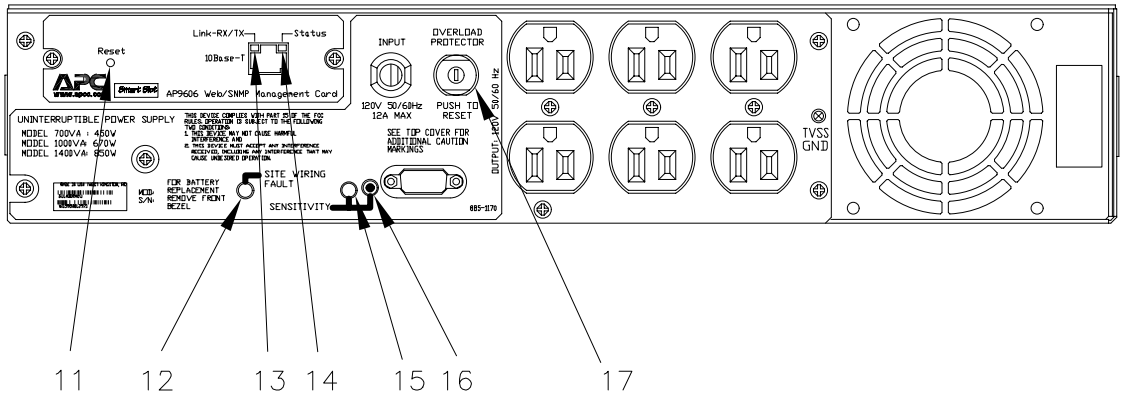

NX1615

Figure 4–22. UPS (APC SmartUPS) UD70A11

Table 4–15. UPS (APC SmartUPS) UD70A11 Controls and Indicators

Figure 4–22 Index No.	Control/Indicator Nomenclature (Type)	Function	Normal Position/ State
1	Load Bar LEDs	Indicates the power draw of the load.	Variable
2	High Voltage Compensation LED	On – The UPS is compensating for a high voltage.	Off
3	Utility Power LED	On – The UPS is supplying utility power to the loads.	On
4	Low Voltage Compensation LED	On – The UPS is compensating for a low voltage.	Off
5	On/ Test Button	Powers On the UPS and starts an UPS self–test. If the UPS already has Power On and the button is depressed and held until the Utility Power LED (#3) starts blinking, a self is initiated.	N/A
6	Power Off Switch	Power off the UPS.	N/A
7	Replace Battery LED	On – UPS has failed self–test. Accompanied by 1 minute of audible short beeps, repeated every 5 hours.	Off
8	On–Battery LED	On – when on–battery operations are occurring. Accompanied by an audible tone of 4 beeps every 30 seconds.	Off
9	Overload LED	On – indicates the load exceeds the UPS capacity. Accompanied by an audible steady tone.	Off
10	Battery Charge Bar Graph LEDs	Displays the utility input voltage (used for diagnostics).	Variable
11	Reset Button	Resets LAN Card	N/A
12	Site Wiring Fault LED	On – indicates a problem with wiring external to the UPS.	Off
13	Link RX/TX LED	Blinking – to indicate link is receiving and transmitting data	Blinking
14	Status LED	On – indicates link status is normal	On
15	Sensitivity LED	Indicates the UPS sensitivity to voltage distortion. On (bright green) – setting is normal On (dim green) – setting is reduced Off – setting is low	Normal (bright green)

Table 4–15. UPS (APC SmartUPS) UD70A11 Controls and Indicators – Continued

Figure 4–22 Index No.	Control/Indicator Nomenclature (Type)	Function	Normal Position/ State
16	Sensitivity Configuration Button	Changes the setting of the voltage sensitivity	N/A
17	Overload protector/ Reset Button	Resets the UPS if an overload has occurred.	Depressed

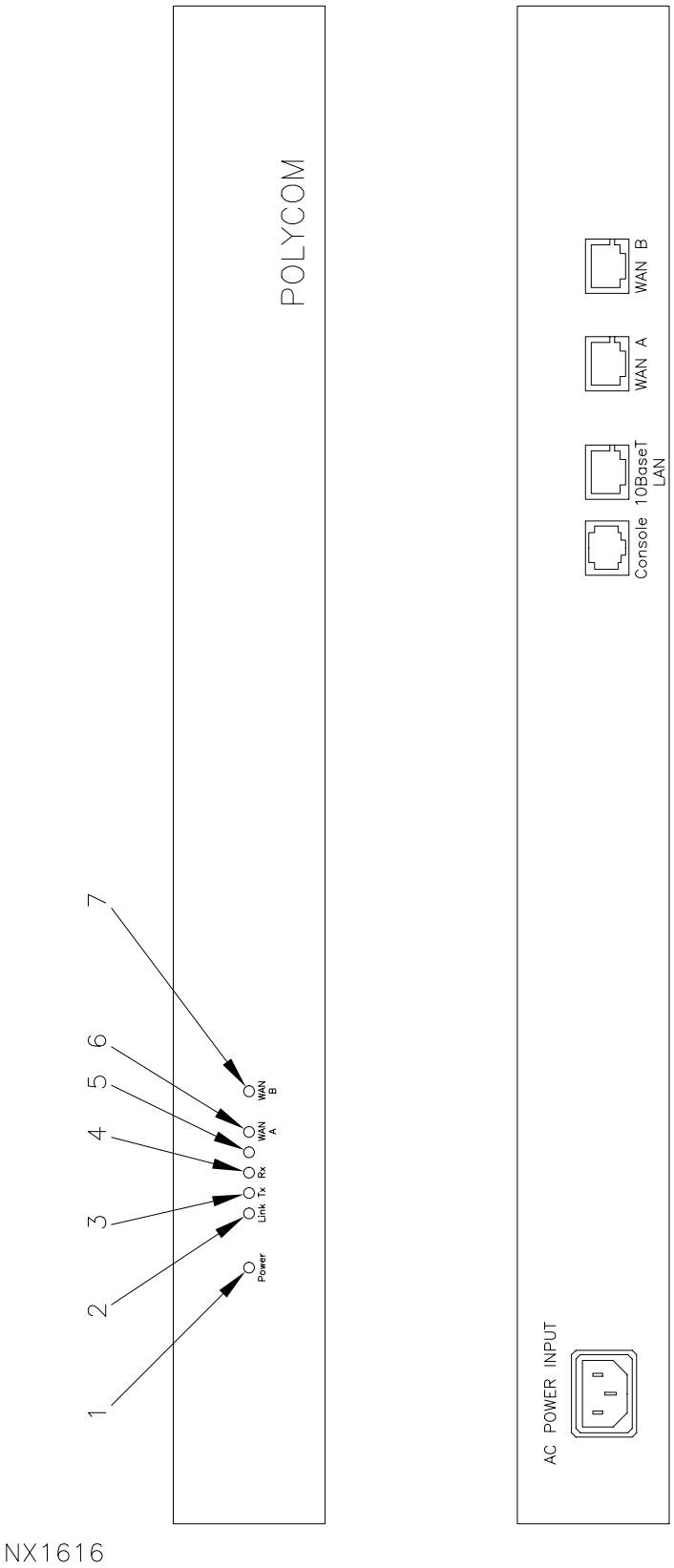

Figure 4−23. RDA/RPG Gateway (Polycom) UD70A12

Table 4–16. RDA/RPG Gateway (Polycom) UD70A12 Controls and Indicators

Figure 4–23 Index No.	Control/Indicator Nomenclature (Type)	Function	Normal Position/ State
1	Power LED	On – indicates power to the RDA/RPG Gateway	On Green
2	Link LED	On – indicates link is enabled.	On Green
3	TX LED	On – indicates transmit activity when blinking.	Blinking Amber
4	RX LED	Blinking – indicates receive activity.	Blinking Amber
5	LED	Not Use	N/A
6	WAN A LED	On – indicates network link.	Off
7	WAN B LED	On – indicates network link	On Green

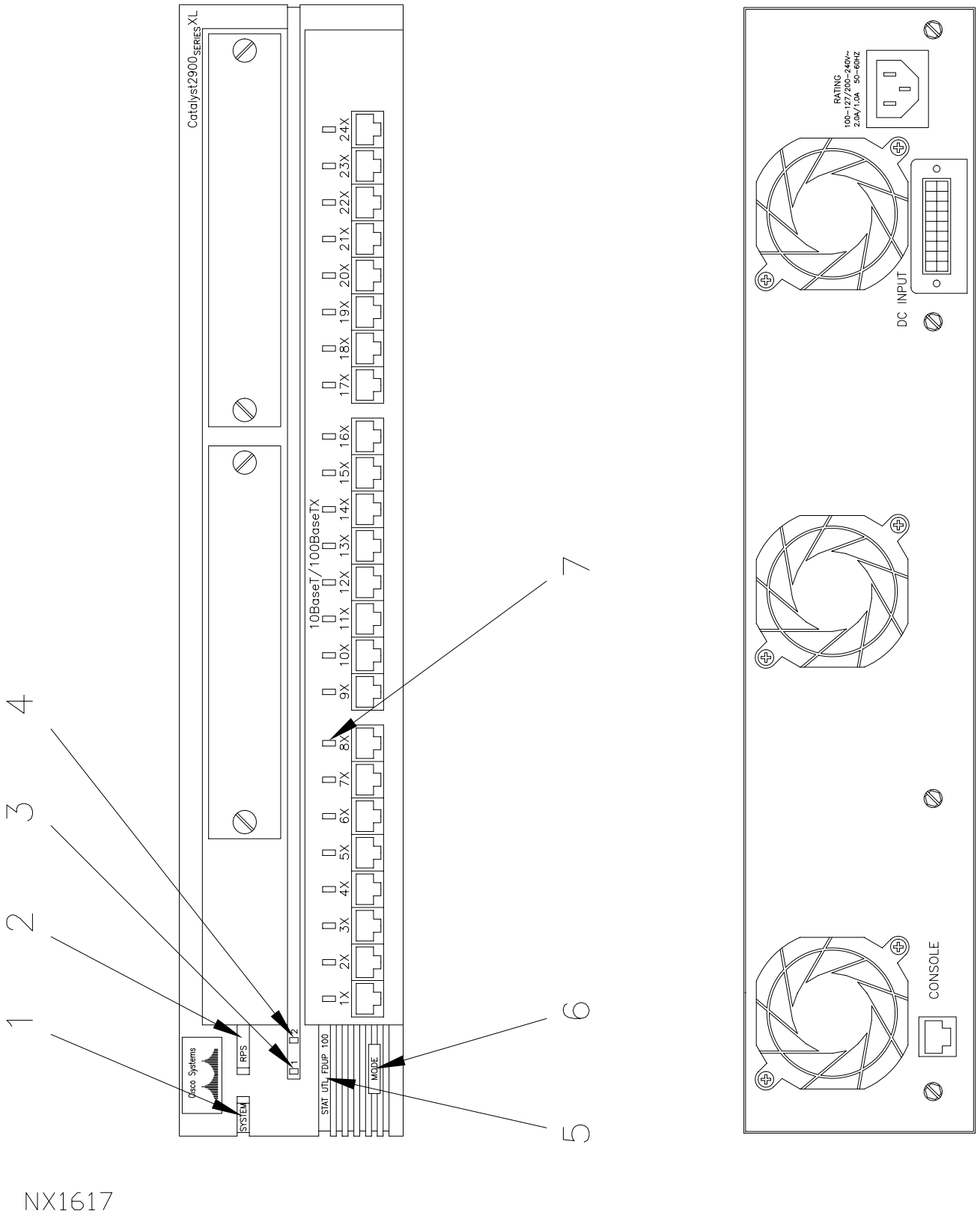

Figure 4–24. LAN Switch (Cisco 2924) UD70A13

Table 4–17. LAN Switch (Cisco 2924) UD70A13 Controls and Indicators

Figure 4–24 Index No.	Control/Indicator Nomenclature (Type)	Function	Normal Position/ State
1	System LED	Indicates whether the system is receiving power and operating properly. Off – system is not powered up. On (green) – system is operating normally. On (amber) – system is receiving power but is not operating properly.	On Green
2	Redundant Power System LED	Not used.	N/A
3 and 4	Expansion Slot Status LEDs	Not used. No expansion cards are installed.	N/A
5	Port Mode LED	Indicates which mode the user has placed the system. Four modes are possible: STAT, UTL, FDUP, 100.	STAT
6	Mode Button	Changes the port mode. The mode selected is indicated by the Port Mode LED. Four modes are possible: STAT, UTL, FDUP, 100.	N/A
7	Port Status LEDs (24 in all)	Each individual LED gives the status of the specific port. The following are the possibilities. Off – No Link. On (green) – Link Present. Blinking (green) – Activity, port is receiving or transmitting data. Blinking (green and amber) – Link Fault. On (amber) – Port is not forwarding. After a port is configured, the port status LED may stay amber up to 30 seconds, before changing to green.	Solid Green Blinking Green or Off

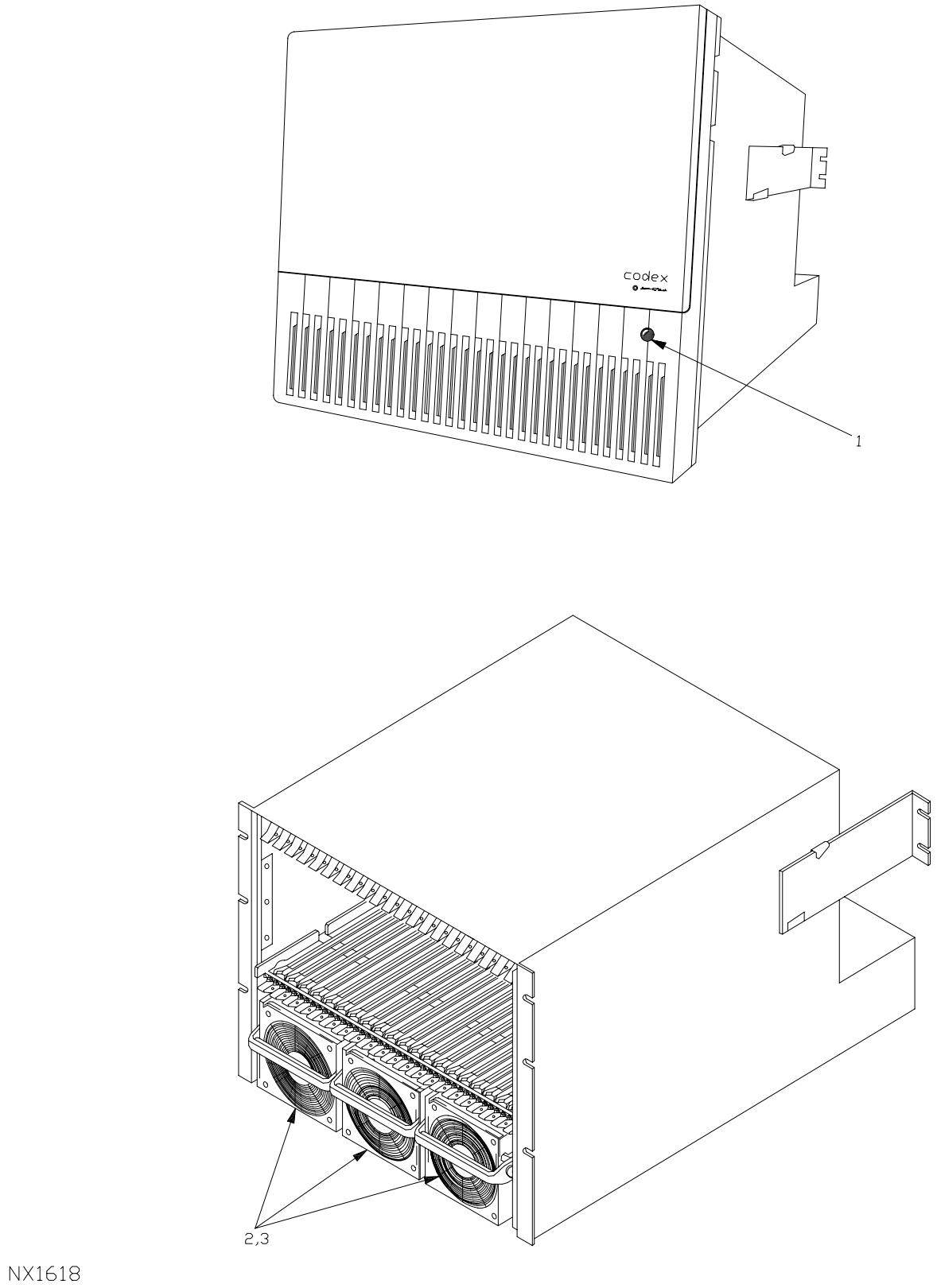

Figure 4–25. Dedicated/Dial Modem Rack Assembly (Codex 326x) UD70A14

Table 4–18. Dedicated/Dial Modem Rack Assembly (Codex 326x) UD70A14 Controls and Indicators

Figure 4–25 Index No.	Control/Indicator Nomenclature (Type)	Function	Normal Position/ State
1	Front Door Lock	Locks door; prevents unwanted tampering.	N/A
2	Power Supply Module (Right side behind fan)		
	a. Upper (Green LED)	Indicates the fan is functioning properly.	ON
	b. Lower (Green LED)	Indicates the power supply is functioning properly.	ON
3	Fan Module (Right side behind fan) Green LED	Indicates the fan is functioning properly.	ON

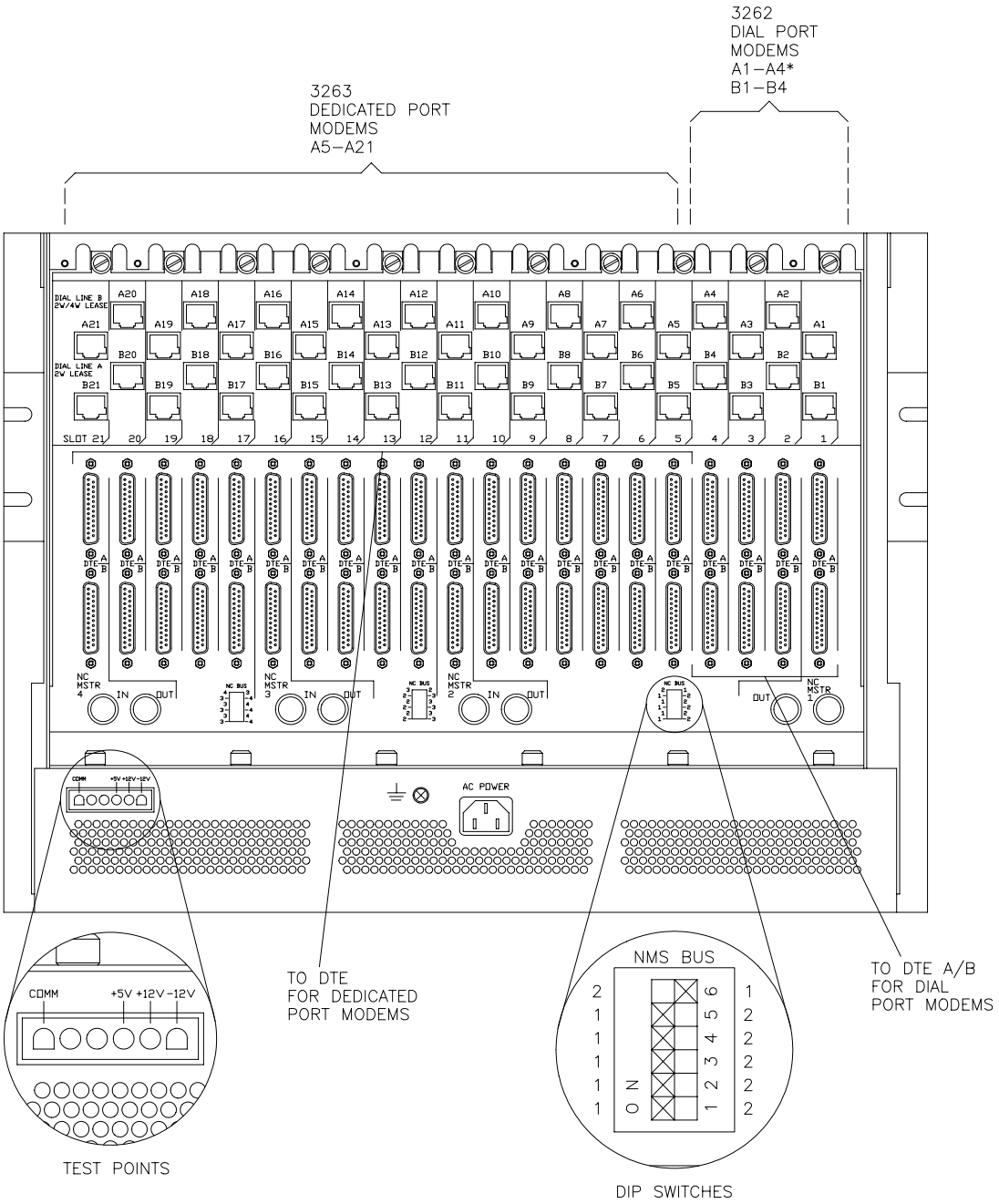

*EACH DIAL PORT MODEM (A1–A4) CARD HAS TWO DIAL PORTS, A AND B, FOR A TOTAL OF EIGHT DIAL PORTS.

NX1619

Figure 4–26. Dedicated/Dial Modem Rack (Codex 326x) UD70A14 with 21–Slot Backbone (Rear View)

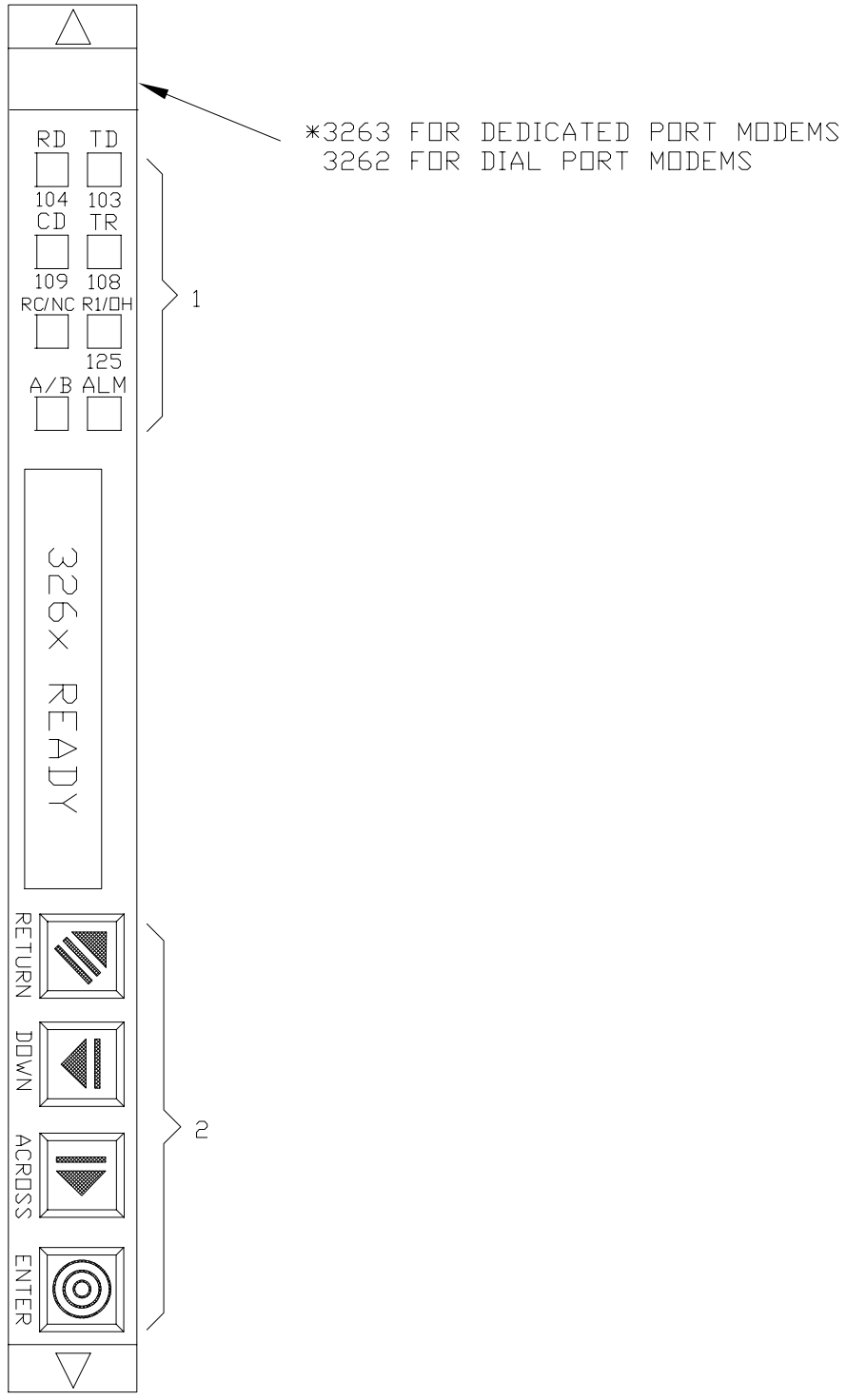

NX1620

Figure 4–27. Dial Port Modem (Codex 3262) UD70A14A1–A4 and Dedicated Port Modem (Codex 3263) UD70A14A5–A21

Table 4−19. Dial Port Modem (Codex 3262) UD70A14A1−A4 and Dedicated Port Modem (Codex 3263) UD70A14A5−A21 Controls and Indicators

Figure 4−27 Index No.	Control/Indicator Nomenclature (Type)	Function	Normal Position/ State
1	TD LED	Blinks when the modem accepts data to be transmitted from the local terminal.	N/A
	RD LED	Blinks when the modem passes received data to the local terminal.	N/A
	RI/OH LED	Illuminates when an incoming call is ringing. Also illuminates when the modem is off−hook and connected to the dial line.	N/A
	CD LED	Illuminates when the local modem is receiving a carrier signal (as defined by the modulation mode currently being used) from another modem or when the DCD is set to High, for test purposes, using the front panel controls.	N/A
	TR LED	Illuminates when a Data Terminal Ready DTR signal from an attached terminal is detected.	N/A
	RC/NC LED	Blinks to indicate that the modem is under remote configuration (via front panel or AT ACU). Illuminated when under narrowband configuration.	N/A
	A/B (A or B)	Rack−mounted dial port modem cards contain two modems. For the distinction of cables and front panel LEDs one is referred to as “A” and the other “B”. Holding RETURN and ENTER down together toggles between “A” and “B”. The A/B LED is illuminated (ON) when modem “A” front panel information is displayed. It is extinguished (OFF) when modem “B” information is displayed.	N/A
	ALM (Alarm)	Illuminated when a test is in progress as a modem failure occurs. For the dial port modems, if one modem fails, the ALM LED illuminates and remains illuminated regardless of which modem front panel is being viewed.	OFF

Table 4–19. Dial Port Modem (Codex 3262) UD70A14A1–A4 and Dedicated Port Modem (Codex 3263) UD70A14A5–A21 Controls and Indicators – Continued

Figure 4–27 Index No.	Control/Indicator Nomenclature (Type)		Function	Normal Position/ State
2		**<RETURN>**	See Section 6.6.	
		<ACROSS>	See Section 6.6.	
		<DOWN>	See Section 6.6.	
		<ENTER>	See Section 6.6.	

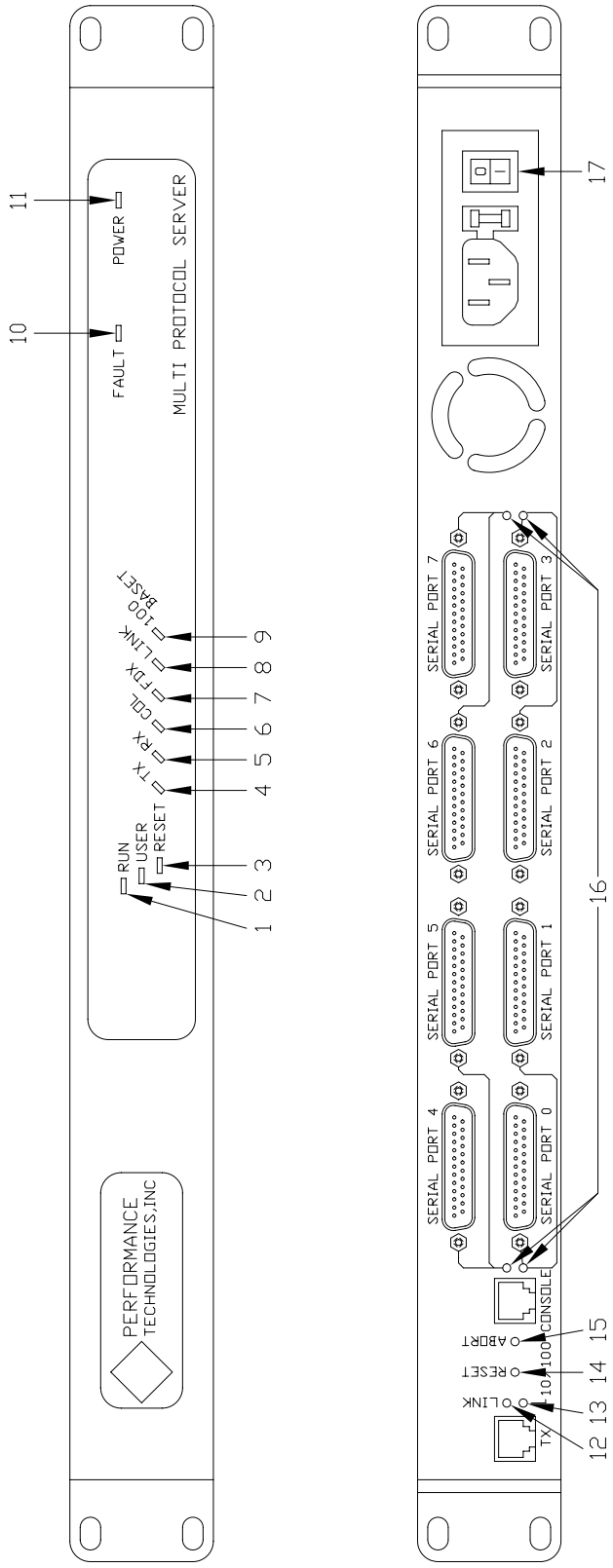

NX1621

Figure 4–28. Communication Server (PTI MPS 800) UD70A15, UD70A16, UD70A17

Table 4–20. Communication Server (PTI MPS 800) UD70A15, UD70A16, UD70A17 Controls and Indicators

Figure 4–28 Index No.	Control/Indicator Nomenclature (Type)	Function	Normal Position/ State
1	Run LED	On – indicates an application is running.	On Green
2	User LED	Definable for use by software developer	N/A
3	Reset LED	On – indicates a soft reset has occurred	Off
4	TX LED	Blinking – Transmit Activity Indicator	Blinking Green
5	RX LED	Blinking – Receive Activity Indicator	Blinking Green
6	COL LED	On – Collision Activity Indicator	Off
7	FDX LED	On – Full Duplex Mode Indicator	On Green
8, 12	Link LED	On – indicates an active link to the LAN is enabled.	On Green
9	100 Base T	Indicates established connection speed. On – indicates 100 MB LAN connection Off – indicates 10 MB LAN connection.	On Green
10	Fault LED	On –indicates a hard system failure requiring operator intervention.	Off
11	Power LED	On – indicates stabilized internal power	On
13	10/100 LED	Indicates established connection speed. On – indicates 100 Mbps LAN connection Off – LED indicates 10 Mbps connection.	On Amber
14	Reset Button	Used to issue a power–on reset, all logic boards within the Communication Server are reset to the “just powered–on” state.	N/A
15	Abort Button	Used to stop the current software process within the Communication Server.	N/A
16	Line Interface Mode LEDs, 4 places	Used to indicate type of data transmission. On=RS232 Off=RS422/EIA–530	On Green

Table 4–20. Communication Server (PTI MPS 800) UD70A15, UD70A16, UD70A17 Controls and Indicators – Continued

Figure 4–28 Index No.	Control/Indicator Nomenclature (Type)	Function	Normal Position/ State
17	Power Switch	Applies power to the Communication Server.	On (1)

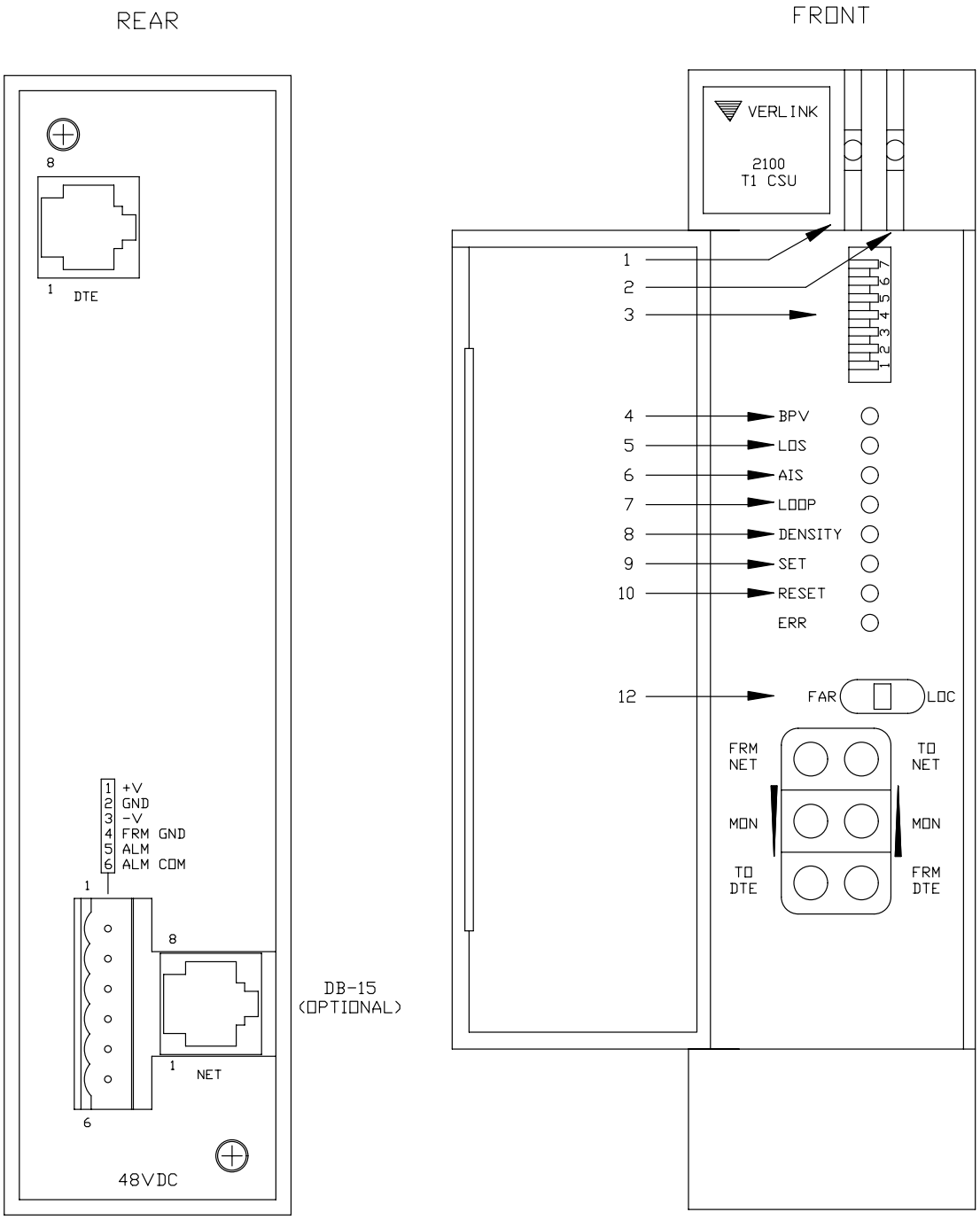

NX1784

Figure 4–29. Channel Service Unit (CSU) UD70A18

Table 4–21. CSU Controls and Indicators

Figure 4–29 Index No.	Control/Indicator Nomenclature (Type)	Function	Normal Position/ State
1	Fault LED	This red LED is on for a unit failure or line fault which exceeds thresholds.	Off
2	Power LED	This green LED is on when the unit is powered on and functioning normally.	On
3	Configuration Switch S2	S2–1 is used to apply a sealing current of 20 mA to the network interface for applications where the telco provides a dry interface (no power interface) and sealing current is needed. Left: sealing current is Off. Right: sealing current is On.	Left
		S2–2 implements ones–density insertion after the preset number of zeros has been received from the DTE and the Keep Alive mode is activated. Left: 15 zeros Right: 175 zeros	Left
		S2–3 sets the framing of the SET, RESET, and BERT test signals. Left: Framed test pattern Right Unframed test pattern	Left
		S2–4 sets the network line coding. If set to AMI, the unit indicates a BPV error for each event. The B8ZS code coming from the network sets the test signals to B8ZS. Left: B8ZS line mode Right: AMI line mode	Left (see NOTE)
		S2–5 either sets or clears the test pattern. The BERT position allows the CSU to send a BERT pattern after the set signal (LOOP) is sent. Clear passes the traffic from the DTE through the network and allows network access via test jacks to run bit error tests (affects network tests only). Left: BERT Right: Clear	Left

Table 4–21. CSU Controls and Indicators – Continued

Figure 4–29 Index No.	Control/Indicator Nomenclature (Type)	Function	Normal Position/ State
		S2–6 and S2–7. Positions S2–6 and S2–7 are used to select the action that occurs upon loss of DTE signal, when the unit switches to the Keep Alive mode on the network line. The choices are: Left/Left – Keep Alive is unframed all ones Left/Right – Keep Alive is framed all ones Right/Left or Right/Right – Keep Alive signal is the activation of the line loopback	Left/Left
4	BPV LED	This red LED lights (0.1 second minimum) for each occurrence of bipolar violations from the network.	Off
5	LOS LED	This red LED lights constantly when a loss of signal condition is detected from the network.	Off
6	AIS LED	This red alarm indication signal LED lights constantly if an unframed all–ones condition is detected from the network.	Off
7	LOOP LED	This yellow LED lights constantly when the network interface is in a line loopback.	Off
8	DENSITY LED	This red LED lights constantly if the ones density from the equipment is less than 12.5 percent or if there is a loss of signal.	Off
9	SET	This yellow LED flashes if the set code is transmitted. It lights constantly if the set code is received.	Off
10	RESET LED	This yellow LED flashes if the reset code is transmitted. It lights constantly for five seconds if the reset code is received.	Off
11	ERR LED	The ERR LED lights for 0.1 second when a bit error or sync loss is detected (typical to light once for .1 seconds after 5 seconds of Loop Codes associated with a FAR loopback test). It lights constantly for a failed FAR loopback test.	Off

Table 4−21. CSU Controls and Indicators − Continued

Figure 4−29 Index No.	Control/Indicator Nomenclature (Type)	Function	Normal Position/ State
12	Test Switch	This switch is used for local testing. When in the Far position (FAR), the unit sends five seconds of IBLC (in−band loop codes), then switches to Clear Test or BERT. When transmitting IBLC or the test pattern, the test LED blinks. When this switch is returned to the normal center position, the unit sends five seconds of loop down code (100) and then returns to its normal operating mode. When the Test switch is in the local position (LOC), the unit performs a bidirectional loopback (DTE−to−DTE and Network−to−Network) and the LOOP indicator lights.	Center

NOTE

For all MLOS links and Commercial T−1 links that use AMI line encoding, this switch is set to the Right.

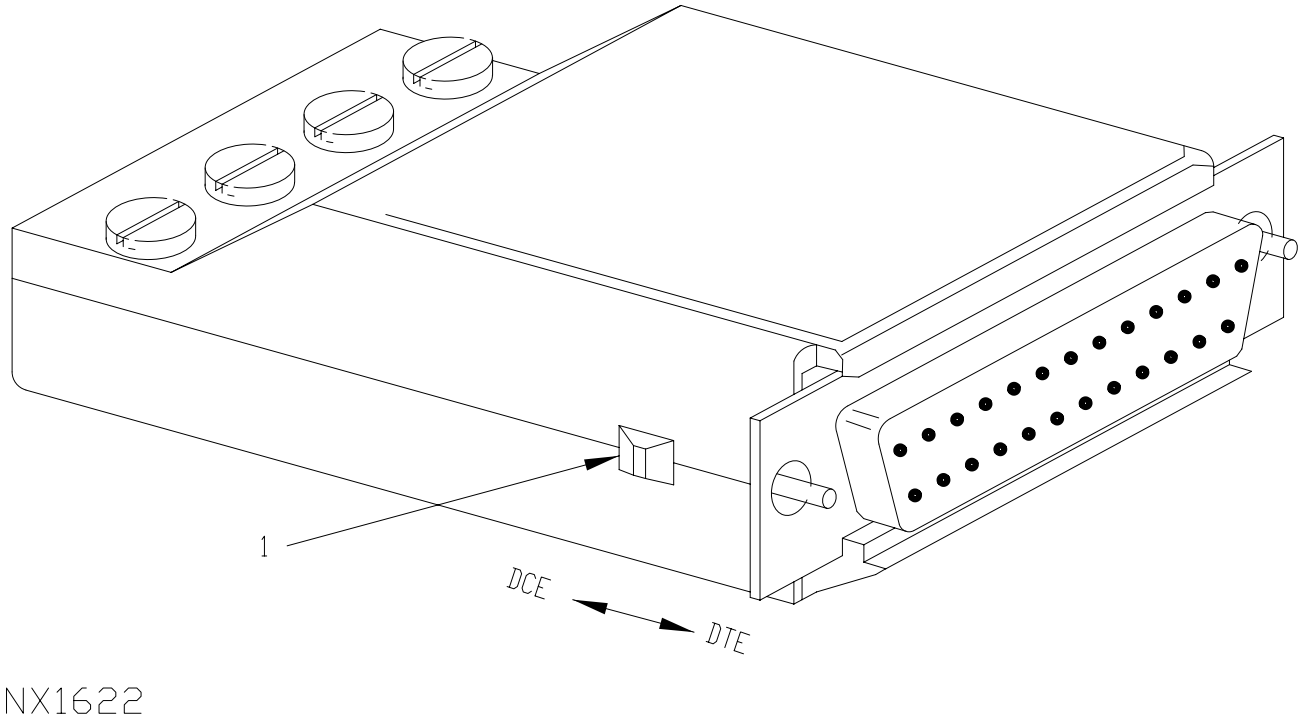

Figure 4–30. Short Haul Modem UD70A19

Table 4–22. Short Haul Modem UD70A19, Controls and Indicators

Figure 4–30 Index No.	Control/Indicator Nomenclature (Type)	Function	Normal Position/ State
1	DCE–TO–DTE Switch	To be used as either Data Communications Equipment (DCE) or Data Terminal Equipment (DTE) devices	DCE

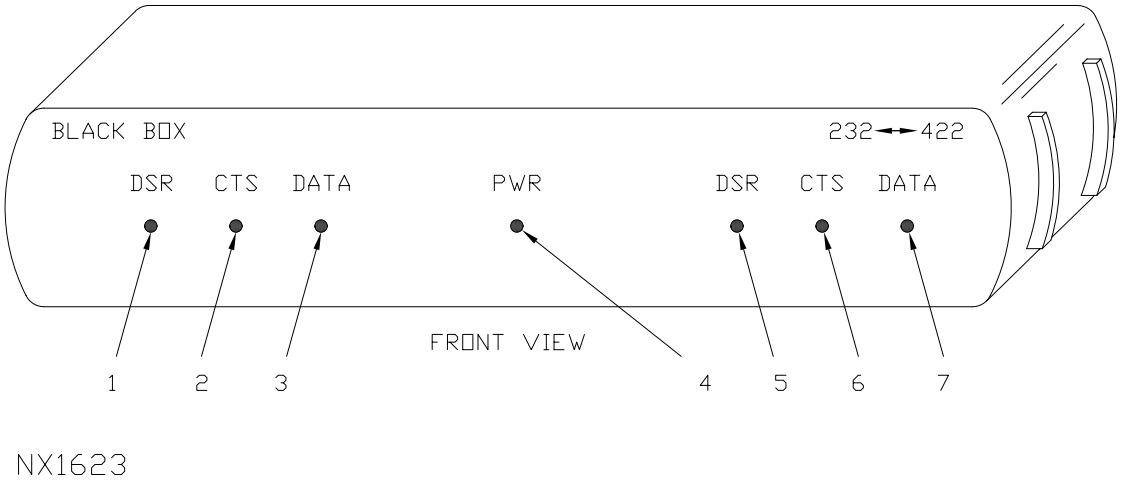

Figure 4–31. RS–232/RS–422 Converter (Black Box) UD70A20

Table 4–23. RS–232/RS–422 Converter UD70A20 (Black Box) Controls and Indicators

Figure 4–31 Index No.	Control/Indicator Nomenclature (Type)	Function	Normal Position/ State
1	DSR LED	Indicates data set ready condition on the RS–422 interface J1.	N/A
2	CTS LED	Indicates data can be sent over RS–422 interface J1.	N/A
3	DATA LED	Indicates data being sent on RS–422 interface connector J1.	N/A
4	PWR LED	Indicates power is applied to unit.	Lit
5	DSR LED	Indicates Data Set Ready (DSR) condition of the RS–232 interface connector J2.	N/A
6	CTS LED	Indicates data can be sent on RS–232 interface connector J2.	N/A
7	DATA LED	Indicates data being sent on RS–232 interface connector J2.	N/A

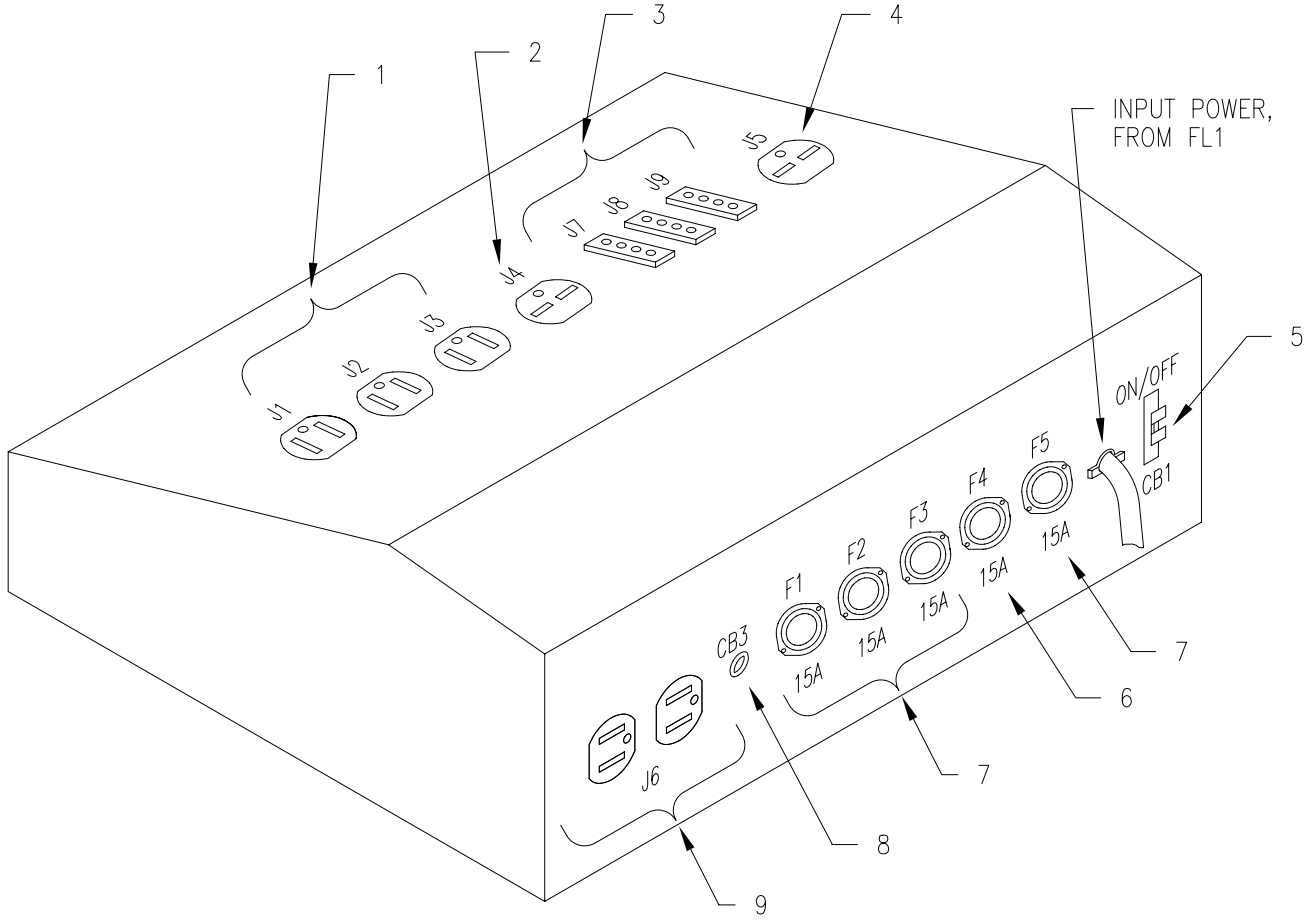

NX1624

Figure 4–32. AC Power Distribution Panel UD70A22

Table 4–24. AC Power Distribution Panel UD70A22 Controls and Indicators

Figure 4–32 Index No.	Control/Indicator Nomenclature (Type)	Function	Normal Position/ State
1	J1, J2, and J3 (power outlets)	Supplies 120 Vac power	N/A
2	J4 (power outlet)	Supplies 208 Vac power	N/A
3	J7, J8, and J9 (power outlets)	Supplies 120 Vac power	N/A
4	J5 (power outlet)	Supplies 208 Vac power	N/A
5	CB1 (circuit breaker)	Power On/Off for power distribution panel	ON
6	F4	300V, 15 amp fuse (spare)	N/A
7	F1, F2, F3, and F5 (fuses)	300V, 15 amp fuses F1 fuses J1 F2 fuses J2 F3 fuses J3 F4 fuses J4 F5 fuses J5	N/A
8	CB3 (pushbutton circuit breaker)	Resets J6	N/A
9	J6 (power outlets (2))	Supplies 120 Vac power	N/A

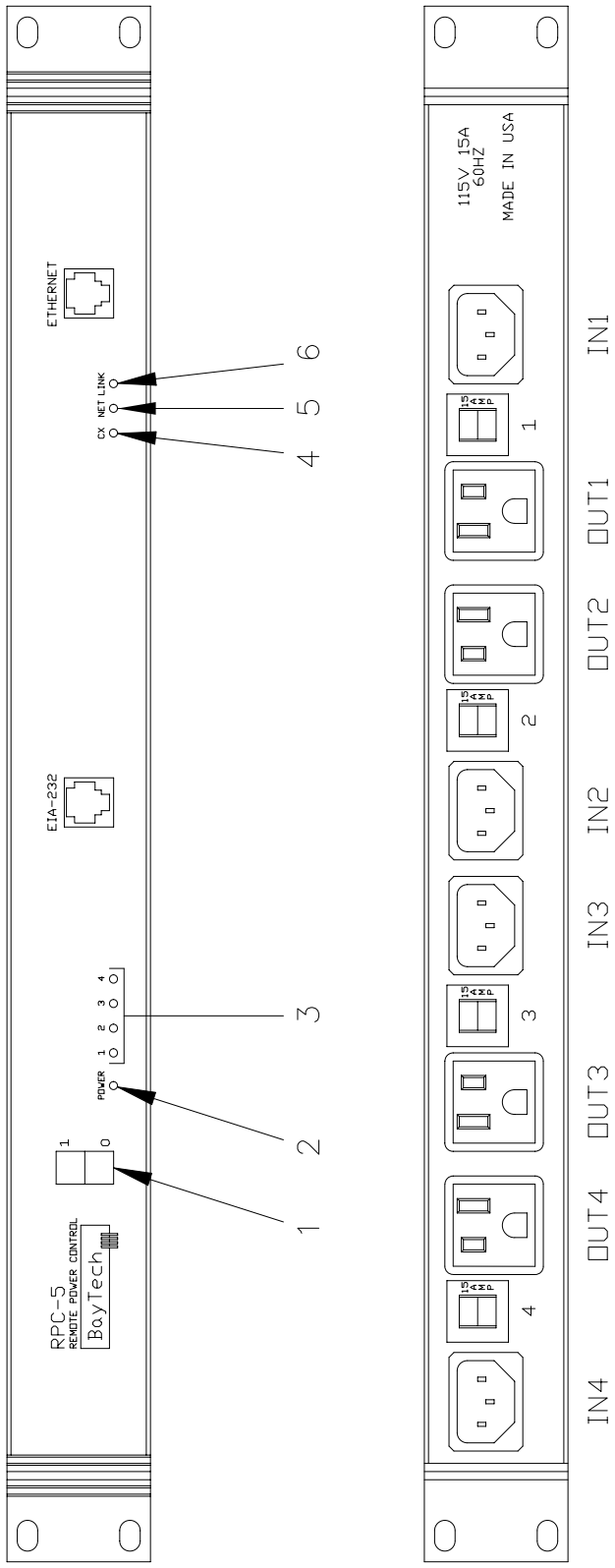

NX1625

Figure 4–33. RMS Power Administrator (Baytech RPC–5), UD70/170A28 and UD70/170A29

Table 4–25. RMS Power Administrator (Baytech RPC–5) UD70/170A28 and UD70/170A29 Controls and Indicators

Figure 4–33 Index No.	Control/Indicator Nomenclature (Type)	Function	Normal Position/ State
1	Power Switch	Turns Power On/Off (1/0) the Baytech Remote Power Control	On (1)
2	Power LED	On – indicates power is being supplied to the unit.	On
3	Receptacles 1–4 LEDs	On –indicates power is on to specific outlet.	On
4	CX LED	Indicates status upon initialization. Off – Normal unconnected operation Brief blink followed by solid illumination – Network or serial port connection Remains lit without a brief blink prior to illumination – Memory error Blinks 1 time per cycle – Hardware or NIC problem Blinks 2 times per cycle – Configuration error Blinks 3 times per cycle – Cable or hub connection fault Blinks 4 times per cycle – Duplicate IP–Address	Off
5	Net LED	Blinking – indicates data flow and network activity.	Blinking
6	Link LED	On – indicates link integrity. A satisfactory connection is made to the network.	On

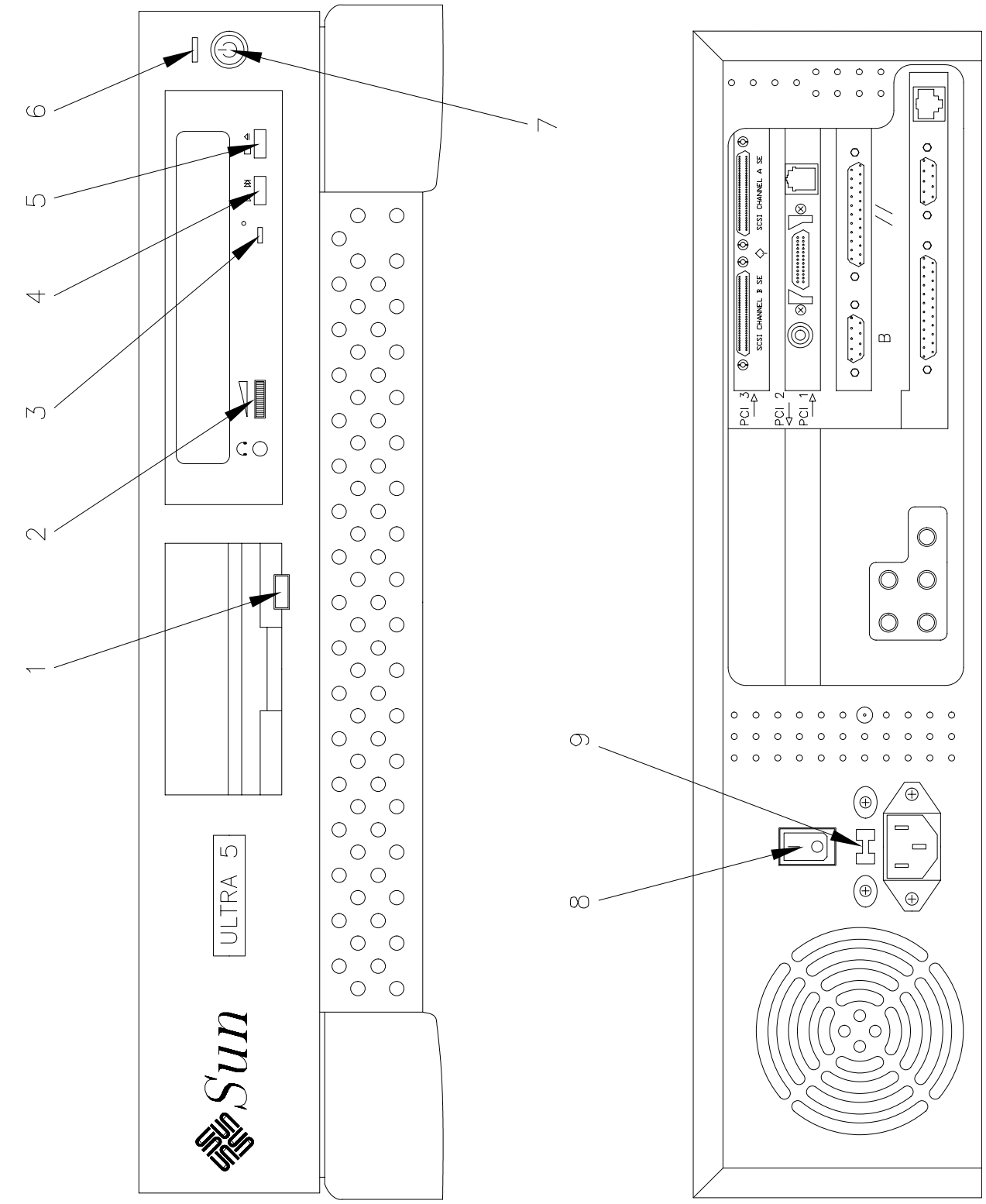

NX1674

Figure 4–34. MSCF Processor (Sun Ultra 5) UD71A1

Table 4−26. MSCF Processor (Sun Ultra 5) UD71A1 Controls and Indicators

Figure 4−34 Index No.	Control/Indicator Nomenclature (Type)	Function	Normal Position/ State
1	Eject Button for 3.5” floppy	Ejects the 3.5” floppy from the drive.	N/A
2	Volume Control for CD−ROM	Controls the volume for the CD−ROM through the headphones.	N/A
3	Access Light for CD−ROM	Blinking − the CD−ROM is being accessed.	Blinking
4	Play / Skip−Track Button	Start the playing of the CD−ROM or causes the CD−ROM to skip to the next track if already playing.	N/A
5	Stop / Eject Button	Stops the CD−ROM play, or if already stopped, will cause the CD−ROM to eject.	N/A
6	Power Light	On − Power is supplied to the Processor.	ON
7	Standby Button	If UNIX is running the standby button will give the user a menu option on screen to suspend, shutdown, or cancel. The Processor needs to be placed in standby before powering off. If UNIX is not running no effect from depressing the Standby button.	N/A
8	Power Switch	Turns Power On/Off (1/0) to the Processor.	ON (1)
9	Voltage Line Selector Switch	Selects voltage either 115V or 230V.	115V

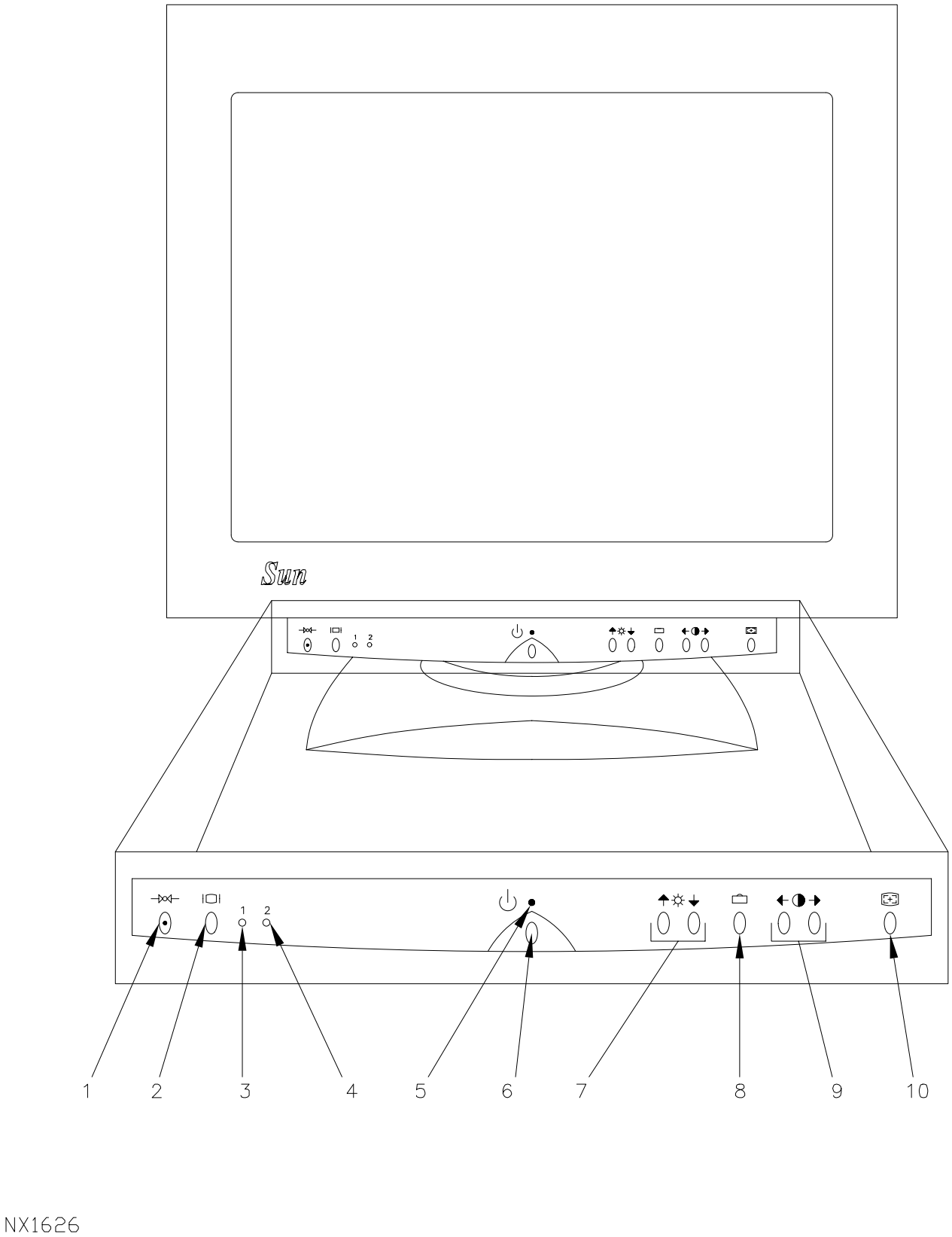

Figure 4–35. 21–Inch Monitor (Sun) UD71A2

Table 4–27. 21–Inch Monitor (Sun) UD71A2 Controls and Indicators

Figure 4–35 Index No.	Control/Indicator Nomenclature (Type)	Function	Normal Position/ State
1	Reset Button	Resets the adjustments to the factory default settings.	N/A
2	Video Input Selector	Selects the video input signal either 1 or 2.	N/A
3	Video Input #1 LED	On – video input #1 is selected.	ON
4	Video Input #2 LED	On – video input #2 is selected.	OFF
5	Power LED	On or blinking (green) – the monitor is turned on. On or blinking (orange) – the monitor is turned on and is in power saving mode.	Variable
6	Power Switch	Turns the monitor on and off.	ON
7	Brightness Buttons	Adjusts the brightness for the display.	N/A
8	Menu Button	Displays the Menu OSD (On Screen Display).	OFF
9	Contrast Buttons	Adjusts the contrast for the display.	N/A
10	Auto Sizing and Centering Button	Automatically sizes and centers the display.	N/A

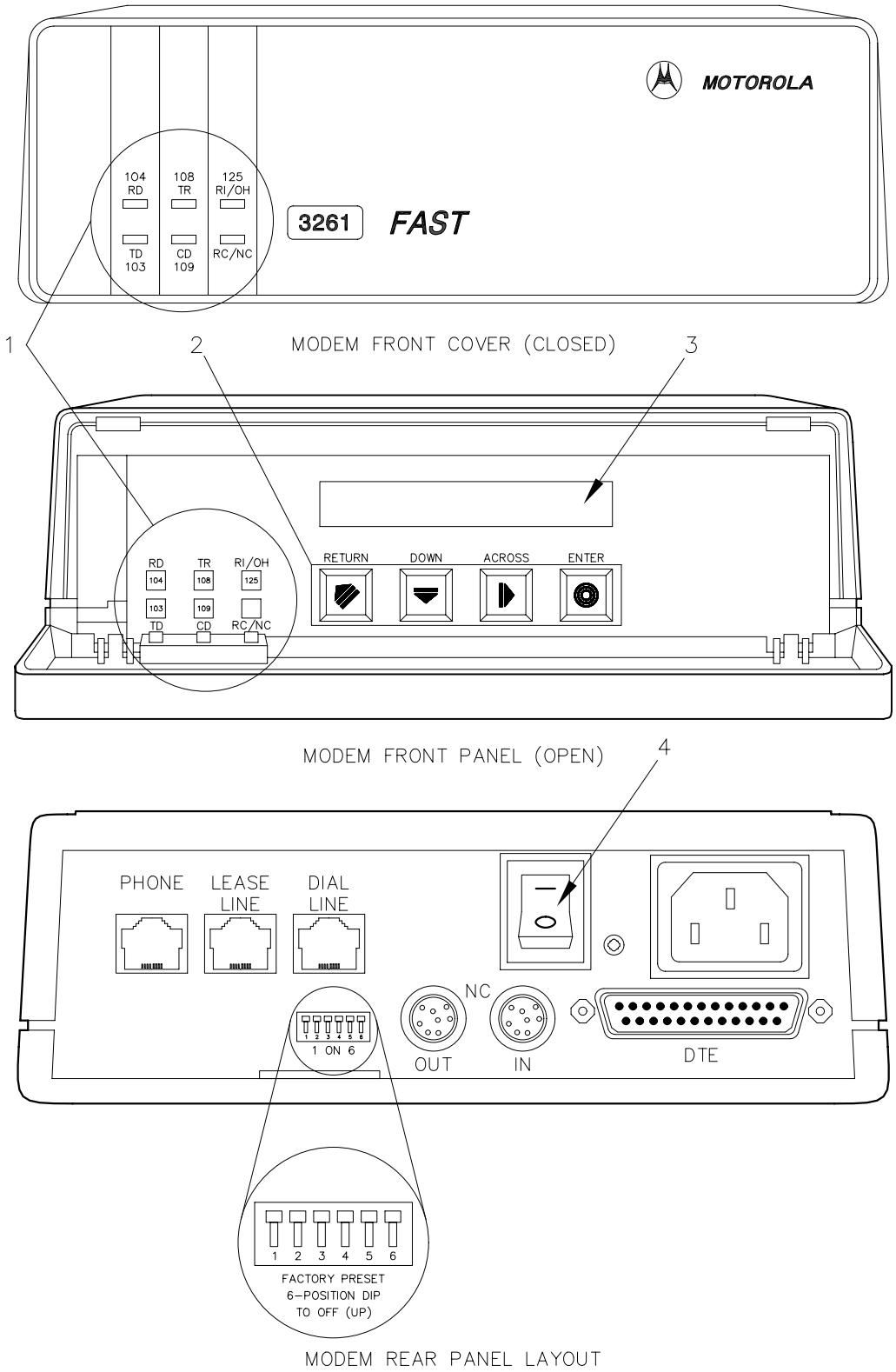

NX1627

Figure 4–36. MSCF Dedicated Port Modem (Codex 3261 FAST) UD71A5

Table 4–28. MSCF Dedicated Port Modem (Codex 3261 FAST) UD71A5 Controls and Indicators

Figure 4–36 Index No.	Control/Indicator Nomenclature (Type)	Function	Normal Position/ State
1	TD LED	Flashes when the modem accepts data to be transmitted from the local terminal.	N/A
	RD LED	Flashes when the modem passes received data to the local terminal.	N/A
	RI/OH LED	Illuminates when an incoming call is ringing. Also illuminates when the modem is off–hook and connected to the dial line.	N/A
	CD LED	Illuminates when the local modem is receiving a carrier signal (as defined by the modulation mode currently being used) from the remote modem or when the front panel DCD option is set to High.	N/A
	TR LED	Illuminates when a DTR signal from an attached terminal is detected.	N/A
	RC/NC LED	Flashes to indicate that the modem is under remote configuration (via front panel or AT ACU).	N/A
2	(RETURN)	Used with setting up the modem configuration and to view settings. See Section 6.6, paragraph 6.6.21.	
	(ACROSS)	Used with setting up the modem configuration and to view settings. See Section 6.6 paragraph 6.6.21.	
	(DOWN)	Used with setting up the modem configuration and to view settings. See Section 6.6 paragraph 6.6.21.	
	(ENTER)	Used with setting up the modem configuration and to view settings. See Section 6.6, paragraph 6.6.21.	
3	Status LED	Indicates modem is Ready	N/A
4	Power Switch	Turns Power On/Off (1/0) for the modem.	On (1)

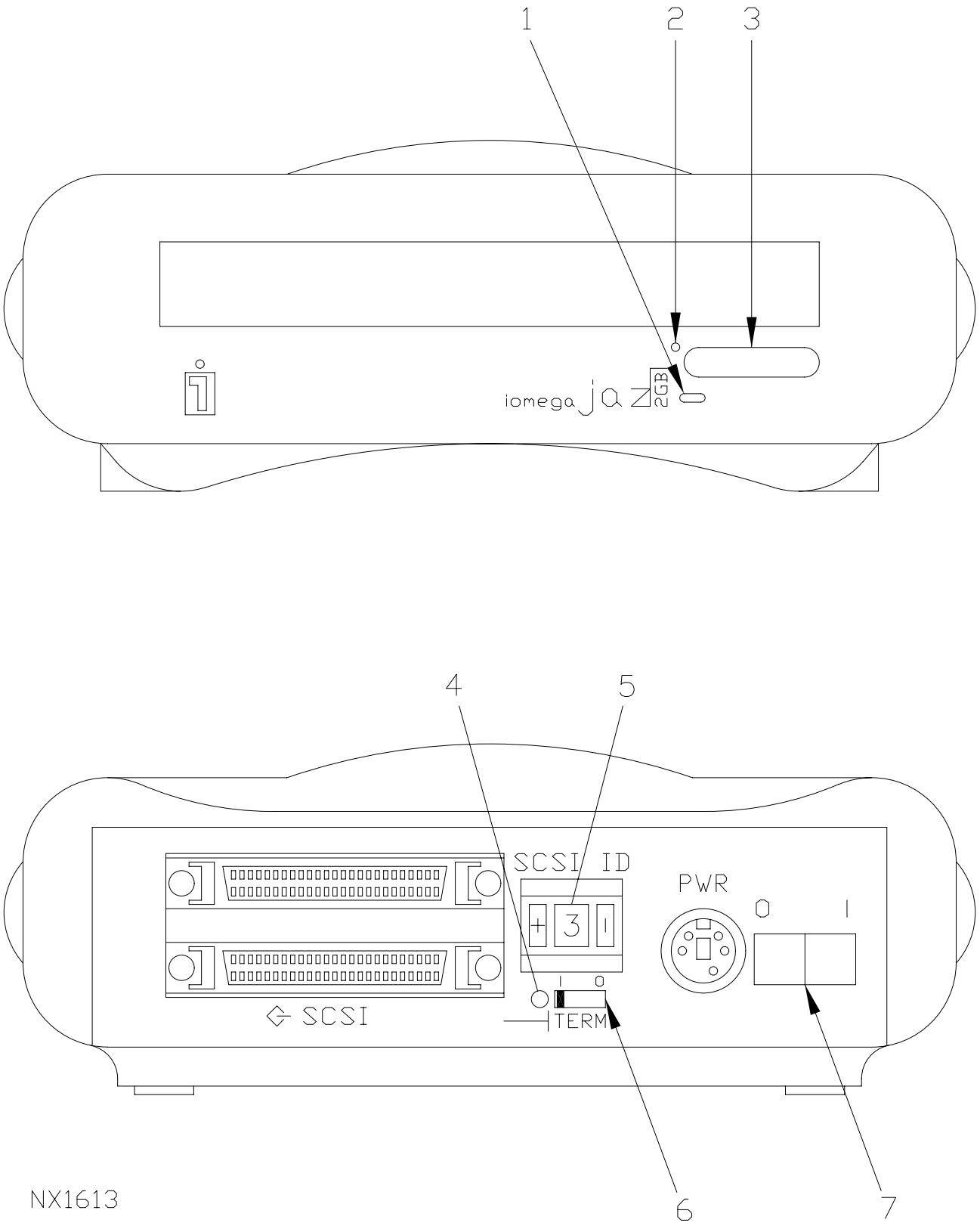

Figure 4–37. Backup Storage Device (Iomega Jaz) UD71A6

Table 4–29. Backup Storage Device (Iomega Jaz) UD71A6 Controls and Indicators

Figure 4–37 Index No.	Control/Indicator Nomenclature (Type)	Function	Normal Position/ State
1	Disk Access LED	On or flashing – indicates the drive is accessing the Jaz disk.	Variable
2	Emergency eject (inset) button	Used to eject the disk when the disk eject button is not working. Turn power OFF before inserting the end of a paperclip into inset.	N/A
3	Disk Eject Button	Ejects an inserted disk from the drive.	N/A
4	Termination LED	On – the drive has termination turned on.	On
5	SCSI ID Switch	The + and | buttons are used to set the SCSI ID for the drive. Values range from 0 to 7.	3
6	SCSI termination Switch	Used to set the termination for the drive. Values are 1 (On) and 0 (Off).	1
7	Power Switch	Turns the drive On and Off (1/0).	On (1)

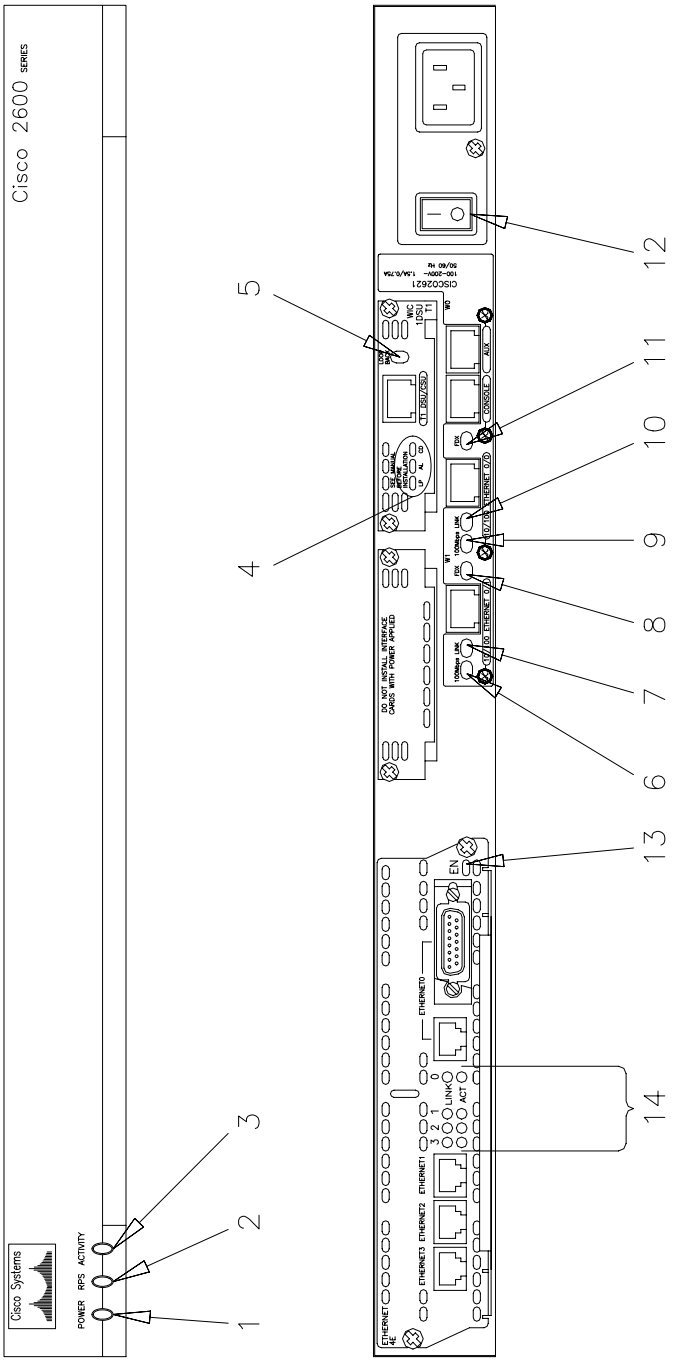

NX2482

Figure 4–38. Frame Relay Hub Router (Cisco 2621XM) UD75A1

Table 4–30. Frame Relay Hub Router (Cisco 2621XM) UD75A1 Controls and Indicators

Figure 4–38 Index No.	Control/Indicator Nomenclature (Type)	Function	Normal Position/ State
1	Power LED	Indicates the Router has power supplied.	On
2	RPS LED	Indicates RPS Status. Off – No RPS attached On – RPS is attached and operational Blinking – RPS is attached but has a failure	Off
3	Activity LED	Indicates network activity. Off – No network activity Blinking – Network activity is occurring. The blink rate reflects the level of activity.	Blinking
4	CSU/DSU LEDs	Indicates CSU/DSU Connection Status. LP–Loopback yellow LED, loopback detected AL–Alarm yellow LED CD–Carrier Detect green LED.	 LP: Off AL: Off CD: On
5	Loopback Button	Depress to place into loopback mode, depress again to turn loopback off.	N/A
6	Ethernet 0/1 Mbps	On – The speed of the interface is 100 Mbps. (NWS RPG Router or MSCF Printer*)	Ethernet 0/1: On
7	Ethernet 0/1 LINK	On – A link has been established with the LAN Switch. (NWS RPG Router or MSCF Printer*)	Ethernet 0/1: Off
8	Ethernet 0/1 FDX	On – The interface is in full–duplex Mode (FDX).	Ethernet 0/1: Off
9	Ethernet 0/0 Mbps LEDs	Off – The speed of the interface is 10 Mbps.	Ethernet 0/0: Off
10	Ethernet 0/0 LINK LEDs	On – A link has been established with the AWIPS LAN Switch.*	Ethernet 0/0: On
11	LEDs Ethernet 0/1 FDXLEDs	Off – The interface is in half–duplex mode	Ethernet 0/0: On
12	Power Switch	Turns Power On/Off (1/0) to the Router	On (1)

Table 4–30. Frame Relay Hub Router (Cisco 2621XM) UD75A1 Controls and Indicators – Continued

Figure 4–38 Index No.	Control/Indicator Nomenclature (Type)	Function	Normal Position/ State
13	EN Network Module LED	Indicates the module has passed its self–tests and is available to the Router	On
14	Activity and Link LEDs	Each Ethernet port has two LEDs. The ACT (Activity) LED indicates the router is sending or receiving transmissions.	On
		The LINK LED indicates the port is receiving the link integrity signal from the MSCF processor or MSCF printer*.	ACT: Blinking
		ACT Off – Indicates no activity. ACT Blinking – Indicates activity occurring. LINK Off – Indicates no link established.	LINK: On*

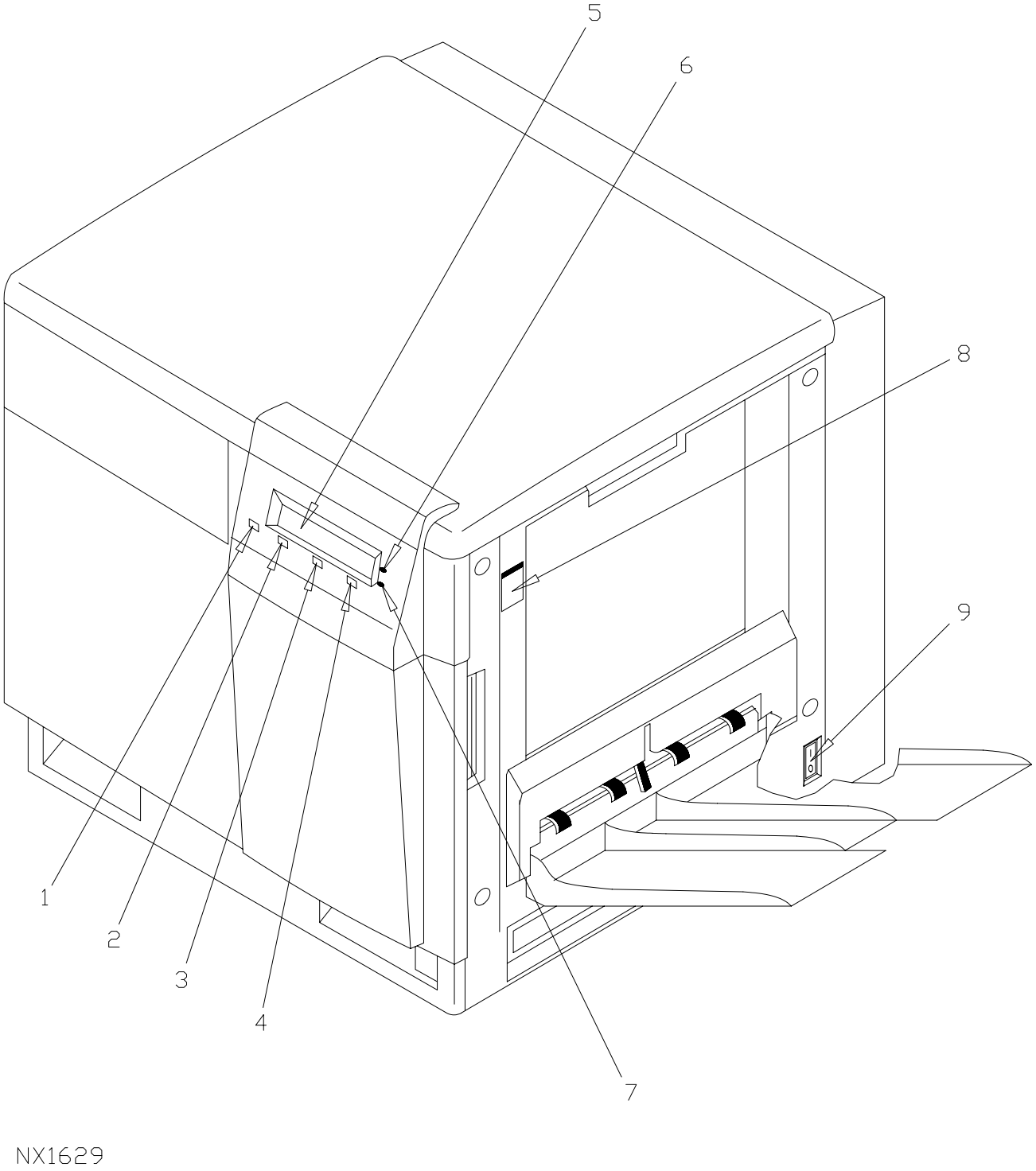

Figure 4–39. Printer (Xerox/Tektronix Phaser 750) UD79A1

Table 4–31. Printer (Xerox/Tektronix Phaser 750) UD79A1 Controls and Indicators

Figure 4–39 Index No.	Control/Indicator Nomenclature (Type)	Function	Normal Position/ State
1	Exit Button	Exits from any menu or sub–menu the user has entered and returns to the previous menu.	N/A
2, 3, 4	Menu Selection Buttons	Navigates the printer's various menus.	N/A
5	LED Window	Supplies menu commands and messages to the user.	"Ready"
6	Power/Printing LED	On green – printer is in standby. Blinking green – printing in process.	On
7	"Printer Not Ready" LED	Blinking orange – indicates the printer is not in a ready state. The LED window will display problem and solution.	Off
8	Toner Door Release	Releases door to allow access to the toner cartridges.	N/A
9	Power Switch	Turns Power On/Off (1/0) to the printer.	On (1)

Section 4.5. RPG Shutdown and Startup Procedures

NOTES

This chapter and its corresponding sections refer to the RPGPCA as UD70. Unless otherwise specified for FAA redundant systems, this information also applies to RPGPCA UD170.

Command entries and mouse selections are shown in **bold** type. Variable names are shown in a unique font (e.g., *variable_name*). Within a command string entry, the variable placeholders are not bold type; however, all portions of the command that are entered exactly as shown are in bold type. The variable placeholder within the command string must be replaced with a name, address, etc. unique to each system. The user is told how to formulate the entry, or directed where to find this information. Since the keyboard in use may have either an "Enter" key or a "Return" key, the end of the command line is delineated with a **<CR>**. Unless stated otherwise, each command line shown must be "entered" to be processed. Also, directory names/paths shown outside of a command example are *italicized* for clarity.

For mouse selections, the word "click" is a standard single click of the left mouse button. The word "drag" is a standard left mouse click and hold while moving the mouse pointer at the same time. Dragging can be used to move a window, highlight text, or make a menu selection. The symbol ▶ is used to indicate subsequent left clicks through sub–menu selections. When a right, middle, or double–click is required, it is specifically indicated.

4.5.1 INTRODUCTION.

This section contains procedures for the OS shutdown as well as the complete shutdown and initial startup of the RPG, BDDS, and MSCF equipment, including the Frame Relay Hub Router, and the Remote RDA Maintenance Terminal. These procedures are to be used only when the equipment in the entire RPG is to be shutdown for an extended period of time (over 24 hours) or to restore the RPG equipment after an extended shutdown. See Section 6.5 for detailed power down/up procedures for use with specific types of maintenance such as Line Replaceable Unit (LRU) replacement. For the RPG processor only, the Applications Software should be stopped IAW the procedures in Section 4.6, Table 4–41, prior to shutting down the equipment. For all processors, the OS should be shutdown IAW Table 4–32. To completely shutdown all of the equipment, perform the procedures in Table 4–33 for the BDDS, Table 4–34 for the RPG, Table 4–35 for the MSCF Group (MSCF Terminal, Frame Relay Hub Router, and Printer), and Table 4–36 for the Remote RDA Maintenance Terminal. To startup the equipment after an extended shutdown period, perform the procedures in Table 4–37 for the RPG, Table 4–38 for the BDDS, Table 4–39 for the MSCF Group (MSCF Terminal, Frame Relay Hub Router, and Printer), and Table 4–40 for the Remote RDA Maintenance Terminal. The following is an index of all the procedures in this section.

Index

Procedure	Reference
Operating System Shutdown Procedure	Table 4–32
Base Data Distribution Server Shutdown Procedure	Table 4–33
RPG Group Shutdown Procedure	Table 4–34
Master System Control Function Group Shutdown Procedure	Table 4–35
Remote RDA Maintenance Terminal Shutdown Procedure	Table 4–36
RPG Group Startup Procedure	Table 4–37
Base Data Distribution Server Startup Procedure	Table 4–38
Master System Control Function Group Startup Procedure	Table 4–39
Remote RDA Maintenance Terminal Startup Procedure	Table 4–40

4.5.2 SHUTDOWN PROCEDURES.

This section contains five shutdown procedures. Prior to performing the RPG Group Shutdown Procedure (Table 4–34), shutdown the RPG Operating System (Table 4–32) and the Base Data Distribution Server (Table 4–33).

WARNING

Lethal voltages (from commercial power, Cathode Ray Tubes (CRTs), high–voltage power supplies, and low–voltage, high current power supplies) are present in much of the RPG Group equipment. Observe appropriate safety precautions at all times to ensure personnel safety. The maintenance technician should be familiar with the safety summary at the beginning of this document prior to performing any maintenance procedure.

Table 4–32. Operating System Shutdown Procedure

Step	Equipment/Location	Action/Procedure	Indication/Reference
1	The Maintenance Terminal, Keyboard, and Mouse in the RPG Cabinet.	If within the CDE, exit CDE by clicking the **EXIT** button on the CDE Front Panel and **OK** in the confirmation window.	Exit the CDE.
2	RPG UD70A7	Push the Power button on the front of the processor.	No immediate response for approximately 50 seconds then another 20 seconds to complete the shutdown. Stops the applications software, halts the OS, and places the user at the `ok` prompt.

WARNING

AC power is still present in the RPG cabinets.

Table 4–33. Base Data Distribution Server Shutdown Procedure

Step	Equipment/Location	Action/Procedure	Indication/Reference
1	BDDS UD70A1 Processor	Exit CDE by clicking on the **EXIT** button on the CDE Front Panel and **OK** in the confirmation window.	Exit the CDE.
2	BDDS UD70A1	Push the Power button on the front of the processor.	Takes approximately 20 seconds to complete the shutdown. Halts the OS and places the user at the `ok` prompt.
3	BDDS UD70A1	Set the Power switch (rear of unit) to the OFF (0) position.	Removes power from the BDDS Processor.

Table 4–34. RPG Group Shutdown Procedure

Step	Equipment/Location	Action/Procedure	Indication/Reference
1	UPS UD70A11	Set the Power switch ("0" button) to the OFF (0) position.	Removes power from most of the equipment in the RPG cabinets.
2	Power Distribution Panel UD70A22	Set the circuit breaker (CB1) to the OFF (0) position.	Removes power from the UPS and Monitor. [The Modem Chassis, Cabinet Fans, and RS232/422 Converter (if present) will still be powered on.]
3	For FAA REDUNDANT SYSTEMS, Secondary AC Power Panels UD7A3 (for Channel 1) and UD7A29 (for Channel 2) located on the wall of the Equipment Shelter.	For Channel 1, at the UD7A3 Secondary AC Power Panel, set circuit breakers CB25, 27, and 29 (ganged) to the OFF position, and for Channel 2, at the UD7A29 Secondary AC Power Panel, set circuit breakers CB25, 27, and 29 (ganged) to the OFF position.	Removes power from the Channel 1 UD170 RPGPCA cabinets and the Channel 2 UD70 RPGPCA cabinets.
	For DoD SYSTEMS, Secondary AC Power Panel UD7A3 located on the wall of the Equipment Shelter.	Set circuit breakers CB25, 27, and 29 (ganged) to the OFF position.	Removes power from the RPGPCA UD70 cabinets.
	For NWS SYSTEMS, Office/Building Power Panel.	Set the appropriate circuit breakers to the OFF position.	Removes power from the RPGPCA UD70 cabinets.
4	MLOS Equipment Shelter Secondary Power Panel UD13A1	Set CB2 to the OFF position (if used).	Removes power from the MLOS Transceiver cabinet.

Table 4–35. Master System Control Function Group Shutdown Procedure

Step	Equipment/Location	Action/Procedure	Indication/Reference
1	MSCF UD71	Exit CDE by clicking on the **EXIT** button on the CDE Front Panel and **OK** in the confirmation window.	Exit the CDE.
2	MSCF UD71	Push the Power button on the front of the processor.	Takes approximately 20 seconds to complete the shutdown. Halts the OS and places the user at the `ok` prompt.
3	MSCF Processor UD71A1	Set the Power switch (rear of unit) to the OFF (0) position.	Removes power from the MSCF Processor.
4	MSCF Monitor UD71A2	Set the Power switch to the OFF position.	Removes power from the MSCF Monitor.
5	MSCF Jaz Disk Drive UD71A6	Set the power switch to the OFF position.	Removes power from the MSCF Jaz Disk Drive.

NOTE

Steps 6 and 7 apply only to the optional equipment installed on Distant MSCF Group (site specific).

6	MSCF Standalone Dedicated Modem UD71A5	Set the Power switch to the OFF (0) position.	Removes power from the MSCF Standalone Dedicated Modem.
7	MSCF Frame Relay Hub Router UD75	Set the Power switch to the OFF position.	Removes power from the MSCF Frame Relay Hub Router.
8	MSCF Printer UD79A1	Set the Power switch to the OFF position.	Removes power from the MSCF Printer.

Table 4–36. Remote RDA Maintenance Terminal Shutdown Procedure

Step	Equipment/Location	Action/Procedure	Indication/Reference
1	Remote RDA Maintenance Terminal UD32A9/10	Set the Power switches to the OFF (0) position.	Removes power from the CPU and Monitor.
2	STATMUX UD32A3	Set the Power switch to the OFF position.	Removes power from the STATMUX.
3	Standalone Modem UD32A4	Set the Power switch to the OFF (0) position.	Removes power from the Modem.

4.5.3 STARTUP PROCEDURES.

This section contains four startup procedures. Some of the steps are dependent on the configuration of the RPG and MSCF. Refer to the special notes in paragraph 4.5.3.1 before proceeding with any of the following startup procedures.

4.5.3.1 Special Notes for RPG/MSCF Group Startup. The procedures in Table 4–37, Table 4–38, and Table 4–39 assume that the OS and appropriate Application Software are on the associated processor's hard disk drive and will automatically boot into processor memory. The MSCF and BDDS processors are designed to start the OS and Applications Software automatically upon powering on the system, and therefore, no OS nor Applications Software Startup Procedure is necessary for these processors when this procedure is performed. This would also be true of the RPG processor if applications software was running when it was last shutdown. However, in almost all procedures that require a OS–level shutdown, the RPG applications software is stopped prior to shutting down the OS. Therefore, for the RPG, it is required to restart the Applications Software at the end of its startup procedure. To start other Applications Software programs, refer to the appropriate procedures that are referenced in the Consolidated Procedures Index in Section 4.6.

4.5.3.1.1 Narrowband Communications. Narrowband communications equipment indicates a fault and/or a disconnect condition whenever the equipment at either end of the link is uninitialized or inoperable. In addition, connection and data transfer is inoperable if the controlling software in the RPG processor is not initialized (running).

Table 4–37. RPG Group Startup Procedure

Step	Equipment/Location	Action/Procedure	Indication/Reference
1	MLOS Equipment Shelter Secondary Power Panel UD13A1	Set CB2 to the ON position (if used).	Applies power to the MLOS Transceiver cabinet.
2	For FAA REDUNDANT SYSTEMS, Secondary AC Power Panels UD7A3 (for Channel 1) and UD7A29 (for Channel 2) located on the wall of the Equipment Shelter.	For Channel 1, at the UD7A3 Secondary AC Power Panel, set circuit breakers CB25, 27, and 29 (ganged) to the ON position, and for Channel 2, at the UD7A29 Secondary AC Power Panel, set circuit breakers CB25, 27, and 29 (ganged) to the ON position.	Applies power to the Channel 1 UD170 RPGPCA cabinets and the Channel 2 UD70 RPGPCA cabinets.
	For DoD SYSTEMS, Secondary AC Power Panel UD7A3 located on the wall of the Equipment Shelter.	Set circuit breakers CB25, 27, and 29 (ganged) to the ON position.	Applies power to the RPGPCA UD70 cabinets.
	For NWS SYSTEMS, Office/Building Power Panel.	Set the appropriate circuit breakers to the ON position.	Applies power to the RPGPCA UD70 cabinets.

Table 4–37. RPG Group Startup Procedure – Continued

Step	Equipment/Location	Action/Procedure	Indication/Reference
3	Power Distribution Panel UD70A22	Set the circuit breaker (CB1) to the ON (1) position.	Applies power to the UPS and to all of the equipment in the RPG cabinets that is not on the UPS.
4	UPS UD70A11	Set the Power switch to the ON (1/Test) position.	Applies power to all other equipment in the RPG cabinets, and the RPG system boots up.
WARNING AC power is now present in the RPG cabinets. **NOTE** Steps 5 and 6 apply only to the NWS and DoD configurations.			
5	For NWS and DoD SYSTEMS, at the `Login` screen on the Maintenance Terminal, Keyboard, and Mouse in the RPG Cabinet.	Enter **raritan<CR>** for the user (no password).	The `Selection Menu` will appear on the monitor.
6	For NWS and DoD SYSTEMS, at the `Selection Menu` on the Maintenance Terminal in the RPG Cabinet.	Using the ↓ and ↑ keys on the keyboard, highlight the RPG channel. Press **<CR>** to invoke the selection.	Selects the RPG Processor for display on the terminal.
7	RPGPCA workstation.	After the RPG processor boots up, login in as a normal user and verify normal system functionality.	As long as the applications software was not stopped prior to shutting down the RPG's OS (Table 4–32), it will automatically restart when the RPG processor boots up.

Table 4–38. Base Data Distribution Server Startup Procedure

Step	Equipment/Location	Action/Procedure	Indication/Reference
1	BDDS UD70A1 Processor	Set the Power switch (rear of unit) to the ON (1) position.	Applies power to the BDDS Processor, and the BDDS boots all the way up.

Table 4–39. Master System Control Function Group Startup Procedure

Step	Equipment/Location	Action/Procedure	Indication/Reference
1	MSCF Monitor UD71A2	Set the Power switch to the ON position.	Applies power to the MSCF Monitor.
2	MSCF Printer UD79A1	Set the Power switch to the ON position.	Applies power to the MSCF Printer.
3	MSCF Jaz Disk Drive UD71A6	Set the Power switch to the ON position.	Applies power to the MSCF Jaz Disk Drive.

NOTE

Step 4 or 5 applies only to the Distant MSCF Group (site specific).

4	MSCF Frame Relay Hub Router UD75	Set the Power switch to the ON (1) position.	Applies power to the MSCF Frame Relay Hub Router.
5	MSCF Standalone Dedicated Modem UD71A5	Set the Power switch (rear of unit) to the ON (1) position.	Applies power to the MSCF Standalone Dedicated Modem, and the LCD displays a status message.
6	MSCF Processor UD71A1	Set the Power switch (rear of unit) to the ON (1) position.	Applies power to the MSCF Processor, and the MSCF system boots all the way up.
7	Distant MSCF Processor UD71 Group located at NWS WFOs	Repeat steps 1, 2, 3, and 6.	Applies power to Distant MSCF equipment.

Table 4–40. Remote RDA Maintenance Terminal Startup Procedure

Step	Equipment/Location	Action/Procedure	Indication/Reference
1	Remote RDA Maintenance Terminal UD32A9/A10	Set the Power switches to the ON (1) position.	Applies power to the CPU and Monitor.
2	STATMUX UD32A3	Set the Power switch (rear of unit) to the ON position.	Applies power to the STATMUX.
3	Standalone Modem UD32A4	Set the Power switch (rear of unit) to the ON (1) position.	Applies power to the Modem.
4	Standalone Modem UD32A4	Open the front door of the modem. Observe the display.	Wait for self test to complete and this message to appear: `3261 Ready.`
5	Standalone Modem UD32A4	Press the Return button until this message is displayed: `Disconnect T/D?`	`Disconnect T/D?` is displayed.
6	Standalone Modem UD32A4	Press the Across button until this message is displayed: `Dial from # = 1`	`Dial from # = 1` is displayed.
7	Standalone Modem UD32A4	Press the Enter button.	Establishes connection to the RDA.

Section 4.6. Unique Operating System Requirements/Programs

NOTE

This chapter and its corresponding sections refer to the RPGPCA as UD70. Unless otherwise specified for FAA redundant systems, this information also applies to RPGPCA UD170.

4.6.1 INTRODUCTION.

Some UNIX OS level manipulation is necessary for the Sun processors to administer the system and ensure the integrity of the system. Many of these programs (processes) are executed from a terminal command line but may also include use of a Human Computer Interface (HCI). Procedures are provided for all three processors to include:

- Stopping/starting applications software (paragraph 4.6.2)
- Software loads (paragraph 4.6.3)
- Software backups (paragraph 4.6.4)
- Software restorals (paragraph 4.6.5)
- Miscellaneous load/setup procedures (paragraph 4.6.6)
- Processor system initialization (reboot) procedures (paragraph 4.6.7)
- System cleanup actions (paragraph 4.6.8)
- Use of “admintool” to add groups, users, etc. (paragraph 4.6.9)

This section only discusses critical processes which must be performed on a periodic basis or when dictated by another event (e.g., receipt of new software). Paragraph 4.6.2 discusses Applications–level software; however, it is only discussed in this section to provide procedures for the user to stop and start applications software using OS–level commands. For all three Sun processor applications functionalities, these commands would normally not be performed because normal interaction with the applications software is through the graphical HCIs (see Section 4.7 for additional information for the RPG’s HCI ran at the RPG or MSCF workstations). Section 4.3 discusses the majority of the more common UNIX commands (processes) which may be used within this section or at other times on a routine basis for non–critical functions.

NOTE

With the exception of paragraph 4.6.2, requirements discussed in this section would normally be performed by a System Administrator and most must be performed in the Superuser mode.

NOTE

Command entries and mouse selections are shown in this section in **bold** type. Variable names are normally shown with a unique font (e.g., *variable_name*). Within a specified command string that must be entered, the variable placeholders are not bold type; however, all portions of the command that are entered exactly as shown are in bold type. The variable placeholder within the command string must be replaced with a name, address, etc. unique to each system and the user is told how to formulate the entry, or directed to where to find this information. Since the keyboard in use may have either an "Enter" key or a "Return" key, the end of the command line is delineated with a **<CR>**. Unless stated otherwise, each command line shown must be "entered" to be processed. Also, directory names/paths shown outside of a command example are *italicized* for clarity purposes.

This section will discuss some graphical manipulations using a mouse. The word "click" indicates a standard left mouse click. When a right click or double–click is required, it is specifically indicated. The symbol ▶ is used to indicate subsequent left clicks through sub–menu selections.

NOTE

Procedures requiring Sun operating system level Superuser (root) privileges are marked as follows at the right margin:

SU

The following is a consolidated index of all procedures in this section:

Consolidated Procedures Index

Procedure	Reference
Stopping the RPG Applications Software	Table 4–41
Starting the RPG Applications Software (Normal)	Table 4–42
Starting the RPG Applications Software With Clean Start Mode	Table 4–43
Stopping the RPG's HCI at MSCF	Table 4–44
Stopping the MSCF Application	Table 4–45
Starting the MSCF Application	Table 4–46
Starting the RPG's HCI at MSCF	Table 4–47
Stopping the BDDS Software	Table 4–48

Consolidated Procedures Index – Continued

Procedure	Reference
Starting the BDDS Software	Table 4–49
Stopping the PowerChute Display	Table 4–50
Starting the PowerChute Display	Table 4–51
RPG Processor Full System Software Load	Table 4–52
BDDS Processor Full System Software Load	Table 4–53
MSCF Processor Full System Software Load	Table 4–54
Load of New RPG Applications Software	Table 4–55
Load of New MSCF Applications Software	Table 4–56
Load of New BDDS Applications Software	Table 4–57
System Software Backup Using ufsdump (Example)	Table 4–58
RPG Applications Software Backup	Table 4–59
MSCF Applications Software Backup	Table 4–60
Backup of BDDS User Account Directories Using tar	Table 4–61
Backup of RPG or MSCF User Account Directories Using tar	Table 4–62
Adaptation Data Backups at RPG Workstation	Table 4–63
Adaptation Data Backups at MSCF Workstation	Table 4–64
System Software Restoral Using ufsrestore (Individual File System Example)	Table 4–65
RPG Applications Software Restoral	Table 4–66
MSCF Applications Software Restoral	Table 4–67
Restoral of RPG or MSCF User Account Directories Made Using tar	Table 4–68
Restoral of BDDS User Account Directories Made Using tar	Table 4–69
RPG Adaptation Data Restoral at RPG Workstation	Table 4–70
MSCF Adaptation Data Restoral at MSCF Workstation	Table 4–71
MSCF Dial Modem Setup	Table 4–72
Jaz Drive Disk Format and Mounting for Archive III (Preferred Method)	Table 4–73
Jaz Drive Disk Format and Mounting for Archive III (Alternate Method)	Table 4–74
Jaz Drive Disk Format and Mounting for Backup Purposes	Table 4–75
Magma Four/Eight Port Serial Card Driver Load	Table 4–76
Date/Time Set Process	Table 4–77
Normal Processor System Reinitialization Procedure	Table 4–78

Consolidated Procedures Index – Continued

Procedure	Reference
Abnormal Processor System Reinitialization Procedure	Table 4–79
Find and Clean Out Core Dumps	Table 4–80
Clean Out Print Queues	Table 4–81
Addition of Groups	Table 4–82
Addition of Users	Table 4–83

4.6.2 STOPPING/STARTING APPLICATIONS SOFTWARE.

This paragraph provides procedures for stopping/starting all applications level software from the command line. Paragraphs 4.6.2.1 and 4.6.2.2 deal with stopping/starting the RPG applications software running on the RPG processor (UD70/170A7). Paragraphs 4.6.2.3 and 4.6.2.4 deal with stopping/starting the MSCF Client software running on the MSCF (UD71A1). Paragraphs 4.6.2.5 and 4.6.2.6 deal with stopping/starting the BDDS software running on the BDDS processor (UD70A1). Paragraphs 4.6.2.7 and 4.6.2.8 deal with stopping/starting the PowerChute display (either graphical or text based) on the RPG processors. This is only for the display –– the actual UPS monitoring software is running all the time.

NOTE

For all three Sun processor applications functionalities, these commands would normally not be performed because normal interaction with the applications software is through the graphical HCIs (see Section 4.7 for additional information for the RPG's HCI ran at the RPG or MSCF workstations). Also, starting with ROC software development release version 1.86, system users will always log into the Sun processors under their own accounts, and then have access privileges to applications software functionalities as needed. In many cases within this section, this is referred to as "logging in as a normal user" or possibility have an indication of "At a normal user prompt" (as opposed to "At a root prompt" or "At a # prompt").

Index, Starting/Stopping Applications Software

Procedure	Reference
Stopping the RPG Applications Software	Table 4–41
Starting the RPG Applications Software (Normal)	Table 4–42
Starting the RPG Applications Software With Clean Start Mode	Table 4–43
Stopping the RPG's HCI at MSCF	Table 4–44

Index, Starting/Stopping Applications Software – Continued

Procedure	Reference
Stopping the MSCF Application	Table 4–45
Starting the MSCF Application	Table 4–46
Starting the RPG's HCI at MSCF	Table 4–47
Stopping the BDDS Software	Table 4–48
Starting the BDDS Software	Table 4–49
Stopping the PowerChute Display	Table 4–50
Starting the PowerChute Display	Table 4–51

4.6.2.1 Stopping the RPG Applications Software. Normally, the RPG software can be stopped from the RPG HCI at the MSCF workstation or an RPG HCI running on the RPG workstation in the RPGPCA. In the event that the software can not be stopped through the graphical interface, the following procedure can be used to stop the software.

NOTE

These procedures are written based upon being at the RPG workstation in the UD70/170 RPGPCA. If being performed from the MSCF, a telnet session would have to be established to the RPG (two possible RPGs for FAA Redundant)

Table 4–41. Stopping the RPG Applications Software

STEP	ACTION/PROCEDURE	RESPONSE/COMMENTS
	NOTE If this is being performed at the RPG workstation in the RPGPCA cabinet and there is a BDDS installed, Raritan user channel 1 (RPG) must be selected. Activate mouse and use the on–screen menus to login as **raritan<CR>** user (no password) or, if a screen saver is not active yet, hit the **<Scroll Lock>** key twice quickly to activate the on–screen menus. Then select the RPG user channel.	
1	At a normal user prompt, enter: **stop<CR>**	The "stop" alias calls the "mrpg shutdown" command which stops the applications software. A prompt will appear in approximately 15 seconds but wait an additional 15 seconds before proceeding.

Table 4−41. Stopping the RPG Applications Software − Continued

STEP	ACTION/PROCEDURE	RESPONSE/COMMENTS
2	At a normal user prompt, enter: **rpg_ps<CR>**	This will display a list of the active RPG processes. Not counting the miscellaneous "le_pipes" and "pings" that are running, there should only be four processes still active as shown in the following example (mnet, mrpg, nds, and rssd). Some tasks such as cm_uconx and p_server could take up to 45 seconds to gracefully stop, so repeat this step several times up to 1 minute following the commanded stop. At that point, if other processes are still running, repeat steps 1 and 2. If there are still remaining active processes other than the four listed in the example and the miscellaneous le_pipes/pings, then continue with step 3 to stop the renegade process(es). It is not mandatory to "kill" the RPG HCI; however, proceed to step 4 to clear it from the display if desired.

EXAMPLE:

```
27 rpg1−osf1 /export/home/v1.81 :rpg_ps
RPG: Shutdown state − Active − In Operational Mode
     name     tskid  inst pid    cpu    mem   life  command
   le_pipe 11004    12961  2030m   49k   18h le_pipe −t mnet_in
   le_pipe 11004    12968   230m   49k   18h le_pipe −t mnet_in
   le_pipe 11004    12958   160m   49k   18h le_pipe −t mnet_in
   le_pipe 11004    12965  6550m   49k   18h le_pipe −t mnet_in
   le_pipe 11004    12971   170m   49k   18h le_pipe −t mnet_in
      mnet  11002    12949     14s 270k   18h mnet −c /export/home/v1.99/
.rssd.conf −w 120
      mrpg  11101    29915   110m  606k  10s mrpg shutdown
       nds  11102    29918    50m   57k   10s nds −v −f /export/home/v1.99data/
infr/nds.lb
      ping  11003    12963    −2m    0B   18h /usr/sbin/ping −I 2 mscf 1
      ping  11003    12957    −2m    0B   18h /usr/sbin/ping −I 2 bdds 1
      ping  11003    12960    −2m    0B   18h /usr/sbin/ping −I 2 lan 1
      ping  11003    12967    −2m    0B   18h /usr/sbin/ping −I 2 rtr 1
      ping  11003    12970    −2m    0B   18h /usr/sbin/ping −I 1 rpg 1
      rssd  10006    12948     16s  214k  18h rssd −c /export/
home/v1.99/.rssd.conf −f 256 −l /export/home/v1.99/rssd.log
```

Table 4–41. Stopping the RPG Applications Software – Continued

STEP	ACTION/PROCEDURE	RESPONSE/COMMENTS
3	At a normal user prompt, enter: **kill –9** *nnn*<**CR**>	Where *nnn* is the PID (”inst pid”) number of the process to stop. Repeat steps 2 and 3 as necessary until there are no active processes other than those listed in the example. It is not mandatory to “kill” the RPG HCI; however, continue with step 4 to clear it from the display if desired.
4	Close the RPG HCI window, if open, by double–clicking the minus sign [–] in the upper left corner of the window.	Closes current RPG HCI. After software is restarted, it will be best to start a new RPG HCI.

4.6.2.2 Starting the RPG Applications Software. In most cases, the RPG applications software can be restarted from the RPG HCI at the MSCF workstation or an HCI running on the RPG workstation in the RPGPCA. In the event that the software can not be started through the graphical interface, the following procedure can be used to start the software from an RPG processor command line. Table 4–42 provides the procedure for bringing the RPG software up in a normal manner. However, if incorrect applications functionality is noted, the RPG should be brought up in a clean start mode as indicated in Table 4–43 (can not be done graphically).

NOTE

These procedures are written based upon being at the RPG workstation in the UD70/170 RPGPCA. If being performed from the MSCF, a telnet session would have to be established to the RPG (two possible RPGs for FAA Redundant)

Table 4–42. Starting the RPG Applications Software (Normal)

STEP	ACTION/PROCEDURE	RESPONSE/COMMENTS

NOTE

Starting with ROC development release version v1.57, the RPG applications software will auto–start immediately after running its configuration script or after a system reboot, as long as it was running prior to the reboot Thus, perform step 1 only if the RPG applications software was manually stopped, or stopped prior to a system reboot.

Table 4–42. Starting the RPG Applications Software (Normal) – Continued

STEP	ACTION/PROCEDURE	RESPONSE/COMMENTS
	NOTE If this is being performed at the RPG workstation in the RPGPCA cabinet and there is a BDDS installed, Raritan user channel 1 (RPG) must be selected. Activate mouse and use the on–screen menus to login as **raritan<CR>** user (no password) or, if a screen saver is not active yet, hit the **<Scroll Lock>** key twice quickly to activate the on–screen menus. Then select the RPG user channel.	
1	At a normal user prompt, enter: **start<CR>**	The "start" alias calls the "mrpg –v start-up" command which starts the RPG applications software. The start process will take approximately 30 seconds to complete. After returned to a prompt, the RPG should be operational.
2	At a normal user prompt, enter: **rpg_ps<CR>**	This will display a list of the active RPG processes. There will be approximately 100 processes listed and none should show a "FAIL" in the "inst pid" column (use scroll bar as necessary to view top of list). If some processes did not start correctly (FAIL indicated) or if incorrect applications functionality is noted, perform the procedure in Table 4–41 to stop the software and then perform the procedure in Table 4–43 to start the software in a clean start mode.
3	If at the RPG Processor maintenance position within the RPGPCA cabinets and an HCI is desired, then, at the normal user prompt in any terminal window, enter: **hci&<CR>** If this was being performed via a telnet session from the MSCF workstation, then start a new RPG HCI at the MSCF workstation by clicking the **RPG HCI** button on the MSCF display window.	This will start the RPG HCI on the RPG maintenance position monitor or the MSCF workstation, as applicable.

Table 4–43. Starting the RPG Applications Software With Clean Start Mode

STEP	ACTION/PROCEDURE	RESPONSE/COMMENTS
	NOTE Starting with development release version v1.57, the RPG applications software will auto–start immediately after running its configuration script within a full system software load procedure or after a system reboot, as long as it was running prior to the reboot Thus, perform step 1 only if the RPG applications software was manually stopped, or stopped prior to a system reboot, and a clean start is necessary to recover possible failed tasks.	
	NOTE If this is being performed at the RPG workstation in the RPGPCA cabinet and there is a BDDS installed, Raritan user channel 1 (RPG) must be selected. Activate mouse and use the on–screen menus to login as **raritan<CR>** user (no password) or, if a screen saver is not active yet, hit the **<Scroll Lock>** key twice quickly to activate the on–screen menus. Then select the RPG user channel.	
	CAUTION A clean start will reinitialize some system logs and product databases. This procedure should only be used when necessary to recover failed tasks or possibly recover from abnormal applications functionality.	
1	At a normal user prompt, enter: **cleanstart<CR>**	The “cleanstart” alias calls the “mrpg –r –v startup” command which starts the RPG applications software. The “–r” option indicates the transient data stores in the RPG will be re–created. This process will take approximately one minute to complete. After returned to a prompt, the RPG should be operational.

Table 4–43. Starting the RPG Applications Software With Clean Start Mode – Continued

STEP	ACTION/PROCEDURE	RESPONSE/COMMENTS
2	At a normal user prompt, enter: **rpg_ps<CR>**	This will display a list of the active RPG processes. There will be approximately 100 processes listed and none should show a "FAIL" in the "inst pid" column (use scroll bar as necessary to view top of list). If all processes are active, then proceed to step 3. If some processes did not start correctly (FAIL indicated) or if incorrect applications functionality is noted, perform a normal system reinitialization of the RPG processor IAW Table 4–78 (if done by a Superuser via a telnet session, an **init 6<CR>** from a # prompt could also be used for the reinitialization). If the reinitialization is performed, after the system boots up, login in as a normal user and then recheck the processes with the rpg_ps command. If problems are still evident, contact the ROC Hotline for further assistance.
3	If at the RPG Processor maintenance position within the RPGPCA cabinets and an HCI is desired, then, at the normal user prompt in any terminal window, enter: **hci&<CR>** If this was being performed via a telnet session from the MSCF workstation, then start a new RPG HCI at the MSCF workstation by clicking the **RPG HCI** button on the MSCF display window.	This will start the RPG HCI on the RPG maintenance position monitor or the MSCF workstation, as applicable.

4.6.2.3 Stopping the MSCF Client Software. At this point, the only two MSCF functionalities that can be stopped are the RPG's HCI (as displayed at the MSCF) and the Simple Network Management Protocol (SNMP) MSCF application. The MSCF application provides buttons to start HCIs for various Open Systems components, an SNMP trap log, as well as power control and added communication monitoring capabilities. In the future, this particular application display will also be used to provide an interface to the Open RDA. See Table 4–44 to stop the RPG HCI (or two HCIs for FAA Redundant). See Table 4–45 for stopping the MSCF application.

Table 4–44. Stopping the RPG's HCI at MSCF

STEP	ACTION/PROCEDURE	RESPONSE/COMMENTS
1	Double–click the [–] in the upper left corner of the RPG HCI window.	The RPG HCI closes. Since this RPG HCI is displayed on this platform through a Remote Support Services Daemon (RSSD), this is all that is required to stop the RPG HCI functionality.

Table 4–45. Stopping the Master System Control Functions Application

STEP	ACTION/PROCEDURE	RESPONSE/COMMENTS
1	Double–click the [–] in the upper left corner of the `Master System Control Functions` window.	The `Master System Control Functions` application window closes.

4.6.2.4 Starting the MSCF Client Software. At this point, the only two MSCF functionalities that can be started are the MSCF application (commonly called the "MSCF display") and the RPG's HCI displayed at the MSCF via a Remote Support Services Daemon. The MSCF application (display) provides buttons to start HCIs for various Open Systems components. It also provides an SNMP trap log, as well as power control and added communication monitoring capabilities. These last functionalities are provided via use of SNMP. In the future, the MSCF display will also be used to provide an interface to the Open RDA. See Table 4–46 for starting the MSCF application. See Table 4–47 to start the RPG HCI (or two HCIs for FAA Redundant).

NOTE

It is normally not necessary to use Table 4–46 or Table 4–47 to start the MSCF display or the RPG's HCI at the MSCF workstation via command line entries. The actual MSCF display should auto–start upon login under the CDE and it has a button that can be used to start the RPG's HCI.

Table 4–46. Starting the Master System Control Functions Application

STEP	ACTION/PROCEDURE	RESPONSE/COMMENTS
1	At a normal user prompt, enter: **mscf &<CR>**	This will call the "mscf" program to start the MSCF display. Starting with ROC software development release version v1.71, the "mscf" program/display will start as soon as a normal user logs into CDE on the MSCF. In the event that the MSCF Display does not auto–start when logging into CDE, or the present "mscf" display dies or becomes corrupted, the "mscf" command can always be used to start a new display.

Table 4–47. Starting the RPG's HCI at MSCF

STEP	ACTION/PROCEDURE	RESPONSE/COMMENTS
1	Click the **RPG HCI** button on the `Master System Control Functions` window to start the appropriate RPG HCI and this procedure is complete. For an FAA redundant system, an RPG HCI can be started for either RPG as selected via a toggle button on the `Master System Control Functions` window.	If the button does not start an RPG HCI, continue with the next step. If the RPG HCI starts as expected, this procedure is complete.
2	If this is an MSCF for a DoD system, then proceed to step 3. If this is an MSCF for an FAA Redundant system, then proceed to step 4. For an NWS system, at the normal user prompt, enter: **nwsmscfhci<CR>**	This is an alias which will call the appropriate binary and start the RPG HCI. This is a high–bandwidth version of the RPG HCI.

Table 4–47. Starting the RPG's HCI at MSCF – Continued

STEP	ACTION/PROCEDURE	RESPONSE/COMMENTS
3	For an MSCF off of a DoD system, at the normal user prompt, enter: **dodmscfhci<CR>**	This is a low bandwidth version of the RPG HCI since the graphics must be passed across a modem link.
4	For FAA Redundant systems, an RPG HCI can be started for each channel. At the normal user prompt, enter: **faamscfhci1<CR>** and at a prompt in another window, enter: **faamscfhci2<CR>**	These are aliases which will call the appropriate binary and has command line parameters necessary to specify the start of an RPG HCI for each specific RPG (Channel 1 and Channel 2). These are low bandwidth versions of the HCI since the graphics must be passed across a modem link. For that reason, it is better to only start an RPG HCI for the Active/Controlling channel.

4.6.2.5 Stopping the BDDS Software. Normally, the user should never need to stop the BDDS software from the command line or through its graphical interface. From the MSCF Display, the "BDDS HCI" can be used to stop the software. However, if the user does need to stop it from the command line, perform the procedures provided in Table 4–48.

NOTE

These procedures are written based upon being at the BDDS workstation in the UD70/170 RPGPCA. If being performed from the MSCF, a telnet session would have to be established to the BDDS.

SU

Table 4–48. Stopping the BDDS Software

STEP	ACTION/PROCEDURE	RESPONSE/COMMENTS

NOTE

If this is being performed at a BDDS workstation (installed in RPGPCA cabinets), Raritan user channel 2 (BDDS) must be selected. Activate mouse and use the on–screen menus to login as **raritan<CR>** user (no password) or, if a screen saver is not active yet, hit the **<Scroll Lock>** key twice quickly to activate the on–screen menus. Then select the BDDS user channel.

Table 4–48. Stopping the BDDS Software – Continued

STEP	ACTION/PROCEDURE	RESPONSE/COMMENTS
1	If not already logged into the CDE, at the CDE Login screen log into the CDE as root by entering: **root<CR>** and the *root_password*<CR>	The BDDS software must be stopped by root. If already logged into CDE as a normal user or performing this procedure through a remote session, this procedure can be continued by becoming a Superuser. If root privileges are not allowed, contact the system administrator for assistance.
2	Open up a terminal window if one is not already open.	Use the CDE Control Panel to open a terminal window.
3	At the # prompt, enter: **cd /bdds<CR>**	This is the normal directory location for the bdds operational software. (Note: There is a */export/home/bdds* user directory. However, it is used only for user login/initial software loads and not the operational software.)
4	At the # prompt, enter: **pwd<CR>**	Should indicate */bdds*
5	At the # prompt, enter: **./wbstop<CR>**	This will stop the BDDS software.
6	At the # prompt, enter: **./wbstat<CR>**	A “BDDS Active Processes” table is displayed; however, three of the four normal active processes (“wbserver”, “convert”, and “brecv”) will not be listed. The process “wbcontrol” will still be listed. This indicates that the server did stop correctly. Broadcast Receive (brecv) is the process that receives the base data from the RPG.

4.6.2.6 Starting the BDDS Software. Normally the user should never have to manually start the BDDS software because it starts by itself at boot time. From the MSCF Display, the “BDDS HCI” can be used to start the software if it is stopped for any reason (not “Active” on the BDDS HCI) . However, if the user does need to start it from the command line at the actual BDDS workstation, perform the procedures provided in Table 4–49.

NOTE

These procedures are written based upon being at the BDDS workstation in the UD70/170 RPGPCA. If being performed from the MSCF, a telnet session would have to be established to the BDDS.

SU

Table 4–49. Starting the BDDS Software

STEP	ACTION/PROCEDURE	RESPONSE/COMMENTS
	NOTE If this is being performed at a BDDS workstation (installed in RPGPCA cabinets), Raritan user channel 2 (BDDS) must be selected. Activate mouse and use the on–screen menus to login as **raritan<CR>** user (no password) or, if a screen saver is not active yet, hit the **<Scroll Lock>** key twice quickly to activate the on–screen menus. Then select the BDDS user channel.	
1	Log into CDE as root.	The BDDS software must be started by root. If already logged into CDE as a normal user or performing this procedure through a remote session, this procedure can be continued by becoming a Superuser. If root privileges are not allowed, contact the system administrator for assistance.
2	At the # prompt, enter: **cd /bdds<CR>**	This is the normal directory location for the bdds operational software. (Note: There is a */export/home/bdds* user directory. However, it is used only for user logins/initial software loads, and not the operational software.)
3	At the # prompt, enter: **pwd<CR>**	Should indicate */bdds*
4	At the # prompt, enter: **./wbstat<CR>**	Verify that the BDDS software is not running. A “BDDS Active Processes” table is displayed; however, three of the four normal active processes (“wbserver”, “convert”, and “brecv”) will not be listed. The process “wbcontrol” will still be listed. This indicates that the server is not running.
5	At the # prompt, enter: **./wbserver<CR>**	This will start the BDDS software.

Table 4–49. Starting the BDDS Software – Continued

STEP	ACTION/PROCEDURE	RESPONSE/COMMENTS
6	At the # prompt, enter: **./wbstat<CR>**	Verify that the BDDS software is running. A "BDDS Active Processes" table is displayed and all four normal active processes ("wbserver", "convert", "brecv", and "wbcontrol") should be listed. This indicates that the server has started correctly.

NOTE

This only starts the BDDS applications software. For the BDDS to actually receive data (brecv) from the RPG, a "bcast" should be running at the RPG. For all sites that have a BDDS system, the RPG software automatically starts the bcast function when the RPG applications level software is started so no further action should be necessary.

4.6.2.7 Stopping the PowerChute Display. Normally, the user does not need to stop the PowerChute display. Unless the system administrator leaves it open, it would not be observed. However, if the user does need to stop it, perform the procedures provided in Table 4–50.

NOTE

This only stops the PowerChute display and this is only applicable at the RPG workstation within the RPGPCA. The actual UPS monitoring software is always running.

Table 4–50. Stopping the PowerChute Display

STEP	ACTION/PROCEDURE	RESPONSE/COMMENTS
	NOTE If this is being performed at the RPG workstation in the RPGPCA cabinet and there is a BDDS installed, Raritan user channel 1 (RPG) must be selected. Activate mouse and use the on–screen menus to login as **raritan<CR>** user (no password) or, if a screen saver is not active yet, hit the **<Scroll Lock>** key twice quickly to activate the on–screen menus. Then select the RPG user channel.	
1	Use the mouse and double–click on the minus sign (–) in the upper left corner of the window.	The PowerChute display closes.

4.6.2.8 Starting the PowerChute Display. The user should never have to actually start the PowerChute UPS monitoring software because it starts by itself at boot time. The procedure in Table 4–51 is only used to start the PowerChute software display. PowerChute software must be started as a Superuser (root).

NOTE

This only starts the PowerChute display and this is only applicable at the RPG workstation within the RPGPCA. The actual UPS monitoring software is normally always running and there is no mandatory requirement to start the PowerChute display. This PowerChute display is an "added–bonus" maintenance tool that can be used for evaluating UPS monitoring logs for power continuity problems. For FAA Redundant systems, the PowerChute display can be started on either RPG workstation to display UPS data for either the Channel 1 or Channel 2 UPS.

SU

Table 4–51. Starting the PowerChute Display

STEP	ACTION/PROCEDURE	RESPONSE/COMMENTS
	NOTE If this is being performed at the RPG workstation in the RPGPCA cabinet and there is a BDDS installed, Raritan user channel 1 (RPG) must be selected. Activate mouse and use the on–screen menus to login as **raritan<CR>** user (no password). Then select the RPG user channel.	
	NOTE This procedure is for starting the graphical PowerChute display. In steps 2 and 6 below, the System Administrator must use a text editor (e.g., "vi") to perform file editing. Since this is a normal System Administration process, no specific details will be given here.	
1	If not already at a root prompt, then at the "*node_name* console login:" prompt, enter: **root<CR>** and then *root_password***<CR>** at the Password: prompt.	The remainder of this procedure must be performed as a Superuser.

Table 4–51. Starting the PowerChute Display – Continued

STEP	ACTION/PROCEDURE	RESPONSE/COMMENTS
2	The System Administrator must use a text editor (e.g., "vi") and remove the "*LK*" indicator from the second delimited field in the /etc/shadow file for the "pwrchute" account line. This unlocks the "pwrchute" account for use. Save the edited file.	This procedure should be performed by the System Administrator and that individual should be familiar with text editing processes.
3	At an # prompt, enter: **/usr/lib/powerchute/xpowerchute & <CR>**	This starts the PowerChute software process for a graphical display.
4	At the `Monitor Server` window, use the mouse to click and highlight the active UPS indicated to be "On Line". Then click **OK**.	Single channel system should only see one active UPS listed. FAA redundant systems will actually see the active UPS for each channel listed and either UPS can be selected and monitored from either channel.
5	At the `Password` window, click **OK**.	The graphical PowerChute display appears.
6	The System Administrator must use a text editor (e.g., "vi") and restore the "*LK*" indicator to the second delimited field in the /etc/shadow file for the "pwrchute" account line. This locks the "pwrchute" account to meet security requirements.	This procedure should be performed by the System Administrator and that individual should be familiar with text editing processes.

4.6.3 SOFTWARE LOADS.

Full system software loads or reloads (e.g., loading the Solaris Operating System) are normally only necessary for new systems or when software is upgraded. In these cases, the software will normally be distributed as part of a formal release procedure with a unique set of procedures. However, in some cases, the user may be required to load or reload the present version of the OS software if a corruption occurs and the user can not recover functionality through a software restoral procedure (paragraph 4.6.5). If the user needs to load or reload the entire operating system, follow the procedure in paragraph 4.6.3.1 and Table 4–52 through Table 4–54. (RPG, BDDS, and MSCF processors). To load the RPG applications software only, follow the procedure in paragraph 4.6.3.2 and Table 4–55. To load the MSCF client applications software only, follow the procedure in paragraph 4.6.3.3 and Table 4–56. To load the BDDS applications software only, follow the procedure in paragraph 4.6.3.4 and Table 4–57. All of these procedures must be performed in Superuser (root) mode. Also, all of these procedures must be performed at the boot console (workstation monitor/keyboard).

Index, Software Loads

Procedure	Reference
RPG Processor Full System Software Load	Table 4–52
BDDS Processor Full System Software Load	Table 4–53
MSCF Processor Full System Software Load	Table 4–54
Load of New RPG Applications Software	Table 4–55
Load of New MSCF Applications Software	Table 4–56
Load of New BDDS Applications Software	Table 4–57

4.6.3.1 Full System Software Installations. This paragraph contains procedures for a full system software load on the RPG processor, the BDDS processor, and the MSCF processor.

4.6.3.1.1 RPG Processor UD70A7 Full System Software Installation. Table 4–52 contains the procedures for performing a full system software load of the RPG Processor (UD70A7). This is a full installation and if previous data does exist, it will not be retained. This procedure assumes the user is starting with a completely "blank" system or the user desires to perform the full installation procedure because present data corruption may exist or a new software build was received. If the user wants to back up present user accounts, Table 4–52 provides the necessary references for performing this backup and restoring the user accounts after the full system software load is completed.

All of these procedures must be performed in Superuser (root) mode. Also, all of these procedures must be performed at the boot console (i.e., the maintenance console in the RPG cabinets) and not from a remote network session.

NOTE

If the following full system software load is aborted on the RPG for any reason, all user accounts will be lost. Do not intentionally abort the load. If the load aborts for any reason, reestablish all user accounts IAW Table 4–83 after the full software load is successfully completed. Table 4–83 has the necessary steps to also relink user accounts to the RPG applications software so that all users can access the RPG applications. If this is a new replacement processor or fixed disk, user accounts must also be reestablished after the load IAW Table 4–83.

SU

Table 4–52. RPG Processor UD70A7 Full System Software Load

STEP	ACTION/PROCEDURE	RESPONSE/COMMENTS
	NOTE If this is being performed at the RPG workstation in the RPGPCA cabinet and there is a BDDS installed, Raritan user channel 1 (RPG) must be selected. Activate mouse and use the on–screen menus to login as **raritan<CR>** user (no password) or, if a screen saver is not active yet, hit the **<Scroll Lock>** key twice quickly to activate the on–screen menus. Then select the RPG user channel.	
1	If this is a previously loaded system and there is a need to retain current user account data, then backup the account directories prior to starting this procedure. This backup can be done by following the procedure listed in Table 4–62. Only perform this backup if there is a real need to retain user account data.	Backup current user account directories if desired. The full system load script will automatically backup user IDs and passwords should backup data from these account directories be restored later. The system full load script will also create new home directories for all users with the current environment file (.cshrc) in–place so backup/restoral of user account data is not mandatory.
2	If the system is powered off, skip to step 6. If the system is a “blank” or corrupted system, it will automatically stop or be at the `ok` (boot) prompt (skip to step 7). Otherwise, continue with the next step.	Even though new systems come with Solaris pre–loaded, software is reloaded to establish specific disk partition sizes. This full load procedure will accomplish that task and load all software on the disk. If an “ok” prompt is presently displayed, proceed to step 7. If the system is powered on and not presently at an “ok” prompt, continue with the next step.
	NOTE Steps 3 through 5 contain methods to halt a system in a normal manner. If accomplishing these steps does not halt the system, press the Standby button on the front of the Ultra 5/10 processor assembly (located below the green power LED) and wait 80 seconds. If the system still doesn’t shutdown, use the power switch at the rear of the unit to power the processor off for five seconds and then to power it back on. Enter **<Stop> A** to halt the boot process. Then proceed to step 7.	

Table 4–52. RPG Processor UD70A7 Full System Software Load – Continued

STEP	ACTION/PROCEDURE	RESPONSE/COMMENTS
3	If at a CDE Login screen (see Figure 4–9 for example) or within the CDE with an active Screen Lock, then proceed to step 5. If within the CDE and the screen can be unlocked, continue with the next step.	Applications software may still be running at this point; however, it is not relevant since all system software is being reloaded.
4	Exit out of CDE by clicking **EXIT** on the CDE Control Panel and **OK** at the acknowledgement window.	Leave the CDE.
5	Push the power button on the front of the RPG Processor.	No immediate response for approximately 50 seconds, then another 20 seconds to complete the shutdown. Halts the system and system goes to an "ok" prompt. Proceed to step 7.
6	If the system was powered off, then power the system on, and enter **Stop–A** (i.e., simultaneously press the "Stop" and "A" keys) when the system starts to boot.	An "ok" prompt will appear.
7	Place the system software distribution disk labeled RPG LOAD MEDIA Version X.X in the CD–ROM drive and close the cradle door.	Version X.X is the current software version fielded.
8	At the ok prompt, enter: **set–defaults<CR>**	This ensures all NVRAM settings are returned to default values.
9	At the ok prompt, enter: **boot cdrom<CR>**	This boots the CD–ROM disk. Some disk check errors may be noted; however, they are not relevant at this point. Disregard the "hsfs mount failed, trying ufs ..." message.

Table 4–52. RPG Processor UD70A7 Full System Software Load – Continued

STEP	ACTION/PROCEDURE	RESPONSE/COMMENTS
	NOTE Steps 10 through 12, 14 through 18, 20, and 21 each address a system load query/prompt and are divided into two parts. The first part of the step provides the query/prompt information and default information (if any) in the RESPONSE/COMMENTS column. The second part of the step provides the specific action/procedure required. During the next two steps, if an incorrect entry is made, enter **<Ctrl> C** and start over at the load menu. **NOTE** If the load starts and it is then realized that an incorrect entry was made, let the software complete its load and then start this procedure over from the beginning. If the load is aborted while in progress, all user accounts will be lost.	

10	`Choose System Type to Load:`
	`  1  RPG`
	`  2  MSCF`
	`  3  BDDS`
	`  4  Utilities`
	
	`Enter Numeric Selection from Above,`
	`q to Quit or ? for Help:`
	`[?,??,q]:`	

	Enter: **1<CR>**	Indicates "`Installing RPG System...`".
11	`Please enter the radar's site call letters (type 'help' for list):`	

Table 4–52. RPG Processor UD70A7 Full System Software Load – Continued

STEP	ACTION/PROCEDURE	RESPONSE/COMMENTS

11 Cont.	Enter the appropriate four letter site mnemonic and press **<CR>**. Enter **help<CR>** to see a list of site mnemonics if it is unclear about which mnemonic to use.	System responds with the system type, network number, and netmask. For example:
		`System Type is: RPG`
		`Network is: 172.25.171.0`
		`Subnet Mask is: 255.255.255.128`
		
		If this is not an FAA Redundant system the installation will start and it will take approximately 35 minutes to complete. Proceed to step 13. If this is an FAA Redundant system, continue with the next step.

12	`Is this channel 1 or 2?`	
	Enter either **1<CR>** or **2<CR>**	The installation will start and it will take approximately 35 minutes to complete.
13	While the software is loading, cycle the power switch off for five seconds and then back on at the rear of all three communication servers (UD70/170A15, A16, and A17).	This is necessary to allow for the communication servers to upload new internal operating software if it changed on the RPG processor as part of the new software load. The upload will not actually occur until the RPG processor itself is booted in subsequent steps (but still before the RPG applications software starts).

14	`Do you want to restore an adaptation archive from CD or floppy for` *SITE_NAME*`?`
	
	`Yes or No [y,n,?,q]`
		SITE_NAME `is the site being loaded at the time (site mnemonic).`

	Enter: **y<CR>** if adaptation floppy is available **n<CR>** if adaptation floppy is not available	If “n” is entered, proceed to step 18.

15	`Choose the adaptation archive media to restore from:`
	
	`1 Floppy`
	`2 CD (current install CD)`
	
	`Enter Numeric Selection from Above, q to Quit or ? for Help: [?,??,q]:`
		At this time, adaptation data can only be restored from a floppy.

Table 4–52. RPG Processor UD70A7 Full System Software Load – Continued

STEP	ACTION/PROCEDURE	RESPONSE/COMMENTS
15 Cont.	Enter: **1<CR>**	Floppy selected.

16	`Is the floppy in the drive and ready?`
	
	`Yes or No [y,n,?,q]`
		Ensure adaptation floppy is in the drive.

	Insert the adaptation floppy in the floppy drive and then enter: **y<CR>**	System starts to mount floppy.

17	`Trying to mount floppy...`
	
	`Choose the adaptation file to restore:`
	
	`1 ./adapt00001.`*site_specific_info*
	`2 ./adapt00001.`*site_specific_info*
	`3 "`
	`4 "`
	`5 etc.`
	
	`Enter Numeric Selection from Above, q to Quit or ? for Help: [?,??,q]:`
		The *site_specific_info* will consist of the site name and the date/time when the adaptation data file was created. Unless directed otherwise, always select the latest backup from the list.

	Enter: **#<CR>**	Where "#" is the desired number from the list.

NOTE

System time should be checked/set to ensure accurate system operation. Steps 18 and 19 provide guidance for performing this action prior to system reboot.

Table 4–52. RPG Processor UD70A7 Full System Software Load – Continued

STEP	ACTION/PROCEDURE	RESPONSE/COMMENTS

18	`Adaptation data successfully retrieved from media`
	
	`RPG Installation Done!`
	
	`Please [q]uit menu to reboot.`
	
	`Choose System Type to Load:`
	`1 RPG`
	`2 MSCF`
	`3 BDDS`
	`4 Utilities`
	
	`Enter Numeric Selection from Above,q to Quit or ? for Help: [?,??,q]:`
		If “n” was entered in step 14, the system will actually indicate that the adaptation data restoral was skipped.

	Enter: **4<CR>** to go into the Utilities Menu, then enter **1<CR>** to get to a shell prompt.	
19	Verify the displayed date/time appears accurate within one minute. At the # prompt, enter **date<CR>** to redisplay a new date/time. If necessary, set the date/time (GMT) using the procedure in Table 4–77 starting at step 3. When completed, enter **exit<CR>** to return to the main load menu.	Allows check/set of system time prior to reboot.

20	`Choose System Type to Load:`
	`1 RPG`
	`2 MSCF`
	`3 BDDS`
	`4 Utilities`
	
	`Enter Numeric Selection from Above,`
	`q to Quit or ? for Help: [?,??,q]:`	

Table 4−52. RPG Processor UD70A7 Full System Software Load − Continued

STEP	ACTION/PROCEDURE	RESPONSE/COMMENTS
	Enter: **q<CR>**	This will allow selection of a system reboot.
21	Enter **y<CR>**.	Menu will temporarily pop back up and then system reboots. On the first boot, a disk−type error may be noted on a non−existent disk (e.g., "/dev/dsk/c1t4d0s0"); however, this error is non−critical and will not occur on subsequent boots.

NOTE

The RPG is now fully functional and applications are loaded/started. No further interaction is required for the RPG to actually perform its prime functions. The remaining steps are for setting the root password and restoring user accounts if desired.

22	At the CDE Login screen, click and hold **Options** then select **Command Line Login**.	Will enable login as root outside of the CDE.
23	Enter a **<CR>**.	Necessary to get to a Command Line Login prompt.
24	At the "*node_name* console login:" prompt, enter: **root<CR>**	At this point, the system will not prompt for a root password because it is not set at this time.
25	At the # prompt, enter: **eject cdrom<CR>**. Remove the RPG LOAD MEDIA Version X.X CD and close cradle. Also, manually eject the adaptation data floppy if it was used.	CD−ROM cradle opens. Store the RPG LOAD MEDIA Version X.X CD and adaptation data floppy, if used, in a safe location.
26	At the # prompt, enter: **passwd<CR>**	The system prompts the user to enter a new password.
27	At the `New password:` prompt, enter the desired *root_password***<CR>**.	The system prompts the user to re−enter the new password.
28	At the `Re−enter new password:` prompt, re−enter the desired *root_password***<CR>**.	Should indicate that the password was successfully changed for root.

Table 4–52. RPG Processor UD70A7 Full System Software Load – Continued

STEP	ACTION/PROCEDURE	RESPONSE/COMMENTS
29	Open the CD–ROM drive at the RPG. Place the CD–ROM labeled RPG EPSS Files . . . Use with RPG Build X.X into the CD–ROM drive. Close the cradle.	Use the latest RPG EPSS Files CD provided with the last software build.
30	At the # prompt, enter: **cd /usr/local/bin<CR>**	Changes to the directory where local executables are stored.
31	At the # prompt, enter: **./install_epss.ksh<CR>**	Starts the script to install the EPSS.

32	When the following message appears:
	
	`This script loads the EPSS. Please put the EPSS CD in the CD drive now. Do you want to install EPSS on this system's hard drive?`
	`Yes or No [y, n, ?, q]`
	
	Enter:
	y<CR>
		Installs the EPSS to provide on–line operator help screens. The EPSS icon (of a RDA tower and shelter with a question mark) will be placed on the left side of the Control Panel on the next login as a normal user.
		
		This should take approximately 2 minutes. When the EPSS installation is complete, the # prompt appears.

33	At the # prompt, enter: **eject cdrom<CR>**	CD–ROM cradle opens.
34	Remove the CD–ROM. Close the cradle.	Store the RPG EPSS Files . . . Use with RPG Build X.X CD in a safe location.
35	At the # prompt, enter: **exit<CR>**	System returns to the CDE `Login Confirmation` window after approximately 30 seconds.
36	At the RPG processor, when a CDE Login Screen is present, login as a regular site user. `Console` and `Terminal` windows should appear. If a `Terminal` window does not appear, open one.	To open a `Terminal` window, right click on an open screen, select Tools, and then select Terminal.
37	Open the CD–ROM drive at the RPG. Place the CD–ROM labeled RPG Blockage FIles . . . Use with RPG Build X.X into the CD–ROM drive. Close the cradle.	Use the latest RPG Blockage FIles CD provided with the last software build.

Table 4–52. RPG Processor UD70A7 Full System Software Load – Continued

STEP	ACTION/PROCEDURE	RESPONSE/COMMENTS
38	Wait for approximately 30 seconds for the `File Manager...` window to appear. Close this `File Manager` window by clicking in the upper left hand corner on **File** and **Close.**	This is done to unlock the keyboard.
39	Click in the Terminal window. At the `user:` prompt, enter: **cd /cdrom/cdromØ<CR>** A `cdrom0:` prompt appears.	Changes the prompt to cdrom directory.

NOTE

If a warning message is displayed indicating permissions problems, cancel the install process by entering **<Ctrl>C**. Enter **cd<CR>** to return to the `V1.XX` directory.

40	At the `cdrom0:` prompt, enter:
	./install_tbd<CR>
		When completed, the following message appears:
		`"Finished! Installed the Terrain Blockage Data.`
		`Restart RPG Software for Data to take effect."`

41	At the `cdrom0:` prompt, enter: **cd<CR>**	Changes the prompt to `V1.XX` directory. The `V1.XX` directory is the version number of the software build. It should read something like `V1.3` or `V1.12.`
42	At the `V1.XX:` prompt, enter: **eject cdrom<CR>** CD–ROM cradle opens.	If a "Device busy" response appears, call the ROC Hotline for recovery assistance.
43	Remove the CD–ROM. Close the cradle.	Store the RPG Blockage Files . . . Use with RPG Build X.X CD in a safe location.
44	At the `V1.XX:` prompt, enter: **mrpg shutdown<CR>**	Shuts down the RPG. This should take approximately 10 minutes. When the following message appears: `RPG processes are notified to shutdown.` It will be followed by the `V1.XX:` prompt.

Table 4–52. RPG Processor UD70A7 Full System Software Load – Continued		
STEP	ACTION/PROCEDURE	RESPONSE/COMMENTS
45	At the `V1.XX:` prompt, enter: **mrpg startup<CR>**	This starts up the RPG. When the following message appears: `RPG startup completed` It will be followed by the `V1.XX:` prompt.
46	At the `V1.XX:` prompt, enter: **hci &<CR>**	This opens an RPG HCI window. The RPG is now operational.

NOTE

Starting with ROC development version v1.86, the applications account can not be accessed directly. Login as a normal user to access the applications software.

Starting with ROC development version v1.116, all normal user accounts have been set up with a default CDE "look" which includes one console window, one terminal window, and one digital clock. Due to variances in monitor sizes and types, the user may need to rearrange these items on the desktop as desired for best viewing. When arranged as desired, then log out of CDE to save the new desktop "look".

47	If this was a previously loaded system and it is necessary to restore user account data which was backed–up prior to starting this procedure, then follow the procedure listed in Table 4–68.	Restores backed–up user account data if desired. Since user IDs and passwords were retained and restored as part of the software load and new user account home directories are also created, it is not necessary to recreate these user accounts after the load. All user accounts should be fully functional after the load. The restoral procedure is just for restoring previous user–specific data if desired.

NOTE

If the full system software load was aborted on the RPG for any reason, all user accounts are lost. To correct this problem, reestablish all user accounts IAW Table 4–83 after the full software load is successfully completed. If this is a new replacement processor or fixed disk, user accounts must also be reestablished after the load IAW Table 4–83.

4.6.3.1.2 BDDS Processor UD70A1 Full System Software Installation. Table 4–53 contains the procedures for performing a full system software load of the BDDS Processor (UD70A1). This is a full installation and if previous data did exist, it will not be retained. This procedure assumes the

user is starting with a completely "blank" system or the user desires to perform the full installation procedure because present data corruption may exist or a new software build was received. If the user wants to back up present user accounts, Table 4–53 provides the necessary references for performing this backup and restoring the user accounts after the full system software load is completed.

All of these procedures must be performed in Superuser (root) mode. Also, all of these procedures must be performed at the boot console and not from a remote network session.

NOTE

If the following full system software load is aborted on the BDDS for any reason, all user accounts will be lost. Do not intentionally abort the load. If the load aborts for any reason, reestablish all user accounts IAW Table 4–83 after the full software load is successfully completed. If this is a new replacement processor or fixed disk, user accounts must also be reestablished after the load IAW Table 4–83.

SU

Table 4–53. BDDS Processor UD70A1 Full System Software Load

STEP	ACTION/PROCEDURE	RESPONSE/COMMENTS
	NOTE If this is being performed at the BDDS workstation (installed in the RPGPCA cabinet), Raritan user channel 2 (BDDS) must be selected. Activate mouse and use the on–screen menus to login as **raritan<CR>** user (no password) or, if a screen saver is not active yet, hit the **<Scroll Lock>** key twice quickly to activate the on–screen menus. Then select the BDDS user channel.	
1	If this is a previously loaded system and there is a need to retain current user account data, then backup the account directories prior to starting this procedure. This backup can be done by following the procedure listed in Table 4–61. Only perform this backup if there is a real need to retain user account data.	Backup current user account directories if desired. The full system load script will automatically backup user IDs and passwords should backup data from these account directories be restored later. The system full load script will also create new home directories for all users with the current environment file (.cshrc) in–place so backup/restoral of user account data is not mandatory.

Table 4–53. BDDS Processor UD70A1 Full System Software Load – Continued

STEP	ACTION/PROCEDURE	RESPONSE/COMMENTS
2	If the system is powered off, skip to step 6. If the system is a "blank" or corrupted system, it will automatically stop or be at the `ok` (boot) prompt (skip to step 7). Otherwise, continue with the next step.	Even though new systems come with Solaris pre–loaded, software is reloaded to establish specific disk partition sizes. This full load procedure will accomplish that task and load all software on the disk. If presently at an "ok" prompt, proceed to step 7. If the system is powered but it is not presently at an "ok" prompt, continue with the next step.

NOTE

Steps 3 through 5 contain methods to halt a system in a normal manner. If accomplishing these steps does not halt the system, press the Standby button on the front of the Ultra 5/10 processor assembly (located below the green power LED) and wait 80 seconds. If the system still doesn't shutdown, use the power switch at the rear of the unit to power the processor off for five seconds and then to power it back on. Enter **<Stop> A** to halt the boot process. Then proceed to step 7.

3	If at a CDE Login screen (see Figure 4–9 for example) or within the CDE with an active Screen Lock, then proceed to step 5. If within the CDE and the screen can be unlocked, continue with the next step.	
4	Exit out of CDE by clicking **EXIT** on the CDE Control Panel and **OK** at the acknowledgement window.	Leave the CDE.
5	Push the power button on the front of the BDDS Processor.	Takes approximately 20 seconds to complete the shutdown. Halts the system and the system goes to an "`ok`" prompt. Proceed to step 7.
6	If the system was powered off, then power the system on, and enter **Stop–A** (i.e., simultaneously press the "Stop" and "A" keys) when the system starts to boot.	An "`ok`" prompt will appear.
7	Place the system software distribution disk labeled RPG LOAD MEDIA Version X.X in the CD–ROM drive and close cradle door.	Version X.X is the current software version fielded.

Table 4–53. BDDS Processor UD70A1 Full System Software Load – Continued

STEP	ACTION/PROCEDURE	RESPONSE/COMMENTS
8	At the `ok` prompt, enter: **set–defaults<CR>**	This ensures all NVRAM settings are returned to default values.
9	At the `ok` prompt, enter: **boot cdrom<CR>**	This boots the CD–ROM disk. Some disk check errors may be noted; however, they are not relevant at this point. Disregard the `"hsfs mount failed, trying ufs ..."` message.

NOTE

Steps 10 through 12, 14, and 15 each address a system load query/prompt and are divided into two parts. The first part of the step provides the query/prompt information and default information (if any) in the RESPONSE/COMMENTS column. The second part of the step provides the specific action/procedure required. During the next step, if an incorrect entry is made, enter **<Ctrl> C** and start over at the load menu.

NOTE

If the load starts and it is then realized that an incorrect entry was made, let the software complete its load and then start this procedure over from the beginning. If the load is aborted while in progress, all user accounts will be lost.

10	`Choose System Type to Load:`
	`1 RPG`
	`2 MSCF`
	`3 BDDS`
	`4 Utilities`
	
	`Enter Numeric Selection from Above,`
	`q to Quit or ? for Help:`
	`[?,??,q]:`	

	Enter: **3<CR>**	Indicates `"Installing BDDS System..."`.
11	`Please enter the radar's site call letters (type 'help' for list):`	

Table 4–53. BDDS Processor UD70A1 Full System Software Load – Continued

STEP	ACTION/PROCEDURE	RESPONSE/COMMENTS

11 Cont.	Enter the appropriate four letter site mnemonic and press **<CR>**. Enter **help<CR>** to see a list of site mnemonics if it is unclear about which mnemonic to use.	System responds with the system type, network number, and netmask. For example:
		`System Type is: BDDS`
		`Network is: 172.25.171.0`
		`Subnet Mask is: 255.255.255.128`
		The installation will start and it will take approximately 30 minutes to complete.

NOTE

System time should be checked/set to ensure accurate system operation. Steps 12 and 13 provide guidance for performing this action prior to system reboot.

12	`BDDS Installation Done!`
	`Please [q]uit menu to reboot.`
	
	`Choose System Type to Load:`
	`1 RPG`
	`2 MSCF`
	`3 BDDS`
	`4 Utilities`
	
	`Enter Numeric Selection from Above,`
	`q to Quit or ? for Help:`
	`[?,??,q]:`	

	Enter: **4<CR>** to go into the Utilities Menu, then enter **1<CR>** to get to a shell prompt.	
13	Verify the displayed date/time appears accurate within one minute. At the # prompt, enter **date<CR>** to redisplay a new date/time. If necessary, set the date/time (GMT) using the procedure in Table 4–77 starting at step 3. When completed, enter **exit<CR>** to return to the main load menu.	Allows check/set of system time prior to reboot.

Table 4–53. BDDS Processor UD70A1 Full System Software Load – Continued

STEP	ACTION/PROCEDURE	RESPONSE/COMMENTS

14	`Choose System Type to Load:`
	`1 RPG`
	`2 MSCF`
	`3 BDDS`
	`4 Utilities`
	
	`Enter Numeric Selection from Above,`
	`q to Quit or ? for Help:`
	`[?,??,q]:`	

	Enter: **q<CR>**	This will allow selection of a system reboot.
15	`Do you want to reboot the system?`	
	Enter **y<CR>**.	Menu will temporarily pop back up and then system reboots. On the first boot, a disk–type error may be noted on a non–existent disk (e.g., "/dev/dsk/c1t4d0s0"); however, this error is non–critical and will not occur on subsequent boots.

NOTE

The BDDS is now fully functional and applications are loaded/started. No further interaction is required for the BDDS to actually perform its prime function. The remaining steps are for setting the root password and restoring user accounts if desired.

16	At the CDE Login screen, click and hold **Options** then select **Command Line Login**.	Will enable login as root outside of the CDE.
17	Enter a **<CR>**.	Necessary to get to a Command Line Login prompt.
18	At the "*node_name* console login:" prompt, enter: **root<CR>**	At this point, the system will not prompt for a root password because it is not set at this time.
19	At the # prompt, enter: **eject cdrom<CR>** Remove the RPG LOAD MEDIA Version X.X CD and close cradle.	CD–ROM cradle opens. Store the RPG LOAD MEDIA Version X.X CD in a safe location.

Table 4–53. BDDS Processor UD70A1 Full System Software Load – Continued

STEP	ACTION/PROCEDURE	RESPONSE/COMMENTS
20	At the # prompt, enter: **passwd<CR>**	The system prompts the user to enter a new password.
21	At the `New password:` prompt, enter the desired *root_password***<CR>**.	The system prompts the user to re–enter the new password.
22	At the `Re-enter new password:` prompt, re–enter the desired *root_password***<CR>**	Should indicate that the password was successfully changed for root.
23	At the # prompt, enter: **exit<CR>**	System returns to the CDE Login screen after approximately 30 seconds. If it is not necessary to restore any backed–up user accounts (data only), then this procedure is theoretically complete; however, the following Note provides information for setting up the CDE "look" when logging into a normal user account and into the CDE. If it is necessary to restore user accounts (data only), continue with the final step.

NOTE

Starting with ROC development version v1.86, the applications account can not be accessed directly. Login as a normal user to access the applications software.

Starting with ROC development version v1.116, all normal user accounts have been set up with a default CDE "look" which includes one console window, one terminal window, and one digital clock. Due to variances in monitor sizes and types, the user may need to rearrange these items on the desktop as desired for best viewing. When arranged as desired, then log out of CDE to save the new desktop "look".

24	If this was a previously loaded system and it is necessary to restore user account data which was backed–up prior to starting this procedure, then follow the procedure listed in Table 4–69.	Restores backed–up user account data if desired. Since user IDs and passwords were retained and restored as part of the software load and new user account home directories are also created, it is not necessary to recreate these user accounts after the load. All user accounts should be fully functional after the load. The restoral procedure is just for restoring previous user–specific data if desired.

NOTE

If the full system software load was aborted on the BDDS for any reason, all user accounts are lost. To correct this problem, reestablish all user accounts IAW Table 4–83 after the full software load is successfully completed. If this is a new replacement processor or fixed disk, user accounts must also be reestablished after the load IAW Table 4–83.

4.6.3.1.3 MSCF Processor UD71A1 Full System Software Installation. Table 4–54 contains the procedures for performing a full system software load of the MSCF Processor (UD71A1). This is a full installation and if previous data did exist, it will not be retained. This procedure assumes the user is starting with a completely "blank" system or the user desires to perform the full installation procedure because present data corruption may exist or a new software build was received. If the user wants to back up present user accounts, Table 4–54 provides the necessary references for performing this backup and restoring the user accounts after the full system software load is completed.

All of these procedures must be performed in Superuser (root) mode. Also, all of these procedures must be performed at the boot console and not from a remote session.

NOTE

If the following full system software load is aborted on the MSCF for any reason, all user accounts will be lost. Do not intentionally abort the load. If the load aborts for any reason, reestablish all user accounts IAW Table 4–83 after the full software load is successfully completed. Table 4–83 has the necessary steps to also relink user accounts to the MSCF applications software so that all users can access the MSCF applications. If this is a new replacement processor or fixed disk, user accounts must also be reestablished after the load IAW Table 4–83.

SU

Table 4–54. MSCF Processor UD71A2A1 Full System Software Load

STEP	ACTION/PROCEDURE	RESPONSE/COMMENTS
1	If this is a previously loaded system and there is a need to retain current user account data, then backup the account directories prior to starting this procedure. This backup can be done by following the procedure listed in Table 4–62. Only perform this backup if there is a real need to retain user account data.	Backup current user account directories if desired. The full system load script will automatically backup user IDs and passwords should backup data from these account directories be restored later. The system full load script will also create new home directories for all users with the current environment file (.cshrc) in–place so backup/restoral of user account data is not mandatory.
2	If the system is powered off, skip to step 6. If the system is a "blank" or corrupted system, it will automatically stop or be at the `ok` (boot) prompt (skip to step 7). Otherwise, continue with the next step.	Even though new systems come with Solaris pre–loaded, software is reloaded to establish specific disk partition sizes. This full load procedure will accomplish that task and load all software on the disk. If the system is presently at an "ok" prompt, proceed to step 7. If the system is powered but not presently at an "ok" prompt, continue with the next step.

NOTE

Steps 3 through 5 contain methods to halt a system in a normal manner. If accomplishing these steps does not halt the system, press the Standby button on the front of the Ultra 5/10 processor assembly (located below the green power LED) and wait 80 seconds. If the system still doesn't shutdown, use the power switch at the rear of the unit to power the processor off for five seconds and then to power it back on. Enter **<Stop> A** to halt the boot process. Then proceed to step 7.

3	If at a CDE Login screen (see Figure 4–9 for example) or within the CDE with an active Screen Lock, then proceed to step 5. If within the CDE and the screen can be unlocked, continue with the next step.	
4	Exit out of CDE by clicking **EXIT** on the CDE Control Panel and **OK** at the acknowledgement window.	Leave the CDE.

Table 4–54. MSCF Processor UD71A2A1 Full System Software Load – Continued

STEP	ACTION/PROCEDURE	RESPONSE/COMMENTS
5	Push the power button on the front of the MSCF Processor.	Takes approximately 20 seconds to complete the shutdown. Halts the system and the system goes to an "`ok`" prompt. Proceed to step 7.
6	If the system was powered off, then power the system on, and enter **Stop–A** (i.e., simultaneously press the "Stop" and "A" keys) when the system starts to boot.	An "`ok`" prompt will appear.
7	Place the system software distribution disk labeled RPG LOAD MEDIA Version X.X in the CD–ROM drive and close the cradle door.	Version X.X is the current software version fielded.
8	At the `ok` prompt, enter: **set–defaults<CR>**	This ensures all NVRAM settings are returned to default values.
9	At the `ok` prompt, enter: **boot cdrom<CR>**	This boots the CD–ROM disk. Some disk check errors may be noted; however, they are not relevant at this point. Disregard the "`hsfs mount failed, trying ufs ...`" message.

NOTE

Steps 10 through 18, 20 and 21 each address a system load query/prompt and are divided into two parts. The first part of the step provides the query/prompt information and default information (if any) in the RESPONSE/COMMENTS column. The second part of the step provides the specific action/procedure required. During the next two steps, if an incorrect entry is made, enter **<Ctrl> C** and start over at the load menu.

NOTE

If the load starts and it is then realized that an incorrect entry was made, let the software complete its load and then start this procedure over from the beginning. If the load is aborted while in progress, all user accounts will be lost.

Table 4–54. MSCF Processor UD71A2A1 Full System Software Load – Continued

STEP	ACTION/PROCEDURE	RESPONSE/COMMENTS

10	`Choose System Type to Load:`
	`1 RPG`
	`2 MSCF`
	`3 BDDS`
	`4 Utilities`
	
	`Enter Numeric Selection from Above,`
	`q to Quit or ? for Help:`
	`[?,??,q]:`	

	Enter: **2<CR>**	Indicates "`Installing MSCF System...`".

11	`A Distant MSCF connects to a DoD or FAA site. Is this a Distant MSCF?`
	
	`Yes or No [y,n,?,q]`	

	Enter either **y<CR>** or **n<CR**	Enter "n" for an MSCF off of an NWS system. Otherwise, enter "y".
		If you answered yes and are a Distant MSCF, it will respond with the question in the following step.
12	`Does this Distant MSCF have Frame Relay configured?`	
	Enter either **y<CR>** or **n<CR>**	Enter "y" if you have the Frame Relay Hub Router UD75 installed. Otherwise, enter "n".
13	`Please enter the radar's site call letters (type 'help' for list):`	

Table 4–54. MSCF Processor UD71A2A1 Full System Software Load – Continued

STEP	ACTION/PROCEDURE	RESPONSE/COMMENTS

13 Cont.	Enter the appropriate four letter site mnemonic and press **<CR>**. Enter **help<CR>** to see a list of site mnemonics if it is unclear about which mnemonic to use.	System responds with the system type, network number, and netmask. For example:
		`System Type is: MSCF`
		`Network is: 172.25.171.0`
		`Subnet Mask is: 255.255.255.128`
		
		The installation will start and it will take approximately 35 minutes to complete.

14	`Do you want to restore an adaptation archive from CD or floppy for` *SITE_NAME*`?`
	
	`Yes or No [y,n,?,q]`
		SITE_NAME `is the site being loaded at the time (site mnemonic).`

	Enter: **y<CR>** if adaptation floppy is available **n<CR>** if adaptation floppy is not available	If “n” is entered, proceed to step 18.

15	`Choose the adaptation archive media to restore from:`
	
	`1 Floppy`
	`2 CD (current install CD)`
	
	`Enter Numeric Selection from Above, q to Quit or ? for Help: [?,??,q]:`
		At this time, adaptation data can only be restored from a floppy.

	Insert the adaptation floppy in the floppy drive and then enter: **1<CR>**	Floppy selected.

16	`Is the floppy in the drive and ready?`
	
	`Yes or No [y,n,?,q]`
		Ensure adaptation floppy is in the drive.

	Insert the adaptation floppy in the floppy drive and then enter: **y<CR>**	System starts to mount floppy.

Table 4–54. MSCF Processor UD71A2A1 Full System Software Load – Continued

STEP	ACTION/PROCEDURE	RESPONSE/COMMENTS

17	`Trying to mount floppy...`
	
	`Choose the adaptation file to restore:`
	
	`1 ./adapt00001.`*site_specific_info*
	`2 ./adapt00001.`*site_specific_info*
	`3 "`
	`4 "`
	`5 etc.`
	
	`Enter Numeric Selection from Above, q to Quit or ? for Help: [?,??,q]:`
		The *site_specific_info* will consist of the site name and the date/time when the adaptation data file was created. Unless directed otherwise, always select the latest backup from the list.

	Enter: **#<CR>**	Where "#" is the desired number from the list.

NOTE

System time should be checked/set to ensure accurate system operation. Steps 18 and 19 provide guidance for performing this action prior to system reboot.

18	`Adaptation data successfully retrieved from media`
	
	`MSCF Installation Done!`
	`Please [q]uit menu to reboot.`
	
	`Choose System Type to Load:`
	`  1  RPG`
	`  2  MSCF`
	`  3  BDDS`
	`  4  Utilities`
	
	`Enter Numeric Selection from Above, q to Quit or ? for Help: [?,??,q]:`
		If "n" was entered in step 14, the system will actually indicate that the adaptation data restoral was skipped.

	Enter: **4<CR>** to go into the Utilities Menu, then enter **1<CR>** to get to a shell prompt.	

Table 4–54. MSCF Processor UD71A2A1 Full System Software Load – Continued

STEP	ACTION/PROCEDURE	RESPONSE/COMMENTS
19	Verify the displayed date/time appears accurate within one minute. At the # prompt, enter **date<CR>** to redisplay a new date/time. If necessary, set the date/time (GMT) using the procedure in Table 4–77 starting at step 3. When completed, enter **exit<CR>** to return to the main load menu.	Allows check/set of system time prior to reboot.

20	`Choose System Type to Load:`
	`  1  RPG`
	`  2  MSCF`
	`  3  BDDS`
	`  4  Utilities`
	
	`Enter Numeric Selection from Above,`
	`q to Quit or ? for Help:`
	`[?,??,q]:`	

	Enter: **q<CR>**	This will allow selection of a system reboot.
21	`Do you want to reboot the system?`	
	Enter **y<CR>**	Menu will temporarily pop back up and then system reboots. On the first boot, a disk–type error may be noted on a non–existent disk (e.g., "/dev/dsk/c1t4d0s0"); however, this error is non–critical and will not occur on subsequent boots.

NOTE

The MSCF is now functional and applications are loaded/started. The remaining steps are for setting the root password and restoring user accounts if desired. Following completion of these procedures, log into CDE to start an MSCF display and an RPG HCI if desired.

22	At the CDE Login screen, click and hold **Options** then select **Command Line Login**.	Will enable login as root outside of the CDE.

Table 4–54. MSCF Processor UD71A2A1 Full System Software Load – Continued

STEP	ACTION/PROCEDURE	RESPONSE/COMMENTS
23	Enter a **<CR>**	Necessary to get to a Command Line Login prompt.
24	At the "*node_name* console login:" prompt, enter: **root<CR>**	At this point, the system will not prompt for a root password because it is not set at this time.
25	At the # prompt, enter: **eject cdrom<CR>**. Remove the RPG LOAD MEDIA Version X.X CD and close cradle. Also, manually eject the adaptation data floppy if it was used.	CD–ROM cradle opens. Store the RPG LOAD MEDIA Version X.X CD and adaptation data floppy, if used, in a safe location.
26	At the # prompt, enter: **passwd<CR>**	The system prompts the user to enter a new password.
27	At the `New password:` prompt, enter the desired *root_password***<CR>**.	The system prompts the user to re–enter the new password.
28	At the `Re-enter new password:` prompt, re–enter the desired *root_password***<CR>**.	Should indicate that the password was successfully changed for root.
29	If an RPG Electronic Performance Support System (EPSS) files CD is available, insert that CD in the CD–ROM drive at this time.	If the EPSS CD is not available, proceed to step 34.
30	At the # prompt, enter: **cd /usr/local/bin<CR>**	Changes to the directory where local executables are stored.
31	At the # prompt, enter: **./install_epss.ksh<CR>**	Starts the script to install the EPSS.
32	At the `Do you want to install EPSS on this system's hard drive?` `Yes or No [y, n, ?,q]` prompt, enter: **y<CR>**	Installs the EPSS to provide on–line operator help screens (takes approximately 2 1/2 minutes). The EPSS icon (of an RDA tower and shelter with a question mark) will be placed on the left side of the Control Panel on the next login as a normal user.
33	At the # prompt, enter: **eject cdrom<CR>** Remove the RPG EPSS Files CD and close cradle. Also, manually eject the adaptation data floppy if it was used.	CD–ROM cradle opens. Store the RPG EPSS Files CD and adaptation data floppy, if used, in a safe location.
34	At the # prompt, enter: **exit<CR>**	System returns to the CDE Login screen after approximately 30 seconds.

Table 4–54. MSCF Processor UD71A2A1 Full System Software Load – Continued

STEP	ACTION/PROCEDURE	RESPONSE/COMMENTS
35	Log into the CDE as a normal user.	When logging into the CDE at the MSCF, an MSCF Display should automatically start and it can be used to start an RPG HCI if desired. If the EPSS CD was loaded, take note of the EPSS icon on the Control Panel. Inform all users that this icon can be used to start the EPSS if needed. See the following NOTE for setting up a default CDE "look" and for customizing Netscape for EPSS viewing.

NOTE

Starting with ROC development version v1.86, the applications account can not be accessed directly. Login as a normal user to access the applications software.

Starting with ROC development version v1.116, all normal user accounts have been set up with a default CDE "look" which includes one console window, one terminal window, and one digital clock. Due to variances in monitor sizes and types, the user may need to rearrange these items on the desktop as desired for best viewing. When arranged as desired, then log out of CDE to save the new desktop "look".

Inform all users that when they start the EPSS with the icon on the Control Panel, they should use Netscape's Edit Preferences option to set both the Fixed and Variable Width fonts to Application (Dt) Size 12. Refer to NWS EHB 6–526 Operations Instructions for specific procedures concerning setup and use of the EPSS.

36	At a normal user prompt within a terminal window, enter: **remote_mscfserver<CR>**	This temporarily starts the Remote MSCF Server application which can later be used to display graphical MSCF windows at a "remote MSCF" location (e.g., the RDA RRRAT). At this point, it will only be temporarily started to set a password.

Table 4–54. MSCF Processor UD71A2A1 Full System Software Load – Continued

STEP	ACTION/PROCEDURE	RESPONSE/COMMENTS
37	At the Remote MSCF Server application `Password:` prompt, enter the desired site–unique password. At the `Verify:` prompt, reenter the same password.	The site System Administrator will normally control this password. After setting the password, the Remote MSCF Server is not actually running. When actually needed for remote graphical access, it will be restarted through a remote terminal session. If it is not necessary to restore any backed–up user accounts (data only), then this procedure is complete. However, if it is necessary to restore user accounts (data only), continue with the final step.
38	If this was a previously loaded system and there is a need to restore user account data which was backed–up prior to starting this procedure, then follow the procedure listed in Table 4–68.	Restores backed–up user account data if desired. Since user IDs and passwords were retained and restored as part of the software load and new user account home directories are also created, it is not necessary to recreate these user accounts after the load. All user accounts should be fully functional after the load. The restoral procedure is just for restoring previous user–specific data if desired. Log into CDE to start an MSCF display and a RPG HCI if desired.

Table 4–54. MSCF Processor UD71A2A1 Full System Software Load – Continued

STEP	ACTION/PROCEDURE	RESPONSE/COMMENTS
39	The twenty (20) sites listed below must perform Steps 40 through 49 to correct the /etc/hosts IP–address for their printer. All other sites, this procedure is complete. Albuquerque (KABX)* Atlanta (KFFC) Austin/San Antonio (KEWX) Birmingham (KBMX) Bismarck (KBIS) Burlington (KCXX) El Paso (KEPZ) Ft. Worth/Dallas (KFWS)* Jackson/Brandon (KDGX) Jacksonville (KJAX) Lake Charles (KLCH) Las Vegas (KESX) Los Angeles (KVTX) Mobile (KMOB) Norfolk (KAKQ) Norman (KTLX) Paducah (KPAH) Sacramento (KDAX) San Angelo (KSJT) Tallahassee (KTLH)	*Corrected during Build 5.0 Best Test. Use if Build 5.0 has to be reloaded.
40	Exit the CDE by clicking on the **EXIT** button, and clicking **OK** in the `Logout Confirmation` window.	
41	In the CDE Login window, at the `Please enter your user name` prompt, enter: **root<CR>**	
42	At the `Please enter your password` prompt, enter: *root_password***<CR>**	Both a Terminal window and a Console window should appear with a # prompt.
43	In a Terminal window, at the # prompt, enter: **cp /etc/hosts /etc/hosts.org<CR>**	This makes a copy of the current `/etc/hosts` file. A # prompt appears.

Table 4–54. MSCF Processor UD71A2A1 Full System Software Load – Continued

STEP	ACTION/PROCEDURE	RESPONSE/COMMENTS
44	Edit the `/etc/hosts` files with the CDE Text Editor. The Text Editor icon is the fifth from the left margin on the front panel, and is a notepad and pencil. Click on the **Text Editor** icon up arrow. Click on **Text Editor**	A `Text Editor - (UNTITLED)` window appears.
45	At the `Text Editor - (UNTITLED)` window: Click on **File** Click on **Open**	A `Text Editor - Open a File` window appears.
46	In the `Enter path or folder name:` edit box, enter: **/etc<CR>** In the `Enter file name:` edit box, enter: **hosts<CR>**	A `Text Editor - hosts` window appears.
47	Search down the list of `/etc/hosts` addresses. The printer address should be about line 14 of the addresses. It will look like: `172.25.`*`xxx`*`.21 printer...` where *xxx* is the value which must be changed to the site specific third octet. Make the third octet of the printer entry identical to the third octet entry of the mscf entry directly above it. Once the third octets of the mscf and printer entries match, do the follow: Click on **File** Click on **Save (needed)** Click on **File** Click on **Close**	
48	Exit out of the CDE by clicking on the **EXIT** button and clicking **OK** in the `Logout Confirmation` window.	This returns you to a CDE Login screen.
49	Login as Regular User.	Returns you to Console and Terminal windows as *`user:`*

NOTE

If the full system software load was aborted on the MSCF for any reason, all user accounts are lost. To correct this problem, reestablish all user accounts IAW Table 4–83 after the full software load is successfully completed. If this is a new replacement processor or fixed disk, user accounts must also be reestablished after the load IAW Table 4–83.

4.6.3.2 Load of New RPG Applications Software. Follow the procedures in Table 4–55 to perform a complete load of new RPG applications software. The following assumptions apply:

- The system is running Solaris 8 and has been previously fully loaded using the procedures in Table 4–52.
- All RPG software user accounts have been established IAW Table 4–83.
- A normal user is presently logged into the CDE on the RPG workstation.

SU

Table 4–55. Load of New RPG Applications Software

STEP	ACTION/PROCEDURE	RESPONSE/COMMENTS
	NOTE If this is being performed at the RPG workstation in the RPGPCA cabinet and there is a BDDS installed, Raritan user channel 1 (RPG) must be selected. Activate mouse and use the on–screen menus to login as **raritan<CR>** user (no password) or, if a screen saver is not active yet, hit the **<Scroll Lock>** key twice quickly to activate the on–screen menus. Then select the RPG user channel.	
1	Stop the present applications software IAW the procedures in Table 4–41.	This ensures no old processes are running when starting the new software. Log out of the CDE from the current user account.
2	Log back into the CDE as root.	This procedure must be performed in Super-user mode. If root privileges are not allowed, contact the System Administrator to continue with this procedure.
3	Place the full system software release CD labeled RPG LOAD MEDIA Version X.X into the CD–ROM drive and close the cradle door.	Version X.X is the current software version fielded.

Table 4–55. Load of New RPG Applications Software – Continued

STEP	ACTION/PROCEDURE	RESPONSE/COMMENTS
4	A `File Manager` window should appear.	The CD should auto–mount and bring up a `File Manager` window. The listed files/ directories should be relative to the CD. The name displayed at the top of the file manager window will also indicate "un-named_cdrom".
5	Double–click on the **install_apps_only.ksh** icon.	This is a installation script that can be used to install or reinstall the RPG, MSCF, or BDDS applications software. An `Action: Run` window will appear.
6	On the `Action: Run` window, click **OK**.	No options are needed. A `Run` window will appear and a disclaimer is displayed. Then, the system will prompt the user to continue, or not.

NOTE

Steps 7 through 16 each address a system load query/prompt and are divided into two parts. The first part of the step provides the query/prompt information and default information (if any) in the RESPONSE/COMMENTS column. The second part of the step provides the specific action/procedure required.

7	`Do you wish to continue with installation ?`
	
	`Yes or No [y,n,?,q]`	

	Enter: **y<CR>**	Displays load menu.

8	`Choose System Type to Load:`
	
	`1 RPG`
	`2 MSCF`
	`3 BDDS`
	
	`Enter Numeric Selection from Above, q to Quit or ? for Help: [?,??,q]:`	

	Enter: **1<CR>**	Indicates "`Installing RPG System...`".

Table 4–55. Load of New RPG Applications Software – Continued

STEP	ACTION/PROCEDURE	RESPONSE/COMMENTS
9	`Please enter the radar's site call letters (type 'help' for list):`	

	Enter the appropriate four letter site mnemonic and press **<CR>**. Enter **help<CR>** to see a list of site mnemonics if it is unclear about which mnemonic to use.	System responds with the system type, site name, and software version. For example:
		`System Type is: RPG`
		`Site Name  is: ktlx`
		`Software Version found is v1.92`
		
		If this is not an FAA Redundant system the installation will start. Proceed to step 11. If this is an FAA Redundant system, the "Software Version ..." line will not be noted yet. Continue with the next step.

10	`Is this channel 1 or 2?`	
	Enter either **1<CR>** or **2<CR>**	The "Software Version ..." line will now be noted and the installation will start.
11	The following feedback may be noted (example only): `/export/home/v1.92/orpg_bld_mb5_beta_v1.92_25MAY00.tar already exists; do you wish to overwrite /export/home/v1.92/orpg_bld_mb5_beta_v1.92_25MAY00.tar (yes or no)?`	This message will only appear if this is a reinstallation of the original applications software. Since this is being done to correct possible corrupted software, it is desirable to overwrite the current tar file. If this prompt does not appear, then the installation has started and it will take one to two minutes to complete. Continue to the next step.
	Enter: **y<CR>**	The installation will start and it will take one to two minutes to complete.

12	`Do you want to restore an adaptation archive from CD or floppy for` *SITE_NAME*`?`
	
	`Yes or No [y,n,?,q]`
		SITE_NAME `is the site being loaded at the time (site mnemonic).`

	Enter: **y<CR>** if adaptation floppy is available **n<CR>** if adaptation floppy is not available	If "n" is entered, proceed to step 16.

Table 4–55. Load of New RPG Applications Software – Continued

STEP	ACTION/PROCEDURE	RESPONSE/COMMENTS

13	`Choose the adaptation archive media to restore from:`
	
	`1 Floppy`
	`2 CD (current install CD)`
	
	`Enter Numeric Selection from Above, q to Quit or ? for Help: [?,??,q]:`
		At this time, adaptation data can only be restored from a floppy.

	Enter: **1<CR>**	Floppy selected.

14	`Is the floppy in the drive and ready?`
	
	`Yes or No [y,n,?,q]`
		Ensure adaptation floppy is in the drive.

	Insert the adaptation floppy in the floppy drive and then enter: **y<CR>**	System starts to mount floppy.

15	`Trying to mount floppy...`
	
	`Choose the adaptation file to restore:`
	
	`1 ./adapt00001.`*site_specific_info*
	`2 ./adapt00001.`*site_specific_info*
	`3 "`
	`4 "`
	`5 etc.`
	
	`Enter Numeric Selection from Above, q to Quit or ? for Help: [?,??,q]:`
		The *site_specific_info* will consist of the site name and the date/time when the adaptation data file was created. Unless directed otherwise, always select the latest backup from the list.

	Enter: **#<CR>**	Where "#" is the desired number from the list.

16	`Adaptation data successfully retrieved from media`
	
	`RPG Installation Done!`
	
	`Script Finished`
		If "n" was entered in step 12, the system will actually indicate that the adaptation data restoral was skipped.

Table 4–55. Load of New RPG Applications Software – Continued

STEP	ACTION/PROCEDURE	RESPONSE/COMMENTS
16 Cont.	Click on the `Run` window and enter: **<Ctrl> C** to close the `Run` window.	
17	On the `File Manager` window, click: **File ▶ Eject** Also, manually eject the adaptation data floppy if it was used.	Ejects the RPG LOAD MEDIA Version X.X CD media (remove and store) and closes the `File Manager` window. Also, store the adaptation data floppy if it was used.
18	At a window # prompt, enter: **init 6<CR>**	Reboots the system. System returns to the CDE Login screen after approximately two minutes. If this was a new version of applications software that was just loaded, the RPG software should auto–start and this procedure is theoretically complete. Perform steps 19, 22, and 23 if desired to verify the RPG is operating correctly. If this was a reinstallation of the original applications software, perform all remaining steps to restart the RPG software and verify proper operation.
19	Log back into the CDE using a normal user account.	When entering CDE within a normal user account, all environment variables which were imported as part of the software load are in effect.

NOTE

Starting with ROC development version v1.86, the applications account can not be accessed directly. Login as a normal user to access the applications software.

Starting with ROC development version v1.116, all normal user accounts have been set up with a default CDE “look” which includes one console window, one terminal window, and one digital clock. Due to variances in monitor sizes and types, the user may need to rearrange these items on the desktop as desired for best viewing. When arranged as desired, then log out of CDE to save the new desktop “look”.

Table 4–55. Load of New RPG Applications Software – Continued

STEP	ACTION/PROCEDURE	RESPONSE/COMMENTS
20	At a normal user prompt, enter: **rpg_ps<CR>**	If this was a reinstallation of the original applications software, this step will not return any feedback except an error message since the auto–start process is presently unsure about the previous state of the machine. Proceed to the next step to start the software. If this was a new version of applications software that was just loaded, the RPG software should auto–start and the "rpg_ps" command should display approximately 100 processes listed. None should show a "FAIL" in the "inst pid" column (proceed to step 23). If some processes did not start correctly (FAIL indicated) or if incorrect applications functionality is noted, perform the procedure in Table 4–41 to stop the software, perform the procedure in Table 4–43 to start the software in a clean start mode, and then proceed to step 23.
21	At a normal user prompt, enter: **start<CR>**	The "start" alias calls the "mrpg –v start-up" command which starts the RPG applications software. The start process will take approximately 30 seconds to complete. After returned to a prompt, the RPG should be operational.

Table 4–55. Load of New RPG Applications Software – Continued

STEP	ACTION/PROCEDURE	RESPONSE/COMMENTS
22	At a normal user prompt, enter: **rpg_ps<CR>**	This will display a list of the active RPG processes. There will be approximately 100 processes listed and none should show a "FAIL" in the "inst pid" column. If some processes did not start correctly (FAIL indicated) or if incorrect applications functionality is noted, perform the procedure in Table 4–41 to stop the software and then perform the procedure in Table 4–43 to start the software in a clean start mode.
23	If at the RPG Processor maintenance position within the RPGPCA cabinets and an HCI is desired, then, at the normal user prompt in any terminal window, enter: **hci&<CR>**	This will start the HCI on the maintenance position monitor. See Table 4–47 for procedures for starting an RPG HCI at the MSCF.

4.6.3.3 Load of New MSCF Applications Software. Follow the procedures in Table 4–56 to perform a complete load of new MSCF applications software. The following assumptions apply:

- The system is running Solaris 8 and has been previously fully loaded using the procedures in Table 4–54.
- All MSCF software user accounts have been established IAW Table 4–83.
- A normal user is presently logged into the CDE at the MSCF workstation.

SU

Table 4–56. Load of New MSCF Applications Software

STEP	ACTION/PROCEDURE	RESPONSE/COMMENTS
1	If in the CDE, exit the CDE by clicking **EXIT** on the CDE Control Panel and **OK** at the acknowledgement window.	Logs the current user out of the CDE.
2	Log back into the CDE as root.	This procedure must be performed in Superuser mode. If root privileges are not allowed, contact the System Administrator to continue with this procedure.
3	Place the full system software release CD labeled RPG LOAD MEDIA Version X.X into the CD–ROM drive and close the cradle door.	Version X.X is the current software version fielded.

Table 4–56. Load of New MSCF Applications Software – Continued

STEP	ACTION/PROCEDURE	RESPONSE/COMMENTS
4	A `File Manager` window should appear.	The CD should auto–mount and bring up a `File Manager` window. The listed files/ directories should be relative to the CD. The name displayed at the top of the file manager window will indicate "un-named_cdrom".
5	Double–click on the **install_apps_only.ksh** icon.	This is a installation script that can be used to install or reinstall the RPG, MSCF, or BDDS applications software. An `Action: Run` window will appear.
6	On the `Action: Run` window, click **OK**.	No options are needed. A `Run` window will appear and a disclaimer is displayed. Then, the system will prompt the user to continue, or not.

NOTE

Steps 7 through 17 each address a system load query/prompt and are divided into two parts. The first part of the step provides the query/prompt information and default information (if any) in the RESPONSE/COMMENTS column. The second part of the step provides the specific action/procedure required.

7	`Do you wish to continue with installation ?`
	
	`Yes or No [y,n,?,q]`	

	Enter: **y<CR>**	Displays load menu.

8	`Choose System Type to Load:`
	
	`1 RPG`
	`2 MSCF`
	`3 BDDS`
	
	`Enter Numeric Selection from Above, q to Quit or ? for Help: [?,??,q]:`	

	Enter: **2<CR>**	Indicates "`Installing MSCF System...`".

Table 4–56. Load of New MSCF Applications Software – Continued

STEP	ACTION/PROCEDURE	RESPONSE/COMMENTS

9	`A Distant MSCF connects to a DoD or FAA site. Is this a Distant MSCF?`
	
	`Yes or No [y,n,?,q]`	

	Enter either **y<CR>** or **n<CR**	Enter “n” for an MSCF off of an NWS system. Otherwise, enter “y”.
		If you answered yes and are a Distant MSCF, it will respond with the question in the following step.
10	Does this Distant MSCF have Frame Relay configured?`Does this Distant MSCF have Frame Relay configured?`	
	Enter either **y<CR>** or **n<CR>**	Enter “y” if you have the Frame Relay Hub Router UD75 installed. Otherwise, enter “n”. `Loading Cisco IOS Version 12.1 (21) IP`
11	`Please enter the radar’s site call letters (type ’help’ for list):`	

	Enter the appropriate four letter site mnemonic and press **<CR>**. Enter **help<CR>** to see a list of site mnemonics if it is unclear about which mnemonic to use.	System responds with the system type, site name and software version. For example:
		`System Type is: MSCF`
		`Site Name  is: ktlx`
		`Software Version found is v1.92`
		
		The installation will start.

Table 4–56. Load of New MSCF Applications Software – Continued

STEP	ACTION/PROCEDURE	RESPONSE/COMMENTS
12	The following feedback may be noted (example only): `/export/home/v1.92/orpg_bld_mb5_beta_v1.92_25MAY00.tar already exists; do you wish to overwrite /export/home/v1.92/orpg_bld_mb5_beta_v1.92_25MAY00.tar (yes or no)?`	This message will only appear if this is a reinstallation of the original applications software. Since this is being done to correct possible corrupted software, it is desirable to overwrite the current tar file. If this prompt does not appear, then the installation has started and it will take approximately one minute to complete. Continue to the next step.
	Enter: **y<CR>**	The installation will start and it will take approximately one minute to complete.

13	`Do you want to restore an adaptation archive from CD or floppy for` *SITE_NAME*`?`
	
	`Yes or No [y,n,?,q]`
		SITE_NAME `is the site being loaded at the time (site mnemonic).`

	Enter: **y<CR>** if adaptation floppy is available **n<CR>** if adaptation floppy is not available	If “n” is entered, proceed to step 17.

14	`Choose the adaptation archive media to restore from:`
	
	`1 Floppy`
	`2 CD (current install CD)`
	
	`Enter Numeric Selection from Above, q to Quit or ? for Help: [?,??,q]:`
		At this time, adaptation data can only be restored from a floppy.

	Enter: **1<CR>**	Floppy selected.

15	`Is the floppy in the drive and ready?`
	
	`Yes or No [y,n,?,q]`
		Ensure adaptation floppy is in the drive.

	Insert the adaptation floppy in the floppy drive and then enter: **y<CR>**	System starts to mount floppy.

Table 4–56. Load of New MSCF Applications Software – Continued

STEP	ACTION/PROCEDURE	RESPONSE/COMMENTS

16	`Trying to mount floppy...`
	
	`Choose the adaptation file to restore:`
	
	`1 ./adapt00001.`*site_specific_info*
	`2 ./adapt00001.`*site_specific_info*
	`3 "`
	`4 "`
	`5 etc.`
	
	`Enter Numeric Selection from Above, q to Quit or ? for Help: [?,??,q]:`
		The *site_specific_info* will consist of the site name and the date/time when the adaptation data file was created. Unless directed otherwise, always select the latest backup from the list.

	Enter: **#<CR>**	Where "#" is the desired number from the list.

17	`Adaptation data successfully retrieved from media`
	
	`MSCF Installation Done!`
	
	`Script Finished`
	
	Click on the `Run` window and enter:
	<Ctrl> C to close the `Run` window.
		If "n" was entered in step 13, the system will actually indicate that the adaptation data restoral was skipped.

18	On the `File Manager` window, click: **File ▶ Eject** Also, manually eject the adaptation data floppy if it was used.	Ejects the RPG LOAD MEDIA Version X.X CD media (remove and store) and closes the `File Manager` window. Also, store the adaptation data floppy if it was used.
19	At a window # prompt, enter: **init 6<CR>**	Reboots the system. System returns to the CDE Login screen after approximately two minutes. Log back into the CDE as a normal user to start an MSCF display and an RPG HCI if desired. The MSCF display should auto–start and then it can be used to start an RPG HCI.

Table 4–56. Load of New MSCF Applications Software – Continued

STEP	ACTION/PROCEDURE	RESPONSE/COMMENTS
	NOTE Starting with ROC development version v1.86, the applications account can not be accessed directly. Login as a normal user to access the applications software. Starting with ROC development version v1.116, all normal user accounts have been set up with a default CDE "look" which includes one console window, one terminal window, and one digital clock. Due to variances in monitor sizes and types, the user may need to rearrange these items on the desktop as desired for best viewing. When arranged as desired, then log out of CDE to save the new desktop "look".	

4.6.3.4 Load of New BDDS Applications Software. Follow the procedures in Table 4–57 to perform a complete load of new BDDS applications software. All of this procedure must be performed in Superuser (su) mode (i.e., with root access). The following assumptions apply:

- The system is running Solaris 8 and has been previously fully loaded using the procedures in Table 4–53.
- All BDDS software user accounts have been established IAW Table 4–83.
- The system is presently at a CDE Login window.

SU

Table 4–57. Load of New BDDS Applications Software

STEP	ACTION/PROCEDURE	RESPONSE/COMMENTS
	NOTE If this is being performed at the BDDS workstation (installed in the RPGPCA cabinet), Raritan user channel 2 (BDDS) must be selected. Activate mouse and use the on–screen menus to login as **raritan<CR>** user (no password) or, if a screen saver is not active yet, hit the **<Scroll Lock>** key twice quickly to activate the on–screen menus. Then select the BDDS user channel.	
1	Log into CDE as root. Stop the present applications software IAW the procedures in Table 4–48. At the end of the "stop" procedure, note the PID of the remaining "wbcontrol" process still running after the applications software is stopped.	This ensures no old applications–level processes are running while loading the new software. The PID of the "wbcontrol" process will be used in the next step.

Table 4–57. Load of New BDDS Applications Software – Continued

STEP	ACTION/PROCEDURE	RESPONSE/COMMENTS
2	At the # prompt, enter: **kill –9** *PID***<CR>**	Where *PID* is the PID of the "wbcontrol" process that was still running after the BDDS applications software was stopped.
3	Place the full system software release CD labeled RPG LOAD MEDIA Version X.X into the CD–ROM drive and close the cradle door.	Version X.X is the current software version fielded.
4	A `File Manager` window should appear.	The CD should auto–mount and bring up a `File Manager` window. The listed files/ directories should be relative to the CD. The name displayed at the top of the file manager window will indicate "un-named_cdrom".
5	Double–click on the **install_apps_only.ksh** icon.	This is a installation script that can be used to install or reinstall the RPG, MSCF, or BDDS applications software. An `Action: Run` window will appear.
6	On the `Action: Run` window, click **OK**.	No options are needed. A `Run` window will appear and a disclaimer is displayed. Then, the system will prompt the user to continue, or not.

NOTE

Steps 7 through 11 each address a system load query/prompt and are divided into two parts. The first part of the step provides the query/prompt information and default information (if any) in the RESPONSE/COMMENTS column. The second part of the step provides the specific action/procedure required.

7	`Do you wish to continue with installation ?`
	
	`Yes or No [y,n,?,q]`	

	Enter: **y<CR>**	Displays load menu.

Table 4–57. Load of New BDDS Applications Software – Continued

STEP	ACTION/PROCEDURE	RESPONSE/COMMENTS

8	`Choose System Type to Load:`
	
	`1 RPG`
	`2 MSCF`
	`3 BDDS`
	
	`Enter Numeric Selection from Above, q to Quit or ? for Help: [?,??,q]:`	

	Enter: **3<CR>**	Indicates "`Installing BDDS System...`".
9	`Please enter the radar's site call letters (type 'help' for list):`	

	Enter the appropriate four letter site mnemonic and press **<CR>**. Enter **help<CR>** to see a list of site mnemonics if it is unclear about which mnemonic to use.	System responds with the system type and site name. For example:
		`System Type is: BDDS`
		`Site Name is: ktlx`
		The installation will start.

10	The following feedback may be noted (example only): `/export/home/bdds_bld_1.4_050800.tar already exists; do you wish to overwrite /export/home/bdds_bld_1.4_050800.tar (yes or no)?`	This message will only appear if this is a reinstallation of the original applications software. Since this is being done to correct possible corrupted software, it is desirable to overwrite the current tar file. If this prompt does not appear, then the installation has started and it will take approximately 30 seconds to complete. Continue to the next step.
	Enter: **y<CR>**	The installation will start and it will take approximately 30 seconds to complete.

11	`BDDS Installation Done!`
	
	`Script Finished`	

	Click on the `Run` window and enter: **<Ctrl> C** to close the `Run` window.	
12	On the `File Manager` window, click: **File ▶ Eject**	Ejects the RPG LOAD MEDICA Version X.X CD media (remove and store) and closes the `File Manager` window.

Table 4–57. Load of New BDDS Applications Software – Continued

STEP	ACTION/PROCEDURE	RESPONSE/COMMENTS
13	At a window # prompt, enter: **init 6<CR>**	Reboots the system. When the system boots, the BDDS software will start automatically and it requires no operator assistance. However, if it is desired to verify operability, log into the CDE as root and use the */bdds/wbstat* command to verify that the BDDS software started (see step 6 of Table 4–49 for additional information).

4.6.4 SOFTWARE BACKUPS.

Software that is periodically backed up can be restored with all changes made up to the point it was backed up. If the user has to do an initial software load, no user changes would be available immediately after that load. With backups, some site–unique software (e.g., user accounts) could possibly be retrieved. On the other hand, if software was just reloaded to overcome some type of software problem, caution must be exercised when restoring backup data because the backup data may also have some corruption.

4.6.4.1 Type of Backups. This paragraph will provide procedures for both operating system (system–level) backups as well as a procedure for backing up the RPG applications software, the MSCF applications software, individual user accounts and the RPG adaptation data. There are two methods of backups described in this section:

- Backup using “ufsdump”. Use of User File System Dump (ufsdump) allows the user to backup individual file systems (e.g., */var*, */export/home*, etc.). These are considered a system–level backups even though they are designed to backup individual file “systems” rather than the entire operating system at one time.

- Backup using “tar“. Use of Tape Archive (tar) allows the user to backup any level of software desired. For the applications–level type software backups (e.g., RPG application software) and user account backups, “tar” is used exclusively.

NOTE

There is no longer any procedures designed to actually accomplish true “full system” backups or restorals. With the advent of CD software loads, it is easier and quicker to reload the software from the original load CD rather than restoring a complete system from a backup. After reloading from the original load CD, user accounts can be restored from backups, and in the case of the RPG or MSCF, it may be desired to restore applications software to restore site–unique adaptation data or other customization. No specific backup procedure is provided for the BDDS applications software. No adaptation data exists for the BDDS unit and, since it is a non–critical system, it can always be fully reloaded from CD without impacting critical operations.

NOTE

With the exception of the RPG adaptation data backup procedure, all of the following procedures are designed to use the Jaz drive as the backup/restoral device. For these examples, the mount point directory referenced is */jaz*. However, as indicated at the bottom of Table 4–75, the user can chose to make and use uniquely–named mount point directories depending on what the user intends to do at the time. For the RPG and MSCF adaptation data backup procedures, a floppy disk is used instead of a Jaz disk.

Index, Software Backups

Procedure	Reference
System Software Backup Using ufsdump (Example)	Table 4–58
RPG Applications Software Backup	Table 4–59
MSCF Applications Software Backup	Table 4–60
Backup of BDDS User Account Directories Using tar	Table 4–61
Backup of RPG or MSCF User Account Directories Using tar	Table 4–62
Adaptation Data Backups at RPG Workstation	Table 4–63
Adaptation Data Backups at MSCF Workstation	Table 4–64

4.6.4.2 RPG/MSCF/BDDS System Software Backup Using ufsdump (Example). Use of the ufsdump utility allows software to be backed up individually for each file system. This allows software to be restored individually for each file system. Thus, it allows for restoration of one file system without having to restore all file systems at the same time. Table 4–58 provides the procedures for performing system–level backups using ufsdump. There are normally six file systems that can be individually backed–up:

- /

- /export/home
- /opt
- /usr
- /usr/openwin
- /var

To back up the entire processor system using ufsdump, the user would need to back up all six of these file systems individually. However, as previously indicated, there is no real need to perform a backup of this nature since full system software can be reloaded easily and this section exists primarily as a System Administrator reference only. Table 4–58 will only provide an example of dumping the /*export*/*home* file system (normally has all user directories, including the applications software).

SU

Table 4–58. RPG/MSCF/BDDS System Software Backup Using ufsdump (Example)

STEP	ACTION/PROCEDURE	RESPONSE/COMMENTS
	NOTE If this is being performed at the RPG workstation or BDDS workstation in the RPGPCA cabinet, Raritan user channel 1 (RPG) or user channel 2 (BDDS) must be selected as appropriate. Activate mouse and use the on–screen menus to login as **raritan<CR>** user (no password) or, if a screen saver is not active yet, hit the **<Scroll Lock>** key twice quickly to activate the on–screen menus. Then select the RPG or BDDS user channel as appropriate.	
1	For the RPG processor only, stop the applications software per Table 4–41.	This is necessary to be able to unmount and retrieve the Archive III Jaz disk prior to performing the backup.
2	Exit out of CDE by clicking **EXIT** on the CDE Control Panel and **OK** at the acknowledgement window.	Exits CDE. If not in CDE, proceed to the next step.
3	At the CDE Login screen, click and hold **Options** then select **Command Line Login**.	Will enable login as root outside of the CDE.
4	Enter a **<CR>**	Necessary to get to a Command Line Login prompt.

Table 4–58. RPG/MSCF/BDDS System Software Backup Using ufsdump (Example) – Continued

STEP	ACTION/PROCEDURE	RESPONSE/COMMENTS
5	At the "*node_name* console login:" prompt, enter: **root<CR>** and then *root_password***<CR>** at the Password: prompt.	The remainder of this procedure must be performed as a Superuser. If root privileges are not allowed, contact the System Administrator for assistance with this procedure.
6	If at an RPG processor, then at the # prompt, enter: **umount /jaz<CR>** then press the button on the Jaz drive and remove the Archive III Jaz disk from the drive.	This unmounts the Archive III Jaz disk prior to performing the backup. If not at an RPG processor, continue with the next step. If a "umount: /jaz not mounted" message occurs, it indicates that the Jaz disk cartridge is already unmounted.
7	At the # prompt, enter: **shutdown<CR>**	This will give all users a one minute notice of pending shutdown.
8	At the `Do you want to continue? (y or n):` prompt, enter: **y<CR>**	Shuts down to single user mode.
9	At the `Type control-d to proceed with normal startup, (or give root_password for system maintenance):` prompt, enter *root_password***<CR>** to continue.	Now at single–user mode.
10	At the # prompt, enter: **cd /<CR>**	Places the user at the root directory (/).
11	Insert the backup disk cartridge into the Jaz drive.	This should be a cartridge that will be retained for this backup. The disk cartridge should have already been "formatted" IAW the procedures in Table 4–75.
12	At the # prompt, enter: **mkdir /jaz<CR>**	This only needs to be done once on the system unless the system software is fully reloaded. If a `File exists` error is displayed, it means that the /*jaz* mount point directory already exists.

NOTE

At the MSCF, a "jazmount" utility also exists which will automount the Jaz disk to a /*jaz* mount point and this utility can be used in lieu of step 13. If used (**jazmount<CR>**), it does a file system check (fsck) on the disk and it will take approximately 30 seconds before the disk mount completes.

Table 4–58. RPG/MSCF/BDDS System Software Backup Using ufsdump (Example) – Continued

STEP	ACTION/PROCEDURE	RESPONSE/COMMENTS
13	Mount the disk cartridge as follows at the # prompt: **mount /dev/dsk/c1t3dØs2 /jaz<CR>**	As indicated by the note and examples at steps 19 through 25 of Table 4–75, the mount point directory name may be a different name if the user chooses to use a different name. In this example, the directory mount point name /*jaz* is used. If a different name is used, that name (path) must be substituted for /*jaz* for the remainder of this procedure.
14	At the # prompt, enter: **ufsdump Øucf /jaz/exp_home /export/home <CR>**	
		This will dump the /*export*/*home* file system to a file named "exp_home" on the Jaz disk cartridge (mounted at /jaz). This process should could take up to 10 minutes depending on the size of the file system being dumped.
15	At the # prompt, enter: **umount /jaz<CR>**	This unmounts the Jaz disk from the /*jaz* mount point.
16	Press the button on the Jaz drive to eject the disk, remove the backup disk cartridge from the Jaz drive, and label its contents on a disk label. If at an RPG processor, reinstall the Archive III Jaz disk.	Ensure the disk label indicates the processor where the backup was performed (RPG, MSCF, or BDDS), the current system software build, and the current date at a minimum. Return the disk to its holder and store the disk in a safe location.

CAUTION

A backup of this nature can not be made on one system processor (RPG, MSCF, or BDDS) and later restored on a different processor. It should only be used for restorals on the same processor. Ensure the Jaz disk label indicates the processor on which this backup was made and use/label a separate Jaz disk cartridge for each processor.

Table 4–58. RPG/MSCF/BDDS System Software Backup Using ufsdump (Example) – Continued

STEP	ACTION/PROCEDURE	RESPONSE/COMMENTS
17	At the # prompt, enter: **sync<CR>** **init 3<CR>**	This will perform an initialization to the multi–user mode (init level 3) and to a CDE Login screen. Return to normal operations as desired. Message concerning `http-8888 failed to start ...` is not critical.
18	If at an RPG processor, log into CDE and restart applications software per Table 4–42. If at an MSCF processor, log into CDE and restart the MSCF applications per Table 4–46 and Table 4–47.	If at an RPG, applications software was stopped prior to performing this procedure.

4.6.4.3 RPG Applications Software Backup. The RPG applications software should be backed up after it is loaded and when all adaptable parameters are set as desired. It should also be backed up after any changes are made to adaptable parameters. Table 4–59 provides the procedures for performing a backup of the RPG applications software.

SU

Table 4–59. RPG Applications Software Backup

STEP	ACTION/PROCEDURE	RESPONSE/COMMENTS
	NOTE If this is being performed at the RPG workstation in the RPGPCA cabinet and there is a BDDS installed, Raritan user channel 1 (RPG) must be selected. Activate mouse and use the on–screen menus to login as **raritan<CR>** user (no password) or, if a screen saver is not active yet, hit the **<Scroll Lock>** key twice quickly to activate the on–screen menus. Then select the RPG user channel.	
1	Stop the applications software per Table 4–41.	This is necessary to be able to unmount and retrieve the Archive III Jaz disk prior to performing the backup.
2	Exit out of CDE by clicking **EXIT** on the CDE Control Panel and **OK** at the acknowledgement window.	Exits CDE. If not in CDE, proceed to the next step.
3	At the CDE Login screen, click and hold **Options** then select **Command Line Login**.	Will enable login as root outside of the CDE.
4	Enter a **<CR>**	Necessary to get to a Command Line Login prompt.

Table 4–59. RPG Applications Software Backup – Continued

STEP	ACTION/PROCEDURE	RESPONSE/COMMENTS
5	At the "*node_name* console login:" prompt, enter: **root<CR>** and then *root_password***<CR>** at the Password: prompt.	The remainder of this procedure must be performed as a Superuser. If root privileges are not allowed, contact the System Administrator for assistance with this procedure.
6	At the # prompt, enter: **umount /jaz<CR>** then press the button on the Jaz drive and remove the Archive III Jaz disk from the drive.	This unmounts the Archive III Jaz disk prior to performing the backup. If a "umount: /jaz not mounted" message occurs, it indicates that the Jaz disk cartridge is already unmounted.
7	At the # prompt, enter: **shutdown<CR>**	This will give all users a one minute notice of pending shutdown.
8	At the `Do you want to continue? (y or n):` prompt, enter: **y<CR>**	Shuts down to single user mode.
9	At the `Type control-d to proceed with normal startup, (or give root password for system maintenance):` prompt, enter *root_password***<CR>** to continue.	Now at single–user mode.
10	Insert the backup disk cartridge into the Jaz drive.	This should be a cartridge that will be retained for this backup. The disk cartridge should have been already been "formatted" IAW the procedures in Table 4–75.
11	At the # prompt, enter: **mkdir /jaz<CR>**	This only needs to be done once on the system unless the system software is fully reloaded. If a "File exists" error is displayed, it means that the */jaz* mount point directory already exists.

NOTE

At the MSCF, a "jazmount" utility also exists which will automount the Jaz disk to a */jaz* mount point and this utility can be used in lieu of step 12. If used (**jazmount<CR>**), it does a file system check (fsck) on the disk and it will take approximately 30 seconds before the disk mount completes.

Table 4–59. RPG Applications Software Backup – Continued

STEP	ACTION/PROCEDURE	RESPONSE/COMMENTS
12	Mount the disk cartridge as follows at the # prompt: **mount /dev/dsk/c1t3dØs2 /jaz<CR>**	As indicated by the note and examples at steps 19 through 25 of Table 4–75, the mount point directory name may be a different name if the user chooses to use a different name. In this example, the directory mount point name /*jaz* is used. If a different name is used, that name (path) must be substituted for /*jaz* for the remainder of this procedure.
13	At the # prompt, change to the home directory of the current RPG software build: **cd /export/home/***home_dir***<CR>**	The home directory (*home_dir*) of the current software build is v*n.n*, where *.n.n* could be "1.0" or "1.13" for Open Build 1, "2.0" for Open Build 2, etc (as examples).
14	At the # prompt, enter: **tar cvf /jaz/rpgapps.tar . <CR>**	This will archive all files from the home directory to a file named "rpgapps.tar" on the Jaz disk cartridge (mounted at /*jaz*). This process should only take approximately one minute and the system then returns to the # prompt.
15	At the # prompt, enter: **umount /jaz<CR>**	This unmounts the Jaz disk from the /*jaz* mount point.
16	Press the button on the Jaz drive to eject the disk, remove the backup disk cartridge from the Jaz drive, and label its contents. Reinstall the Archive III Jaz disk.	Ensure the disk label indicates the current system software build and current date as a minimum. Return the disk to its holder and store the disk in a safe location.
17	At the # prompt, enter: **sync<CR>** **init 3<CR>**	This will perform an initialization to the multi–user mode (init level 3) and to a CDE Login screen. Return to normal operations as desired. Message concerning `http-8888 failed to start ...` is not critical.
18	Log into CDE and restart RPG applications software per Table 4–42.	Applications software was stopped prior to performing this procedure.

4.6.4.4 MSCF Applications Software Backup. Table 4–60 provides the procedures for performing a backup of the MSCF applications software.

SU

Table 4–60. MSCF Applications Software Backup

STEP	ACTION/PROCEDURE	RESPONSE/COMMENTS
1	Exit out of CDE by clicking **EXIT** on the CDE Control Panel and **OK** at the acknowledgement window.	Exits CDE. If not in CDE, proceed to the next step.
2	At the CDE Login screen, click and hold **Options** then select **Command Line Login**.	Will enable login as root outside of the CDE.
3	Enter a **<CR>**	Necessary to get to a Command Line Login prompt.
4	At the "*node_name* console login:" prompt, enter: **root<CR>** and then *root_password***<CR>** at the Password: prompt.	The remainder of this procedure must be performed as a Superuser. If root privileges are not allowed, contact the System Administrator for assistance with this procedure.
5	At the # prompt, enter: **shutdown<CR>**	This will give all users a one minute notice of pending shutdown.
6	At the `Do you want to continue? (y or n):` prompt, enter: **y<CR>**	Shuts down to single user mode.
7	At the `Type control-d to proceed with normal startup, (or give root password for system maintenance):` prompt, enter *root_password***<CR>** to continue.	Now at single–user mode.
8	Insert the backup disk cartridge in the Jaz drive.	This should be a cartridge that will be retained for this backup. The disk cartridge should have been already been "formatted" IAW the procedures in Table 4–75.
9	At the # prompt, enter: **mkdir /jaz<CR>**	This only needs to be done once on the system unless the system software is fully reloaded. If a "File exists" error is displayed, it means that the */jaz* mount point directory already exists.

Table 4–60. MSCF Applications Software Backup – Continued

STEP	ACTION/PROCEDURE	RESPONSE/COMMENTS
	NOTE At the MSCF, a "jazmount" utility also exists which will automount the Jaz disk to a */jaz* mount point and this utility can be used in lieu of step 10. If used (**jazmount<CR>**), it does a file system check (fsck) on the disk and it will take approximately 30 seconds before the disk mount completes.	
10	Mount the disk cartridge as follows at the # prompt: **mount /dev/dsk/c1t3dØs2 /jaz<CR>**	As indicated by the note and examples at steps 19 through 25 of Table 4–75, the mount point directory name may be a different name the user chooses to use a different name. In this example, the directory mount point name */jaz* is used. If a different name is used, that name (path) must be substituted for */jaz* for the remainder of this procedure.
11	At the # prompt, change to the home directory of the current RPG software build: **cd /export/home/*home_dir*<CR>**	The home directory (*home_dir*) of the current software build is v*n.n*, where *.n.n* could be "1.0" or "1.13" for Open Build 1, "2.0" for Open Build 2, etc (as examples).
12	At the # prompt, enter: **tar cvf /jaz/mscfapps.tar . <CR>**	This will archive all files from the home directory to a file named "mscfapps.tar" on the Jaz disk cartridge (mounted at */jaz)*. This process should only take approximately one minute and the system then returns to a # prompt.
13	At the # prompt, enter: **umount /jaz<CR>**	This unmounts the Jaz disk from the */jaz* mount point.
14	Press the button on the Jaz drive to eject the disk, remove the backup disk cartridge from the Jaz drive, and label the contents on its disk label.	Ensure the disk label indicates the current system software build and current date as a minimum. Return the disk to its holder and store the disk in a safe location.
15	At the # prompt, enter: **sync<CR>** **init 3<CR>**	This will perform an initialization to the multi–user mode (init level 3) and to a CDE Login screen. Return to normal operations as desired. Message concerning `http-8888 failed to start ...` is not critical.
16	Log into CDE and restart the MSCF applications per Table 4–46 and Table 4–47.	Procedure complete.

4.6.4.5 Backup of User Account Directories. The tar process is also used to backup user account home directories. These procedures are only for backing up information in user account home directories should a user later need to retrieve old data following a software load. These particular backups will not help to actually reestablish user accounts should they be lost because of an aborted full system software load or if a new processor or hard disk is installed. In these cases, previous user accounts must always be reestablished IAW Table 4–83 following the full system software load.

User accounts can and will exist on all three processors. Table 4–61 is for use at the BDDS processor since it doesn't have a Jaz drive. Table 4–62 provides the procedures for performing these backups on an RPG or MSCF processor.

If all user account home directories require backup, then perform backup of the BDDS user account directories first (Table 4–61) prior to performing backup of the RPG user account directories. This will ensure the BDDS user account backup file is placed on the RPG's backup Jaz disk cartridge when its backup is done. These backup procedures assume that all user account directories exist in the */export/home* file system.

NOTE

The procedures are designed to stop user applications software if not already stopped. Therefore, these procedures should not be performed if system operation can not be impacted at this time.

SU

Table 4–61. Backup of BDDS User Account Directories Using tar

STEP	ACTION/PROCEDURE	RESPONSE/COMMENTS
	NOTE If this is being performed at the BDDS workstation installed in the RPGPCA cabinet, Raritan user channel 2 (BDDS) must be selected. Activate mouse and use the on–screen menus to login as **raritan<CR>** user (no password) or, if a screen saver is not active yet, hit the **<Scroll Lock>** key twice quickly to activate the on–screen menus. Then select the BDDS user channel.	
1	Exit out of CDE by clicking **EXIT** on the CDE Control Panel and **OK** at the acknowledgement window.	Exits CDE. If not in CDE, proceed to the next step.
2	At the CDE Login screen, click and hold **Options** then select **Command Line Login**.	Will enable login as root outside of the CDE.
3	Enter a **<CR>**	Necessary to get to a Command Line Login prompt.

Table 4–61. Backup of BDDS User Account Directories Using tar – Continued

STEP	ACTION/PROCEDURE	RESPONSE/COMMENTS
4	At the "*node_name* console login:" prompt, enter: **root<CR>** and then *root_password***<CR>** at the Password: prompt.	The remainder of this procedure must be performed as a Superuser. If root privileges are not allowed, contact the System Administrator for assistance with this procedure.
5	At the # prompt, enter: **shutdown<CR>**	This will give all users a one minute notice of pending shutdown.
6	At the `Do you want to continue? (y or n):` prompt, enter: **y<CR>**	Shuts down to single user mode.
7	At the `Type control-d to proceed with normal startup, (or give root password for system maintenance):` prompt, enter *root_password***<CR>** to continue.	Now at single–user mode.
8	At the # prompt, enter: **cd /export/home<CR>**	Places the user at the */export/home* directory which is the file system for all user accounts.
9	At the # prompt, enter: **cp –p /etc/passwd .<CR>**	Copies the system "/etc/passwd" file to this directory. This file can be used later by the System Administrator as a record of user IDs existing when this backup is made.
10	At the # prompt, enter: **ls –l | more<CR>** Use the spacebar to advance one full screen at a time, or the **<CR>** to advance a line at a time.	Determine all user account names (directories) that require backup (site personnel). User names consists of personnel's names that have access to individual accounts on the BDDS. This information is used in the next step.

Table 4–61. Backup of BDDS User Account Directories Using tar – Continued

STEP	ACTION/PROCEDURE	RESPONSE/COMMENTS
11	At the # prompt, enter: **cat > include.list<CR>** **passwd<CR>** **roc<CR>** *user1*<CR> *user2*<CR> . . . *usern*<CR> When all user names are entered, press **<Ctrl> D**	This makes a file called "include.list" which has the directory names of all users (noted in step 10) that should be included in the tar file (from "roc" to the last user *usern*). The control key function (**<Ctrl> D**) ends the entry input into the file. The /etc/passwd file is included to provide a System Administrator a way to later identify user IDs that existed when the backup was made. This would be important if user accounts are recreated for any reason after the backup was made and different user IDs are used for pre–existing users.
12	At the # prompt, enter: **cat include.list<CR>**	Verify that the list has all of the correct user account names (directories). If not, repeat steps 11 and 12.
13	At the # prompt, enter: **tar cvf bdds_users.tar -I include.list<CR>**	
		This will archive all user account directories listed in the "include.list" file to the current directory (/*export*/*home*) with a file name of "bdds_users.tar". This process could take a few minutes depending on the number of user accounts on the system.
14	At the # prompt, enter: **sync<CR>** **init 3<CR>**	This will perform an initialization to the multi–user mode (init level 3) and to a CDE Login screen. BDDS applications software will auto–start. Message concerning `http-8888 failed to start ...` is not critical.

NOTE

The BDDS does not have a Jaz drive and if its software were completely reloaded at this point, the "bdds_users.tar" file would be lost. The remaining steps are for compressing this file and shipping it to the RPG processor for storage, both at the RPG processor itself as well as the RPG's Jaz drive if Table 4–62 is accomplished.

15	At the CDE Login screen, click and hold **Options** then select **Command Line Login**.	Will enable login as root outside of the CDE.

Table 4–61. Backup of BDDS User Account Directories Using tar – Continued

STEP	ACTION/PROCEDURE	RESPONSE/COMMENTS
16	Enter a **<CR>**	Necessary to get to a Command Line Login prompt.
17	At the "*node_name* console login:" prompt, enter: **root<CR>** and then *root_password***<CR>** at the Password: prompt.	
18	At the # prompt, enter: **cd /export/home<CR>**	Places the user at the /*export*/*home* directory which is where the "bdds_users.tar" file is located.
19	At the # prompt, enter: **compress bdds_users.tar<CR>**	Compresses the file and makes a "bdds_users.tar.Z" file.
20	At the # prompt, enter: **ftp rpg<CR>**	Establishes an FTP session to the RPG.
21	When prompted, enter: **root<CR>** and then enter the RPG's *root_password***<CR>** at the Password: prompt.	This will log the user into the RPG with root privileges.
22	At the `ftp>` prompt, enter: **cd /export/home<CR>**	At this point, the change directory command (cd) is actually occurring at the remote end (i.e., the RPG).
23	At the `ftp>` prompt, enter: **put bdds_users.tar.Z<CR>**	Ships the "bdds_users.tar.Z" file to the RPG's /*export*/*home* directory. This process should take no more than one minute.
24	At the `ftp>` prompt, enter: **quit<CR>**	Quits the FTP session.
25	At the # prompt, enter: **exit<CR>**	Exits the command line functions and returns to the CDE Login screen.

NOTE

If all user account directories require backup, then perform backup of the BDDS user account directories first (Table 4–61) prior to performing backup of the RPG user account directories. This will ensure the BDDS user account backup file is placed on the RPG's backup Jaz disk cartridge when its backup is done.

SU

Table 4–62. Backup of RPG or MSCF User Account Directories Using tar

STEP	ACTION/PROCEDURE	RESPONSE/COMMENTS
	NOTE If this is being performed at the RPG workstation in the RPGPCA cabinet and there is a BDDS installed, Raritan user channel 1 (RPG) must be selected. Activate mouse and use the on–screen menus to login as **raritan<CR>** user (no password) or, if a screen saver is not active yet, hit the **<Scroll Lock>** key twice quickly to activate the on–screen menus. Then select the RPG user channel.	
1	For the RPG processor only, stop the applications software per Table 4–41.	This is necessary to be able to unmount and retrieve the Archive III Jaz disk prior to performing the backup.
2	Exit out of CDE by clicking **EXIT** on the CDE Control Panel and **OK** at the acknowledgement window.	Exits CDE. If not in CDE, proceed to the next step.
3	At the CDE Login screen, click and hold **Options** then select **Command Line Login**.	Will enable login as root outside of the CDE.
4	Enter a **<CR>**	Necessary to get to a Command Line Login prompt.
5	At the "*node_name* console login:" prompt, enter: **root<CR>** and then *root_password***<CR>** at the Password: prompt.	The remainder of this procedure must be performed as a Superuser. If root privileges are not allowed, contact the System Administrator for assistance with this procedure.
6	If at an RPG processor, then at the # prompt, enter: **umount /jaz<CR>** then press the button on the Jaz drive and remove the Archive III Jaz disk from the drive.	This unmounts the Archive III Jaz disk prior to performing the backup. If not at an RPG processor, continue with the next step. If a `umount: /jaz not mounted` message occurs, it indicates that the Jaz disk cartridge is already unmounted.
7	At the # prompt, enter: **shutdown<CR>**	This will give all users a one minute notice of pending shutdown.
8	At the `Do you want to continue? (y or n):` prompt, enter: **y<CR>**	Shuts down to single user mode.

Table 4–62. Backup of RPG or MSCF User Account Directories Using tar – Continued

STEP	ACTION/PROCEDURE	RESPONSE/COMMENTS
9	At the `Type control-d to proceed with normal startup, (or give root password for system maintenance):` prompt, enter *root_password*<**CR**> to continue.	Now at single–user mode.
10	At the # prompt, enter: **cd /export/home<CR>**	Places the user at the */export/home* directory which is the file system for all user accounts.
11	At the # prompt, enter: **cp –p /etc/passwd .<CR>**	Copies the system "/etc/passwd" file to this directory. This file can be used later by the System Administrator as a record of user IDs existing when this backup is made.
12	At the # prompt, enter: **ls –l | more<CR>** Use the spacebar to advance a one full screen at a time, or the **<CR>** to advance a line at a time.	Determine all user account names (directories) that require backup (site personnel). This information is used in the next step. If at an RPG processor, also note if a "bdds_users.tar.Z" file exists. If it does, this tar file will be individually backed–up in step 19.
13	At the # prompt, enter: **cat > include.list<CR>** **passwd<CR>** **roc<CR>** *user1*<**CR**> *user2*<**CR**> . . . *usern*<**CR**> When all user names are entered, press **<Ctrl> D**	This makes a file called "include.list" which has the directory names of all users (noted in step 12) that should be included in the tar file (from "roc" to the last user *usern*). The control key function (**<Ctrl> D**) ends the entry input into the file. The /etc/passwd file is included to provide a System Administrator a way to later identify user IDs that existed when the backup was made. This would be important if user accounts are recreated for any reason after the backup was made and different user IDs are used for pre–existing users.
14	At the # prompt, enter: **cat include.list<CR>**	Verify that the list has all of the correct user account names (directories). If not, repeat steps 13 and 14 (will overwrite bad file).
15	Insert the backup disk cartridge in the Jaz drive.	This should be a cartridge that will be retained for this backup. The disk cartridge should have been already been "formatted" IAW the procedures in Table 4–75.

Table 4–62. Backup of RPG or MSCF User Account Directories Using tar – Continued

STEP	ACTION/PROCEDURE	RESPONSE/COMMENTS
16	At the # prompt, enter: **mkdir /jaz<CR>**	This only needs to be done once on the system unless the system software is fully reloaded. If a "File exists" error is displayed, it means that the /*jaz* mount point directory already exists.
	NOTE At the MSCF, a "jazmount" utility also exists which will automount the Jaz disk to a /*jaz* mount point and this utility can be used in lieu of step 17. If used (**jazmount<CR>**), it does a file system check (fsck) on the disk and it will take approximately 30 seconds before the disk mount completes.	
17	Mount the disk cartridge as follows at the # prompt: **mount /dev/dsk/c1t3dØs2 /jaz<CR>**	As indicated by the note and examples at steps 19 through 25 of Table 4–75, the mount point directory name may be a different name if the user chooses to use a different name. In this example, the directory mount point name /*jaz* is used. If a different name is used, that name (path) must be substituted for /*jaz* for the remainder of this procedure.
18	At the # prompt, enter: **tar cvf /jaz/users.tar -I include.list<CR>**	
		This will archive all user account directories listed in the "include.list" file to the Jaz disk cartridge (mounted at /*jaz*) with a file name of "users.tar". This process could take a few minutes depending on the number of user accounts on the system. If a "bdds_users.tar.Z" file existed in step 12, perform the next step. Otherwise, proceed to step 20.
19	At the # prompt, enter: **cp bdds_users.tar.Z /jaz<CR>**	This will individually copy the compressed backup of the BDDS user accounts ("bdds_users.tar.Z") to the Jaz disk cartridge.
20	At the # prompt, enter: **umount /jaz<CR>**	This unmounts the Jaz disk from the /*jaz* mount point.

Table 4–62. Backup of RPG or MSCF User Account Directories Using tar – Continued

STEP	ACTION/PROCEDURE	RESPONSE/COMMENTS
21	Press the button on the Jaz drive to eject the disk, remove the backup disk cartridge from the Jaz drive, and label the contents on its disk label. If at an RPG processor, reinstall the Archive III Jaz disk.	Ensure the disk label indicates the processor where the backup was performed (RPG or MSCF), the current system software build, and the current date at a minimum. Return the disk to its holder and store the disk in a safe location.

CAUTION

A backup of this nature can not be made on one system processor (RPG, or MSCF) and later restored on a different processor. It should only be used for restorals on the same processor. Ensure the Jaz disk label indicates the processor on which this backup was made and use/label a separate Jaz disk cartridge for each processor.

22	At the # prompt, enter: **sync<CR>** **init 3<CR>**	This will perform an initialization to the multi–user mode (init level 3) and to a CDE Login screen. Return to normal operations as desired. Message concerning `http-8888 failed to start ...` is not critical.
23	If at an RPG processor, log into CDE and restart applications software per Table 4–42.	If at an RPG, applications software was stopped prior to performing this procedure.

4.6.4.6 Adaptation Data Backups. Table 4–63 provides the procedures for performing a backup of the RPG adaptation data to floppy at the RPG workstation. Backups of RPG adaptation data should be made after every permanent change to RPG adaptation data (communications configuration, algorithm parameters, etc.). This backup can be made with the RPG applications software running or shut down –– it doesn't matter.

Table 4–64 contains the the procedures for backing up MSCF adaptation data to floppy at the MSCF. In either case (Table 4–63 or Table 4–64), the procedure also indicates that adaptation data from one end (e.g., the RPG) could also be backed up at the other end (e.g., the MSCF). In this case, adaptation data is actually transferred from the RPG to the MSCF or the MSCF to the RPG using the Remote Services daemon. If this is done, when adaptation data is restored at either an RPG or MSCF, a floppy made in either location can be used at either location. The RPG or MSCF will always restore the correct file based on the file name. This provides redundancy of data should one of the two floppies becomes corrupted.

Table 4–63. Adaptation Data Backups at RPG Workstation

STEP	ACTION/PROCEDURE	RESPONSE/COMMENTS
	NOTE If there is a BDDS installed, Raritan user channel 1 (RPG) must be selected. Activate mouse and use the on–screen menus to login as **raritan<CR>** user (no password) or, if a screen saver is not active yet, hit the **<Scroll Lock>** key twice quickly to activate the on–screen menus. Then select the RPG user channel.	
1	At the RPG workstation within the RPGPCA cabinets, log into the CDE as a normal user.	
2	At the RPG Ultra 10 processor, insert a formatted floppy into the floppy drive. Ensure the floppy disk is not write protected and ensure this is a floppy which can be secured and retained for adaptation backup purposes.	The floppy can be formatted using a standard DOS based PC format program or by using the Sun's UNIX format utility.
3	At a normal user prompt, enter: **save_adapt_floppy<CR>** to start the RPG adaptation data backup. For FAA Redundant systems, this must be done on both channels.	"save_adapt_floppy" is a script program designed to backup the adaptation data to the floppy.

4	The program will indicate:
	`--->Saving Adaptation Data`
	`--->Insert a new floppy into the floppy drive`
	`--->Hit return when ready`
	
	At this point, enter:
	<CR>
		The program will mount the floppy and performs all necessary backup actions. It will take approximately 30 seconds for the backup to complete. At the end of the backup, the program will display the adaptation backup file name which was made on the floppy. The program will also unmount the floppy.

5	At the RPG(s), the adaptation data can also be backed up for an MSCF to the same floppy. This should be done to ensure redundancy of data should the prime floppy disk specifically made for a given unit becomes corrupted. At a normal user prompt, enter: **save_adapt_floppy –o mscf<CR>**	The backup is completed as indicated in step 4 above.
6	When the backup is complete, remove the floppy from the drive and label the contents on its disk label.	Ensure the disk label indicates the current system software build and current date at a minimum. Store the disk in a safe location.

Table 4–64. Adaptation Data Backups at MSCF Workstation

STEP	ACTION/PROCEDURE	RESPONSE/COMMENTS
1	At the MSCF workstation, log into the CDE as a normal user.	
2	At the MSCF Ultra 5 processor, insert a formatted floppy into the floppy drive. Ensure the floppy disk is not write protected and ensure this is a floppy which can be secured and retained for adaptation backup purposes.	The floppy can be formatted using a standard DOS based PC format program or by using the Sun's UNIX format utility.
3	At a normal user prompt, enter: **save_adapt_floppy<CR>** to start the MSCF adaptation data backup.	"save_adapt_floppy" is a script program designed to backup the adaptation data to the floppy.

4	The program will indicate:
	`--->Saving Adaptation Data`
	`--->Insert a new floppy into the floppy drive`
	`--->Hit return when ready`
	
	At this point, enter:
	<CR>
		The program will mount the floppy and performs all necessary backup actions. It will take approximately 30 seconds for the backup to complete. At the end of the backup, the program will display the adaptation backup file name which was made on the floppy. The program will also unmount the floppy.

5	At the MSCF, the adaptation data can also be backed up for an RPG (or RPGs if FAA redundant) to the same floppy. This should be done to ensure redundancy of data should the prime floppy disk specifically made for a given unit becomes corrupted. At a normal user prompt, enter: **save_adapt_floppy –o rpg1<CR>** If at an MSCF off of an FAA RPG, when this first RPG backup is completed, also enter: **save_adapt_floppy –o rpg2<CR>**	Each backup is completed as indicated in step 4 above.
6	When the backups are complete, remove the floppy from the drive and label the contents on its disk label.	Ensure the disk label indicates the current system software build and current date at a minimum. Store the disk in a safe location.

4.6.5 SOFTWARE RESTORALS

Software previously backed up using procedures found under section 4.6.4 can be restored using the procedures found within this paragraph. Restorals of this nature may be necessary after replacing the hard disk drive and/or reloading the operating system from CD–ROM.

NOTE

There is no longer any procedures designed to actually accomplish true "full system" backups or restorals. With the advent of CD software loads, it is easier and quicker to reload the software from the original load CD rather than restoring the entire system from a backup. After reloading from the original load CD, user accounts can be restored from backups, and in the case of the RPG or MSCF, it may be desired to restore applications software to restore site–unique adaptation data or other customization. However, in most cases, just a restoral of the RPG or MSCF adaptation data is all that is needed and it is unnecessary to restore applications software. No specific restoral procedure is provided for the BDDS applications software.

Index, Software Restorals

Procedure	Reference
System Software Restoral Using ufsrestore (Individual File System Example)	Table 4–65
RPG Applications Software Restoral	Table 4–66
MSCF Applications Software Restoral	Table 4–67
Restoral of RPG or MSCF User Account Directories Made Using tar	Table 4–68
Restoral of BDDS User Account Directories Made Using tar	Table 4–69
RPG Adaptation Data Restoral at RPG Workstation	Table 4–70
MSCF Adaptation Data Restoral at MSCF Workstation	Table 4–71

4.6.5.1 System Software Restoral Using ufsrestore (Individual File Systems). Table 4–65 provides the procedures for a partial restoration of the system software backup made using ufsdump (Table 4–58). In this procedure, individual file systems can be restored. As following the example provided in Table 4–58, this procedure will only show an example restoral of the /*export*/*home* directory.

SU

Table 4–65. System Software Restoral Using ufsrestore (Individual File System Example)

STEP	ACTION/PROCEDURE	RESPONSE/COMMENTS
	NOTE If this is being performed at the RPG workstation or BDDS workstation in the RPGPCA cabinet, Raritan user channel 1 (RPG) or user channel 2 (BDDS) must be selected as appropriate. Activate mouse and use the on–screen menus to login as **raritan<CR>** user (no password) or, if a screen saver is not active yet, hit the **<Scroll Lock>** key twice quickly to activate the on–screen menus. Then select the RPG or BDDS user channel as appropriate.	
1	For the RPG processor only, stop the applications software per Table 4–41.	This is necessary to be able to unmount and retrieve the Archive III Jaz disk prior to performing the backup.
2	Exit out of CDE by clicking **EXIT** on the CDE Control Panel and **OK** at the acknowledgement window.	Exits CDE. If not in CDE, proceed to the next step.
3	At the CDE Login screen, click and hold **Options** then select **Command Line Login**.	Will enable login as root outside of the CDE.
4	Enter a **<CR>**	Necessary to get to a Command Line Login prompt.
5	At the "*node_name* console login:" prompt, enter: **root<CR>** and then *root_password***<CR>** at the Password: prompt.	The remainder of this procedure must be performed as a Superuser. If root privileges are not allowed, contact the System Administrator for assistance with this procedure.
6	If at an RPG processor, then at the # prompt, enter: **umount /jaz<CR>** then press the button on the Jaz drive and remove the Archive III Jaz disk from the drive.	This unmounts the Archive III Jaz disk prior to performing the restoral. If not at an RPG processor, continue with the next step. If a `umount: /jaz not mounted` message occurs, it indicates that the Jaz disk cartridge is already unmounted.
7	At the # prompt, enter: **shutdown<CR>**	This will give all users a one minute notice of pending shutdown.

Table 4–65. System Software Restoral Using ufsrestore (Individual File System Example) – Continued

STEP	ACTION/PROCEDURE	RESPONSE/COMMENTS
8	At the `Do you want to continue? (y or n):` prompt, enter: **y<CR>**	Shuts down to single user mode.
9	At the `Type control-d to proceed with normal startup, (or give root password for system maintenance):` prompt, enter *root_password***<CR>** to continue.	Now at single–user mode.
10	At the # prompt, enter: **cd /export/home<CR>**	Places the user at the */export/home* directory.

NOTE

In this example, the */export/home* file system is being restored from a previous "ufsdump". This is an example only. If another file system is being restored, change to correct directory location in step 10:

/
/opt
/usr
/usr/openwin
/var

11	Insert the backup disk cartridge in the Jaz drive.	This should be the same cartridge that was used to make a backup using the "ufsdump" utility specified in Table 4–58.

CAUTION

A restoral of this nature should not be made with a Jaz disk cartridge used when the backup was performed on one of the other system processors (RPG, MSCF, or BDDS). Ensure that the Jaz disk cartridge used for this procedure contains the backup previously made on this processor.

12	At the # prompt, enter: **mkdir /jaz<CR>**	This only needs to be done once on the system unless the system software is fully reloaded. If a `File exists` error is displayed, it means that the */jaz* mount point directory already exists.

Table 4–65. System Software Restoral Using ufsrestore (Individual File System Example) – Continued

STEP	ACTION/PROCEDURE	RESPONSE/COMMENTS
	NOTE At the MSCF, a "jazmount" utility also exists which will automount the Jaz disk to a */jaz* mount point and this utility can be used in lieu of step 13. If used (**jazmount<CR>**), it does a file system check (fsck) on the disk and it will take approximately 30 seconds before the disk mount completes.	
13	Mount the disk cartridge as follows at the # prompt: **mount /dev/dsk/c1t3dØs2 /jaz<CR>**	As indicated by the note and examples at steps 19 through 25 of Table 4–75, the mount point directory name may be a different name if the user chooses to use a different name. In this example, the directory mount point name */jaz* is used. If a different name is used, that name (path) must be substituted for */jaz* for the remainder of this procedure.
14	At the # prompt, enter: **ufsrestore xvf /jaz/exp_home<CR>**	This will restore all files from the "exp_home" file on the Jaz disk cartridge (mounted at */jaz*) and place them on the */export/home* directory on the hard disk. Numerous `File exists` type messages will be noted if overwriting present files or numerous `Make node` type messages will be noted if the present file system is empty. Then the feedback states: `You have not read any volumes yet. Unless you know which volume your file(s) are on you should start with the last volume and work towards the first. Specify the next volume #:`
15	At the volume entry prompt, enter: **1<CR>**	The files are restored from the backup dump. When all files are restored, the feedback indicates: `Set directory mode, owner, and times. Set owner/mode for '.'? [yn].`

Table 4–65. System Software Restoral Using ufsrestore (Individual File System Example) – Continued

STEP	ACTION/PROCEDURE	RESPONSE/COMMENTS
16	At the `set owner/mode ...` prompt, enter **n<CR>**	If overwriting present directories, the feedback indicates: `Directories already exist, set modes anyway? [yn]`. Continue with the next step. If the present file system was empty prior to the restoral, this prompt will not be noted –– proceed to step 18.
17	At the `set modes anyway ...` prompt, enter **n<CR>**	Actual restoral of file system is complete.
18	At the # prompt, enter: **umount /jaz<CR>**	This unmounts the Jaz disk from the */jaz* mount point.
19	Press the button on the Jaz drive to eject the disk and remove the backup disk cartridge from the Jaz drive. If at an RPG processor, reinstall the Archive III Jaz disk.	Return the disk to its holder and store the disk in a safe location.
20	At the # prompt, enter: **sync<CR>** **init 6<CR>**	This will perform a complete system reinitialization and boot the system to a CDE Login screen. Return to normal operations as desired.
21	If at an RPG processor, log into CDE and restart applications software per Table 4–42. If at an MSCF processor, log into CDE and restart the MSCF applications per Table 4–46 and Table 4–47.	If at an RPG, applications software was stopped prior to performing this procedure.

4.6.5.2 RPG Applications Software Restoral. Table 4–66 provides the procedures for restoring the RPG software backup made using the procedures in Table 4–59.

SU

Table 4–66. RPG Applications Software Restoral

STEP	ACTION/PROCEDURE	RESPONSE/COMMENTS
	NOTE If this is being performed at the RPG workstation in the RPGPCA cabinet and there is a BDDS installed, Raritan user channel 1 (RPG) must be selected. Activate mouse and use the on–screen menus to login as **raritan<CR>** user (no password) or, if a screen saver is not active yet, hit the **<Scroll Lock>** key twice quickly to activate the on–screen menus. Then select the RPG user channel.	
1	Stop the applications software per Table 4–41.	This is necessary to be able to unmount and retrieve the Archive III Jaz disk prior to performing the backup.
2	Exit out of CDE by clicking **EXIT** on the CDE Control Panel and **OK** at the acknowledgement window.	Exits CDE. If not in CDE, proceed to the next step.
3	At the CDE Login screen, click and hold **Options** then select **Command Line Login**.	Will enable login as root outside of the CDE.
4	Enter a **<CR>**	Necessary to get to a Command Line Login prompt.
5	At the "*node_name* console login:" prompt, enter: **root<CR>** and then *root_password***<CR>** at the Password: prompt.	The remainder of this procedure must be performed as a Superuser. If root privileges are not allowed, contact the System Administrator for assistance with this procedure.
6	At the # prompt, enter: **umount /jaz<CR>** then press the button on the Jaz drive and remove the Archive III Jaz disk from the drive.	This unmounts the Archive III Jaz disk prior to performing the backup. If a `umount: /jaz not mounted` message occurs, it indicates that the Jaz disk cartridge is already unmounted.
7	At the # prompt, enter: **shutdown<CR>**	This will give all users a one minute notice of pending shutdown.
8	At the `Do you want to continue? (y or n):` prompt, enter: **y<CR>**	Shuts down to single user mode.

Table 4–66. RPG Applications Software Restoral – Continued

STEP	ACTION/PROCEDURE	RESPONSE/COMMENTS
9	At the `Type control-d to proceed with normal startup, (or give root password for system maintenance):` prompt, enter *root_password*<**CR**> to continue.	Now at single–user mode.
10	Insert the backup disk cartridge in the Jaz drive.	This should be the same cartridge that was used to make a backup of the applications software using the procedures specified by Table 4–59.
11	At the # prompt, enter: **mkdir /jaz<CR>**	This only needs to be done once on the system unless the system software is fully reloaded. If a `File exists` error is displayed, it means that the /*jaz* mount point directory already exists.

NOTE

At the MSCF, a "jazmount" utility also exists which will automount the Jaz disk to a /*jaz* mount point and this utility can be used in lieu of step 12. If used (**jazmount<CR>**), it does a file system check (fsck) on the disk and it will take approximately 30 seconds before the disk mount completes.

12	Mount the disk cartridge as follows at the # prompt: **mount /dev/dsk/c1t3dØs2 /jaz<CR>**	As indicated by the note and examples at steps 19 through 25 of Table 4–75, the mount point directory name may be a different name if the user chooses to use a different name. In this example, the directory mount point name /*jaz* is used. If a different name is used, that name (path) must be substituted for /*jaz* for the remainder of this procedure.
13	At the # prompt, change to the home directory of the current RPG software build: **cd /export/home/***home_dir***<CR>**	The home directory (*home_dir*) of the current software build is v*n.n*, where *.n.n* could be "1.0" or "1.13" for Open Build 1, "2.0" for Open Build 2, etc (as examples).
14	At the # prompt, enter: **tar xvf /jaz/rpgapps.tar<CR>**	This will extract all files in the "rpgapps.tar" file from the Jaz disk cartridge (mounted at /*jaz*) to the home directory. This process should only take approximately one minute and the system will return to a # prompt.

Table 4–66. RPG Applications Software Restoral – Continued

STEP	ACTION/PROCEDURE	RESPONSE/COMMENTS
15	At the # prompt, enter: **umount /jaz<CR>**	This unmounts the Jaz disk from the */jaz* mount point.
16	Press the button on the Jaz drive to eject the disk and remove the backup disk cartridge from the Jaz drive. Reinstall the Archive III Jaz disk.	Return the disk to its holder and store the disk in a safe location.
17	At the # prompt, enter: **sync<CR>** **init 3<CR>**	This will perform an initialization to the multi–user mode (init level 3) and to a CDE Login screen. Return to normal operations as desired. Message concerning `http-8888 failed to start ...` is not critical.
18	If this applications software that was just restored does not have the latest adaptation data (in place when applications backup was made), then restore RPG adaptation data IAW Table 4–70.	If it is unknown if the applications software backup contained the latest adaptation data, then perform the restoral of the RPG adaptation data regardless, as long as the RPG adaptation data backup is known to be current. All backup media should contain dates when the backup was made.
19	Log into CDE and restart RPG applications software per Table 4–42.	Applications software was stopped prior to performing this procedure.

4.6.5.3 MSCF Applications Software Restoral. Table 4–67 provides the procedures for restoring the RPG software backup made using the procedures in Table 4–60.

SU

Table 4–67. MSCF Applications Software Restoral

STEP	ACTION/PROCEDURE	RESPONSE/COMMENTS
1	Exit out of CDE by clicking **EXIT** on the CDE Control Panel and **OK** at the acknowledgement window.	Exits CDE. If not in CDE, proceed to the next step.
2	At the CDE Login screen, click and hold **Options** then select **Command Line Login**.	Will enable login as root outside of the CDE.
3	Enter a **<CR>**	Necessary to get to a Command Line Login prompt.

Table 4–67. MSCF Applications Software Restoral – Continued

STEP	ACTION/PROCEDURE	RESPONSE/COMMENTS
4	At the "*node_name* console login:" prompt, enter: **root<CR>** and then *root_password***<CR>** at the Password: prompt.	The remainder of this procedure must be performed as a Superuser. If root privileges are not allowed, contact the System Administrator for assistance with this procedure.
5	At the # prompt, enter: **shutdown<CR>**	This will give all users a one minute notice of pending shutdown.
6	At the `Do you want to continue? (y or n):` prompt, enter: **y<CR>**	Shuts down to single user mode.
7	At the `Type control-d to proceed with normal startup, (or give root password for system maintenance):` prompt, enter *root_password***<CR>** to continue.	Now at single–user mode.
8	Insert the backup disk cartridge in the Jaz drive.	This should be the same cartridge that was used to make a backup of the applications software using the procedures specified by Table 4–60.
9	At the # prompt, enter: **mkdir /jaz<CR>**	This only needs to be done once on the system unless the system software is fully reloaded. If a `File exists` error is displayed, it means that the /*jaz* mount point directory already exists.

NOTE

At the MSCF, a "jazmount" utility also exists which will automount the Jaz disk to a /*jaz* mount point and this utility can be used in lieu of step 10. If used (**jazmount<CR>**), it does a file system check (fsck) on the disk and it will take approximately 30 seconds before the disk mount completes.

10	Mount the disk cartridge as follows at the # prompt: **mount /dev/dsk/c1t3dØs2 /jaz<CR>**	As indicated by the note and examples at steps 19 through 25 of Table 4–75, the mount point directory name may be a different name the user chooses to use a different name. In this example, the directory mount point name /*jaz* is used. If a different name is used, that name (path) must be substituted for /*jaz* for the remainder of this procedure.

Table 4–67. MSCF Applications Software Restoral – Continued

STEP	ACTION/PROCEDURE	RESPONSE/COMMENTS
11	At the # prompt, change to the home directory of the current RPG software build: **cd /export/home/*home_dir*<CR>**	The home directory (*home_dir*) of the current software build is v*n.n*, where *.n.n* could be "1.0" or "1.13" for Open Build 1, "2.0" for Open Build 2, etc (as examples).
12	At the # prompt, enter: **tar xvf /jaz/mscfapps.tar <CR>**	This will extract all files in the "mscfapps.tar" file from the Jaz disk cartridge (mounted at /*jaz*) to the home directory. This process should only take approximately one minute and then the system will return to the system prompt.
13	At the # prompt, enter: **umount /jaz<CR>**	This unmounts the Jaz disk from the /*jaz* mount point.
14	Press the button on the Jaz drive to eject the disk and remove the backup disk cartridge from the Jaz drive.	Return the disk to its holder and store the disk in a safe location.
15	At the # prompt, enter: **sync<CR>** **init 3<CR>**	This will perform an initialization to the multi–user mode (init level 3) and to a CDE Login screen. Return to normal operations as desired. Message concerning `http-8888 failed to start ...` is not critical.
16	Log into CDE and restart the MSCF applications per Table 4–46 and Table 4–47.	Procedure complete.

4.6.5.4 Restoral of User Account Directories. User accounts can and will exist on all three processors. Either periodically, or possibly just prior to a full system software load, user account home directories on the processors may have been backed up using procedures specified in paragraph 4.6.4.5.

These procedures are only for restoring previous user account home directory data files to a temporary directory location should a user later need to retrieve old data following a software load. These particular restorals will not help to actually reestablish user accounts should they be lost because of an aborted full system software load or if a new processor or hard disk is installed. In these cases, previous user accounts must always be reestablished first IAW Table 4–83 following the full system software load. After previous user accounts are reestablished IAW Table 4–83 and these restorals are completed, then users can retrieve data from the temporary directory location to their new home directory.

Table 4–68 provides procedures for restoring RPG or MSCF user accounts backed–up using tar procedures as specified in Table 4–62 and these backups should exist on a Jaz disk cartridge. Table 4–69 provides procedures for restoring BDDS user accounts backed–up using tar procedures as specified in Table 4–61. Since the BDDS does not have a Jaz drive, the backup of these user accounts will exist as a compressed tar file on the RPG disk or the RPG's Jaz disk cartridge. These restoral procedures all assume that the user account directories will exist in the /*export*/*home* file system.

NOTE

The procedures are designed to stop user applications software if not already stopped. Therefore, these procedures should not be performed if system operation can not be impacted at this time.

SU

Table 4–68. Restoral of RPG or MSCF User Account Directories Made Using tar

STEP	ACTION/PROCEDURE	RESPONSE/COMMENTS
	NOTE If this is being performed at the RPG workstation in the RPGPCA cabinet and there is a BDDS installed, Raritan user channel 1 (RPG) must be selected. Activate mouse and use the on–screen menus to login as **raritan<CR>** user (no password) or, if a screen saver is not active yet, hit the **<Scroll Lock>** key twice quickly to activate the on–screen menus. Then select the RPG user channel.	
1	For the RPG processor only, stop the applications software per Table 4–41.	This is necessary to be able to unmount and retrieve the Archive III Jaz disk prior to performing the restoral.
2	Exit out of CDE by clicking **EXIT** on the CDE Control Panel and **OK** at the acknowledgement window.	Exits CDE. If not in CDE, proceed to the next step.
3	At the CDE Login screen, click and hold **Options** then select **Command Line Login**.	Will enable login as root outside of the CDE.
4	Enter a **<CR>**	Necessary to get to a Command Line Login prompt.
5	At the "*node_name* console login:" prompt, enter: **root<CR>** and then *root_password***<CR>** at the Password: prompt.	The remainder of this procedure must be performed as a Superuser. If root privileges are not allowed, contact the System Administrator for assistance with this procedure.

Table 4–68. Restoral of RPG or MSCF User Account Directories Made Using tar – Continued

STEP	ACTION/PROCEDURE	RESPONSE/COMMENTS
6	If at an RPG processor, then at the # prompt, enter: **umount /jaz<CR>** then press the button on the Jaz drive and remove the Archive III Jaz disk from the drive.	This unmounts the Archive III Jaz disk prior to performing the restoral. If not at an RPG processor, continue with the next step. If a `umount: /jaz not mounted` message occurs, it indicates that the Jaz disk cartridge is already unmounted.
7	At the # prompt, enter: **shutdown<CR>**	This will give all users a one minute notice of pending shutdown.
8	At the `Do you want to continue? (y or n):` prompt, enter: **y<CR>**	Shuts down to single user mode.
9	At the `Type control-d to proceed with normal startup, (or give root password for system maintenance):` prompt, enter *root_password***<CR>** to continue.	
10	At the # prompt, enter: **cd /export/home<CR>**	Places the user at the */export/home* directory which is the file system for all user accounts.
11	At the # prompt, enter: **mkdir tmp<CR>**	Makes a temporary directory */export/home/tmp*
12	At the # prompt, enter: **cd tmp<CR>**	Changes to the */export/home/tmp* directory. All user accounts will be restored to this temporary directory.
13	Insert the disk cartridge with the latest backup of RPG user accounts in the Jaz drive.	This should be the last backup disk cartridge that was made either on some periodic basis or possibly just prior to a full system software load.

CAUTION

A restoral of this nature should not be made with a Jaz disk cartridge used when the backup was performed on one of the other system processors (RPG or MSCF). Ensure that the Jaz disk cartridge used for this procedure contains the backup previously made on this processor.

Table 4–68. Restoral of RPG or MSCF User Account Directories Made Using tar – Continued

STEP	ACTION/PROCEDURE	RESPONSE/COMMENTS
14	At the # prompt, enter: **mkdir /jaz<CR>**	This only needs to be done once on the system unless the system software is fully reloaded. If a `File exists` error is displayed, it means that the /*jaz* directory already exists.
	NOTE At the MSCF, a "jazmount" utility also exists which will automount the Jaz disk to a /*jaz* mount point and this utility can be used in lieu of step 15. If used (**jazmount<CR>**), it does a file system check (fsck) on the disk and it will take approximately 30 seconds before the disk mount completes.	
15	Mount the disk cartridge as follows at the # prompt: **mount /dev/dsk/c1t3dØs2 /jaz<CR>**	As indicated by the note and examples at steps 19 through 25 of Table 4–75, the mount point directory name may be a different name if the user chooses to use a different name. In this example, the directory mount point name /*jaz* is used. If a different name is used, that name (path) must be substituted for /*jaz* for the remainder of this procedure.
16	At the # prompt, enter: **ls –l /jaz<CR>**	Verify that this Jaz disk cartridge has the latest backup of the RPG's user accounts ("users.tar"). If at an RPG processor, also note if a "bdds_users.tar.Z" file exists. If it does, this tar file will be individually copied in step 19.
17	At the # prompt, enter: **pwd**	Verify that `/export/home/tmp` is displayed as the current directory.
18	At the # prompt, enter: **tar xvf /jaz/users.tar<CR>**	This will extract all user account directories in the "users.tar" file to the current directory (/*export*/*home*/*tmp*). This process could take up a few minutes depending on the number of user accounts on the system. If a "bdds_users.tar.Z" file existed in step 16, perform the next step. Otherwise, proceed to step 20.

Table 4–68. Restoral of RPG or MSCF User Account Directories Made Using tar – Continued

STEP	ACTION/PROCEDURE	RESPONSE/COMMENTS
19	At the # prompt, enter: **cp /jaz/bdds_users.tar.Z . <CR>**	This will individually copy the compressed backup of the BDDS user accounts (”bdds_users.tar.Z”) from the Jaz disk cartridge to the current directory (/*export*/*home*/*tmp*).
20	At the # prompt, enter: **umount /jaz<CR>**	This unmounts the Jaz disk from the /*jaz* mount point.
21	Press the button on the Jaz drive to eject the disk and remove the backup disk cartridge from the Jaz drive. If at an RPG processor, reinstall the Archive III Jaz disk.	Return the backup disk to its holder and store the disk in a safe location.
22	At the # prompt, enter: **ls –l | more<CR>** Use the spacebar to advance a one full screen at a time, or the **<CR>** to advance a line at a time.	If this restoral of user accounts was just accomplished after a new system software load, the restored user account directories should show correct ownership by its original owner because user account IDs and passwords are retained across a full system software load. On the other hand, if this restoral follows replacement of the processor or fixed disk, the user account directories will either just show the previous ID numbers for ownership or may show an incorrect owner if the new accounts were not established with the same IDs previously used for each user. Regardless, since all users belong to the rpg group, they will still be able to copy restored data in from their old account directories (step 25 below).
23	At the # prompt, enter: **sync<CR>** **init 3<CR>**	This will perform an initialization to the multi–user mode (init level 3) and to a CDE Login screen. Return to normal operations as desired. Message concerning “http–8888 failed to start ...” is not critical.

Table 4–68. Restoral of RPG or MSCF User Account Directories Made Using tar – Continued

STEP	ACTION/PROCEDURE	RESPONSE/COMMENTS
24	If at an RPG processor, restart applications software per Table 4–42.	If at an RPG, applications software was stopped prior to performing this procedure.
25	Inform all users that their previous account directories were restored to /export/home/tmp/*user_name*. Inform the users that they can copy any of their previous data files from their directory in /export/home/tmp to their directory in /export/home except for the .cshrc file if this was just accomplished after a full system load or applications software load which contained a new revision of applications software (e.g., v1.5 to v1.12 or v1.5 to v2.0).	Following a full system or applications software load that includes a new revision of applications software, some files may contain new environment variables critical to the user being able to access the applications software. This is true of the .cshrc file and that particular file should never to overwritten with an old file. On the other hand, that file may still be valid if this restoral was just accomplished following replacement of the processor or fixed disk and the backup was made with the latest applications installed.

SU

Table 4–69. Restoral of BDDS User Account Directories Made Using tar

STEP	ACTION/PROCEDURE	RESPONSE/COMMENTS
	NOTE If this is being performed at the BDDS workstation installed in RPGPCA cabinet, Raritan user channel 2 (BDDS) must be selected. Activate mouse and use the on–screen menus to login as the **raritan<CR>** user (no password) or, if a screen saver is not active yet, hit the **<Scroll Lock>** key twice quickly to activate the on–screen menus. Then select the BDDS user channel.	
1	Exit out of CDE by clicking **EXIT** on the CDE Control Panel and **OK** at the acknowledgement window.	Exits CDE. If not in CDE, proceed to the next step.
2	At the CDE Login screen, click and hold **Options** then select **Command Line Login**.	Will enable login as root outside of the CDE.
3	Enter a **<CR>**	Necessary to get to a Command Line Login prompt.

Table 4–69. Restoral of BDDS User Account Directories Made Using tar – Continued

STEP	ACTION/PROCEDURE	RESPONSE/COMMENTS
4	At the "*node_name* console login:" prompt, enter: **root<CR>** and then *root_password***<CR>** at the Password: prompt.	The remainder of this procedure must be performed as a Superuser. If root privileges are not allowed, contact the System Administrator for assistance with this procedure.

NOTE

The BDDS does not have a Jaz drive and if a backup of the BDDS user accounts exists, it is assumed this backup exists at the RPG processor as well as the RPG's Jaz drive assuming Table 4–62 was accomplished after the BDDS user account backup file was shipped to the RPG (Table 4–61). If system software was just reloaded on all systems, then perform restoral of the RPG's user accounts (Table 4–68) prior to continuing with this procedure. Steps 5 through 11 are for shipping the backup file of the BDDS user accounts from the RPG back to the BDDS.

5	At the # prompt, enter: **cd /export/home<CR>**	Changes to the normal directory location for user accounts.
6	At the # prompt, enter: **ftp rpg<CR>**	Establishes a FTP session from the BDDS to the RPG.
7	When prompted, enter: **root<CR>** and then enter the RPG's *root_password***<CR>** at the Password: prompt.	This will log the user into the RPG with root privileges.
8	At the `ftp>` prompt, enter: **cd /export/home/tmp<CR>**	At this point, the change directory command (cd) is actually occurring at RPG, but being commanded from the BDDS.
9	At the `ftp>` prompt, enter: **ls –l<CR>**	Verify if the file "bdds_users.tar.Z" exists. If not, perform Table 4–68 prior to continuing (omit step 18 if RPG user accounts do not need extraction). If the file does not exist at the RPG or on the RPG's Jaz disk cartridge, then previous BDDS user account directories are lost and must be recreated. If this is the case, this procedure can not be continued and is complete (enter **quit<CR>** to terminate the FTP session.

Table 4–69. Restoral of BDDS User Account Directories Made Using tar – Continued

STEP	ACTION/PROCEDURE	RESPONSE/COMMENTS
10	At the `ftp>` prompt, enter: **get bdds_users.tar.Z<CR>**	Ships the "bdds_users.tar.Z" file from the RPG's /*export*/*home*/*tmp* directory to the BDDS's /*export*/*home* directory. This process should take no more than one minute.
11	At the `ftp>` prompt, enter: **quit<CR>**	Quits the FTP session.
12	At the BDDS # prompt, enter: **shutdown<CR>**	This will give all users a one minute notice of pending shutdown.
13	At the `Do you want to continue? (y or n):` prompt, enter: **y<CR>**	Shuts down to single user mode.
14	At the `Type control-d to proceed with normal startup, (or give root password for system maintenance):` prompt, enter *root_password***<CR>** to continue.	Now at single–user mode.
15	At the # prompt, enter: **cd /export/home<CR>**	Places the user at the /*export*/*home* directory which is the file system for all user accounts.
16	At the # prompt, enter: **ls –l | more<CR>** Use the spacebar to advance a one full screen at a time, or the <CR> to advance a line at a time.	Verify that the file "bdds_users.tar.Z" exists in /*export*/*home* directory.
17	At the # prompt, enter: **mkdir tmp<CR>**	Makes a temporary directory /*export*/*home*/*tmp*
18	At the # prompt, enter: **mv bdds_users.tar.Z tmp<CR>**	Moves the "bdds_users.tar.Z" to the /*export*/*home*/*tmp* directory.
19	At the # prompt, enter: **cd tmp<CR>**	Changes to the /*export*/*home*/*tmp* directory. All user accounts will be restored to this temporary directory.
20	At the # prompt, enter: **ls –l<CR>**	Verify that the file "bdds_users.tar.Z" exists in /*export*/*home*/*tmp* directory.
21	At the # prompt, enter: **uncompress bdds_users.tar.Z<CR>**	Uncompresses the file and makes a "bdds_users.tar" file.

Table 4–69. Restoral of BDDS User Account Directories Made Using tar – Continued

STEP	ACTION/PROCEDURE	RESPONSE/COMMENTS
22	At the # prompt, enter: **tar xvf bdds_users.tar<CR>**	This will extract all user account directories in the "bdds_users.tar" file to the current directory (/*export*/*home*/*tmp*). This process could take a few minutes depending on the number of user accounts on the system.
23	At the # prompt, enter: **ls –l | more<CR>** Use the spacebar to advance a one full screen at a time, or the <CR> to advance a line at a time.	If this restoral of user accounts was just accomplished after a new system software load, the restored user account directories should show correct ownership by its original owner because user account IDs and passwords are retained across a full system software load. On the other hand, if this restoral follows replacement of the processor or fixed disk, the user account directories will either just show the previous ID numbers for ownership or may show an incorrect owner if the new accounts were not established with the same IDs previously used for each user. Regardless, since all users belong to the rpg group, they will still be able to copy restored data in from their old account directories (step 25 below).
24	At the # prompt, enter: **sync<CR>** **init 3<CR>**	This will perform an initialization to the multi–user mode (init level 3) and to a CDE Login screen. BDDS applications software will auto–start. Message concerning "http–8888 failed to start ..." is not critical.
25	Inform all users that their previous account directories were restored to /export/home/tmp/*user_name*. Inform the users that they can copy any of their previous data files from their directory in /export/home/tmp to their directory in /export/home except for the .cshrc file(s) if this was just accomplished after a full system load that included a new revision of BDDS software.	Following a full system load that includes a new revision of BDDS software, some files may contain new environment variables critical to the user being able to access the applications software. This is true of the .cshrc file and that particular file should never be overwritten with an old file. On the other hand, that file may still be valid if this restoral was just accomplished following replacement of the processor or fixed disk and the backup was made with the latest BDDS software installed.

4.6.5.5 Adaptation Data Restorals. Table 4–70 provides the procedures for restoring the RPG adaptation data at the RPG workstation from a floppy made using the procedures in either Table 4–63 or Table 4–64. This restoral can be made with the applications software running or shut down; however, if done with the applications running, the restored adaptation data will not take affect until the applications software is shutdown (stop) and restarted (start).

Table 4–71 provides the procedures for restoring the MSCF adaptation data at the MSCF workstation from a floppy made using the procedures in either Table 4–63 or Table 4–64. Following restoral of the adaptation data at the MSCF workstation, the user must log out of the CDE and then log back in to get the adaptation data to take affect.

Table 4–70. RPG Adaptation Data Restoral at RPG Workstation

STEP	ACTION/PROCEDURE	RESPONSE/COMMENTS
	NOTE If a BDDS workstation is installed in the RPGPCA cabinet, Raritan user channel 1 (RPG) must be selected. Activate mouse and use the on–screen menus to login as the **raritan<CR>** user (no password) or, if a screen saver is not active yet, hit the **<Scroll Lock>** key twice quickly to activate the on–screen menus. Then select the RPG user channel.	
1	At the RPG workstation within the RPGPCA cabinets, log into the CDE as a normal user.	
2	At the RPG Ultra 10 processor, insert the floppy with the backup adaptation data into the floppy drive.	Ensure this is the latest copy unless the latest backup is not desired.
3	At a normal user prompt, enter: **restore_adapt_floppy<CR>** to start the RPG adaptation data restoral.	"restore_adapt_floppy" is a script program designed to restore the adaptation data from the floppy.

4	The program will indicate:
	`--->Restoring from Floppy`
	`--->Insert the adaptation backup floppy into the floppy drive`
	`--->Hit return key when ready`
	
	At this point, enter:
	<CR>
		The program will mount the floppy and performs all necessary restoral actions. It will take approximately 30 seconds for the restoral to complete. At the end, the program will indicate that the restoral of the adaptation data was complete. The program will also unmount the floppy.

5	When the restoral is complete, remove the floppy from the drive.	Store the disk in a safe location. The restored adaptation data will not take affect until the applications software is shutdown (stop) and restarted (start).

Table 4–71. MSCF Adaptation Data Restoral at MSCF Workstation

STEP	ACTION/PROCEDURE	RESPONSE/COMMENTS
1	At the MSCF workstation, log into the CDE as a normal user.	
2	At the MSCF Ultra 5 processor, insert the floppy with the backup adaptation data into the floppy drive.	Ensure this is the latest copy unless the latest backup is not desired.
3	At a normal user prompt, enter: **restore_adapt_floppy<CR>** to start the RPG adaptation data restoral.	"restore_adapt_floppy" is a script program designed to restore the adaptation data from the floppy. Although this is considered RPG adaptation data, it will work at the MSCF also. Only a small subset of the data is actually used at the MSCF.

4	The program will indicate:
	`--->Restoring from Floppy`
	`--->Insert the adaptation backup floppy into the floppy drive`
	`--->Hit return key when ready`
	
	At this point, enter:
	<CR>
		The program will mount the floppy and performs all necessary restoral actions. It will take approximately 30 seconds for the restoral to complete. At the end, the program will indicate that the restoral of the adaptation data was complete. The program will also unmount the floppy.

5	When the restoral is complete, remove the floppy from the drive.	Store the disk in a safe location. The restored adaptation data will not take affect until the user logs out and then back into the CDE.

4.6.6 MISCELLANEOUS LOAD/SETUP PROCEDURES

Table 4–72 is used for ensuring the MSCF Dial Modem card is properly configured to accept calls. Table 4–73 is used for creating a file system on the Jaz Disk cartridges used for either Archive III or backup purposes. Table 4–76 is for loading the serial card driver for the serial cards used in the RPG processor only (only if required because of possible software driver corruption). Table 4–77 is used to set the current date and time of the system. GMT is used. All of these procedures must be performed as a Superuser.

Index, Miscellaneous Load/Setup Procedures

Procedure	Reference
MSCF Dial Modem Setup	Table 4–72
Jaz Drive Disk Format and Mounting for Archive III (Preferred Method)	Table 4–73
Jaz Drive Disk Format and Mounting for Archive III (Alternate Method)	Table 4–74
Jaz Drive Disk Format and Mounting for Backup Purposes	Table 4–75
Magma Four/Eight Port Serial Card Driver Load	Table 4–76
Date/Time Set Process	Table 4–77

4.6.6.1 MSCF Dial Modem Setup. Table 4–72 is used for ensuring the MSCF Dial Modem card within the MSCF processor is properly configured to accept calls.

SU

Table 4–72. MSCF Dial Modem Setup

STEP	ACTION/PROCEDURE	RESPONSE/COMMENTS
1	At a normal user prompt, enter: **su<CR>** and then *root_password*<CR> at the Password: prompt. If already at a Superuser level, then proceed to the next step.	If root privileges are not allowed, contact the System Administrator for assistance with this procedure.
2	At the # prompt, enter: **/etc/init.d/ppp stop<CR>**	If the Solstice PPP is already running, this stops the PPP so that communication to the modem can be established.
3	At the # prompt, enter: **tip –96ØØ /dev/cua/d<CR>** Feedback: `connected`	Establishes a Terminal Emulation Program (tip) session to the modem. This will allow the user to set further modem options using a Hayes–compatible AT command set.
4	Enter: **at <CR>**	The modem should respond with an `OK`.
5	Enter: **at&fØ<CR** **atsØ=1<CR>**	Selects the default option set and sets the modem to answer on ring 1.
6	Enter: **at&w<CR>**	Saves the settings to profile 0 which is the default option set.

Table 4–72. MSCF Dial Modem Setup – Continued

STEP	ACTION/PROCEDURE	RESPONSE/COMMENTS
7	Enter **~.** (”tilde”, “dot” with no <CR>) Feedback: `[EOT]`	This is the escape sequence for ending a tip session. If not returned to a prompt, enter the escape sequence again. The modem should be ready to accept and answer dial–in calls.
8	At the # prompt, enter: **sync<CR>** **init 6<CR>**	Syncs the file system and reboots the system. Solstice PPP will restart with the modem setting in place.

4.6.6.2 Jaz Drive Disk Format and Mount. Table 4–73 is designed for “formatting” a Jaz disk cartridge that could be used for Archive III purposes (NWS only). In most cases, this only involves creating a new file system (newfs) on the disk cartridge but some cartridges may require a complete format. This procedure also discusses the desired sequence of events that should occur when an on–line RPG Archive III disk cartridge is full and it must be replaced. To be able to replace the on–line disk cartridge and not loose any Archive III data, the cartridge must be changed–out within a 12 minute period. Therefore, this procedure is written to always format disk cartridges ahead of time at an MSCF workstation and then replace them as needed at the RPGPCA. This is the preferred method.

However, if no pre–formatted disks are available for Archive III, the MSCF workstation Jaz drive is non–operational, and a new Archive III disk cartridge is needed immediately (full disk cartridge), a Jaz disk cartridge can be formatted and mounted for Archive III at the RPG workstation without any significant impact on operations (with exception of a possible loss of recorded Archive III data if not done within 12 minutes). Table 4–74 provides the procedures for this alternate method.

Table 4–75 is designed for formatting a Jaz disk cartridge for backup purposes. This procedure also provides an example on use of mount points for mounting the disk cartridge when doing backups. For NWS sites, it is always assumed that the format portion of this procedure would be performed at an MSCF workstation so that Archive III operations are not impacted at the RPGPCA. On the other hand, since DoD and FAA sites will not normally have an MSCF and do not have Archive III active, personnel at these sites would perform this procedure at the RPG workstation in the RPGPCA.

SU

Table 4–73. Jaz Drive Disk Format and Mounting for Archive III (Preferred Method)

STEP	ACTION/PROCEDURE	RESPONSE/COMMENTS
	NOTE The format portion of this procedure is performed at the MSCF workstation so that Archive III operations at the RPGPCA are not impacted. Disk cartridges can be formatted ahead of time at the MSCF workstation and this is the preferred method. If for some reason this can not be performed at the MSCF workstation, a new Archive III disk is really needed at the RPGPCA (full Archive III disk cartridge), and a new formatted disk cartridge is not available, proceed to Table 4–74 (alternate method). The start of this procedure assumes a normal user is logged into the MSCF workstation and at least one terminal or console window is open.	
1	At an MSCF workstation normal user prompt, enter: **su<CR>**, and then *root_password***<CR>** at the Password: prompt.	If root privileges are not allowed, contact the System Administrator for assistance with this procedure.
2	If a disk cartridge is presently in the MSCF workstation Jaz drive, then press the button on the Jaz drive and remove the disk cartridge from the drive.	Set this disk cartridge aside pending completion of this procedure.
3	Insert a blank Jaz 2GB disk cartridge in the drive.	Each disk cartridge must be formatted individually.
4	At the # prompt, enter: **newfs –iv /dev/rdsk/c1t3d5885 –f 4Ø96 –v /dev/rdsk/ c1t3dØs2s2<C<CR>** When prompted, enter: **y<CR>** to continue.	This creates a new file system on the Jaz disk cartridge (approximately 45 seconds). This is only necessary one time for each Jaz disk cartridge. This is basically a high–level format.
	NOTE Steps 5 through 10 are normally not necessary. If step 4 completed successfully, proceed to step 11.	
5	At the # prompt, enter: **format –e<CR>**	Enters the Solaris format utility. Only perform steps 5 through 10 if step 4 did not complete successfully.

Table 4–73. Jaz Drive Disk Format and Mounting for Archive III (Preferred Method) – Continued

STEP	ACTION/PROCEDURE	RESPONSE/COMMENTS
6	At the `AVAILABLE DISK SELECTIONS:` window, enter the number shown for the Jaz drive disk (shown as "c1t3dØ") and press **<CR>**. If the system prompts for "Type", enter the number from the list for a `Jaz 2GB` and press **<CR>**.	Selects the Jaz disk to format. The "Type" prompt may or may not occur depending on if the Sun can or can not recognize any part of the previous low–level format.
7	At the `FORMAT MENU, format>` prompt, enter: **format<CR>**, and when prompted, enter: **y<CR>** to continue.	Formats the disk. <u>This process will take approximately 1.5 hours</u>. At approximately the one hour point, it will indicate "verifying media ..., pass 0 – pattern xxxxxxxx". Wait for "pass 1 – pattern yyyyyyyy" to appear before proceeding.
8	When the media verification indicates "pass 1 – pattern yyyyyyyy", enter: **<Ctrl–C>** and then a **<CR>**	Aborts the remaining media verification. "pass 0" has already completed successfully.
9	At the `FORMAT MENU, format>` prompt, enter: **quit<CR>**	Exits the format program.
10	At the # prompt, enter: **newfs –i 5885 –f 4Ø96 –v /dev/rdsk/c1t3dØs2<CR>newfs –v /dev/rdsk/c1t3dØs2<CR>** When prompted, enter: **y<CR>** to continue.	This creates a new file system for the Jaz disk (approximately 45 seconds). This is only necessary one time for each Jaz disk cartridge. This is basically a high–level format.
11	At the # prompt, enter: **jazmount<CR>**	jazmount is a script which will mount the Jaz disk to the */jaz* mount point, update the group ID, and update the permissions for the mount point (approximately 20 seconds). At the same time, it actually writes the new group ID and permissions to the disk cartridge. This is important to later get the RPG applications software to recognize a new disk without having to reboot the RPG processor. The script also displays a file listing of what presently exists on the disk cartridge. At this point, the only listing should be for a "lost+found" directory.

Table 4–73. Jaz Drive Disk Format and Mounting for Archive III (Preferred Method) – Continued

STEP	ACTION/PROCEDURE	RESPONSE/COMMENTS
12	At the # prompt, enter: **umount /jaz<CR>**	Unmounts the Jaz disk cartridge (/dev/dsk/c1t3dØs2) from the mount point (/*jaz*). The system will not allow an unmount when "at" the mount point (/*jaz*) or any of its subdirectories. If necessary, "cd" to a different directory location.
13	At the # prompt, enter: **mount<CR>**	There should be no line showing a mount for "/jaz on /dev/dsk/c1t3dØs2 ...". This proves the Jaz disk did correctly unmount. If it is still mounted, repeat step 12.
14	Press the button on the Jaz drive to eject the disk cartridge and store it in its original holder.	Label the disk and the holder for its intended purpose (e.g., "Archive Level III, Start – _____"). If needing to format more Archive III Jaz disk cartridges, repeat steps 3 through 14 as necessary.
15	At the # prompt, enter: **exit<CR>**	Exits Superuser mode. The formatting portion of this procedure is complete. Steps 16 through 21 provide the desired sequence of events that should occur when an on–line RPG Archive III disk cartridge is full and it must be replaced. These steps are provided for reference only at this point and can be used when needed. Otherwise, this procedure is complete.

NOTE

Steps 16 through 21 provide the desired sequence of events that should occur when an on–line RPG Archive III disk cartridge is full and it must be replaced. These steps assume that a normal user is logged in at the MSCF workstation and an RPG HCI is displayed.

16	On the RPG HCI at the MSCF workstation, click the **Archive Products** button (below RPG container).	Opens the `Archive III Control/Status` window.

Table 4–73. Jaz Drive Disk Format and Mounting for Archive III (Preferred Method) – Continued

STEP	ACTION/PROCEDURE	RESPONSE/COMMENTS
17	On the `Archive III Control/Status` window, verify if either `Auto Products` or `Auto Status` is Active in the `Archive III Status` area of the window. If either are Active, put it in a pause state using the Pause radial button in the `Auto Archive Control/Status` area of the window. If the present Jaz disk cartridge was already completely full, auto archive status should already be paused.	The Jaz disk cartridge can not be unmounted if any Archive III function is active.
18	On the `Archive III Control/Status` window, click the **Unmount Disk** button.	After about 15 seconds, the main Archive III status (upper right of window) should change to `Not Mounted`. At the same time, the Jaz disk cartridge is actually ejected from the Jaz drive in the RPGPCA cabinets.
19	Take a new formatted Jaz disk cartridge to the RPGPCA. In the left cabinet, remove the ejected Jaz disk cartridge and install the new disk cartridge.	The Jaz disk activity light should blink several times while the disk is spun up and remounted. Return to the MSCF workstation.
20	At the MSCF workstation on the `Archive III Control/Status` window, verify that the main Archive III status (upper right of window) has returned to an `Paused` state.	This indicates that the disk did correctly mount and the applications software recognizes that a good disk is installed.
21	On the `Archive III Control/Status` window, use the Record radial button in the `Auto Archive Control/Status` area of the window to return either Products or Status to an Auto Archive state (as previously noted in step 17.	Normal Archive III auto archive functionality is now active. Close the `Archive III Control/Status` window if desired. This portion of the procedure is complete (desired sequence of events that should occur when an on–line RPG Archive III disk cartridge is full and it must be replaced).

SU

Table 4–74. Jaz Drive Disk Format and Mounting for Archive III (Alternate Method)

STEP	ACTION/PROCEDURE	RESPONSE/COMMENTS
	NOTE This table provides a contingency procedure if for some reason the disk format can not be performed at the MSCF workstation (Table 4–73), a new Archive III disk is really needed at the RPGPCA (full Archive III disk cartridge), and a new formatted disk cartridge is not available (NWS only). In this case, everything is done at the RPG workstation within the RPGPCA.	
	NOTE At the RPG workstation in the RPGPCA, Raritan user channel 1 (RPG) must be selected. Activate mouse and use the on–screen menus to login as **raritan<CR>** user (no password) or, if a screen saver is not active yet, hit the **<Scroll Lock>** key twice quickly to activate the on–screen menus. Then select the RPG user channel.	
1	At the RPG workstation in the RPGPCA, log into the CDE as a normal user.	
2	In the CDE at a normal user prompt in a terminal window, enter: **hci&<CR>**	RPG HCI opens.
3	On the RPG HCI, click the **Archive Products** button (below RPG container).	Opens the `Archive III Control/Status` window.
4	On the `Archive III Control/Status` window, verify if either `Auto Products` or `Auto Status` is Active in the `Archive III Status` area of the window. If either are Active, put it in a pause state using the Pause radial button in the `Auto Archive Control/Status` area of the window. If the present Jaz disk cartridge was already completely full, auto archive status should already be paused.	The Jaz disk cartridge can not be unmounted if any Archive III function is active.
5	On the `Archive III Control/Status` window, click the **Unmount Disk** button.	After about 15 seconds, the main Archive III status (upper right of window) should change to `Not Mounted`. At the same time, the Jaz disk cartridge is actually ejected from the Jaz drive.

Table 4–74. Jaz Drive Disk Format and Mounting for Archive III (Alternate Method) – Continued

STEP	ACTION/PROCEDURE	RESPONSE/COMMENTS
6	Remove the ejected Jaz disk cartridge and install the new unformatted disk cartridge.	The Jaz disk activity light should blink several times while the disk is spun up.
7	At a normal user prompt, enter: **su<CR>** and then *root_password***<CR>** at the Password: prompt.	If root privileges are not allowed, contact the System Administrator for assistance with this procedure.
8	At the # prompt, enter: **newfs –i 5885 –f 4Ø96 –v /dev/rdsk/c1t3dØs2<CR>newfs –v /dev/rdsk/c1t3dØs2<CR>** When prompted, enter: **y<CR>** to continue.	This creates a new file system on the Jaz disk cartridge (approximately 45 seconds). This is only necessary one time for each Jaz disk cartridge. This is basically a high–level format.

NOTE

Steps 9 through 14 are normally not necessary. If step 8 completed successfully, proceed to step 15.

9	At the # prompt, enter: **format –e<CR>**	Enters the Solaris format utility. Only perform steps 5 through 10 if step 4 did not complete successfully.
10	At the `AVAILABLE DISK SELECTIONS:` window, enter the number shown for the Jaz drive disk (shown as "c1t3dØ") and press **<CR>**. If the system prompts for "Type", enter the number from the list for a `Jaz 2GB` and press **<CR>**.	Selects the Jaz disk to format. The "Type" prompt may or may not occur depending on if the Sun can or can not recognize any part of the previous low–level format.
11	At the `FORMAT MENU, format>` prompt, enter: **format<CR>** and when prompted, enter: **y<CR>** to continue.	Formats the disk. <u>This process will take approximately 1.5 hours</u>. At approximately the one hour point, it will indicate "verifying media ..., pass 0 – pattern xxxxxxxx". Wait for "pass 1 – pattern yyyyyyyy" to appear before proceeding.
12	When the media verification indicates "pass 1 – pattern yyyyyyyy", enter: **<Ctrl–C>** and then a **<CR>**	Aborts the remaining media verification. "pass 0" has already completed successfully.
13	At the `FORMAT MENU, format>` prompt, enter: **quit<CR>**	Exits the format program.

Table 4–74. Jaz Drive Disk Format and Mounting for Archive III (Alternate Method) – Continued

STEP	ACTION/PROCEDURE	RESPONSE/COMMENTS
14	At the # prompt, enter: **newfs –i 5885 –f 4Ø96 –v /dev/rdsk/c1t3dØs2<CR>newfs –v /dev/rdsk/c1t3dØs2<CR>** When prompted, enter: **y<CR>** to continue.	This creates a new file system for the Jaz disk (approximately 45 seconds). This is only necessary one time for each Jaz disk cartridge. This is basically a high–level format.

NOTE

At an RPG, an automounting program runs that automatically mounts the Jaz disk to a */jaz* mount point directory. This automount program will mount the disk when the RPG applications software is running for Archive III purposes (NWS sites only). For all sites, if the disk was not already mounted, any attempt to access the */jaz* directory at an RPG (e.g., "cd /jaz" or "ls –l /jaz") would also automount the Jaz disk to the */jaz* mount point directory.

15	At the # prompt, enter: **mount<CR>**	Displays all mounted devices. Near the bottom of the listing, a line should show that "/jaz on /dev/dsk/c1t3dØs2 ...". Because the applications software is still running, this mount actually occurs as soon as the new file system (newfs) is installed on the disk cartridge.
16	At the # prompt, enter: **chgrp rpg /jaz<CR>** **chmod 775 /jaz<CR>**	The "rpg" group is assigned so that all users of that group can access the */jaz* directory (actual disk cartridge) and the "775" permissions adds write access for the rpg group. At this point with the new group and permissions, the RPG applications software should also automatically recognize that new formatted disk cartridge is available for Archive III purposes.

Table 4–74. Jaz Drive Disk Format and Mounting for Archive III (Alternate Method) – Continued

STEP	ACTION/PROCEDURE	RESPONSE/COMMENTS
17	On the `Archive III Control/Status` window, verify that the main Archive III status (upper right of window) returns to an `Paused` state (approximately 10 to 15 seconds).	This indicates that the disk did correctly mount and the applications software recognizes that a good disk is installed.
18	On the `Archive III Control/Status` window, use the Record radial button in the `Auto Archive Control/Status` area of the window to return either Products or Status to an Auto Archive state (as previously noted in step 4.	Normal Archive III functionality is now active. Exit out of the CDE.

SU

Table 4–75. Jaz Drive Disk Format and Mounting for Backup Purposes

STEP	ACTION/PROCEDURE	RESPONSE/COMMENTS
	NOTE For NWS sites, always perform the format portion of this procedure at an MSCF workstation so that RPG Archive III operations are not impacted. If these formatted disk cartridges are eventually used at an NWS RPG workstation for backups, it would only be during scheduled downtime (e.g., before new software loads). For DoD and FAA RDA/RPG shelter sites, an MSCF workstation would not normally be available locally and these RPGs do not have Archive III active. For these sites, DoD and FAA personnel can format these disk cartridges at the RPG workstation in the RPGPCA and normal operations will not be impacted. The start of this procedure assumes a normal user is logged into the CDE at the workstation in use.	
1	At a normal user prompt, enter: **su<CR>** and then *root_password*<**CR**> at the Password: prompt. If already at a Superuser level, then proceed to the next step.	If root privileges are not allowed, contact the System Administrator for assistance with this procedure.

Table 4–75. Jaz Drive Disk Format and Mounting for Backup Purposes – Continued

STEP	ACTION/PROCEDURE	RESPONSE/COMMENTS
2	At the # prompt, enter: **mount<CR>**	Displays all mounted devices. Near the bottom of the listing, note if a line show that "/jaz on /dev/dsk/c1t3dØs2 ..." (or any *mount_point_directory* is mounted on /dev/dsk/c1t3dØs2). If not, proceed to step 4.
3	At the # prompt, enter: **umount /jaz<CR>** or: **umount** *mount_point_directory***<CR>** if some other mount point was observed in step 2.	Unmounts the Jaz disk cartridge (/dev/dsk/c1t3dØs2) from the mount point (/*jaz*). The system will not allow an unmount when "at" the mount point (/*jaz*) or any of its subdirectories. If necessary, "cd" to a different directory location.
4	If a disk cartridge is presently in the workstation Jaz drive, then press the button on the Jaz drive and remove the disk cartridge from the drive.	Set this disk cartridge aside pending completion of this procedure.
5	Insert a blank Jaz 2GB disk cartridge in the drive.	Each disk cartridge must be formatted individually.
6	At the # prompt, enter: **newfs –i 5885 –f 4Ø96 –v /dev/rdsk/c1t3dØs2<CR>newfs –v /dev/rdsk/c1t3dØs2<CR>** When prompted, enter: **y<CR>** to continue.	This creates a new file system on the Jaz disk cartridge (approximately 45 seconds). This is only necessary one time for each Jaz disk cartridge. This is basically a high–level format.

NOTE

Steps 7 through 12 are normally not necessary. If step 6 completed successfully, proceed to step 13.

7	At the # prompt, enter: **format –e<CR>**	Enters the Solaris format utility. Only perform steps 5 through 10 if step 4 did not complete successfully.
8	At the `AVAILABLE DISK SELECTIONS:` window, enter the number shown for the Jaz drive disk (shown as "c1t3dØ") and press **<CR>**. If the system prompts for "Type", enter the number from the list for a `Jaz 2GB` and press **<CR>**.	Selects the Jaz disk to format. The "Type" prompt may or may not occur depending on if the Sun can or can not recognize any part of the previous low–level format.

Table 4–75. Jaz Drive Disk Format and Mounting for Backup Purposes – Continued

STEP	ACTION/PROCEDURE	RESPONSE/COMMENTS
9	At the `FORMAT MENU, format>` prompt, enter: **format<CR>** and when prompted, enter: **y<CR>** to continue.	Formats the disk. This process will take approximately 1.5 hours. At approximately the one hour point, it will indicate "verifying media ..., pass 0 – pattern xxxxxxxx". Wait for "pass 1 – pattern yyyyyyyy" to appear before proceeding.
10	When the media verification indicates "pass 1 – pattern yyyyyyyy", enter: **<Ctrl–C>** and then a **<CR>**	Aborts the remaining media verification. "pass 0" has already completed successfully.
11	At the `FORMAT MENU, format>` prompt, enter: **quit<CR>**	Exits the format program.
12	At the # prompt, enter: **newfs –i 5885 –f 4Ø96 –v /dev/rdsk/c1t3dØs2<CR>newfs –v /dev/rdsk/c1t3dØs2<CR>** When prompted, enter: **y<CR>** to continue.	This creates a new file system for the Jaz disk (approximately 45 seconds). This is only necessary one time for each Jaz disk cartridge. This is basically a high–level format.
13	If at an MSCF workstation, at the # prompt, enter: **jazmount<CR>** and then proceed to step 15. If at an RPG workstation, at the # prompt, enter: **ls –l /jaz<CR>** and continue with the next step.	jazmount is a script which will mount the Jaz disk cartridge to the */jaz* mount point, update the group ID, and update the permissions for the mount point (approximately 20 seconds) at an MSCF workstation. At the same time, it actually writes the new group ID and permissions to the disk cartridge. For a backup disk, this will allow any user to backup information to the disk if necessary. The script also displays a file listing of what presently exists on the disk cartridge. At this point, the only listing should be for a "lost+found" directory. For a DoD or FAA RPG workstation, the Jaz disk is mounted as soon as the /jaz directory is accessed via the "ls –l" command. However, the next step is necessary to get the group ID and permissions correct.
14	At the # prompt, enter: **chgrp rpg /jaz<CR>** **chmod 775 /jaz<CR>**	The "rpg" group is assigned so that all users of that group can access the */jaz* directory (actual disk cartridge) and the "775" permissions adds write access for the rpg group.

Table 4–75. Jaz Drive Disk Format and Mounting for Backup Purposes – Continued

STEP	ACTION/PROCEDURE	RESPONSE/COMMENTS
15	At the # prompt, enter: **umount /jaz<CR>**	Unmounts the Jaz disk cartridge (/dev/dsk/c1t3dØs2) from the mount point (/*jaz*). The system will not allow an unmount when "at" the mount point (/*jaz*) or any of its subdirectories. If necessary, "cd" to a different directory location.
16	At the # prompt, enter: **mount<CR>**	There should be no line showing a mount for "/jaz on /dev/dsk/c1t3dØs2 ...". This proves the Jaz disk did correctly unmount. If it is still mounted, repeat step 15.
17	Press the button on the Jaz drive to eject the disk cartridge and store it in its original holder.	Label the disk and the holder for its intended purpose (e.g., "MSCF Backups"). If needing to format more backup disk cartridges, repeat steps 5 through 17 as necessary.
18	At the # prompt, enter: **exit<CR>**	Exits Superuser mode. This procedure is complete. Steps 19 through 25 are for reference only and just provide additional information on how to make different mount points for the backup disk cartridge.

NOTES

Steps 19 through 25 are provided only as an example on how to make a different mount point other than /*jaz* (in this case /*backup*) and mount/unmount the Jaz disk at that mount point. If it is not desired to experiment with the newly "formatted" backup Jaz disk cartridge, this procedure is complete.

When a jaz disk cartridge disk is mounted, the user can use the mount point just like any normal disk directory for file copies, moves, editing, etc. However, remember that the data for the mount point directory (in the following example: /*backup*) actually resides on the Jaz disk cartridge.

Table 4–75. Jaz Drive Disk Format and Mounting for Backup Purposes – Continued

STEP	ACTION/PROCEDURE	RESPONSE/COMMENTS
	NOTES – Continued At an RPG, an automounting program runs that automatically mounts the Jaz disk to a /*jaz* mount point directory. This automount program will mount the disk when the RPG applications software is running for Archive III purposes (NWS sites only). For all sites, if the disk was not already mounted, any attempt to access the /*jaz* directory at an RPG (e.g., "cd /jaz" or "ls –l /jaz") would also automount the Jaz disk to the /*jaz* mount point directory. To see if the disk may already be mounted, enter the "mount" command without any arguments to see a listing of mounted devices.	
19	At a normal user prompt, enter: **su<CR>** and then *root_password***<CR>** at the Password: prompt. If already at a Superuser level, then proceed to the next step.	If root privileges are not allowed, contact the System Administrator for assistance with this procedure.
20	At the # prompt, enter: **mkdir /backup<CR>**	This only needs to be done once. If a "File exists" error is displayed, it means that the /*backup* directory already exists.
21	At the # prompt, enter: **mount /dev/dsk/c1t3dØs2 /backup<CR>**	Mounts the Jaz disk cartridge (/dev/dsk/c1t3dØs2) to the mount point (/*backup*).
22	At the # prompt, enter: **chgrp rpg /backup<CR>** **chmod 775 /backup<CR>**	The "rpg" group is assigned so that all users of that group can access the /*backup* directory and the "775" permissions adds write access for the rpg group. Use the /*backup* directory (disk cartridge) as desired.
23	At the # prompt, enter: **umount /backup<CR>**	Unmounts the Jaz disk cartridge (/dev/dsk/c1t3dØs2) from the mount point (/*backup*). The system will not allow an unmount when "at" the mount point (/*backup*). If necessary, "cd" to a different directory location.
24	Press the button on the Jaz drive to eject the disk cartridge.	Store the disk cartridge in its holder until needed.
25	At the # prompt, enter: **exit<CR>**	Exits Superuser mode.

WARNING

For DoD and FAA sites, never leave a Jaz disk cartridge actually installed in the RPG's Jaz drive (UD70/170A8). If left in the drive and the disk cartridge should become totally corrupted, it can delay a normal boot process 5 to 10 minutes pending a time–out for device block read errors.

4.6.6.3 Four/Eight Port Serial Card Driver Load. Table 4–76 is designed for removing the serial card driver that is used by the four and eight port serial cards, rebooting the system to clear the serial ports, reinstalling the driver, and finally rebooting the system again to reestablish the serial port settings. Normally, the driver and all serial port settings are established at system load time. This procedure is only used if the a serial card is not functioning properly (possible driver corruption). This procedure is only performed at an RPG processor.

SU

Table 4–76. Four/Eight Port Serial Card Driver Load

STEP	ACTION/PROCEDURE	RESPONSE/COMMENTS
	NOTE If this is being performed at the RPG workstation in the RPGPCA cabinet and there is a BDDS installed, Raritan user channel 1 (RPG) must be selected. Activate mouse and use the on–screen menus to login as **raritan<CR>** user (no password) or, if a screen saver is not active yet, hit the **<Scroll Lock>** key twice quickly to activate the on–screen menus. Then select the RPG user channel.	
1	Exit out of CDE by clicking **EXIT** on the CDE Control Panel and **OK** at the acknowledgement window.	Exits CDE. If not in CDE, proceed to the next step.
2	At the CDE Login screen, click and hold **Options** then select **Command Line Login**.	Will enable login as root outside of the CDE.
3	Enter a **<CR>**	Necessary to get to a Command Line Login prompt.
4	At the "*node_name* console login:" prompt, enter: **root<CR>** and then *root_password***<CR>** at the Password: prompt.	The remainder of this procedure must be performed as a Superuser. If root privileges are not allowed, contact the System Administrator for assistance with this procedure.
5	At the # prompt, enter: **pkgrm MAGMApci<CR>**	Removes the serial port driver package ("MAGMApci").

Table 4–76. Four/Eight Port Serial Card Driver Load – Continued

STEP	ACTION/PROCEDURE	RESPONSE/COMMENTS
6	The user will be asked to confirm the package removal twice, enter **y<CR>** each time.	Confirms the MAGMApci package removal.
7	At the # prompt, enter: **sync<CR>** **init Ø<CR>**	Syncs the file systems and shuts the system down to an ok prompt.
8	At the ok prompt, enter: **boot –r<CR>**	Performs a reconfiguration reboot of the system. All previous system–level configuration of the serial ports will be removed at this time.
9	After the system boots to a CDE Login screen, click and hold **Options** then select **Command Line Login**.	Will enable login as root outside of the CDE.
10	Enter a **<CR>**	Necessary to get to a Command Line Login prompt.
11	At the "*node_name* console login:" prompt, enter: **root<CR>** and then *root_password***<CR>** at the Password: prompt.	The remainder of this procedure must be performed as a Superuser. If root privileges are not allowed, contact the System Administrator for assistance with this procedure.
12	At the # prompt, enter: **cd /var/spool/pkg<CR>**	Change directory to the */var/spool/pkg* directory where software packages are normally stored.
13	At the # prompt, enter: **tar xvf MAGMApci.tar<CR>**	Extracts the package files from the tar file.
14	At the # prompt, enter: **pkgadd MAGMApci<CR>**	Begins the reinstallation of the software package.
15	When prompted to continue, enter: **y<CR>**	Adds the software package. This should take less than one minute and the system will then return to an # prompt.

Table 4–76. Four/Eight Port Serial Card Driver Load – Continued

STEP	ACTION/PROCEDURE	RESPONSE/COMMENTS
16	At the # prompt, enter: **sync<CR>** **init Ø<CR>**	Syncs the file systems and shuts the system down to an ok prompt.
17	At the ok prompt, enter: **boot –r<CR>**	Performs a reconfiguration reboot of the system. The new driver package for the serial adapter card is “attached” at boot time and serial ports are added back into the system. After the system comes up, the “admintool” (Browse serial ports) can be used to ensure serial ports were correctly added to the system as ports 0 through 3 and 4 through 11. The system software will automatically configure the serial ports based upon the requirements for each port. Do not change the settings of the ports.

4.6.6.4 Date/Time Set Process. Table 4–77 is used for checking and setting the system date and time.

SU

Table 4–77. Date/Time Set Process

STEP	ACTION/PROCEDURE	RESPONSE/COMMENTS
	NOTE If this is being performed at the RPG workstation or BDDS workstation in the RPGPCA cabinet, Raritan user channel 1 (RPG) or user channel 2 (BDDS) must be selected as appropriate. Activate mouse and use the on–screen menus to login as **raritan<CR>** user (no password) or, if a screen saver is not active yet, hit the **<Scroll Lock>** key twice quickly to activate the on–screen menus. Then select the RPG or BDDS user channel as appropriate.	
1	At any system prompt, enter: **date<CR>**	Current date and time (GMT) are displayed. If the time appears to be off by more than one minute, continue with this procedure to set the date/time (must be performed as a Superuser).

Table 4–77. Date/Time Set Process – Continued

STEP	ACTION/PROCEDURE	RESPONSE/COMMENTS
2	At a normal user prompt, enter: **su<CR>** and then *root_password*<**CR**> at the Password: prompt. If already at a Superuser level, then proceed to the next step.	If root privileges are not allowed, contact the System Administrator for assistance with this procedure.
3	Obtain an accurate time hack (e.g., WWV, 303–499–7111). GMT time (UTC) is entered for the time entry. At the # prompt, enter: **date mmddHHMM[cc][yy][.ss]<CR>**	Everything after the minutes entry (”MM”) is optional. mm = Month dd = Day HH = Hour MM = Minute Optional entries (normally not entered): cc = Century minus 1 (optional) yy = Year (optional) ss = Seconds (optional)
4	At the # prompt, enter: **date<CR>**	Current date and time (GMT) are displayed. Verify that new date/time are displayed.
5	At the # prompt, enter: **exit<CR>**	Return to a normal user prompt.

4.6.7 PROCESSOR SYSTEM REINITIALIZATION PROCEDURES.

There are normally two cases where the user may want to reinitialize one of their processors. A reinitialization may be required to allow the system to recognize a recent software change of some type or possibly just to allow for an orderly initialization of system processes. This would be handled by a normal system initialization (Table 4–78). In other cases, the system may be acting “strange” or may definitely show signs of corrupted software. In this case, follow the procedure in Table 4–78 if possible to perform a normal reinitialization. However, if that is not possible, perform the steps in Table 4–79 for the abnormal system reinitialization.

NOTE

When these procedures discuss use of the CDE, the assumption is that the user is sitting at at the boot console with the normal direct–connected graphics monitor.

Index, Processor System Initialization Procedures

Procedure	Reference
Normal Processor System Reinitialization Procedure	Table 4–78
Abnormal Processor System Reinitialization Procedure	Table 4–79

4.6.7.1 Normal Processor System Reinitialization Procedure. This procedure will provide for a logical shutdown and reinitialization of the processor system.

Table 4–78. Normal Processor System Reinitialization Procedure

STEP	ACTION/PROCEDURE	RESPONSE/COMMENTS
	NOTE If this is being performed at the RPG workstation or BDDS workstation in the RPGPCA cabinet, Raritan user channel 1 (RPG) or user channel 2 (BDDS) must be selected as appropriate. Activate mouse and use the on–screen menus to login as **raritan<CR>** user (no password) or, if a screen saver is not active yet, hit the **<Scroll Lock>** key twice quickly to activate the on–screen menus. Then select the RPG or BDDS user channel as appropriate.	
1	If within the CDE and any applications software is running, shut down these programs following procedures found in paragraph 4.6.2 (not required for the BDDS). If certain applications can not be stopped, proceed to the next step. If the CDE is not running but the system is at the CDE Login screen or a Command Line Login, proceed to step 3.	If any CDE graphics–type applications are running, it is normally best to shut them down before reinitializing the system.
2	Exit out of CDE by clicking **EXIT** on the CDE Control Panel and **OK** at the acknowledgement window.	Leave the CDE.
3	Push the Standby button on the front of the RPG Processor.	No immediate response for approximately 50 seconds then another 20 seconds to complete the shutdown. Halts the system and system goes to an “`ok`” prompt.

Table 4–78. Normal Processor System Reinitialization Procedure – Continued

STEP	ACTION/PROCEDURE	RESPONSE/COMMENTS
4	At the `ok` prompt, enter: **boot –r<CR>**	"boot –r" performs a system reboot with the reconfiguration check option turned on. At the boot console, the system will return to a CDE Login screen. At that point, the user can login to CDE, check applications functionality, and restart applications software if necessary.
5	If this was performed on a RPG or MSCF processor, log back into CDE after the system boots and restart applications if necessary using procedures specified in paragraph 4.6.2. However, if the RPG software was running when this procedure was performed, it should come back up in a running state.	No further action is required on the BDDS processor since it will always boot into full operation.

4.6.7.2 Abnormal Processor System Reinitialization Procedure. This procedure should only be performed if the normal reinitialization procedures (Table 4–78) can not be performed and it is deemed necessary to perform a reinitialization.

Table 4–79. Abnormal Processor System Reinitialization Procedure

STEP	ACTION/PROCEDURE	RESPONSE/COMMENTS
	NOTE If this is being performed at the RPG workstation or BDDS workstation in the RPGPCA cabinet, Raritan user channel 1 (RPG) or user channel 2 (BDDS) must be selected as appropriate. Activate mouse and use the on–screen menus to login as **raritan<CR>** user (no password) or, if a screen saver is not active yet, hit the **<Scroll Lock>** key twice quickly to activate the on–screen menus. Then select the RPG or BDDS user channel as appropriate.	

Table 4–79. Abnormal Processor System Reinitialization Procedure – Continued

STEP	ACTION/PROCEDURE	RESPONSE/COMMENTS
1	If within the CDE but the system will not allow a normal exit out of CDE, press the power button on the upper right of keyboard (circle with vertical line). If a `Power Off Selection` menu window appears, click **Shutdown** to halt the processor. If a `Power Off Selection` doesn't appear, press the power button on the front of the processor and click **Shutdown** to halt the processor if a `Power Off Selection` menu window appears.	No immediate response for approximately 50 seconds then another 20 seconds to complete the shutdown. Halts the system and system goes to an "ok" prompt (after approximately 30 seconds). If the power off functionality is not working, proceed to step 3.
2	At the `ok` prompt, enter: **boot –r<CR>**	"boot –r" performs a system reboot with the reconfiguration check option turned on. At the boot console, the system will return to a CDE Login screen. At that point, the user can login to CDE, check applications functionality, and restart applications software if necessary. Proceed to step 7.
3	If the system will not allow a normal exit out of CDE and the Power Off functionality will not work, perform steps 4 and 5 if there is any response from any terminal or console window (i.e., allows commands to be entered and they are processed). If not, proceed to step 6. Also proceed to step 6 if: a. At a CDE Login screen and it is not responding normally (i.e., can not log into CDE or get to a command line prompt) and the Standby button (front of processor) has no affect. b. At a Command Line Login (boot console), but it will not allow commands to be entered.	Even if the user can not exit the CDE, the user can still shut the system down in somewhat of an orderly manner as long as commands can be entered at any terminal or console window.
4	At a normal user prompt, enter: **su<CR>** and then *root_password***<CR>** at the Password: prompt. If already at a Superuser level, then proceed to the next step.	If root privileges are not allowed, contact the System Administrator for assistance with this procedure.

Table 4–79. Abnormal Processor System Reinitialization Procedure – Continued

STEP	ACTION/PROCEDURE	RESPONSE/COMMENTS
5	At the # prompt, enter: **sync<CR>** **init 6<CR>**	"Sync" synchronizes the file systems. "init 6" performs a system reboot after first shutting down active processes. This procedure is complete and the system will reinitialize. At the boot console, the system will return to a CDE Login screen. At that point, the user can login to CDE, check applications functionality, and restart applications software if necessary. Proceed to step 7.
	NOTE Step 6 should only be performed as a last resort. This assumes the user is at the CDE and can not exit the CDE or enter commands; the user is at the CDE Login screen and can not get to the CDE or a command line prompt; the user is at the command line and can not enter commands; and the processor power off button will not power off the processor. If any of these functions do work, then return to Table 4–78 and perform the normal reinitialization procedure.	
6	Use the power switch at the rear of the unit and power the processor off for five seconds and back on to reboot it.	If a forced power off/on was necessary, the system should reboot as a result of the power on.
7	If this was performed on a RPG or MSCF processor, log back into CDE after the system boots and restart applications if necessary using procedures specified in paragraph 4.6.2. RPG applications may or may not be running depending on the state of corruption prior to this abnormal reinitialization.	No further action is required on the BDDS processor since it will always boot into full operation.

4.6.8 SYSTEM CLEANUP ACTIONS.

The System Administrator may need to take action from time to time to clean out unnecessary files. Core dumps are made during some software crashes. Unless needed by Software Engineering for analysis, these files should be deleted periodically because they are normally quite large. For a system that has a printer, printer problems may leave unwanted print requests in the queue. These should also be cleaned out periodically. All of these procedures must be performed in Superuser mode.

Index, System Cleanup Actions

Procedure	Reference
Find and Clean Out Core Dumps	Table 4–80
Clean Out Print Queues	Table 4–81

4.6.8.1 Find and Clean Out Core Dumps. First, the user will verify how many core files exist. The user will delete the files and then verify that they are gone.

SU

Table 4–80. Find and Clean Out Core Dumps

STEP	ACTION/PROCEDURE	RESPONSE/COMMENTS
	NOTE If this is being performed at the RPG workstation or BDDS workstation in the RPGPCA cabinet, Raritan user channel 1 (RPG) or user channel 2 (BDDS) must be selected as appropriate. Activate mouse and use the on–screen menus to login as **raritan<CR>** user (no password) or, if a screen saver is not active yet, hit the **<Scroll Lock>** key twice quickly to activate the on–screen menus. Then select the RPG or BDDS user channel as appropriate.	
1	At a normal user prompt, enter: **su<CR>** and then *root_password***<CR>** at the Password: prompt. If already at a Superuser level, then proceed to the next step.	If root privileges are not allowed, contact the System Administrator for assistance with this procedure.
2	At the # prompt, enter: **find / –name core<CR>**	Finds all files named “core” and a listing with absolute path names is displayed.

Table 4–80. Find and Clean Out Core Dumps – Continued

STEP	ACTION/PROCEDURE	RESPONSE/COMMENTS
3	At the # prompt, enter: **rm –r** *1st_ absolute_path 2nd_ absolute_path* **<CR>**	All files can be deleted on the same command line if desired. If under CDE or when using most any type of terminal emulator running in a Windowed mode, the user can normally cut and paste these *absolute_path* names onto the command lines (space between each name). Otherwise, type the absolute path manually on the command line.
4	At the # prompt, enter: **find / –name core<CR>**	The system will search again for "core" files and assuming no files are found, the system will return to a # prompt. Repeat step 3 if necessary.

4.6.8.2 Clean Out Printer Queues. If printing problems are encountered or print type error messages are occurring on the console window, perform the following procedure to clean out the printer queues at the MSCF workstation.

SU

Table 4–81. Clean Out Printer Queues

STEP	ACTION/PROCEDURE	RESPONSE/COMMENTS
	NOTE This would only be necessary on the MSCF workstation since the printer is designed to print only from the MSCF workstation.	
1	At a normal user prompt, enter: **su<CR>** and then *root_password***<CR>** at the Password: prompt. If already at a Superuser level, then proceed to the next step.	If root privileges are not allowed, contact the System Administrator for assistance with this procedure.
2	At the # prompt, enter: **lpshut<CR>**	Shuts down the printer service.
3	At the # prompt, enter: **cd /var/spool/lp<CR>**	Changes to the */var/spool/lp* directory.
4	Enter **pwd<CR>**	Verify the present directory is */var/spool/lp*.
5	At the # prompt, enter: **rm –r tmp requests fifos<CR>**	Removes the three specified directories (with files).

Table 4–81. Clean Out Printer Queues – Continued

STEP	ACTION/PROCEDURE	RESPONSE/COMMENTS
6	At the # prompt, enter: **rm temp<CR>**	Removes the "temp" file.
7	At the # prompt, enter: **cd ../print<CR>**	Changes to the */var/spool/print* directory.
8	At the # prompt, enter: **pwd<CR>**	Feedback states */var/spool/print* directory.
9	At the # prompt, enter: **rm *<CR>**	Removes all files in this directory. Do not worry about "No such file or directory" messages –– it indicates that no files exist.
10	At the # prompt, enter: **/usr/lib/lpsched<CR>**	Restarts the printer service (must use absolute path).
11	At the # prompt, enter: **exit<CR>**	Returns user to a normal user prompt.
12	Enter **cd<CR>**	Returns working directory to home location.

4.6.9 USE OF ADMINTOOL.

Admintool is the graphical System Administrator's tool. It is used primarily for controlling group accounts, user accounts, printers, and serial ports. However, all printer and serial port requirements are met by the system software loads and these areas should not be changed.

Index, Admintool Actions

Procedure	**Reference**
Addition of Groups	Table 4–82
Addition of Users	Table 4–83

4.6.9.1 Addition of Groups. Since users are normally assigned to groups, standard groups should be added first The only mandatory group for all three processors is "rpg". All user accounts belong to this group. All of these procedures must be performed in Superuser mode.

Table 4–82. Addition of Groups

STEP	ACTION/PROCEDURE	RESPONSE/COMMENTS
	NOTE If this is being performed at the RPG workstation or BDDS workstation in the RPGPCA cabinet, Raritan user channel 1 (RPG) or user channel 2 (BDDS) must be selected as appropriate. Activate mouse and use the on–screen menus to login as **raritan<CR>** user (no password) or, if a screen saver is not active yet, hit the **<Scroll Lock>** key twice quickly to activate the on–screen menus. Then select the RPG or BDDS user channel as appropriate.	
1	At a normal user prompt, enter: **su<CR>** and then *root_password***<CR>** at the Password: prompt. If already at a Superuser level, then proceed to the next step.	If root privileges are not allowed, contact the System Administrator for assistance with this procedure.
2	At the # prompt, enter: **admintool &<CR>**	Brings up admintool in background mode (doesn't tie up usage of the terminal window).
	NOTE Steps 3 through 7 each address a specific window and are divided into two parts. The first part of the step provides the Window Name and default information in the RESPONSE/COMMENTS column. The second part of the step provides the specific action/procedure required.	
3	`Admintool: Users`	By default, access to the User accounts is available first.
	Click **Browse ▶ Groups**	Selects access to the group accounts.
4	`Admintool: Groups`	Provides a listing of Groups.
	Click **Edit ▶ Add**	Opens a window to add a group.
5	`Admintool: Add Group`	Provides entry blocks for "Group Name", "Group ID, and "Member List".

Table 4–82. Addition of Groups – Continued

STEP	ACTION/PROCEDURE	RESPONSE/COMMENTS
	Click in the `Group Name:` block and type in the desired group name.	User lower case characters only. The first user–added group is “rpg” and is made at system installation time on all processors. Other groups are optional. The “Group ID” is supplied by the system and “101” is used by the “rpg” group. Use of “Member List” is optional.
6	`Admintool: Add Group`	Desired entries completed.
	Click **OK**	Saves information and returns the user to the “Groups” window.
7	`Admintool: Groups`	Provides a listing of Groups.
	Click **File ▶ Exit**	Closes Admintool.

4.6.9.2 Addition of Users. There are mandatory user accounts for all three processors. One user account that is necessary for each processor is the one for loading the applications software for that particular processor. For example, Open Build 1 may be loaded in a user account with a user name of “v1.0” and its absolute home path would be */export/home/v1.0*. Other mandatory user accounts are also established during full system load. However, all of these accounts are established by the full system software load scripts from the CD and do not have to be created. This procedure is primarily designed to be used for establishing individual user accounts. Individual user accounts must have User IDs between 1001 and 20,000 (inclusive). If a new replacement processor or fixed disk is installed, it is necessary to reestablish all user accounts IAW this procedure after the system software is loaded (Table 4–52 through Table 4–54).

Table 4–83. Addition of Users

STEP	ACTION/PROCEDURE	RESPONSE/COMMENTS
	NOTE If this is being performed at the RPG workstation or BDDS workstation in the RPGPCA cabinet, Raritan user channel 1 (RPG) or user channel 2 (BDDS) must be selected as appropriate. Activate mouse and use the on–screen menus to login as **raritan<CR>** user (no password) or, if a screen saver is not active yet, hit the **<Scroll Lock>** key twice quickly to activate the on–screen menus. Then select the RPG or BDDS user channel as appropriate.	
1	At a normal user prompt, enter: **su<CR>** and then *root_password***<CR>** at the Password: prompt. If already at a Superuser level, then proceed to the next step.	If root privileges are not allowed, contact the System Administrator for assistance with this procedure.
2	At the # prompt, enter: **admintool &<CR>**	Brings up admintool in background mode (doesn't tie up usage of the terminal window).
	NOTE Steps 3 through 13 each address a specific window and are divided into two parts. The first part of the step provides the Window Name and default information in the RESPONSE/COMMENTS column. The second part of the step provides the specific action/procedure required.	
3	`Admintool: Users`	By default, access to the User accounts is available first.
	Click **Edit ▶ Add**	Opens a window to add a user.
4	`Admintool: Add User`	Provides numerous entry blocks for user identification.

Table 4–83. Addition of Users – Continued

STEP	ACTION/PROCEDURE	RESPONSE/COMMENTS
	Click in the `User Name:` block and type in the desired user name.	As previously indicated, all system–level applications type accounts are established by the full system software load scripts. However, for security reasons, these accounts are not actively used for manipulating the software. Individual user accounts must be created for all site users that will require access to the system applications software.
5	`Admintool: Add User`	"User Name" entry complete.
	Check the `User ID:` block. The system will automatically assign ID numbers beginning with 1001.	Use default ID number or assign a unique ID. Use only ID numbers between 1001 and 20000 (inclusive). Do not use an ID number outside of this range.
6	`Admintool: Add User`	"User ID" entry complete.
	Click in the `Primary Group:` block, highlight the present group number and enter: **1Ø1**	All users should belong to the "rpg" group. This group will have a group number of "101". Secondary Groups are optional.
7	`Admintool: Add User`	"Primary Group" entry complete.
	Click on `Login Shell:` **Bourne** to bring up the shell selection sub–menu. Then click the desired or <u>required</u> shell.	"C" shell is mandatory for all RPG, MSCF, and BDDS applications software user accounts <u>and all individual user accounts requiring access to the applications software</u>.
8	`Admintool: Add User`	"Login Shell" entry complete.
	Click on **Cleared until first login** (default "Password:") and then click **Normal Password**. In both the "Enter" and "Verify" blocks, type in the desired password and then click **OK**.	The System Administrator will control the password for all applications software accounts. For individual user accounts, security requirements dictate that the System Administrator set the password to a unique password, inform the user of the password, and advise each user that they can use the assigned password when they first login but then they must select their own password (eight characters with at least one alpha and one numeric character).
9	`Admintool: Add User`	"Password" entry complete.
	Click in the `Max Change: days` block and enter in **9Ø**	Will force reestablishment of a new password every 90 days.

Table 4–83. Addition of Users – Continued

STEP	ACTION/PROCEDURE	RESPONSE/COMMENTS
10	`Admintool: Add User`	"Password" entry complete.
	Click in the `Warning: days` block and enter **5**	Gives user 5 days warning before their password expires.
11	`Admintool: Add User`	"Max Change: Days" entry complete.
	Click in the `Path:` block and type in the desired users home directory path: **/export/home/***user_name***<CR>**	For individual user accounts use /export/home/*user_name* where *user_name* is the same name used in step 4.
12	`Admintool: Add User`	Entries completed.
	Click **OK**	Saves information and returns the user to the "Users" window. If additional users must be added, repeat steps 3 through 12 at this time.
13	`Admintool: Users`	Provides a listing of Users.
	Click **File ▶ Exit**	Closes Admintool. If this is an RPG or MSCF processor, proceed to step 17.
14	Perform steps 14 through 16 if this is a BDDS processor. Otherwise, proceed to step 17. At a normal terminal window # prompt, enter: **cd /export/home/<CR>**	Changes to the home directory for all user accounts.
15	At the # prompt, enter: **cp –p bdds/.cshrc** *user_name***<CR>**	Where *user_name* is the account name of the new user added to the BDDS system. This must be done individually for each new user account that was added.
16	At the # prompt, enter: **chown** *user_name user_name*/**.cshrc<CR>**	Changes ownership of the .cshrc file in the new user account to that user (*user_name*). This must be done individually for each new user account that was added. For a BDDS processor, this procedure is complete.

Table 4–83. Addition of Users – Continued

STEP	ACTION/PROCEDURE	RESPONSE/COMMENTS
	NOTE If the new user(s) were added at an RPG or MSCF, two configuration items are necessary for the new user(s) to be able to run the applications software. One item is that they must have the correct .cshrc file in their home directory. The other item is that their User ID must exist in the /etc/operate_rpg.conf file. These requirement are met by steps 17 through 20 below. However, when step 20 is performed, the .cshrc file in all user accounts will automatically be updated. If any old users have customized their .cshrc file in their accounts. they should be warned to back up their file to a temporary file name prior to performing step 20. This will allow them restore their original .cshrc file later should they chose to do so.	
17	Steps 17 through 20 are required at an RPG or MSCF processor. At a normal terminal window # prompt, enter: **cd /export/home<CR>**	Changes to the home directory location of all users, including the applications software user account.
18	At the # prompt, enter: **ls –l<CR>**	Note the present version account name for the RPG or MSCF applications software (e.g., “v1.157” or “v1.5”).
19	At the # prompt, enter: **cd** *version_acct***<CR>**	*version_acct* is the present version account name for the RPG or MSCF applications software (e.g., “v1.157” or “v1.5”) as observed in the previous step.
20	At the # prompt, enter: **./update_users<CR>**	This program will automatically update all user’s .cshrc file as required to run the applications software and also ensure any new user IDs are added to the /etc/operate_rpg.conf file. This procedure is complete. Resume normal operations.
21	At the # prompt, enter: **exit<CR>**	Returns user to a normal user prompt.
22	If desired, exit the CDE by clicking **EXIT** on the CDE Control Panel and **OK** at the acknowledgement window.	Returns user the the CDE Login screen.

Section 4.7. Unique MSCF Human Computer Interface Requirements

NOTES

This chapter and its corresponding sections refer to the RPGPCA as UD70. Unless otherwise specified for FAA redundant systems, this information also applies to RPGPCA UD170.

Command entries and mouse selections are shown in **bold** type. Variable names are shown in a unique font (e.g., *variable_name*). Within a command string entry, the variable placeholders are not bold type; however, all portions of the command that are entered exactly as shown are in bold type. The variable placeholder within the command string must be replaced with a name, address, etc. unique to each system. The user is told how to formulate the entry, or directed where to find this information. Since the keyboard in use may have either an "Enter" key or a "Return" key, the end of the command line is delineated with a **<CR>**. Unless stated otherwise, each command line shown must be "entered" to be processed. Also, directory names/paths shown outside of a command example are *italicized* for clarity purposes.

For mouse selections, the word "click" is a standard single click of the left mouse button. The word "drag" is a standard left mouse click and hold while moving the mouse pointer at the same time. Dragging can be used to move a window, highlight text, or make a menu selection. The symbol ▶ is used to indicate subsequent left clicks through sub–menu selections. When a right, middle, or double–click is required, it is specifically indicated.

Brief network outages may be seen occasionally while working at the MSCF workstation where the RPG HCI actually disappears for a couple of seconds and then comes back up. If this occurs, the only operational impact to the user could be in the area of making edits to adaptation data. If edits are being made and have not been saved when this type of brief network outages occurs, all edits will be lost and will need to be made again. To avoid this possibility, it is a good idea to save edits periodically while they are being made rather than waiting until the end.

4.7.1 INTRODUCTION.

The MSCF HCI contains the windows listed below for the user to perform maintenance functions, monitor RDA and wideband communications performance and status data, and review RPG and RDA alarm and status messages. This section has figures of each window, descriptions of all maintenance commands within each window, and procedures for selected maintenance tasks.

- RPG Control/Status (Main Menu)
- Archive II
- Archive III Control/Status
- Change Passwords
- Console Messages
- Font Properties
- HCI Properties
- Load Shed Categories
- MLOS Status
- Moments
- MSCF Base Data Distribution Server HCI
- MSCF Comms Status
- MSCF Display
- MSCF Power Control
- Password
- Product Distribution Comms Status
- PUP/RPGOP Status
- RDA Alarms
- RDA Control/Status
- RDA Performance Data
- RDA Antenna/Pedestal Performance Data
- RDA Calibration Performance Data
- RDA Calibration Check Performance Data
- RDA Device Status Performance Data

- RDA Disk File Status Performance Data
- RDA Receiver/Signal Processor Performance Data
- RDA Tower Utilities Performance Data
- RDA Transmitter Performance Data
- RDA Wideband Communications Performance Data
- RDA/RPG Interface Control/Status
- Record Base Data
- Reflectivity Calibration
- RMS Messages (FAA Redundant Only)
- RPG Control
- RPG Init Options
- RPG Product Distribution Control
- RPG Products
- RPG Status
- VCP Control

4.7.2 MAIN MENU.

The RPG Control/Status window is commonly referred to as the Main Menu, see Figure 4–40. It is opened by clicking on the **RPG HCI** button in the Master System Control Functions window at the MSCF Workstation. It can also be opened at the RPG Maintenance Position terminal in the RPG cabinet at a Terminal window system prompt by entering **hci&<CR>**. It gives the user a graphical representation of the current system status and provides links to other windows. The RPG ID and the current day, date, and time are displayed near the top of the window. The mouse pointer changes from a standard arrow to a pointing index finger when it is on an active area, such as a button or an icon. From this point, a single left click of the mouse opens the associated window or performs the selected command.

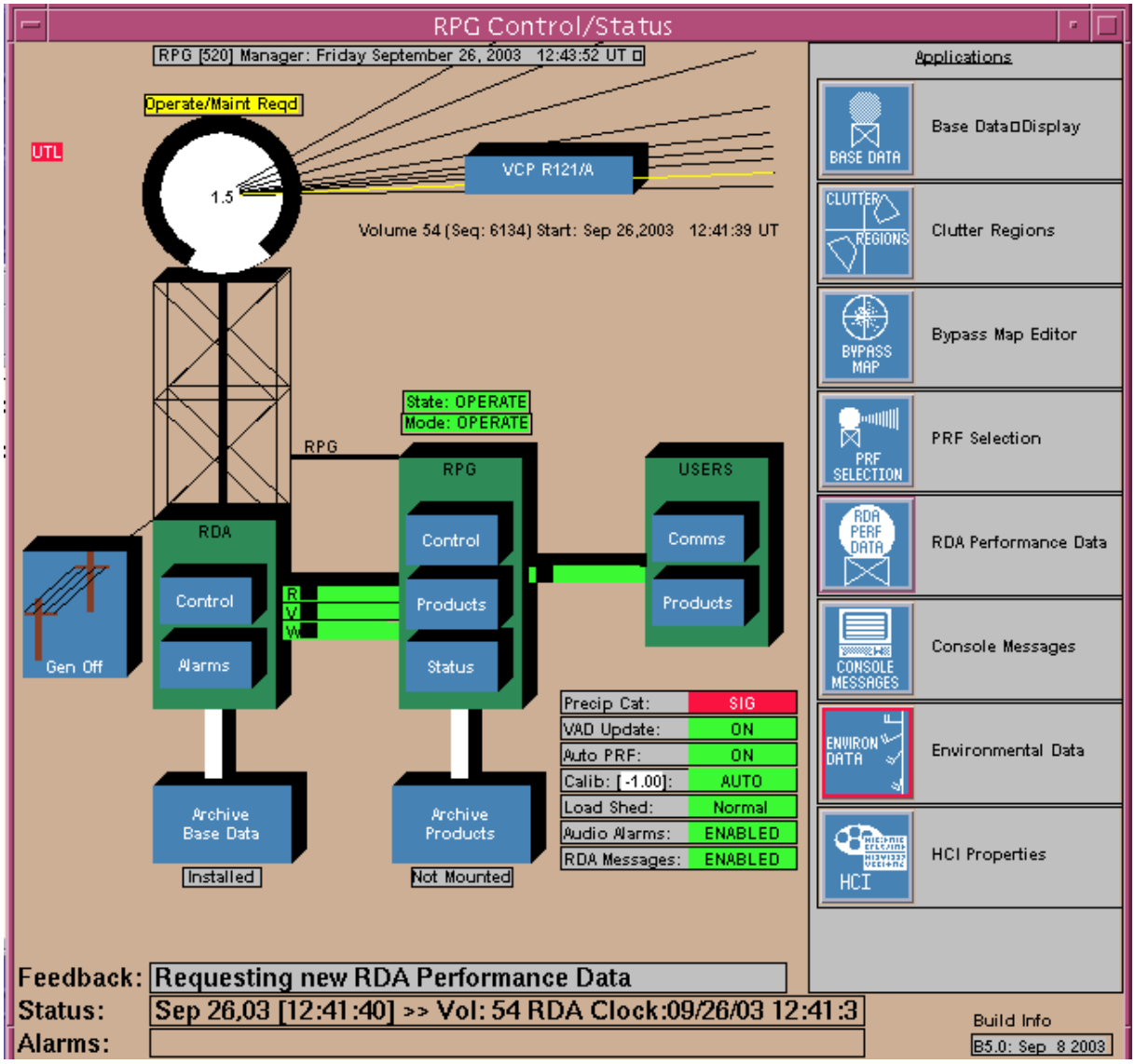

Figure 4–40. RPG Control/Status Window (Main Menu)

4.7.2.1 Applications. The Applications area on the right side of the Main Menu contains several icons that symbolize other windows that are used frequently in the everyday operation and maintenance of the system. Clicking on any of these icons opens up its associated window. The following paragraphs provide more information on each one of these icons.

4.7.2.1.1 Base Data Display. Clicking on the **BASE DATA** icon opens the RPG Base Data Display window that, by default, displays the most recent Reflectivity product data. Within this window, the user can also display either the Velocity or the Spectrum Width base data products.

4.7.2.1.2 Clutter Regions. Clicking on the **CLUTTER REGIONS** icon opens the Clutter Regions Editor window.

4.7.2.1.3 Bypass Map Editor. Clicking on the **BYPASS MAP** icon opens the Clutter Bypass Map Editor window.

4.7.2.1.4 PRF (Pulse Repetition Frequency) Selection. Clicking on the **PRF SELECTION** icon opens the PRF Selection (Modify Current VCP) window.

4.7.2.1.5 RDA Performance Data. Clicking on the **RDA PERF DATA** icon opens the RDA Performance Data window. See Figure 4–41. This window is used much like a menu, and each category of data is represented by an associated button. From here the user can see when the RDA performance data was last updated and select from the following buttons to view the newest RDA performance data:

- RDA **Antenna/Pedestal** Performance Data See Figure 4–42.
- RDA **Calibration** Performance Data See Figure 4–43.
- RDA **Calibration Check** Performance Data See Figure 4–44.
- RDA **Device Status** Performance Data See Figure 4–45.
- RDA **Disk File Status** Performance Data See Figure 4–46.
- RDA **Receiver/Signal Processor** Performance Data See Figure 4–47.
- RDA **Tower Utilities** Performance Data See Figure 4–48.
- RDA **Transmitter** Performance Data See Figure 4–49.
- RDA **Wideband Communications** Performance Data See Figure 4–50.

Clicking on each button listed above produces one of three different results. If no performance data is available, then it is indicated within the RDA Performance Data window, and the associated window does not even open. If old performance data is available, then the associated window is opened and it displays the most current data as indicated within the window in the Last Update field. If new data is available, then the window is opened and then updated automatically at the same time. This process is observed by the user when a quick flash is seen. During this flash, old data is replaced by new data and the date and time changes in the Last Update field. If any of these windows are left opened, they do not update automatically when new performance data is available from the RDA. To display any new data, the user must click on the **Update** button within the window. Shortly after clicking on the **Update** button, the same quick flash as described above is seen by the user, old data is replaced by new, and the Last Update field changes. Several different RDA Performance Data windows can be open at the same time. However, it is important to be aware of the fact that opening any of these windows not only updates that window, but also updates any other windows that are already opened. Additionally, if more that one of these windows are open, clicking on the **Update** button in any of these windows not only updates that specific window, but it also updates all of the other windows that are already opened. Clicking on the **Close** button within any of the RDA Performance Data windows closes that specific window. Clicking on the **Close** button within the main RDA Performance Data selection menu window closes that specific window and closes all of the RDA Performance Data windows that had been opened from it.

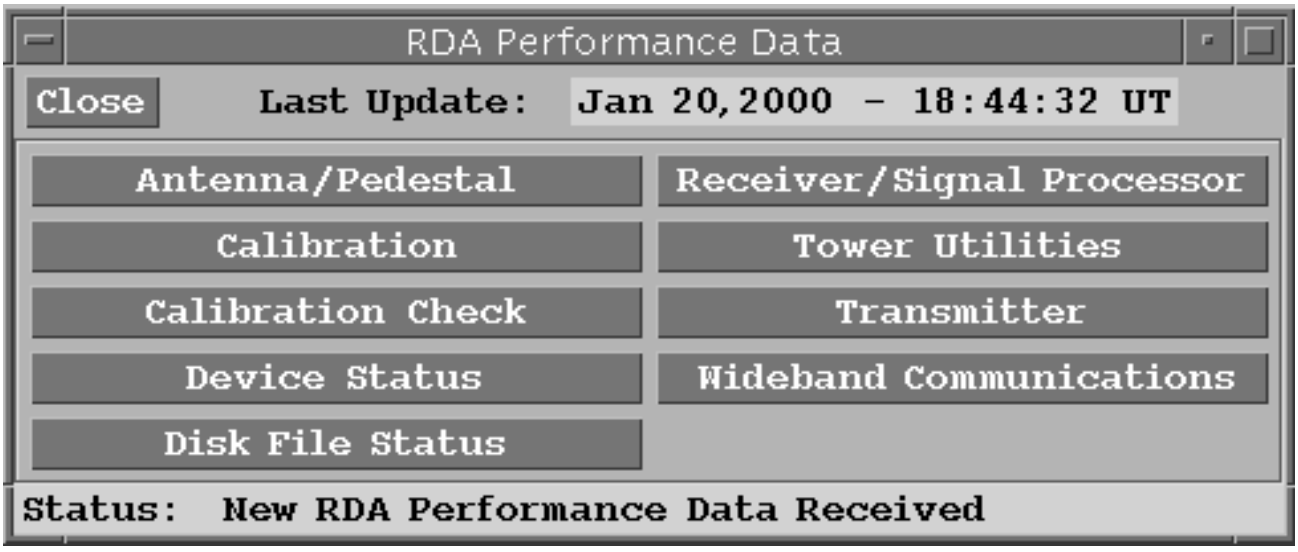

Figure 4–41. RDA Performance Data Window

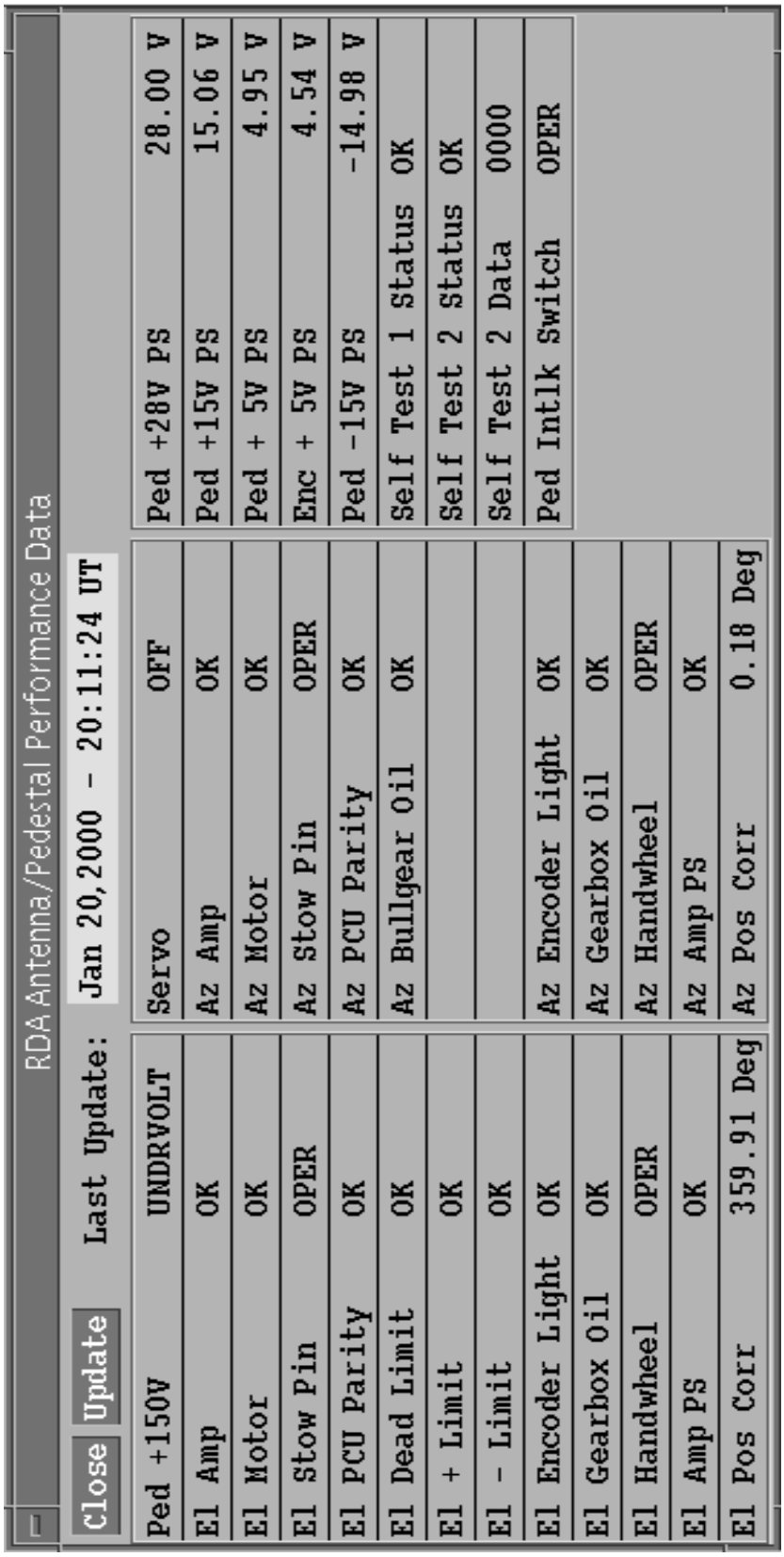

Figure 4–42. RDA Antenna/Pedestal Performance Data Window

RDA Calibration Performance Data

Close Update Last Update: Oct 27,1999 - 15:34:09 UT

Target Amplitude (dBZ)

	LIN			LOG		
	Expected	Measured	Delta	Expected	Measured	Delta
CW	42.80	42.50	-0.30	42.80	43.00	0.20
RFD 1	22.24	21.50	-0.74	22.24	22.00	-0.24
RFD 2	34.21	34.50	0.29	34.21	34.50	0.29
RFD 3	47.19	47.50	0.31	47.19	46.50	-0.69
Avg RFD Delta			-0.05			-0.21
Test Target Delta			-0.25			0.41

Phase RAM (m/s)

	Velocity			Width		
	Expected	Measured	Delta	Expected	Measured	Delta
RAM 1	0.00	0.00	0.00	3.55	3.50	-0.05
RAM 2	-7.00	-7.00	0.00	3.55	3.50	-0.05
RAM 3	10.50	10.50	0.00	3.55	3.50	-0.05
RAM 4	-17.50	-17.50	0.00	3.55	3.50	-0.05

AGC

	Amp (dB)	Amp Error	Phase (deg)
Step 1	1.47	-0.03	0.00
Step 2	2.98	-0.02	0.00
Step 3	5.91	-0.09	-0.01
Step 4	11.99	-0.01	-0.01
Step 5	23.93	-0.07	-0.00
Step 6	47.99	-0.01	-0.02

I/Q Balance

Amplitude	Phase (deg)
0.987	-93.09

SYSCAL (dB)

	LIN	LOG
Short Pulse	9.06	-0.04
Long Pulse	5.37	-1.23

Figure 4–43. RDA Calibration Performance Data Window

RDA Calibration Check Performance Data

Close Update Last Update: Jan 20,2000 - 21:44:08 UT

Target Amplitude (dBZ)

	LIN			LOG		
	Expected	Measured	Delta	Expected	Measured	Delta
KD1	14.66	13.50	-1.16	14.66	14.00	-0.66
KD2	-9.60	-10.50	-0.90	-9.60	-9.50	0.10
KD3	-19.45	-20.50	-1.05	-19.45	-18.50	0.95
Avg KD Delta			-1.04			0.13

Clutter Suppression Channel Power (dB)

	LIN	LOG
Unfiltered	15.19	24.46
Filtered	-41.75	-24.39
Suppression	56.94	48.86

Figure 4–44. RDA Calibration Check Performance Data Window

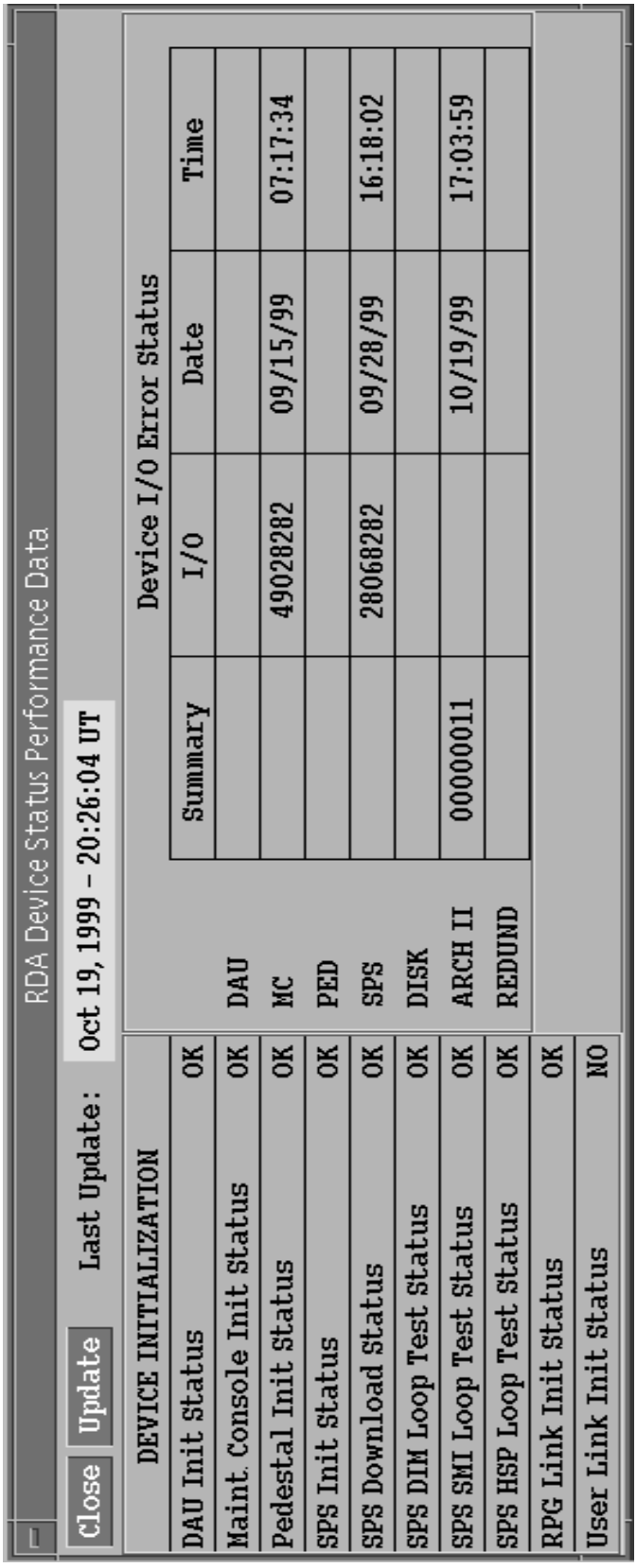

Figure 4–45. RDA Device Status Performance Data Window

RDA Disk File Status Performance Data

Close Update Last Update: Jan 21,2000 - 13:59:23 UT

	Disk File Status	
	Read	Write
State	OK	OK
Bypass Map	OK	OK
RDASC Cal Data	OK	OK
RDASOT Cal Data	OK	
Mod Adapt	OK	
Censor Zone	OK	OK
Remote VCP	OK	OK

Figure 4–46. RDA Disk File Status Performance Data Window

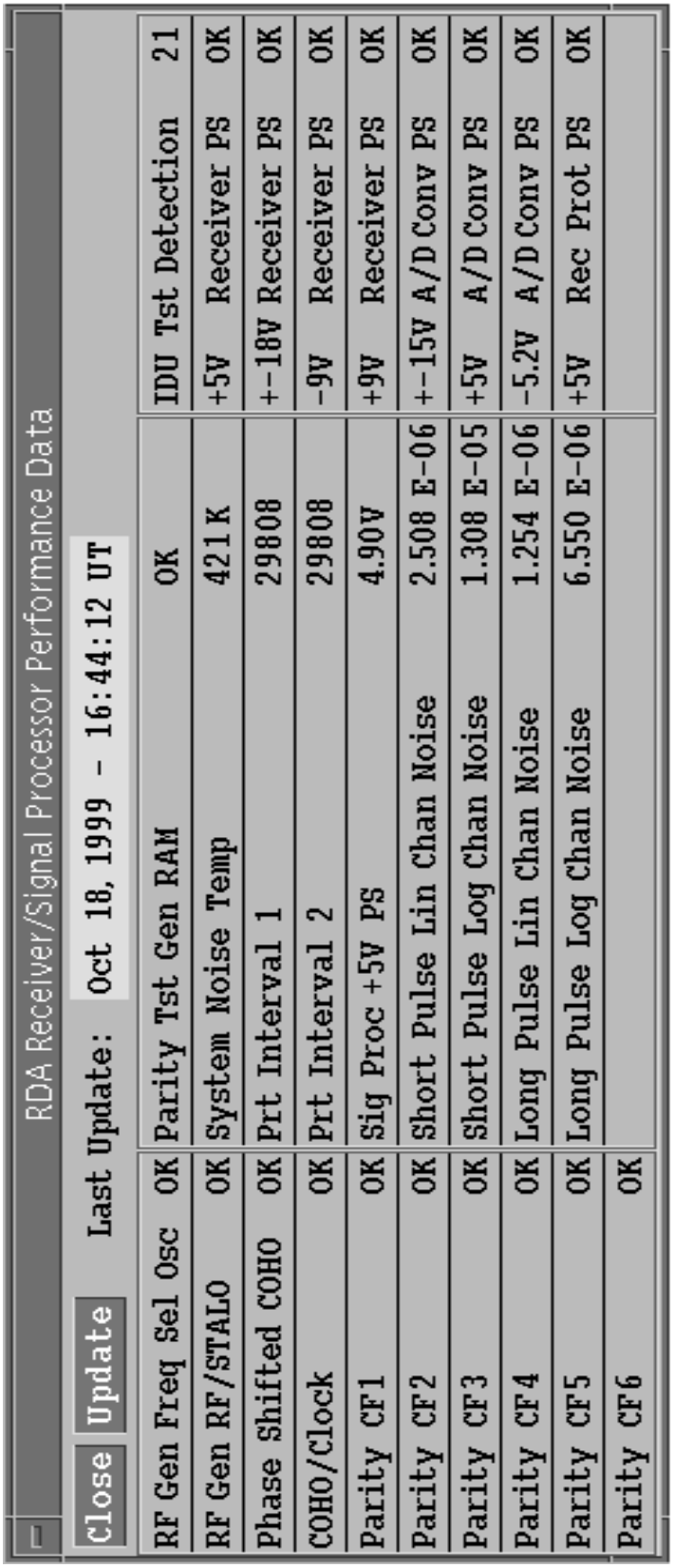

Figure 4–47. RDA Receiver/Signal Processor Performance Data Window

RDA Tower Utilities Performance Data

Close | Update | Last Update: Oct 27, 1999 – 19:26:36 UT

AC #1 Compressor	OK	Pwr Xfer Switch	AUTO	Equipment Shelter	OK	DAU Test 0	9
AC #2 Compressor	OK	Pwr Source	UTILITY	Equip Shelter Fire Sys	OK	DAU Test 1	125
		Gen Battery Voltage	OK	Equip Shelter Temp	22.3 C	DAU Test 2	233
		Gen Engine	OK	Radome Hatch	CLOSED	UART	OK
AC #1 Air Temp	24.3 C	Gen Volt/Freq	NOT AVAIL	Radome Air Temp	1.5 C	MC +28 V PS	28.01 V
AC #2 Air Temp	8.6 C	Util Volt/Freq	AVAILABLE	Outside Temp	27.5 C	MC +15 V PS	15.06 V
		Gen Shelter	OK	Xmtr Air Temp	24.7 C	MC + 5 V PS	5.00 V
		Gen Shelter Fire Sys	OK	Aircraft Lighting	OK	MC –15 V PS	–15.08 V
AC #1 Filter	OK	Gen Shelter Temp	26.0 C	Site Security	ALARM	Chan In Control	NA
AC #2 Filter	OK	Gen Fuel Level	47.5 %	Security Equip	OK	Int Proc Response	NA
		Gen Maint Reqd	NO	Security Sys	OK		
		Trans Pwr Source	OFF				

Figure 4–48. RDA Tower Utilities Performance Data Window

RDA Transmitter Performance Data

Close | Update | Last Update: Oct 18,1999 – 15:36:48 UT

Summary	OK	WG/PFN Xfer Intlk	OK	Flyback Charger	OK
Xmtr Inop	OK	Circulator Temp	OK	Inv Diode Curr	OK
Xmtr Available	YES	Filament PS	ON	Trigger Amp	OK
Maintenance Mode	NO	Filament PS Volt	OK	PRF Limit	OK
Maintenance Required	NO	+ 5V PS	OK	DAU Interface	OK
Antenna Peak Power	512 kW	+ 15V PS	OK		
Xmtr Peak Power	729 kW	– 15V PS	OK	Oil Temperature	OK
Antenna Avg Power	1003.5 W	+ 28V PS	OK	Oil Level	OK
Xmtr Avg Power	1427.3 W	+ 45V PS	OK	Post Chg Reg	OK
Microwave Loss	1.5dB	Vacuum Pump PS	OK	Test Bit 0	OK
Antenna Power Meter Zero	10.7	WG Arc/VSWR	OK	Test Bit 1	OK
Xmtr Power Meter Zero	6.9	WG Press/Hmd	OK	Test Bit 2	OK
Xmtr Air Filter	OK	Spect Fltr Press	OK	Test Bit 3	OK
				Test Bit 4	OK
High Voltage	ON	Cabinet Intlk	OK	Test Bit 5	OK
Xmtr Recycle Count	0	Cabinet Air Temp	OK	Test Bit 6	OK
Klystron Warmup	NORM	Cabinet Airflow	OK	Test Bit 7	OK
WG Switch Position	ANT	Mod Overload	OK		
PFN Switch Position	SHORT	Mod Inv Current	OK		
Klystron Current	OK	Mod Switch Fail	OK		
Klystron Filament Cur	OK	Mod Switch Maint	OK		
Klystron Vacion Cur	OK	Main Power Voltage	OK		
Klystron Air Temp	OK	Xmtr Overvoltage	OK		
Klystron Airflow	OK	Xmtr Overcurrent	OK		
Focus Coil Airflow	OK				
Focus Coil PS	OK	Xmtr Battery Charging	YES		
Focus Coil Cur	OK				

Figure 4–49. RDA Transmitter Performance Data Window

RDA Wideband Communications Performance Data

Close Update Last Update: Jan 21,2000 - 16:28:47 UT

	Wideband Link	
	RPG	USER
DCU Status	0000	0000
General Error Code	1F	00
SVC 15 Error Code	00	00
Outgoing Frames	245	0
Frames with FCS Errors	0	0
Retransmitted I-Frames	0	0
Polls Sent and Received	214	0
Poll Time-Outs	0	0
Min Buffers in Read-Pool	5	0
Max Buffers in Read-Done List	1	0
Loop-Back Test	PASS	NOT CNFG

Figure 4–50. RDA Wideband Communications Performance Data Window

4.7.2.1.6 Console Messages. Clicking on the **CONSOLE MESSAGES** icon opens the Console Messages window. See Figure 4–51. This window is used to display incoming messages and send outgoing messages. The possible sources of an incoming message are as follows:

- RDA
- RPGOP

The possible destinations for an outgoing message are as follows:

- **RDA**
- **RGOP**
- **APUP**
- **NIDS** (NEXRAD Information Dissemination Service)
- **RMS** Only present when the RPG is configured as an FAA Redundant system
- **All**

Incoming messages appear in the Incoming Messages area of the window and are listed in order with the newest at the top. So, when a new incoming message is received from any source, this window opens automatically and the new message appears at the top of the list if the Incoming Messages area contains more than one message. The RPG does not provide any information to the user about the source of any incoming message, unless it was included in the message itself by the sender.

To send a message to any destination, first click on the **Outgoing Messages** area of the window to activate it. Clicking on the **Clear** button at this point will completely clear out the Outgoing Messages area of any text that might be left from the previous outgoing message. Next, simply enter the desired message. After entering a message, the user must select a destination(s) for the outgoing message. This is accomplished in the Destinations area of the window by clicking on the box next to the desired destination(s) which places a check mark in the box. The outgoing message is sent only to the destination selection(s) that have a check mark present in the box. The **All** selections in each Class area are a toggle that alternately selects and deselects all of the destinations within that Class. Next, the user must click on the **Send** button to send the outgoing message to the selected destination(s). If the user fails to select a destination prior to clicking on the **Send** button, a warning_popup window appears reminding the user to select a destination. Clicking on the **Close** button closes the Console Messages window.

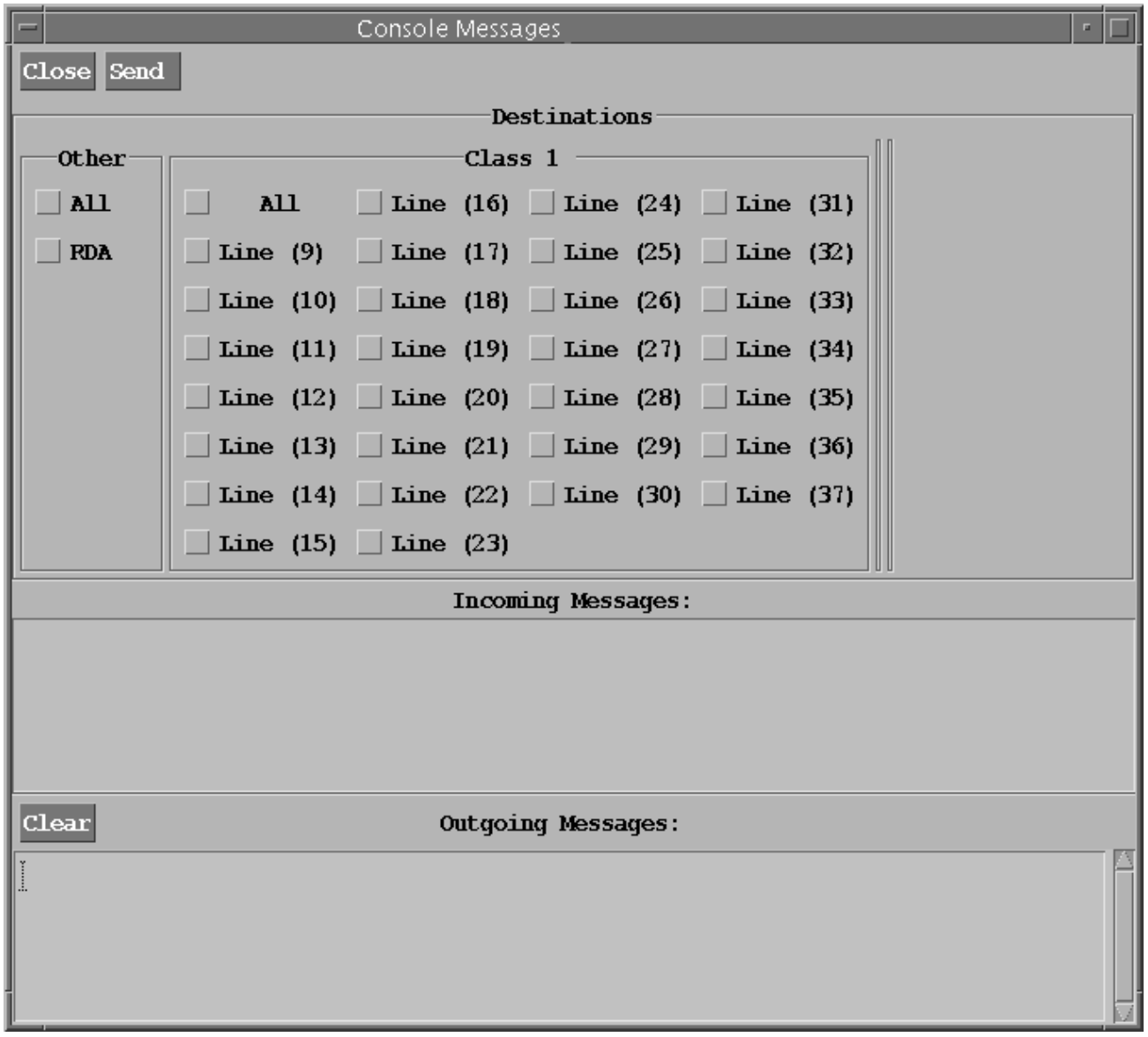

Figure 4–51. Console Messages Window

4.7.2.1.7 Environmental Data. Clicking on the **ENVIRON DATA** (Environmental Winds) icon opens the Environmental Data Editor window.

NOTE

When the RPG HCI is used to make a significant change to the system, a warning_popup window opens that restates the change that is about to take effect. In some cases, the user is informed that the new selection will take effect at the beginning of the next volume scan. The user must then decide whether to continue or cancel the selection by clicking on **Yes** or **No** to answer the question "Do you want to continue?". Other warning_popup windows simply require the user to click on **Continue** to proceed with the change. Once the user makes a selection within a warning_popup window, that window closes automatically.

4.7.2.1.8 HCI Properties. Clicking on the **HCI** icon opens up the HCI Properties window. See Figure 4–52. This window is used much like a menu, and from here the maintenance technician can select from the following buttons to change the corresponding RPG HCI properties. Clicking on the **Close** button closes the HCI Properties window.

- **Passwords**
- **Colors**
- **Font Properties**

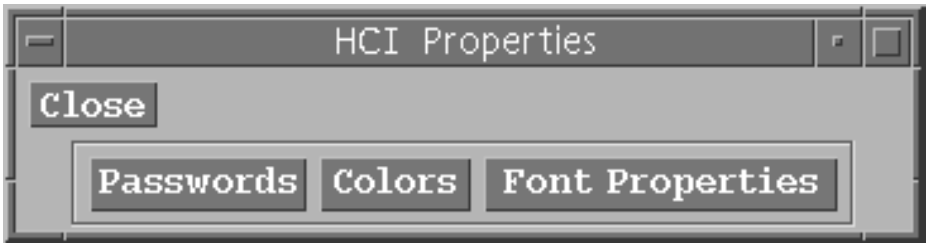

Figure 4–52. HCI Properties Window

4.7.2.1.8.1 Change Passwords Window. Clicking on the **Passwords** button in the HCI Properties window opens up the Change Passwords window. See Figure 4–53. This window is used to change the LOCA passwords that unlock the RPG HCI windows containing site specific adaptation data allowing the data to be changed by authorized personnel. The LOCAs are as follows:

- **Agency** (NWS, DoD, FAA)
- **ROC**
- **URC**

The maximum password length allowed when changing passwords with the HCI Properties Manager is 16 characters. To change any of these passwords, click on a LOCA to select it, enter the old password in the Old Password field, enter the new, case sensitive, password in the New Password field, and then enter the new password again in the Verify New Password field. A warning_popup window appears that states "The password has been changed!", with a **Continue** button. Click on **Continue** to close the warning_popup window. Clicking on the **Close** button closes the Change Passwords window.

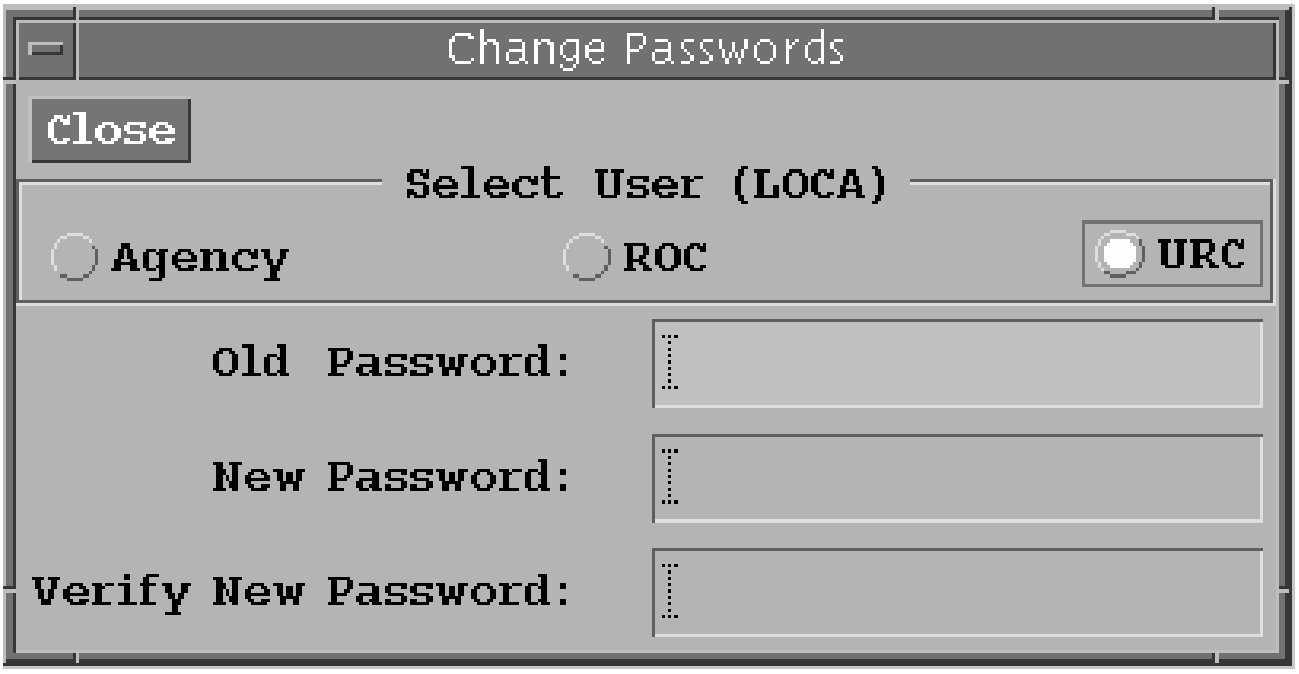

Figure 4–53. Change Passwords Window

4.7.2.1.8.2 Change Colors Window. The **Colors** button is reserved for future software builds and is not implemented at this time.

4.7.2.1.8.3 Font Properties Window. Clicking on the **Font Properties** button in the HCI Properties window opens up the Font Properties window. See Figure 4–54. This window is used to change the RPG HCI font properties. The user can select options for font size and point, with each one having a selectable range from 80 – 100, with a larger value equalling a larger font. The **Apply** button is greyed–out until a new font property is selected by the user. At that point, the **Apply** button is then displayed normally. After selecting a new font property, the user must click on the **Apply** button to use the new property. When a new font property is applied, it changes all of the RPG HCI fonts except those in the Main Menu, the window title bars, and the warning_popup windows. Clicking on the **Default** button sets both the size and the point values back to their default settings of 100. Clicking on the **Close** button closes the Font Properties window.

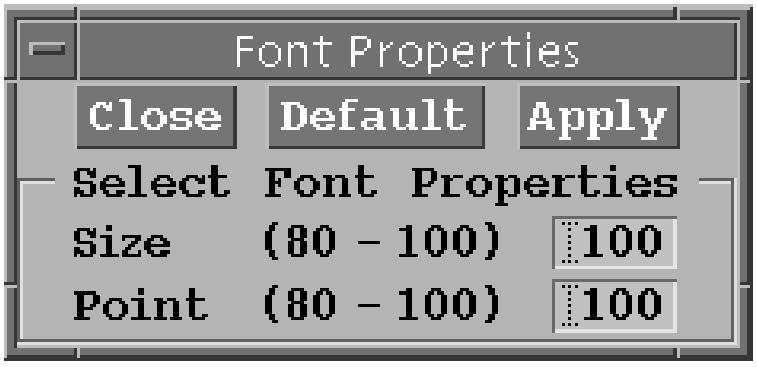

Figure 4–54. Font Properties Window

4.7.2.2 Tower/Radome Area. The Tower/Radome area displays current information regarding the RDA alarms and operational state, VCP, number of elevation scans in the VCP, volume number, start time, the antenna's elevation angle and azimuth position, and a link to the VCP Control window. The tower icon does not represent the actual tower height, simply the existence of a tower in the WSR–88D configuration, and it resizes to fit the window as the Main Menu is resized.

4.7.2.2.1 Alarm Area. When an alarm condition occurs, its alarm category appears in red directly to the left of the radome. When an alarm condition clears, its alarm category disappears from the Main Menu. All RDA alarms are included within one of the following eight different categories:

- **ARC** – Archive II
- **CTR** – Control
- **PED** – Antenna/Pedestal
- **RSP** – Receiver/Signal Processor
- **USR** – User Link
- **UTL** – Tower Utility
- **WID** – Wideband
- **XMT** – Transmitter

Clicking on any of the alarm categories opens the RDA Alarms window. See Figure 4–55. A detailed description of the RDA Alarms window is in paragraph 4.7.2.3.1.2 Alarms.

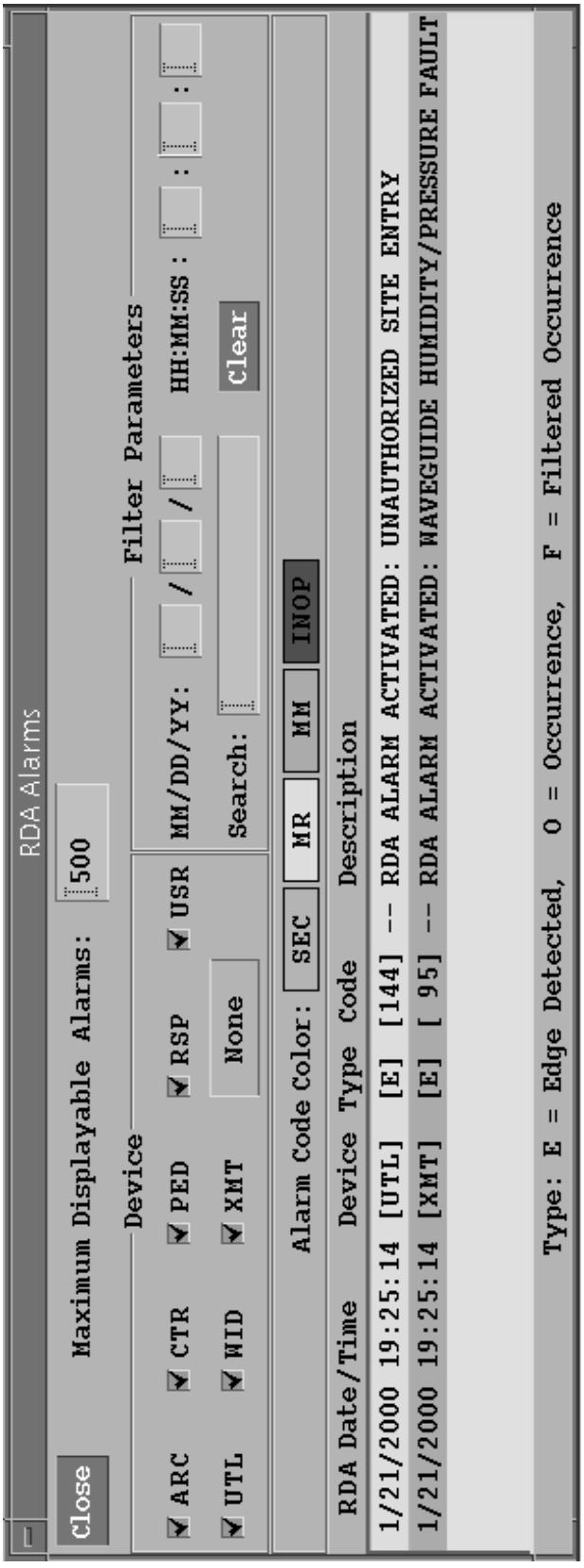

Figure 4–55. RDA Alarms Window

4.7.2.2.2 System Status Line. The color coded System Status Line is displayed directly above the radome and contains the current state of the RDA as well as any RDA alarm types that may be present. The possible states that can be displayed for the RDA are as follows:

- Start–up
- Standby
- Restart
- Operate
- Playback
- Off–line Operate

The possible RDA alarm types and associated color codes that can be displayed are as follows:

- Inoperable – Red
- Maintenance Mandatory – Orange
- Maintenance Required – Yellow
- Secondary – Green
- None – Green

4.7.2.2.3 VCP Button. The current VCP and mode of operation are displayed on the **VCP** button just to the right of the radome within the elevation angle lines. Clicking on the **VCP** button opens the VCP Control window. See Figure 4–56. From this window the user can see the current VCP highlighted, change to a local VCP that is stored at the RDA, download a remote VCP that is stored at the RPG, turn Auto PRF **Off** or **On**, access other windows, and restart the currently operating **VCP** as well as the current **Elevation** scan. Clicking on the **Adaptation** button on the Modify VCP: line opens the Modify VCP Adaptation Data window where the user can make changes to the RPG adaptation data version of any VCP. Clicking on the **Current** button on the Modify VCP: line opens the PRF Selection window where the user can make changes to the current VCP.

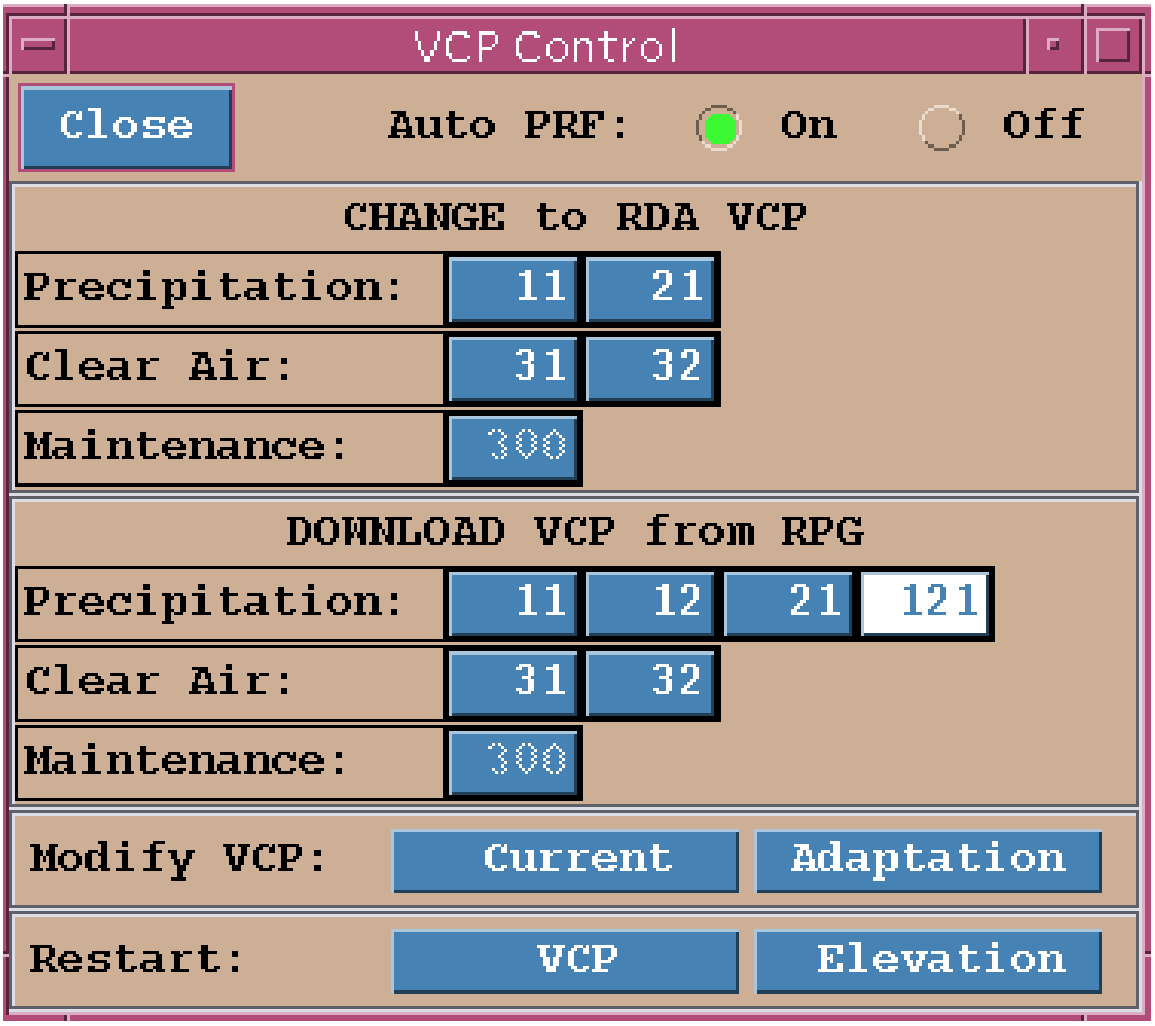

Figure 4–56. VCP Control Window

4.7.2.2.4 Volume Status Line. Just below the bottom elevation angle line, the current volume number and start date and time are displayed.

4.7.2.2.5 VCP Elevation Angle Display. Originating from the center of the radome and projecting out to the right are lines that represent each elevation angle of the currently selected VCP. The line that represents the antenna's current elevation angle is highlighted, and the antenna's current elevation angle is also displayed numerically in the center of the radome. While the RDA is in Standby and the antenna is in the park position, the antenna's elevation angle is not displayed.

4.7.2.2.6 Antenna Azimuth Position Display. While the system is in Operate, the antenna's azimuth position is shown on the Main Menu by a thick dark line that traces around the outside edge of the radome. The leading edge of the trace represents the current azimuth position of the antenna. When the leading edge of the trace meets the starting point of that elevation scan, completing a 360 degree trace around the outside edge of the radome, the completed circle disappears and then the whole process starts over again at the next elevation angle of operation. While the RDA is in Standby and the antenna is in the park position, the antenna's azimuth position is not displayed.

4.7.2.3 RDA Area. In the RDA area of the Main Menu there is information displayed regarding the current power source, Archive II status, as well as links to the RDA Alarms, RDA Control/Status, and Archive II windows.

4.7.2.3.1 RDA Icon. Right below the tower is the RDA icon that contains buttons labeled **Control** and **Alarms**.

4.7.2.3.1.1 Control. Clicking on the **Control** button within the RDA icon opens the RDA Control/Status window. See Figure 4–57. This window is used primarily to control the operation of the RDA, but it also provides links to other windows, and displays the following RDA status information on the bottom six lines of the window:

- Operational Mode: This line displays the Operational Mode of the RDA as either Operational or Maintenance. RDA Operational Mode is the same as Operate Mode at the RPG, and RDA Maintenance Mode is the same as Test Mode at the RPG.
- Control Authority: This line can display either No Action, Local Requested, or Remote Enabled. These messages give an indication of any pending requests for RDA Control. If there are no pending requests for RDA control, the No Action message is displayed. If the RPG has Remote Control of the RDA and the RDA requests Local Control, the Local Requested message is displayed. When the RPG then relinquishes Control to the RDA, the No Action message displays again. If the RDA then enables Remote Control, this line briefly displays the Remote Enabled message before Control automatically then gets transferred to the RPG, at which time this line again displays the No Action message.
- Transmitter Power: The value on this line is the same value that is displayed on the RDA MMI DIPD XMT screen on the XMTR AVG PWR line and in the RPG HCI RDA Transmitter Performance Data window on the XMTR Avg Power line. When the RDA is in Standby, this line displays a value of "Ø Watts".
- Calibration Correction: When the RDA has Automatic Calibration enabled, the value on this line is the same value that is displayed on the RDA MMI MAIN MENU screen on the CAL # line. When the RDA has Manual Calibration enabled, the value on this line is the same value that the user selects in the Reflectivity Calibration window. See Figure 4–58. and paragraph 4.7.2.3.1.1.1 for details.
- Interference Rate: When the Interference Suppression Unit (ISU) is installed in the RDA, the value on this line is the same value that is displayed on the RDA MMI MAIN MENU screen on the ISU line. When the ISU is not installed in the RDA, the value on this line is always Ø/sec, and the IDU TST DETECTION line in the Receiver's Performance Data screen will be set to Ø.
- Moments Enabled: Displays the base data moments that are currently being transmitted from the RDA to the RPG. When the RDA is in Operate mode this line displays the base data moments that the user has enabled in the Moments window. See Figure 4–59. The "R", represents Reflectivity, the "V", represents Velocity, and the "W" represents Spectrum Width. By default, all three base data moments are enabled. When the RDA is in Standby mode, the word "None" is displayed.

This status data automatically updates periodically as the RDA operates. Plus, when the wideband line is connected, clicking on the **Get Status** button at the top of the RDA Control/Status window updates this information if newer data is available. The text on the Get Status button is greyed–out, and the button's functionality is desensitized when the wideband line is disconnected. So, clicking on it doesn't update the status because new data is not available in that condition. Other windows that can be accessed from this window are as follows:

- The RDA Alarms window opens by clicking on the **RDA Alarms** button. See Figure 4–55 and paragraph 4.7.2.3.1.2 for details.
- The VCP Control window opens by clicking on the **VCP** button. See Figure 4–56 and paragraph 4.7.2.2.3 for details.
- The Moments window opens by clicking on the **Moments** button. See Figure 4–59 and paragraph 4.7.2.3.1.1.2 for details. The text on the button is greyed–out, and it's functionality is desensitized when the wideband line is disconnected or when the RDA is in control. That is, clicking on it does not open up the Moments window, preventing enabling and disabling of base data moments under these conditions.

The rest of the window is used to display and select operational options. Each area has two options except for the RDA State area which has five. An option that is currently selected is highlighted on the top line of that area and greyed–out underneath. An option that is not selected but is available to be selected is displayed in black within that area. Only one option at a time may be selected within each area except for the RDA Control area where both the **Enable Local (RDA)** and **Select Remote (RPG)** selections can be displayed in black at the same time when the RDA is in the Standby state. Under this condition, the word Either is highlighted within the RDA Control area. To initiate a change, the user simply clicks on the desired selection. As mentioned above, when a selection is made that will change the state of the RDA, a warning_popup window appears that restates the change that is about to take effect. Some of these windows inform the user that the new selection will take effect at the beginning of the next volume scan, and then require the user to decide whether to continue or cancel the selection by clicking on the **Yes** or **No** button to answer the question "Do you want to continue?". Other warning_popup windows simply require the user to click on a **Continue** button to proceed with the command or change. When the RDA is in control or when the wideband line is disconnected, none of these command options are available at the RPG and their buttons have a greyed–out display and their functionality is desensitized.

When either Archive II Playback or Interference Suppression are set to FALSE in the RDA Adaptation data, the selections will not be available from the RDA Control window. The Archive II Playback selection in the RDA State area will be greyed–out and desensitized. For Interference Suppression, its status shows up as Disabled and the Enabled selection is still displayed normally. However, if the user attempts to enable Interference Suppression, the Alarms line at the bottom of the RPG HCI Main Menu displays the message RDA ALARM ACTIVATED: INVALID RPG COMMAND RECEIVED, and the same message will appear in the RDA Alarms window.

For systems with spot blanking capability, an additional area is present within this window entitled Spot Blanking Status that allows the user to **Enable** or **Disable** Spot Blanking.

When the RPG is configured as an FAA Redundant system, a Lock RMS box also appears in the window, near the VCP button. Incoming RDA commands from the RMS are enabled when there is

no check mark in the Lock RMS box. Clicking on the Lock RMS box places a check mark there, and locks out incoming RDA commands from the RMS. If the user wants to also lock out incoming RPG commands from the RMS, a similar Lock RMS box is provided in the RPG Control window.

For the FAA redundant configuration, an additional area is present within this window entitled Redundant Control. In the FAA redundant configuration there are two RPGs, two RDAs, and only one Distant MSCF. This equipment is identified as channel 1 and channel 2. A channel consists of an RDA and an RPG, and only one channel at a time can be on–line. This is called the controlling channel. The Distant MSCF can display either one or both of the channel's RPG HCIs. However, the Distant MSCF is only connected to the controlling channel's RPG. In the FAA redundant system, the title bar of each window also contains the channel that it is associated with. It is either FAA:1 or FAA:2. The Redundant Control area is used to switch channels or change control from one channel to the other. Within this area the Local Channel and Redundant Channel Statuses are displayed as either Controlling or Non–controlling. The local channel is the channel whose RPG HCI the user is currently using and is displayed in the title bar of the window. The redundant channel is the channel that is not displayed in the title bar of the window. This area also displays a date and time associated with the adaptation data of both channels that is used to indicate whether the data in both channels matches. For details on how to match adaptation data between channels see paragraph 4.7.2.7.8, and for details on how to switch channels refer to the procedures in section 4.7.4.

The Spot Blanking Status and Redundant Control areas are password protected. In the upper right hand corner of the window is a button containing a graphic of a black lock in the locked position. The presence of this button indicates that this window contains password protected adaptable parameters. Clicking on the lock button opens up the Password window. See Figure 4–73. In the middle of the Password window is the LOCA area that contains a selection of the level of users that are permitted to edit the associated window. The possible selections are as follows:

- **Agency** (NWS, DoD, FAA)
- **ROC**
- **URC**

Clicking on any of these selections does two things. First, the selection becomes active as indicated by the button filling in and the selection becoming outlined. Second, it changes the display of the password protected areas in the RDA Control window. The area(s) that change from black text to white text contain the commands that the selected User (LOCA) can obtain permission to enter. To actually obtain permission to enter those commands, the user must click on the Password field and then enter the correct, case sensitive, password for that LOCA and press **<CR>**. If the wrong password is entered, a warning_popup window appears stating that an invalid password has been entered. Once the **Continue** button in the warning_popup window has been clicked on, the user is then returned to the Password window where the Password field is highlighted and ready for input. When the correct password is entered, the Password window closes, and the user is returned to the RDA Control window where the area(s) that contain password protected commands are now highlighted in light blue. Also, the lock button now contains a graphic of a red lock in the unlocked position along with the Authority that unlocked it. Clicking on the lock button again returns the window to its normal display and disables the ability to enter password protected commands. The lock graphic also changes back to being displayed in black and in the locked position.

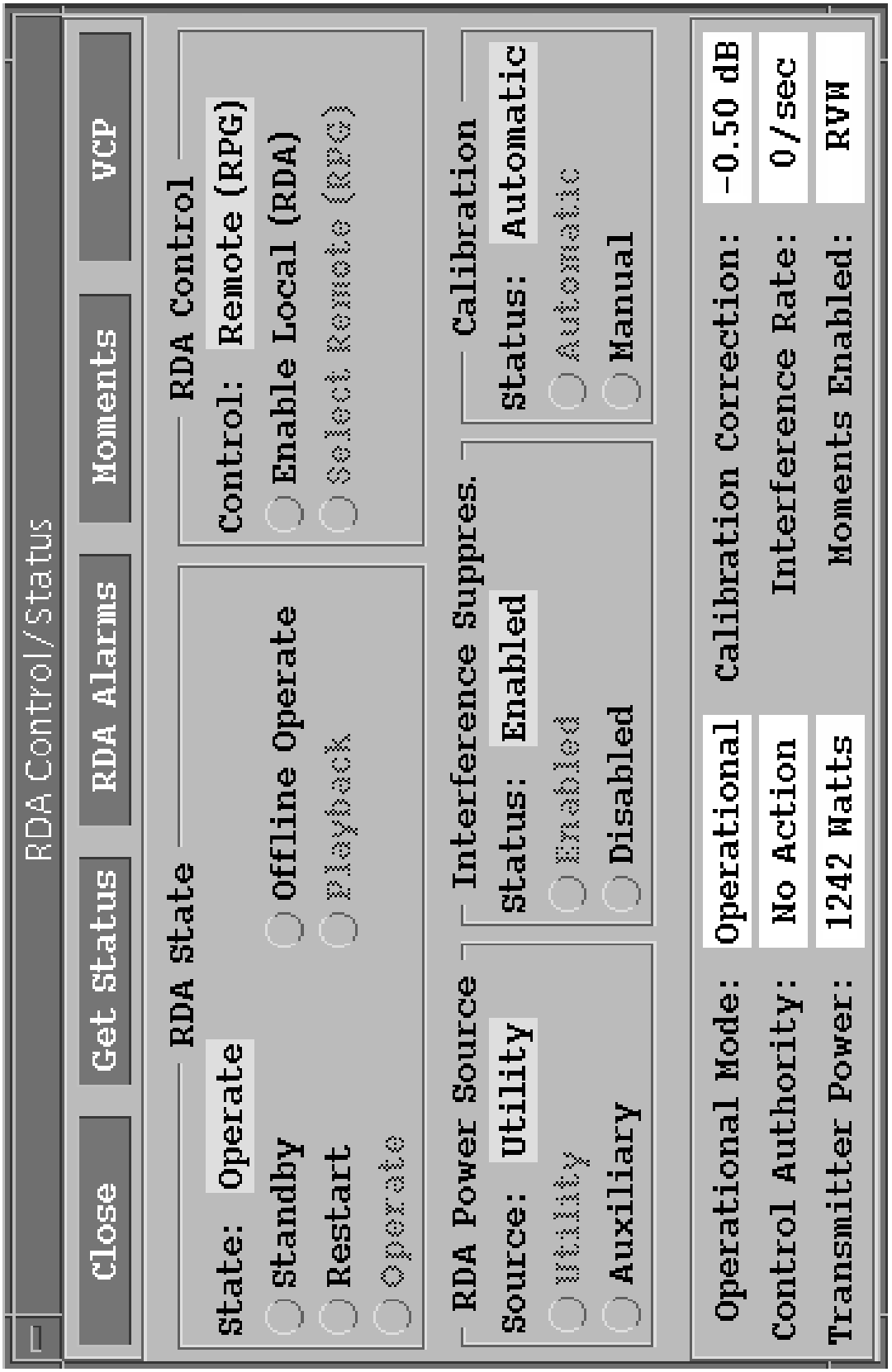

Figure 4–57. RDA Control/Status Window

4.7.2.3.1.1.1 Reflectivity Calibration. To open the Reflectivity Calibration window, Figure 4–58, the wideband line must be connected and the RPG must be in Control of the RDA. This is a seldom used window where the user can view the current Manual Calibration value, if Manual Calibration is in use, or select and then apply a new Manual Calibration value for the RDA. When a Manual Calibration value is applied, it overrides the RDA's default Automatic Calibration. From the Main Menu, this window is opened by clicking on the **Control** button within the RDA icon and then clicking on the **Manual** selection in the Calibration area of the RDA Control/Status window. This window can also be opened by clicking on the word **AUTO** if it is displayed on the Calib line in the Status Area in the lower right hand portion of the Main Menu. To select a Manual Calibration value, use the left mouse button to simply click and drag the **slider bar** to the left or to the right. The value displayed above the bar changes as the bar is moved. The selectable values range from –10.00 dBZ on the far left to +10.00 dBZ on the far right in increments of 0.25. Letting go of the slider bar when it is in between increments causes the Manual Calibration value to snap to the nearest 0.25 increment. Once the desired value is displayed above the slider bar, the user must click on the **Apply** button to put the selection into use. At that point, a warning_popup window appears that restates the change that is about to take effect, informs the user that the selection will take place at the beginning of the next volume scan, and requires the user to decide whether to continue or cancel the selection. Clicking on the **No** button closes the warning_popup window and returns the user to the Reflectivity Calibration window without applying the change. Clicking on the **Yes** button closes the warning_popup window, returns the user to the previous window, either the RDA Control/Status window or the Main Menu, while the system changes to Manual Calibration and applies the selected calibration value at the beginning of the next volume scan. Clicking on the **Close** button simply closes the Reflectivity Calibration window and returns the user to the previous window. If the user selects a new Manual Calibration value within this window, but then clicks on the **Close** button without clicking on the **Apply** button first, this window closes without the change taking effect. To select a different Manual Calibration value when Manual Calibration is already in use, either click on the **Manual** selection again in the Calibration area of the RDA Control/Status window, or click on the **[X.XX]** calibration value that is displayed on the Calib line of the Status Area in the lower right hand portion of the Main Menu to re–open the Reflectivity Calibration window. To enable Automatic Calibration when Manual Calibration is in use, either click on the **Automatic** selection in the Calibration area of the RDA Control/Status window, or click on the word **MANUAL** if it is displayed on the Calib line of the Status Area in the lower right hand portion of the Main Menu, and then click on the **Yes** button within the warning_popup window.

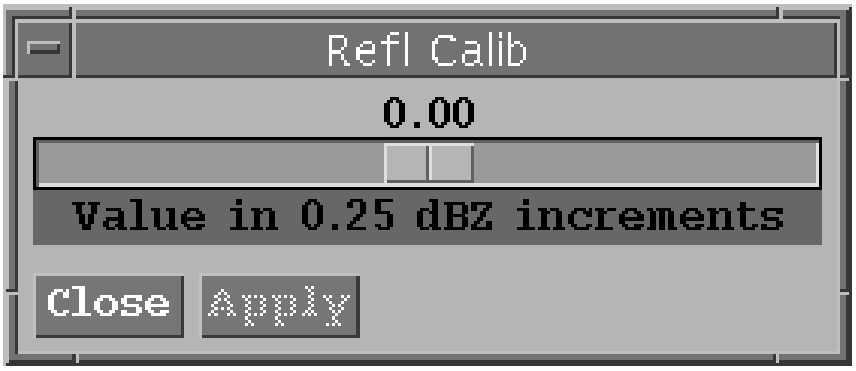

Figure 4–58. Reflectivity Calibration Window

4.7.2.3.1.1.2 Moments. The Moments window, Figure 4–59, displays the base data moments that are currently being transmitted from the RDA to the RPG and allows the user to change the selection of those moments. From the Main Menu, this window is opened by clicking on the **Control** button within the RDA icon and then clicking on the **Moments** button within the RDA Control/Status window. The Moments button will be greyed–out, and it's functionality desensitized when the wideband line is disconnected or when the RDA is in Control. So, clicking on it will not open the Moments window. This prevents any change in the selection of base data moments for transmission under these conditions. Within the Moments window, the user can enable or disable any or all three of the base data moments, Reflectivity, Velocity, and Spectrum Width. When the window opens, a check mark is present in the box next to each moment that is currently being transmitted from the RDA to the RPG, which is not to be confused with the moments that are currently selected for transmission. So, if the Moments window is opened when the RDA is in Standby, there will not be a check mark next to any of the moments, even though all three have probably been selected for transmission. This is because the RDA doesn't transmit any base data to the RPG while it is in Standby. The user can select any combination of moments, but by default, all three moments are enabled. Each one is a toggle type of selection. Clicking on it once deselects it and removes the check mark from the box, and then clicking on it again selects it, causing the check mark to appear in the box. Once the selection is complete, the user must click on the **Apply** button to put the new selection into use. Next, a warning_popup window appears that restates the change that was made, informs the user that the change will be implemented at the beginning of the next volume scan, and requires the user to decide whether to continue or cancel the selection. Clicking on the **No** button closes the warning_popup window and returns the user to the Moments window without applying the change. Clicking on the **Yes** button closes the warning_popup window, returns the user to the Moments window, and the system applies the change in the transmission of base data moments at the beginning of the next volume scan. Clicking on **Close** closes the Moments window and returns the user to the RDA Control/Status window. If the user makes a change in the Moments window, but then clicks on the **Close** button without clicking on the **Apply** button first, this window closes without the change taking effect. When the transmission of any moment is disabled, it will be displayed in white on the Main Menu when the RDA is in Operate mode, and will not be present on the Moments Enabled line at the bottom of the RDA Control/Status window.

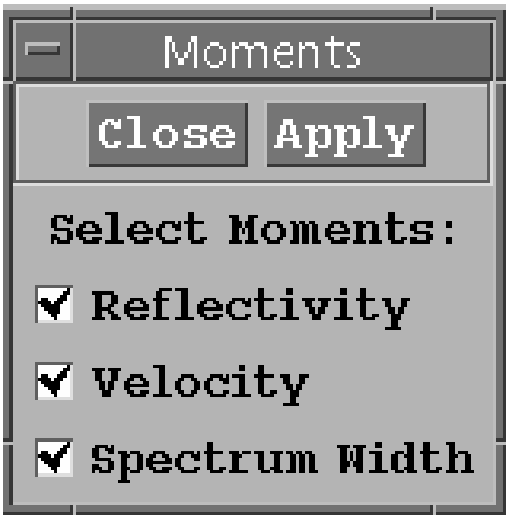

Figure 4–59. Moments Window

4.7.2.3.1.2 Alarms. Clicking on the **Alarms** button within the RDA icon, or clicking on any alarm category that may be present to the left of the Radome on the Main Menu, opens the RDA Alarms window. See Figure 4–55. This window is used to display all of the alarms that occur at the RDA. As a new alarm is seen in the display area, it is placed at the top of the list. By default, the window displays the 500 newest RDA alarms. This value can be adjusted by changing the Maximum Displayable Alarms value. This field has a range from 0 to 1000. Each alarm is also color coded and defined on the Alarm Code Color line as follows:

- Red – INOP (Inoperable)
- Orange – MM (Maintenance Mandatory)
- Yellow – MR (Maintenance Required)
- Tan – SEC (Secondary)

The headings over the alarm display area are defined as follows:

- Date – The date that the alarm occurred.
- Time – The time that the alarm occurred.
- Device – The specific area of the RDA where the alarm occurred.
- Type – E = Edge Detected, O = Occurrence, F = Filtered Occurrence as defined on the bottom line of the window.
- Code – Each RDA alarm has a corresponding code number. The code numbers are detailed in NWS EHB 6–510–1, Appendix H.
- Description – The detailed description of the actual alarm. This area also informs the user if the alarm is being activated or cleared.

This window also provides four ways for the user to filter through the list of alarms to display only the specific alarms desired. The Device area contains eight categories or specific areas within the RDA where alarms occur. Clicking on any device category serves as a toggle that alternately displays and removes a check mark as well as includes and removes that category of alarm from the displayed list. When a check mark is present, that device category is included in the list displayed, and when no check mark is present that device category is excluded from the list. Any combination of device categories can be selected for display. Clicking on the **None** button removes all of the check marks in the Device area, clears out the display area, and changes the name of the button from **None** to **All**. Clicking on the **All** button places a check mark in every category in the Device area, causes every available alarm to appear in the display area, and changes the name of the button from **All** to **None**. The absence of a check mark next to any device category does not prevent that type of alarm from being logged, but simply prevents it from being displayed. So, for example, if the user only wanted to look at the transmitter alarms, the user could click on every other device category to remove its check mark until only the XMT category was checked and then only the transmitter alarms would be present in the display area. Or, the same thing could be accomplished by simply clicking on the **None** button and then clicking on the **XMT** category.

The Search field in the Filter Parameters area of the window can also be used to filter through all of the alarms. This type of search only searches through the Description area of the alarm line. It does not include the "RDA Alarm Activated/Cleared" field. It only includes the actual alarm text. In addition, this type of search will only search through and display the types of alarms that are currently selected in the Device area of the window. So, in order to search through all of the RDA alarms, the user must first click on the **All** button in the Device area. Next, simply click on the Search field to activate it, enter the desired character pattern to search for, then press the **<CR>** key. If any alarms are found that contain the selected character string, they are displayed with the most recent alarm at the top of the list. If no alarms are found that contain the selected character string, the alarm display area simply goes blank. The best way to initiate a subsequent search of this type is to first click on the **Clear** button to delete any characters that are still present in the Search field and then begin all over again. To return to a full display of all alarms simply click on the **Clear** button.

The Filter Parameters area of the window also contains other fields that can be used to filter through all of the alarms. One is for the date which is titled MMDDYY, and the other one is for the time which is titled HHMMSS. The names of these fields represent the required format of the entry. Once the **<CR>** is pressed, all of the alarms that occurred before the date or time that was entered by the user are displayed. To return to a full display of all alarms simply click on the **Clear** button.

4.7.2.3.2 Power Source. Just to the left of the RDA icon is a graphic representing the current power source of the RDA shelter. The utility pole graphic represents the utility or commercial power source while the shelter and fuel tank graphic represents the generator or auxiliary power source and fuel level. A message below the graphic informs the user whether the generator is on or off. The user can initiate a power transfer by clicking on either graphic.

4.7.2.3.3 Archive Base Data. The Archive Base Data icon is located directly below the RDA icon and represents the archive II device. The status of the device is displayed right below the icon and can be any of the following:

- Unknown – There is no Archive II device installed in the RDA.
- Installed – Installed but not currently active in any way.
- Search – Preparing to playback data by doing a binary search for a selected file already on the tape. This can only be seen when Archive II Playback is set to TRUE in the RDA Adaptation Data.
- Check Label – Checking for a tape label.
- Fast Forward – Fast forwarding the tape to the end of data to begin recording data.
- Tape Transfer – In the process of changing tape cartridges.
- Loaded – Ready to begin recording at the beginning of the next VCP.
- Record – Currently recording data.
- Playback – Currently playing back data. This is possible only when Archive II Playback is set to TRUE in the RDA Adaptation Data.

Clicking on this icon brings up the Archive II window. See Figure 4–60. The highlighted Current Archive II Status field at the bottom of the window displays the same message that appears on the Main Menu that is described above. This window also contains the following four buttons:

- **Close** – Clicking on this button closes the Archive II window.
- **Record** – Clicking on this button opens up the Record Base Data Window where archive II recording is initiated. See Figure 4–61 and paragraph 4.7.2.3.4.
- **Playback** – This button can only become active if Archive II Playback is set to TRUE in the RDA Adaptation Data. Clicking on this button opens up the Playback Base Data window where archive II playback is initiated. For more details of how to use the Archive II Playback Base Data window refer to the NWS EHB 6–526 RPG Operations Instructions Manual.
- **Stop** – Clicking on this buttons stops the Archive II recording process.

The Record, Playback, and Stop buttons are greyed–out and desensitized when the wideband line is disconnected, when the RDA is in control, or when the archive II device is busy.

This window also contains a Volume Status area where two different values are highlighted. One value is next to the Tape # line that displays which tape cartridge of the 10 available Archive II jukebox cartridges is currently in use. Next to the Volumes Remaining line the value displayed indicates the approximate number of volumes that the current tape can record before it fills up. When the archive II device isn't recording, the Volumes Remaining field displays a value of Ø.

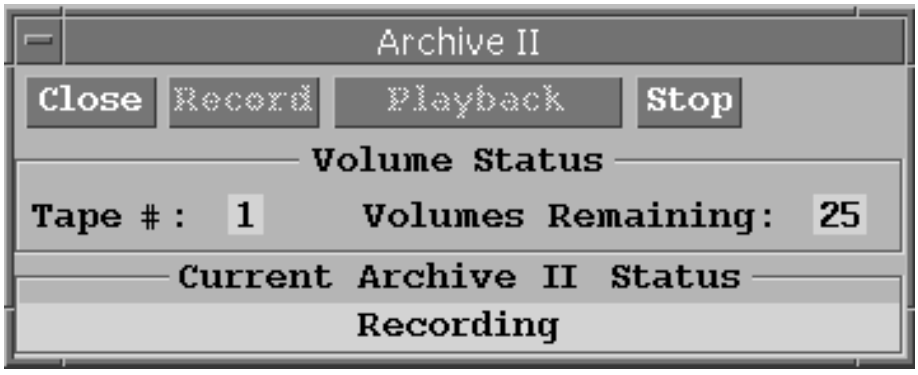

Figure 4–60. Archive II Window

4.7.2.3.4 Starting/Stopping Base Data Recording. The Record Base Data window, Figure 4–61, is opened by clicking on the **Record** button within the Archive II window. This window is used to begin the process of recording base data on the archive II device. The user can select the number of volume scans to be recorded (1–900), or choose to record all volume scans by entering a 0 in the Record field, which is the default value. Once the desired number of scans has been entered, the user must click on the **Activate** button to begin recording. A warning_popup window appears requiring the user to decide whether to continue or cancel the selection. Clicking on the **Yes** button closes the warning_popup window and starts the record process. Clicking on the **No** button closes the warning_popup window and returns the user to the Record Base Data window without starting the record process. Clicking on the **Close** button closes the Record Base Data window. Clicking on the **Stop** button in the Archive II window stops the Archive II base data recording process.

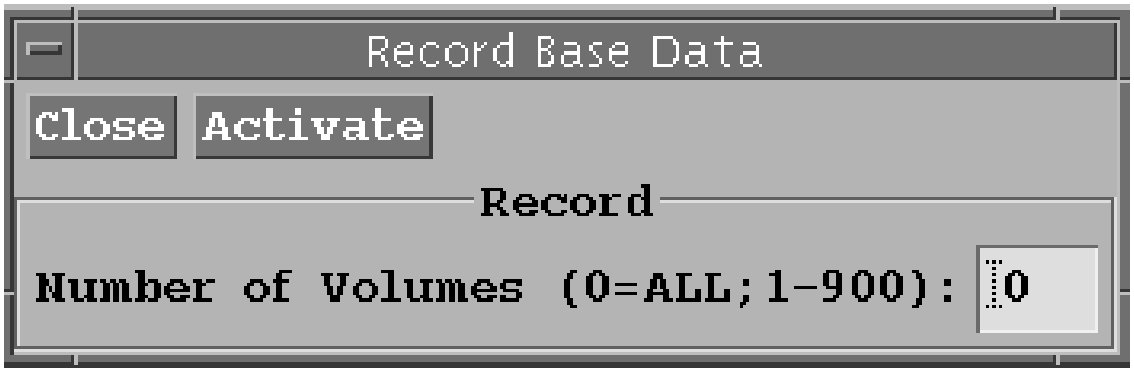

Figure 4–61. Record Base Data Window

4.7.2.3.5 Archive Base Data Data Flow. When the wideband line is connected and the Archive II device is properly installed in the RDA, a green bar connects the RDA icon with the Archive Base Data icon. This green bar represents the connection between the Archive II device and the RDA processor. A small black box moves repeatedly within the green bar from one end to the other when the Archive II device is enabled representing base data moving over the connection. If the Archive II device is recording data, the black box moves repeatedly from the top of the green bar to the bottom, or from the RDA icon to the Archive Base Data icon. If the Archive II device is playing back data, the black box moves the other way, from the Archive Base Data icon to the RDA icon. If the wideband line is disconnected or the Archive II device is not properly installed, no green bar is present between the RDA and Archive Base Data icons.

4.7.2.4 RPG Area. In the RPG area of the Main Menu there are links to the RPG Control, RPG Products, and RPG Status windows as well as information displayed regarding the Archive III status.

4.7.2.4.1 RPG Icon. Near the center of the Main Menu is the RPG icon that contains buttons labeled **Control**, **Products**, and **Status** for all configurations. When the RPG is configured as an FAA Redundant system, an **RMS** button is also present. This button is blue when the connection from the RPG to the RMS is good and both systems are up, and it is red when either system is down or the connection has failed. Clicking on the **RMS** button brings up the RMS Messages window which allows the user to send a free text message to the RMS or to inhibit incoming RPG and RDA commands from the RMS. No figure is provided here, nor any further description given of the RMS Messages window, so for more information refer to the NWS EHB 6–526 RPG Operations Instructions Manual.

4.7.2.4.1.1 Control. Clicking on the **Control** button within the RPG icon brings up the RPG Control window. See Figure 4–62. This window displays the current State and Mode of the RPG along with the default weather mode of the RPG on startup. It can be used to Restart, Shutdown, change the Mode, and change the default weather mode on startup of the RPG. The current State and Mode of the RPG are displayed near the top of the window. The possible States that can been displayed, the colors that they are highlighted in, and the meaning of each one are as follows:

- OPERATE – green – All RPG processes are running.
- TRANSITION – yellow – The RPG is restarting all processes. The RPG is either going from Operate to Shutdown/Standby, or from Shutdown/Standby to Operate.

- STANDBY – yellow – All RPG processes are stopped except the MSCF. When it is brought back up, there will not be a clean initialization of the RPG.
- SHUTDOWN – red – All RPG processes are stopped including the MSCF. When it is brought back up, there will be a complete, clean initialization of the RPG.
- FAILED – red – The RPG has failed for some reason.
- POWER FAIL – red – The input power to the RPG has failed.
- UNKNOWN – red – There is an operational problem in the RPG that is unknown.

The possible Modes that can been displayed, the colors that they are highlighted in, and the meaning of each one are as follows:

- OPERATE – green – The RPG's Operate Mode is the standard mode of operation and corresponds to the RDA's Operational Mode. In this mode, all narrowband lines are enabled and the user can only select the operational VCPs.
- TEST – yellow – The RPG's Test Mode is a non–standard mode of operation and corresponds to the RDA's Maintenance Mode. In this mode, all narrowband lines are disabled except for the primary line and the user can select all of the VCPs including the Maintenance VCP 300.

The Mode area contains two buttons, **Operate** and **Test**. The current mode is desensitized, preventing selection of the mode that the RPG is already in. To select the other RPG Mode of operation, click on its button and then click on **Continue** in the warning_popup window that appears. To change from Test to Operate mode a normal VCP must first be selected and activated.

Clicking on the **All Task** button in the Restart area of the window restarts all of the RPG tasks or processes. This can be done while the system is in either the OPERATE or the STANDBY state.

Clicking on the **Options** button in the Restart area of the window brings up the RPG Init Options window which, by default, is locked when it initially opens. See Figure 4–63. This is used to initialize various RPG components. The **Activate** button and the Initialization Options area are only sensitized when the window is unlocked by clicking on the lock button and entering the correct password. The only state in which items are selectable is SHUTDOWN. Within the Initialization Options area is the following list of items that perform the various maintenance tasks described:

RPG System Status Log: Deletes all messages from the RPG system status log file.
Hydromet: Initializes the hydromet database; excluding the rain gage database.
Gage Database: Initializes the rain gage database only.
Product Database: Deletes all products from the RPG products database.
RDA Alarm Log: Deletes all RDA alarm messages in the RDA alarms log file but does not delete RDA alarm messages in the system status log file.
RPG State Data: Initializes RPG state data.
RPG Task Log Files: Deletes all messages in all RPG task log files.

Click on any combination of items to select them. Once an item is selected, clicking on the **Activate** button brings up a warning_popup window that states: "You are about to initialize all of the data selected in the Initialization Options list. Do you want to continue?".

Clicking on **No** closes the warning_popup window without initializing anything. Clicking on **Yes** invokes the initialization task associated with each item that is selected. Most items generate a system log message which is displayed on the status line of the RPG Control/Status window. Clicking on the **Close** button closes the RPG Init Options window and returns the user to the RPG Control window.

Clicking on the **Standby** button in the Shutdown area of the RPG Control window while the RPG is in the OPERATE State stops all of the RPG tasks or processes except the MSCF.

Clicking on the **Off** button in the Shutdown area of the RPG Control window while the RPG is in the OPERATE State stops all of the RPG tasks or processes including the MSCF. This transitions the RPG to the SHUTDOWN State.

In the lower portion of the RPG Control window, the default weather mode and the startup volume coverage patterns for each mode are displayed. To initiate a change of default weather mode or default VCP, simply click on the padlock icon in the upper right corner of the window to open the password window. Select a LOCA radio button and enter the appropriate authorized password followed by the Enter key. The Default Weather Mode and Default VCP selection buttons will become sensitized. To change the Default Weather Mode selection, simply click on the button. The possible weather modes that can be selected are as follows::

- **Precipitation (A)**
- **Clear Air (B)**

To change the startup VCP for either mode, click the button for the desired VCP. The possible VCPs for Mode A that can be selected are:

- 11
- 12
- 21
- 121

The possible VCPs for Mode B that can be selected are:

- 31
- 32

When the RPG is configured as an FAA Redundant system, a Lock RMS box also appears in the window, near the Close button. Incoming RPG commands from the RMS are enabled when there is no check mark in the Lock RMS box. Clicking on the Lock RMS box places a check mark there, and locks out incoming RPG commands from the RMS. To lock out incoming RDA commands from the RMS also, a similar Lock RMS box is provided in the RDA Control/Status window.

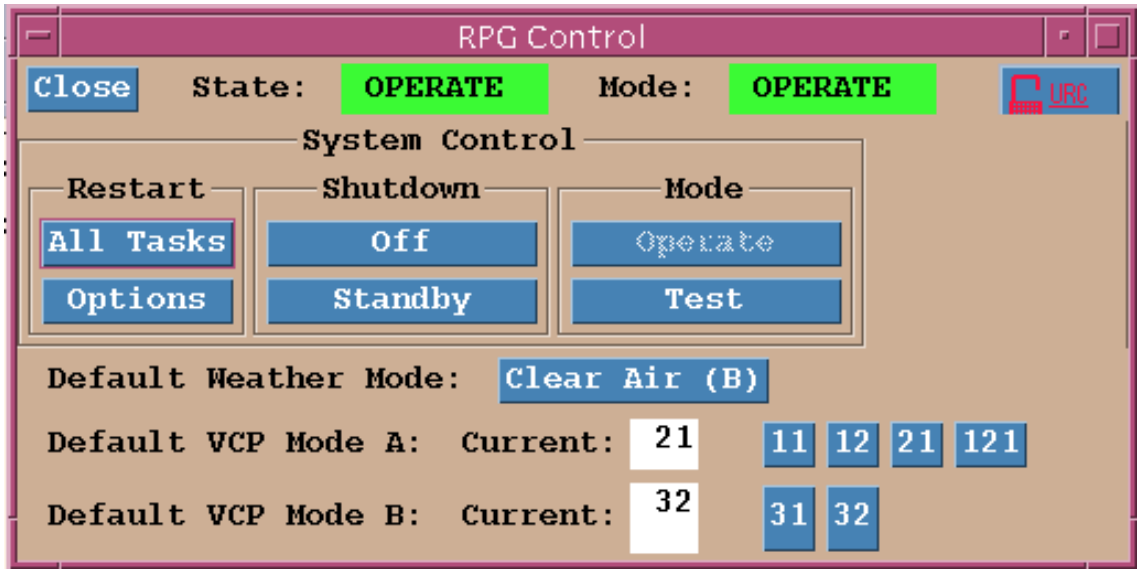

Figure 4–62. RPG Control Window

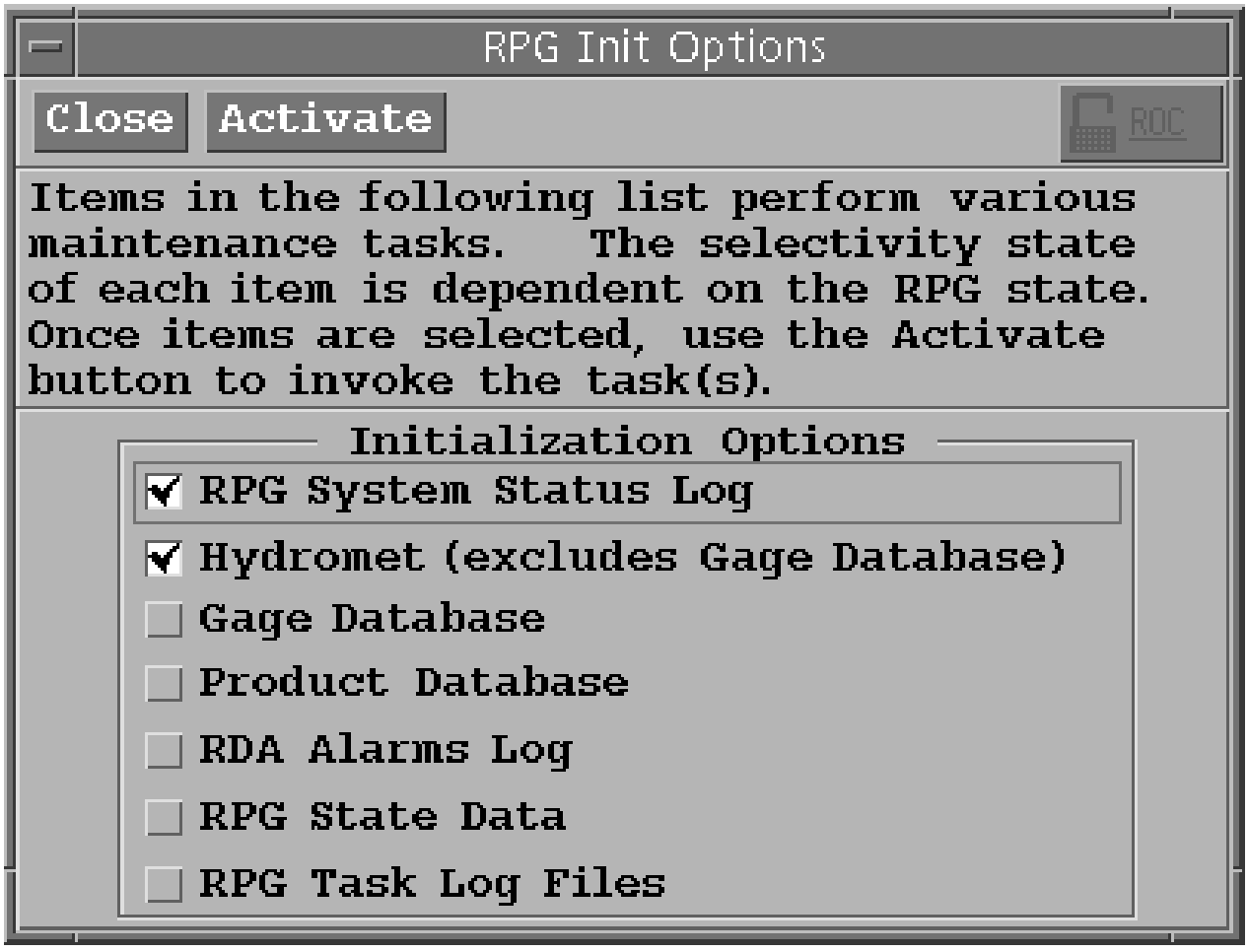

Figure 4–63. RPG Init Options Window

4.7.2.4.1.2 Products. Clicking on the **Products** button within the RPG icon brings up the RPG Products window. See Figure 4–64. Refer to NWS EHB 6–526 for the details of this window.

Figure 4–64. RPG Products Window

4.7.2.4.1.3 Status. Clicking on the **Status** button within the RPG icon brings up the RPG Status window. See Figure 4–65. This window is used to display System Status Log Messages, as well as Alarm, and Error information regarding RPG software tasks. This information is displayed in a list near the center of the window in the System Log Messages area. By default, when the window is opened, all three types of messages are included in the list. Scroll bars are provided to assist the user in searching for specific messages. Two other tools are available to assist the user in filtering through the list of messages. These are found in the Message Filter area of the window and are called Display and Search filters. The Display line contains three color coded selections called **Status** (tan), **Alarm** (red), and **Error** (yellow). Clicking on any of these selections serves as a toggle that alternately displays and removes a check mark as well as includes and removes that type of message from the displayed list. When a check mark is present, that type of message is included in the list displayed, and when no check mark is present that type of message is excluded from the list. Any combination of messages can be selected for display. The absence of a check mark next to any type of message does not prevent that type of message from being logged, but simply prevents it from being displayed.

The Search field in the Message Filter area of the window can also be used to filter through all of the messages. This type of search only searches through and displays the types of messages that are currently selected on the Display line. So, in order to search through all of the RPG messages, the user must first ensure that there is a check mark next to all three types of messages on the Display line. Next, simply click on the Search field to activate it, enter the desired character pattern to search for, then press the **<CR>** key. If any messages are found that contain the selected character string, they are displayed with the most recent message at the top of the list. If no messages are found that contain the selected character string, the System Log Messages area simply goes blank. The best way to initiate a subsequent search of this type is to first click on the **Clear** button to delete any characters that are still present in the Search field and then begin all over again. To return to a full display of all messages simply click on the **Clear** button. A **Print Log Messages** button is provided at the top of the window to print the System Log Messages to the MSCF printer.

The current RPG State, RPG Mode of operation, and Wx Mode selected for startup are color coded and displayed near the top of the window.

Also near the top of the window is the RPG Alarm Summary area. This area contains three categories of RPG alarms entitled Maintenance Required, Maintenance Mandatory, and Load Shed. Under each category a color coded list of possible alarms is displayed. A GREEN display means that no alarm condition exists, YELLOW means that an error or warning condition exists, and RED means that an alarm or failure condition exists.

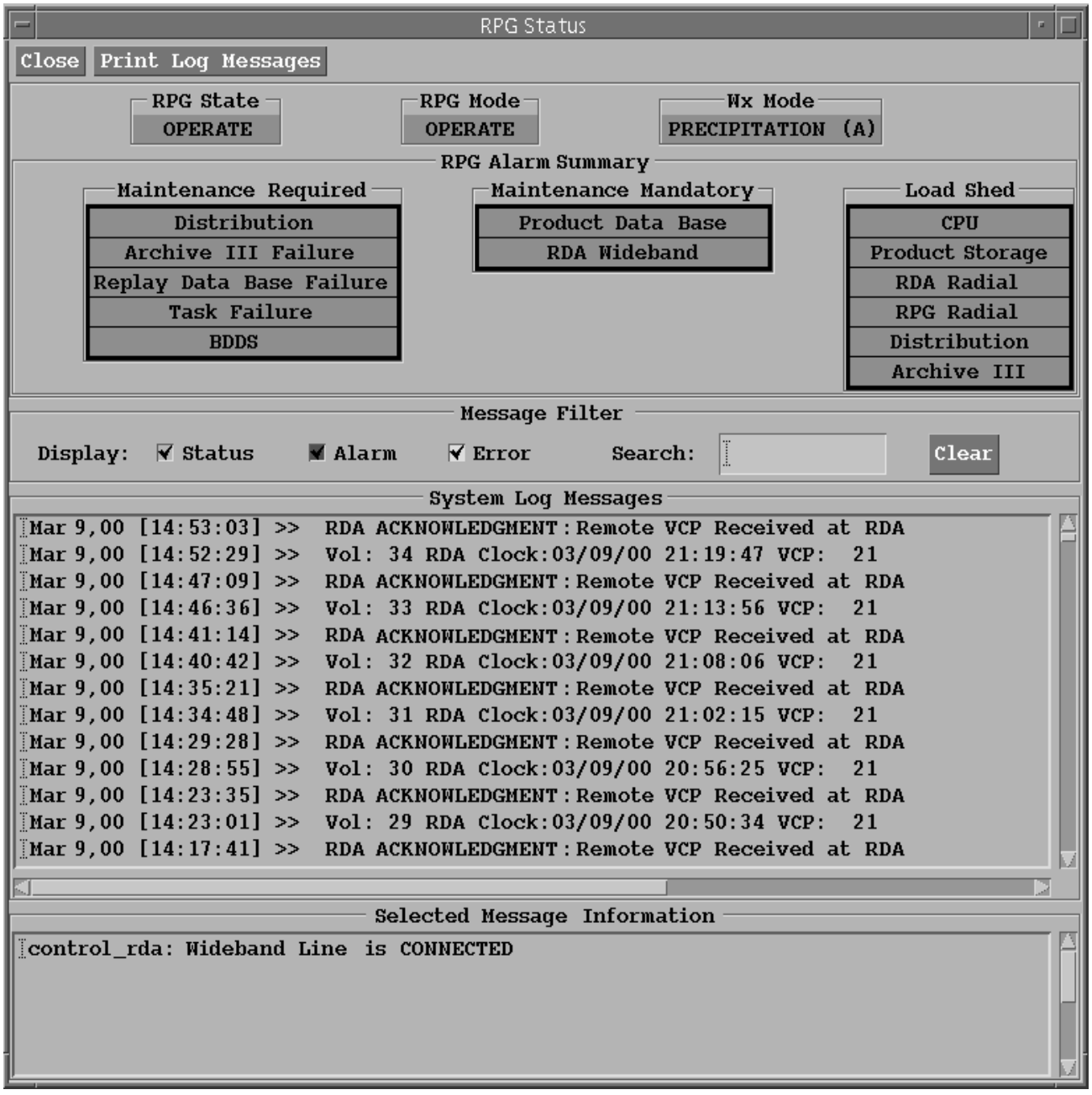

Figure 4–65. RPG Status Window

4.7.2.4.2 Archive Products. This icon, located just below the RPG icon, represents the archive III device, and clicking on it brings up the Archive III Control/Status window. See Figure 4–66. Clicking on the **Close** button in the upper left hand corner of the window closes the Archive III Control/Status window. The **Unmount Disk** button is greyed–out and desensitized when the device is active, and displayed normally when the device is idle. Clicking on it when the device is idle causes the Jaz disk to be unmounted. The status of Archive III will first go to Unmount Pending with a yellow background, and then to Not Mounted with a red background. The user can then eject the disk manually and insert a new one if desired. In the upper right hand corner of the window is a text message that displays the current status of Archive III. It normally will read either Active with a green background, Idle with a yellow background, or Inactive with a red background. This window is divided into the following five areas that are described in the paragraphs below:

- Read from Archive
- Auto Archive Control/Status
- Archive III Status
- Archive Products by Time Span
- Archive One Product

4.7.2.4.2.1 Read from Archive. This is on the top line of the window and contains two buttons, **Product** and **Status** . If these buttons are greyed–out, then the Archive III device is either not functioning, not mounted, or is not installed. To read Archive III products or status logs, refer to the detailed procedures in the NWS EHB 6–526 RPG Operations Instructions Manual.

4.7.2.4.2.2 Auto Archive Control/Status. This area contains both the control and status display of the products and status auto archive. There are three color coded control buttons on both the Products and the Status line: **Record**, **Pause**, and **Stop**. The buttons under the Record column are green when auto archive is on. The buttons under the Pause column are yellow when the auto archive is paused. The buttons under the Stop column are red when auto archive is off.

Clicking on the button(s) under the Record column on either or both the Products or Status line will activate the auto archive. The **Record** button(s) turns green and a warning_popup appears that states: "You are about to start Auto Archive Products/Status. Do you want to continue?" Click on either the **Yes** or **No** button. If **Yes**, then the green **Record** button(s) will remain on. If **No**, then the previous status (Pause or Stop) will be restored with the appropriate color.

Clicking on the button(s) under the Pause column on either or both the Products or Status line will activate pausing the auto archive. The **Pause** button turns to yellow and a warning_popup appears that states: "You are about to pause Auto Archive Products/Status. Do you want to continue?" Click on either the **Yes** or **No** button. If **Yes**, then the yellow **Pause** button(s) will remain on. If **No**, then the previous status (Record) will be restored with the green color. Auto archive can not be commanded from Stop to Pause. To restart recording, the user must click on the **Record** button(s) and answer the warning_popup accordingly.

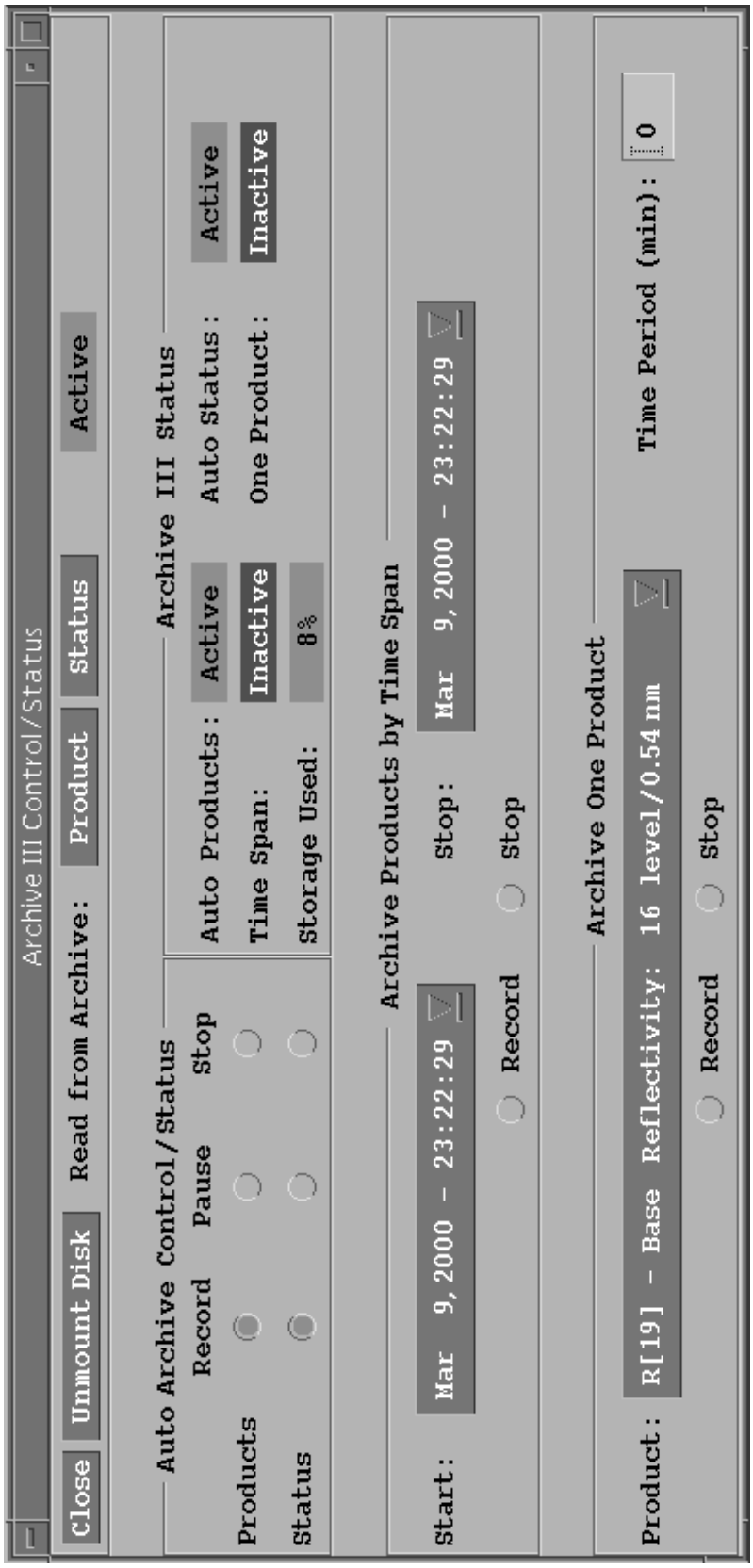

Figure 4–66. Archive III Control/Status Window

Clicking on the button(s) under the Stop column on either or both the Products or Status line will activate stopping the auto archive. The **Stop** button(s) turns to red and a warning_popup appears that states: "You are about to stop Auto Archive Products/Status. Do you want to continue?" Click on either the **Yes** or **No** button. If **Yes**, then the red **Stop** button(s) will remain on. If **No**, then the previous status (Record or Pause) will be restored with the appropriate color.

4.7.2.4.2.3 Archive III Status. The area to the right of Auto Archive Control/Status is the Archive III Status area which contains five categories of information. They are Auto Products, Auto Status, Time Span, One Product, and Storage Used. For all categories except the Storage Used category, the information is color coded, automatically updated, and will either be Active (Green) or Inactive (Red). The Storage Used category is the same value that is displayed on the Main Menu as Used: X% and is color coded with green from 0% up to the Warning Threshold %. It becomes yellow when the device reaches the Warning Threshold %, and then becomes red at the Alarm Threshold %. There is no user input in this area. The thresholds are set by the user as load shed parameters in the Load Shed Categories window (Figure 4–72) that is described in paragraph 4.7.2.7.5.

4.7.2.4.2.4 Archive Products by Time Span. The third area of controls allows the user to archive products by a selected time span. The two blue boxes are used to identify the Start and Stop time. To select a Start time, click on the down arrow at the far right hand side of the box. A drop down menu appears with the available products that are currently in the data base listed by time in reverse chronological order. Click on the desired Start time. Once this selection has been made, the selected Start time becomes highlighted and is automatically transferred to the Start: box, and the drop down menu disappears. If the user decides not to select a Start time, simply click on the down arrow again and the drop down menu is retracted. Repeat the process for the Stop: box.

Once the Start and Stop times have been selected, click on the **Record** button at the lower left of center. If a Start and Stop time were accidently reversed, a warning_popup window appears that states: "The start time you selected is newer than the stop time you selected. Select new times from the list and try again." Click on the **Continue** button to return to the Archive III Control/Status window. If the Start and Stop times are valid, a different warning_popup window appears that states: "You are about to archive products between the times indicated in the menu. Do you want to continue?" Click on either the **Yes** or **No** button.

To stop the Archive Products by Time Span, click on the **Stop** button. A warning_popup window appears that states: "Do you really want to cancel all active archive products by time span operations?" Click on either the **Yes** or **No** button.

4.7.2.4.2.5 Archive One Product. The bottom area of controls allows the user to archive just one product for a selected period of time. To select a product, click on the down arrow at the right hand side of the Product: blue box. A drop down menu appears with the available products currently in the data base listed by product name. Click on the desired product name. Once this selection has been made, the selected product gets highlighted and is automatically placed in the Product: box, and the drop down menu disappears. If the user decides not to select a Product, simply click on the down arrow again and the drop down menu is retracted. Next, move the cursor to the Time Period (min) light blue box and click once. Once the blinking cursor is in the box, enter the desired number of minutes and press **<CR>**. Any value between 0 and 360 can be entered. If

the user enters a number outside of that range (up to eight digits can be entered) and presses **<CR>**, a warning_popup window appears that states: "You entered an invalid value of XXXXXXXX! The valid range is 0 to 360 minutes." Click on the **Continue** button, and the original value is automatically entered back into the box. The user must click in the box again to enter a valid number.

Once the Product and the Time Period have been selected, click on the **Record** button at the lower left of center. A warning_popup window appears that states: "You are about to archive the following product: (product listed here). Do you want to continue?" Click on either the **Yes** or the **No** button. If the user wants to stop the Archive One Product, click on the **Stop** button and a warning_popup window appears that states: "Do you really want to cancel all archive one product operations?" Click on either the **Yes** or the **No** button.

NOTE

For a more detailed description of how to use the Archive III Control/Status window refer to the detailed procedures in the NWS EHB 6–526 RPG Operations Instructions Manual.

4.7.2.4.3 Archive Products Status Lines. Two lines of status are displayed just below the Archive Products icon. The top line is not color coded and it will display one of the following messages:

- Installed
- Not Installed
- Not Mounted
- Active
- Idle

The right hand side of the bottom status line is color coded and it displays the percentage of the disk that is used as "Used: X%". The X% is green from 0% up to the Warning Threshold %. It becomes yellow when the device reaches the Warning Threshold %, and then becomes red at the Alarm Threshold %. These thresholds are set by the user as load shed parameters in the Load Shed Categories window (Figure 4–72) that is described in paragraph 4.7.2.7.5.

4.7.2.4.4 Archive Products Data Flow. When an archive III device is installed there is a color coded bar between the RPG icon and the Archive Products icon representing the connection between the archive III device and the RPG processor. The bar is white when the device is idle. When the device is active, a small black box moves repeatedly within a green bar. The small black box represents the product data moving over the connection.

4.7.2.5 Wideband Area. In this area of the Main Menu there is information displayed about the status of the wideband link, the availability of the three base data moments (Reflectivity, Velocity, and Spectrum Width), RDA Control, and links to the Wideband Status/Control window and the MLOS Status window.

4.7.2.5.1 Wideband Link Data Flow. Located between the RDA and RPG icons on the Main Menu is a graphic of three bars representing the wideband connection. Each bar represents a base data moment. The top bar, labeled "R", represents Reflectivity. The middle bar, labeled "V", represents Velocity. The bottom bar, labeled "W", represents Spectrum Width. The bars are color coded and can be displayed in white, red, or green. A white display indicates that the wideband line is connected, but there is no base data flowing. A bar displayed in red indicates that the moment has been disabled from the Define Moments window, or that the entire wideband link has failed. See Figure 4–59. A green display indicates that the wideband line is connected and there is base data flowing. When no bars are displayed, the wideband line is not connected. When the bars are displayed in green, there is a small black box that moves within the bar from the left to the right (from the RDA icon to the RPG icon) indicating that moments of base data are enabled and flowing.

4.7.2.5.2 Wideband Status. Located just below the wideband graphic is a text message indicating the status of the wideband link. The possible messages are as follows:

- Connected
- Disconnect HCI
- Disconnect SHUTDOWN
- Connect Pending
- Disconnect Pending
- Failure

4.7.2.5.3 RDA/RPG Interface Control/Status. Clicking on the wideband graphic opens up the RDA/RPG Interface Control/Status window. See Figure 4–67. At the top of this window the same current state of the wideband link as seen on the Main Menu is highlighted and color coded. The middle portion of this window, called Wideband Control, is used to command the wideband link to **Connect** or **Disconnect**. To do so, simply click on the desired selection and then click on **Continue** in the warning_popup window. The current state of the link, either Connected or Disconnected, is greyed–out or desensitized within the Wideband Control area, preventing the user from selecting the state that the link is already in. The bottom portion of the window entitled Wideband Interface Parameters contains three editable values entitled Retries, Timeouts, and Loopback Rate (sec). Retries is defined as the number of attempts to reconnect the line before it is marked disconnected on the status display. The range of values that can be entered in the Retries field is 0 – 5. Timeouts is defined as the number of seconds elapsed when the response to a communications command is considered overdue. The range of values that can be entered in the Timeouts field is 1 – 30. Loopback Rate (sec) is defined as the number of seconds between the automatic loopback tests between the RDA and RPG. The range of values that can be entered in the Loopback Rate (sec) field is 60 – 300. The loopback tests can also be completely turned off by clicking on the **Disable** box just to the right of the Loopback Rate (sec) field. The loopback tests is disabled when a check mark appears in the box. When this window opens, all of these fields display the currently selected value. Once the user changes any of these values, the **Save** and **Undo** buttons at the top of the window become active and display normally rather than greyed–out. If the user makes any changes to these parameters and then attempts to **Close** the RDA/RPG Interface

Control/Status window before clicking on either the **Save** and **Undo** buttons a warning_popup window appears asking the question "Do you want to save your changes?", with a **Yes** and a **No** button to chose from. Clicking on **No** closes the window without saving any changes, and clicking on **Yes** closes the window and saves all of the changes. Clicking on **Close** before making any changes simply closes the window.

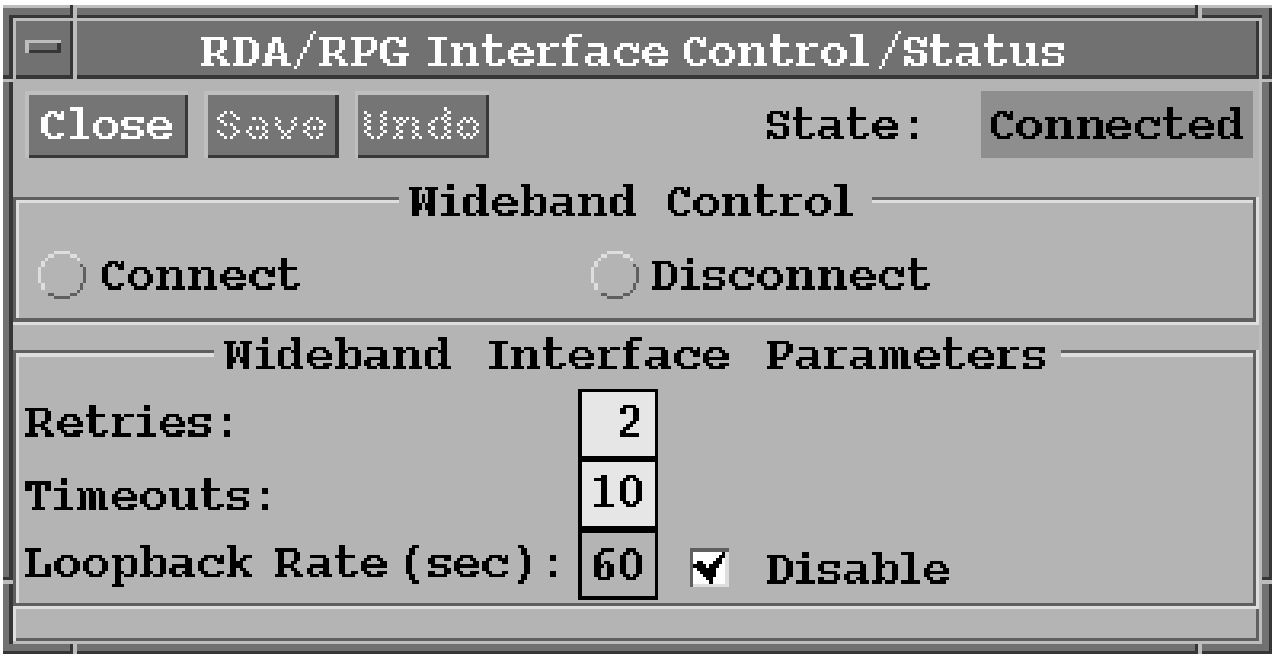

Figure 4–67. RDA/RPG Interface Control/Status Window

4.7.2.5.4 System Control Indicator. Just above the wideband graphic is a text message on a line indicating which system currently has control of the RDA. The possible messages are as follows:

- RDA
- RPG
- EITHER

4.7.2.5.5 MLOS Button. For sites that have a Microwave Line–of–Site (MLOS) wideband link, an additional button, labeled MLOS, will be present on RPG HCI Main Menu just to the right of the Tower. Clicking on the **MLOS** button opens up the MLOS Status window. See Figure 4–68. This window is used to display alarm and status information about the MLOS wideband link to aide in troubleshooting.

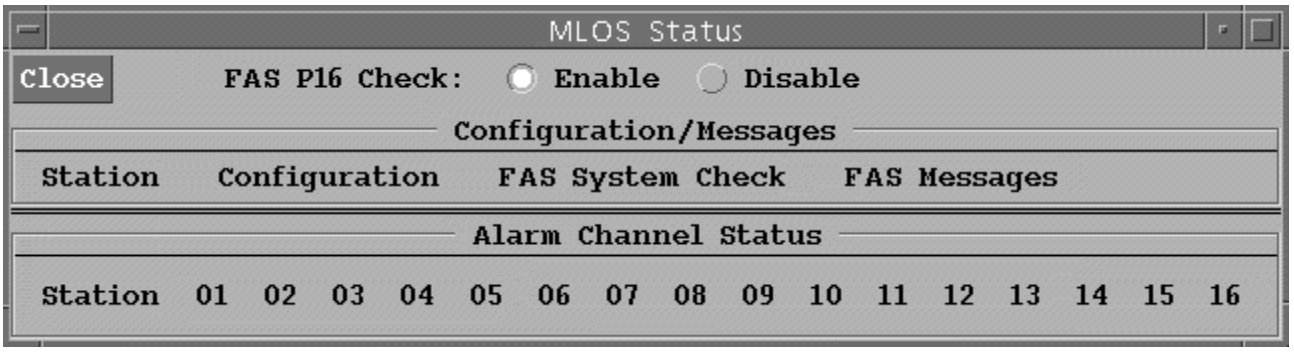

Figure 4–68. MLOS Status Window

The **Enable** and **Disable** buttons at the top of the window for FAS P16 Check are not implemented at this time. The Configuration/Messages area in the middle of the window contains information about each station. If a message is an alarm, it has a red background. If a message is about functional items, like a reset, it has a green background. All other messages have a tan background.

The Alarm Channel Status area at the bottom of the window list the 16 most recent alarms. Color coded blocks under the alarm numbers are either displayed in green to indicate a cleared alarm, or in red containing the letter A to indicate an active alarm. Clicking on the **Close** button closes the window.

4.7.2.6 Users Area. In the Users Area of the Main Menu information is available regarding communication line configuration and status as well as user information.

4.7.2.6.1 Users Icon. Directly to the right of the RPG icon is the Users icon that contains buttons labeled **Comms**, **Products**, and **Status**.

4.7.2.6.2 Comms. Clicking on the **Comms** button within the Users icon opens the Product Distribution Comms Status window. See Figure 4–69. This window contains information about each narrowband line. The left side of the window is entitled Product Distribution Lines and is organized into the following columns:

- Line — RPG Line Number
- Type — DEDIC or DIALIN
- Enabled — yes or no
- Proto — X25 or TCP
- ID — When connected, the ID number of the User connected to that line.
- User Name — When connected, the name given to the User connected to that line, if that user has been assigned a name by ROC
- Class — The Class of User (N/A, RPGOP_50, RPGOP_90, 1, 2, or 4) that uses that line.
- Status — CONNECT, DISCON, CON PEND, or FAILED

- Util % of line capacity estimated to be in use.
- Rate The estimated achieved data transmission rate of the serial narrowband line. This is displayed as a % of the nominal data transmission rate specified by the software and serves as an estimate of line quality.

Just below this portion of the window the user can select how to sort this data. The current selection is indicated by having its button filled in. The selections are to sort by **Line** number, line **Type**, or line **Status**. Clicking on **Line** sorts the information by line number in descending order with line 1 being at the top. Clicking on **Type** sorts the information by line type with all of the dedicated lines being listed before the dial–in lines. Clicking on **Status** sorts the information by line status with the lines that have a status of CONNECT being listed first, followed by those lines that have a status of CON PEND, and then those lines that have a status of DISCON and FAILED.

Click the "Next" arrow or the "Prev" arrow as necessary to alternately view Lines 1 through 24 or Lines 25 through 40.

Near the bottom of the window on the left hand side is the Line Control area. The buttons available to the user in this area include **Reset**, **Disconnect**, **Connect**, and **Deselect**. To issue any of these commands to a specific line number, the user must first highlight, or select, a line by clicking anywhere on it. Once a line is highlighted, clicking on any of the buttons in the Line Control area and answering **Yes** to the warning_popup window issues the command to the selected line.

At the bottom of the Product Distribution Comms Status window is a password protected area entitled General Parameters that contains user selected values for the following four fields:

- Retries
- Timeout
- Alarm (%)
- Warning (%)

Retries are defined as the number of attempts to reconnect a line before it is marked disconnected on the status display. Any value between 1 – 999 can be entered in the Retries field. Timeouts are defined as the number of seconds elapsed when the response to a communications command is considered overdue. Any value between 60 – 999 can be entered in the Timeouts field. The Alarm (%) and Warning (%) values are Load Shedding adaptable parameters that are also changeable on the Distribution line in the Load Shed Categories window. See Figure 4–72. If the Util column in the Product Distribution Lines area of the window has a value greater than either of these values, then a warning message or alarm is generated accordingly. Changing any of these values causes the **Save** button at the top of the window to become active and display normally rather than greyed–out. Clicking on the **Save** button at that point saves all of the changes that have been made in the Product Distribution Comms Status window. Also, if the user tries to **Close** the window before saving the changes, a warning_popup window appears asking the question "Do you want to save your changes?", with a **Yes** and a **No** button to chose from. Clicking on **No** closes the window without saving any changes, and clicking on **Yes** closes the window and saves all of the changes. Clicking on **Close** before making any changes simply closes the window.

In the upper right hand corner of the window is a button containing a graphic of a black lock in the locked position indicating that this window contains password protected adaptable parameters. Clicking on the lock button opens up the Password window. See Figure 4–73. In the middle of the Password window is the LOCA area that contains a selection of the level of users that are permitted to edit the associated window. The possible selections are as follows:

- **Agency** (NWS, DoD, FAA)
- **ROC**
- **URC**

Clicking on either of these selections does two things. First, the selection becomes active as indicated by the button filling in and the selection becoming outlined. Second, it changes the display of the adaptable parameters data in the Product Distribution Comms Status window. All of the numbers that change from black to white are the changeable parameters that the selected Authority (LOCA) can obtain permission to change. To actually obtain permission to make changes in those areas, the user must click on the Password field and then enter the correct, case sensitive, password for that Authority and press **<CR>**. If an incorrect password is entered, a warning_popup window appears that informs the user that an invalid password has been entered. Once the **Continue** button in the warning_popup window has been clicked on, the user is then returned to the Password window where the Password field is highlighted and ready for input. When the correct password is entered, the Password window closes and the user is returned to the Product Distribution Comms Status window where the adaptable parameters that can be changed are now highlighted in light blue. Also, the lock button now contains a graphic of a red lock in the unlocked position along with the Authority that unlocked it. To make a change, simply click on the desired field, edit it normally (e.g., highlight and type over the present value), and press **<CR>**. If the value that was entered is not valid, a warning_popup window restates the invalid value that was entered and reminds the user of the valid entry range. From there, simply click on the **Continue** button within the warning_popup window and the user is returned to the Product Distribution Comms Status window with the same field outlined that caused the invalid entry error. Clicking on the lock button again returns the window to its normal display and disables the ability to make changes. The lock graphic also changes back to being displayed in black and in the locked position. Once a valid entry has been made, the **Save** button becomes active and displays normally. Any changes that have been made must be saved before they actually take effect. Clicking on the **Close** button of the Product Distribution Comms Status window closes that window. If the user attempts to close the window before saving any changes that were made, another warning_popup window appears asking the user "Do you want to save the changes that you made...?" and gives the user a **Yes** and a **No** button to choose from. Clicking on the **No** button closes the window without saving any changes, and clicking on the **Yes** button saves the changes and closes the window.

Near the upper right hand side of the Product Distribution Comms Status window is an area entitled Line Management. This area contains the following lines:

- Line # — RPG Line Number
- Type — **Dedicated** or **Dial–in**
- Port Pswd — The password that a User must match before it is allowed to connect. This line is encrypted when the window is locked.

- Baud Rate — The data rate used for utilization and rate estimations.
- Comm Mgr # — The software comms manager number associated with that line.
- PServer # — The software p_server number associated with that line.
- Time Limit — The maximum time that the line is allowed to stay connected before it automatically disconnects for dial users.
- Comms Option — **Yes** or **No**. Applies to X.25 users only and determines whether packet size is 512 octets for Yes or 128 octets for No.

The Line/User Info area is right below the Line Management area and contains the following lines:

- User ID — The ID number of the User connected to that line.
- User Name — The name of the User connected to that line.
- Class — The Class of User connected to that line. The available selections are **N/A**, **RPGOP_50**, **RPGOP_90**, **1**, or **2**.
- Method[1] — The following distribution methods are available for Class 4:
  SSET [1] – A single set of products.
  RSET [2] – A single set of products repeatedly transmitted.
  1TIM [3] – A one time request (OTR) for a product.
  COMB [4] – A combination of both RSET [2] and 1TIM [3].

These two areas fill in with the associated information for any line that is double clicked on in the Product Distribution Lines area of the window. The lines that are greyed out when the window is locked are password protected adaptable parameters. These same lines are highlighted when the window is unlocked and are editable by the LOCA who entered the password.

Near the lower right hand side of the Product Distribution Comms Status window is an area entitled Dial–in Users. This area is used by the operator to add dial–in Users, delete dial–in Users, and edit current dial–in Users' adaptable parameters. Details of this area of the Product Distribution Comms Status window and how to use it can be found in the NWS EHB 6–526 RPG Operations Instructions Manual.

– – – – –

1. At this time, there is only one RPG that supports a Class 4 user.

Product Distribution Comms Status

Close Save Undo Baseline: Restore Update

Product Distribution Lines

Line	Type	Enabled	Proto	ID	User Name	Class	Status	Util	Rate
1	DIALIN	yes	X25			2	DISCON	0%	0%
2	DIALIN	yes	X25			2	DISCON	0%	0%
3	DIALIN	yes	X25			2	DISCON	0%	0%
4	DIALIN	yes	X25			2	DISCON	0%	0%
5	DIALIN	yes	X25			2	DISCON	0%	0%
6	DIALIN	yes	X25			2	DISCON	0%	0%
7	DIALIN	yes	X25			2	DISCON	0%	0%
8	DIALIN	yes	X25			2	DISCON	0%	0%
9	DEDIC	yes	X25			RPGOP_50	DISCON	0%	0%
10	DEDIC	yes	X25			1	DISCON	0%	0%
11	DEDIC	yes	X25			1	DISCON	0%	0%
12	DEDIC	yes	X25			1	DISCON	0%	0%
13	DEDIC	yes	X25			1	DISCON	0%	0%
14	DEDIC	yes	X25			1	DISCON	0%	0%
15	DEDIC	yes	X25			1	DISCON	0%	0%
16	DEDIC	yes	X25			1	DISCON	0%	0%
17	DEDIC	yes	X25			1	DISCON	0%	0%
18	DEDIC	yes	X25			1	DISCON	0%	0%
19	DEDIC	yes	X25			1	DISCON	0%	0%
20	DEDIC	yes	X25			1	DISCON	0%	0%
21	DEDIC	yes	X25			1	DISCON	0%	0%
22	DEDIC	yes	X25			1	DISCON	0%	0%
23	DEDIC	yes	X25			1	DISCON	0%	0%
24	DEDIC	yes	X25			1	DISCON	0%	0%

Prev --- Next Sorted By: Line Type Status

Line Control

Reset Disconnect Connect Deselect

General Parameters

Retries 2 Timeout 120 Alarm (%) 100 Warning (%) 95

Line Management

Line # 1 [X25] Comm Mgr # 1

Type Dial-in PServer # 1

Port Pswd **** Time Limit 60

Baud Rate 14400 Comms Option No

Line/User Info

User ID Class 2

User Name Method N/A

Dial-in Users

Prev [Users 1 to 20 of 806] Next

User ID/Name	Pswd	Ovr	T Limit	Class	Method
1 [HOTLINE]	****		60	2	N/A
2 [ADS2]	****		60	2	N/A
3 [ADS3]	****		60	2	N/A
4 [ADS4]	****		60	2	N/A
5 [ADS5]	****		60	2	N/A
6 [ADS6]	****		60	2	N/A
7 [ADS7]	****		60	2	N/A
8 [ADS8]	****		60	2	N/A
9 [ADS9]	****		60	2	N/A
10 [ADS10]	****		60	2	N/A
11 [ADS11]	****		60	2	N/A

Add Dial-in User Delete Dial-in User

Figure 4–69. Product Distribution Communications Status Window (Sheet 1 of 2)

Product Distribution Comms Status – (FAA:1)

Close Save Undo Baseline: Restore Update

Product Distribution Lines

Line	Type	Enabled	Proto	ID	User Name	Class	Status	Delay	Rate
25	DEDIC	yes	TCP			RPGOP_90	CON PEND	0%	-
26	WAN	yes	TCP			2	CON PEND	0%	-
27	WAN	yes	TCP			2	CON PEND	0%	-
28	WAN	yes	TCP			2	CON PEND	0%	-
29	WAN	yes	TCP			2	CON PEND	0%	-
30	WAN	yes	TCP			2	CON PEND	0%	-
31	WAN	yes	TCP			2	CON PEND	0%	-
32	WAN	yes	TCP			2	CON PEND	0%	-
33	DEDIC	yes	TCP			RPGOP_50	CON PEND	0%	-
34	DEDIC	yes	TCP			RPGOP_50	CON PEND	0%	-
35	DEDIC	yes	TCP			RPGOP_50	CON PEND	0%	-
36	DEDIC	yes	TCP			RPGOP_50	CON PEND	0%	-
37	DEDIC	yes	TCP			RPGOP_50	CON PEND	0%	-
38	DIALIN	yes	TCP			2	CON PEND	0%	-
39	DIALIN	yes	TCP			2	CON PEND	0%	-
40	DIALIN	yes	TCP			2	CON PEND	0%	-
41	WAN	yes	TCP			2	CON PEND	0%	-
42	WAN	yes	TCP			2	CON PEND	0%	-

Prev --- Next Sorted By: Line Type Status

Line Control

Reset Disconnect Connect Deselect

General Parameters

Retries 2 Timeout 120 Alarm (%) 100 Warning (%) 95

Line Management

Line # 1 [X25] Comm Mgr # 1

Type Dial-in PServer # 1

Port Pswd **** Time Limit 60

Baud Rate 14400 Comms Option No

Line/User Info

User ID Class

User Name Method N/A

Dial-in Users

Prev [Users 1 to 20 of 891] Next

User ID/Name	Pswd	Ovr	T Limit	Class	Method
1 [HOTLINE]	****		60	2	N/A
2 [ADS2]	****		60	2	N/A
3 [ADS3]	****		60	2	N/A
4 [ADS4]	****		60	2	N/A
5 [ADS5]	****		60	2	N/A
6 [ADS6]	****		60	2	N/A
7 [ADS7]	****		60	2	N/A
8 [ADS8]	****		60	2	N/A
9 [ADS9]	****		60	2	N/A
10 [ADS10]	****		60	2	N/A
11 [ADS11]	****		60	2	N/A

Add Dial-in User Delete Dial-in User

Figure 4–69. Product Distribution Communications Status Window (Sheet 2 of 2)

4.7.2.6.3 Products. Clicking on the **Products** button within the Users icon opens the RPG Product Distribution Control window. See Figure 4–70. This window is used by the operator to modify the attributes and filter the product list for each class of user. Detailed instructions of this window and how to use it can be found in the NWS EHB 6–526 RPG Operations Instructions Manual.

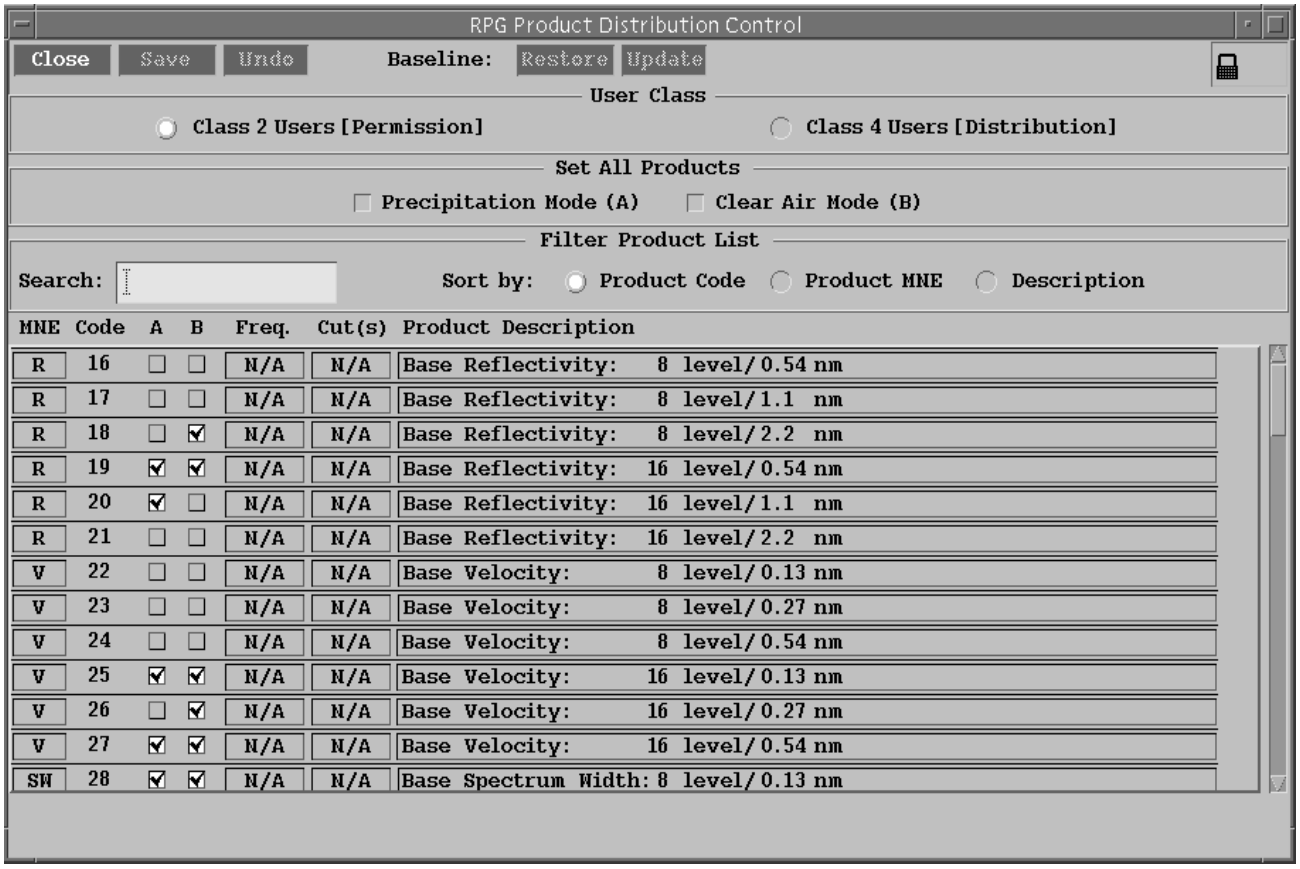

Figure 4–70. RPG Product Distribution Control Window

4.7.2.6.4 Status. Clicking on the **Status** button within Users icon opens the PUP/RPGOP Status window. See Figure 4–71. This window contains Line ID, State, and Error Status information about each narrowband line. Clicking on a Line ID box sends a request for new error status information of the corresponding narrowband line. If new error status information is available, it will be displayed in the Error Status column of the corresponding narrowband line. Clicking on an Error Status box displays the errors for that line in the Active Errors area of the window.

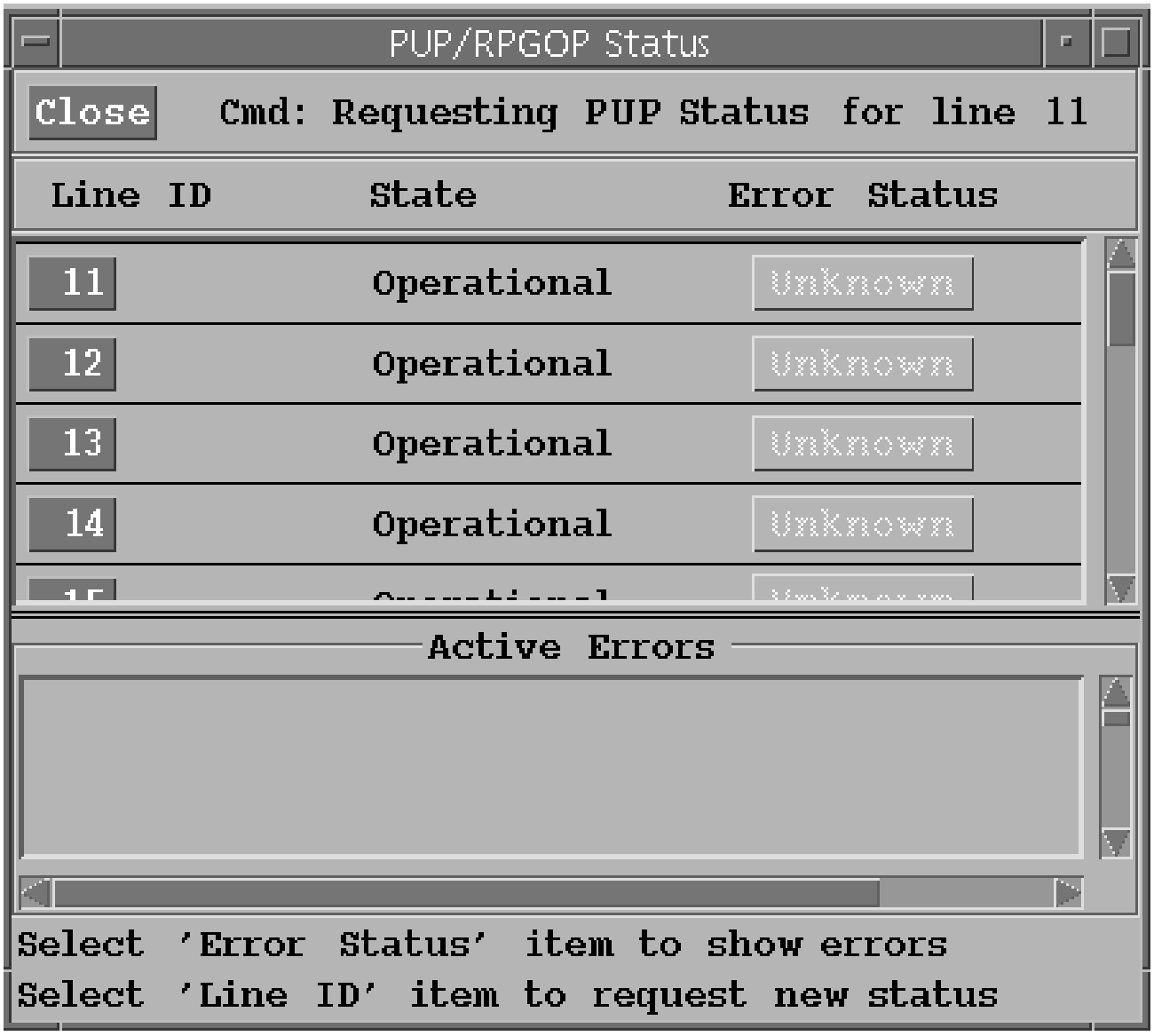

Figure 4–71. PUP/RPGOP Status Window

4.7.2.6.5 Narrowband Data Flow. In between the RPG and Users icons on the Main Menu is a graphic of a green bar that represents the narrowband connections. Additionally, a small black box moves repeatedly within the bar from left to right representing the flow of product data. Clicking on this graphic opens the Product Distribution Comms Status window described in paragraph 4.7.2.6.2.

4.7.2.7 Status Areas. The Main Menu has two status areas, one at the bottom with three lines (Feedback, Status, and Alarms), and one near the lower right hand corner beneath the Users icon. This area displays information pertaining to the Precipitation Category, VAD Update, Auto PRF, Calibration, Load Shedding, Audio Alarms, and RDA Messages, plus Adapt Times on FAA systems.

4.7.2.7.1 Precip Cat. This line displays either the word NONE in green, the word LIGHT in yellow, or the word SIG in red. Clicking on any of the words opens the Precipitation Status window.

4.7.2.7.2 VAD Update. This line displays either the word ON in green or the word OFF in red. The user initiates a change of this selection by clicking on either word.

4.7.2.7.3 Auto PRF.. This line displays either the word ON in green or the word OFF in red. The user initiates a change of this selection by clicking on either word.

4.7.2.7.4 Calib. This line displays a highlighted calibration value in brackets, and either the word AUTO in green, or the word MANUAL in red. When the wideband line is connected and the RPG is in Control of the RDA, a change can be initiated between Automatic and Manual Calibration by clicking on either word. When AUTO calibration is in use, the system's calibration number that is automatically calculated by the RDA is the calibration value displayed on this line. When MANUAL calibration is in use, the calibration value that was selected in the Reflectivity Calibration window is the value displayed on this line. Clicking on the calibration value initiates a change of the Manual Calibration value. See Figure 4–58, and paragraph 4.7.2.3.1.1.1 for details of how to select and apply a new Manual Calibration value using the Reflectivity Calibration window.

4.7.2.7.5 Load Shed. This line displays either the word Normal in green, Warning in yellow, or Alarm in red. Clicking on any of the words opens the Load Shed Categories window, Figure 4–72. This window displays the color coded Current values for all load shed categories listed below and the thresholds for their Warning and Alarm levels. The Current value is displayed in red if it is at the Alarm level, yellow if it is at the Warning level, or green if it is below the Warning level.

- CPU
- Distribution
- Product Storage
- RDA Radial
- RPG Radial
- Archive III

In the upper right hand corner of the Load Shed Categories window there is a button with a graphic of a black lock in the locked position. This button indicates the presence of protected adaptable parameters within this window. Clicking on the lock button opens the Password window, see Figure 4–73, where the LOCA area contains a selection of the level of users that are permitted to edit the associated window. The possible selections are as follows:

- **Agency** (NWS, DoD, FAA)
- **ROC**
- **URC**

Clicking on a LOCA outlines it, fills in its button, and highlights the values in the Load Shed Categories window that the selected LOCA can gain permission to change. To change those values, the user must enter the correct, case sensitive, password for that LOCA in the Password field and press **<CR>**. If an incorrect password is entered, a warning_popup window appears stating such. Click on **Continue** in the warning_popup to return to the Password window. When the correct password is entered, the Password window closes and the changeable values are now highlighted in light blue. The lock button now contains a graphic of a red lock that is unlocked and the LOCA that unlocked it. Clicking on the lock button again removes the ability to make changes, changes the lock button back to a black lock that is locked, and returns the window to its previous display.

The **Save** and **Undo** buttons don't sensitize until an edit is made in the window. The **Restore** and **Update** buttons sensitivity depends on the LOCA that unlocked the window, and if any edits are pending. If the Agency LOCA unlocked the window, the **Restore** and **Update** buttons will never be sensitized. If the ROC or URC LOCA unlocked the window, the **Restore** and **Update** buttons are desensitized when the **Save** and **Undo** buttons are sensitized (edits not saved). The **Restore** and **Update** buttons are sensitized when the **Save** and **Undo** buttons are desensitized (edits saved).

To change a Warning or Alarm threshold, click on the desired value, edit it normally, (e.g., highlight and type over the present value), and press **<CR>**. If an invalid value is entered, a warning_popup window appears that displays the invalid value and the valid entry range. Click on the **Continue** button in the warning_popup window to return to the Load Shed Categories window where the value that caused the invalid entry error is outlined. Once a valid entry is made, the **Save** and **Undo** buttons become sensitized. Changes must be saved before they take effect. Clicking on the **Close** button closes the Load Shed Categories window. If the user attempts to **Close** the window before clicking on either the **Save** or **Undo** buttons, a warning_popup window appears asking the user "Do you want to save the changes that you made?" and provides a **Yes** and a **No** button to chose from, one of which must be selected. Clicking on the **No** button closes the window without saving the changes, and clicking on the **Yes** button saves the changes and closes the window.

Clicking on the **Update** button, and **Continue** in the subsequent warning_popup, updates the baseline load shed adaptation data values with any new values that were entered and saved in the Load Shed Categories window. Clicking on the **Restore** button, and **Continue** in the subsequent warning_popup, restores the load shed adaptation data to the baseline values that were last updated.

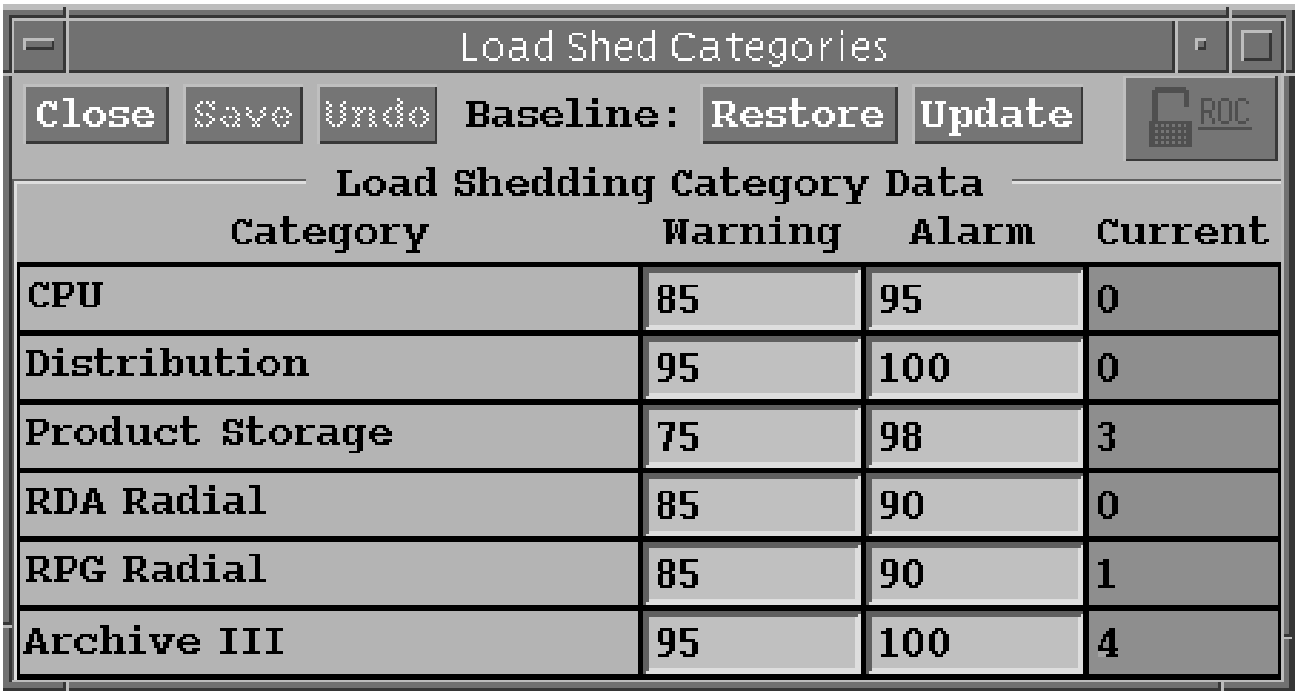

Figure 4–72. Load Shed Categories Window

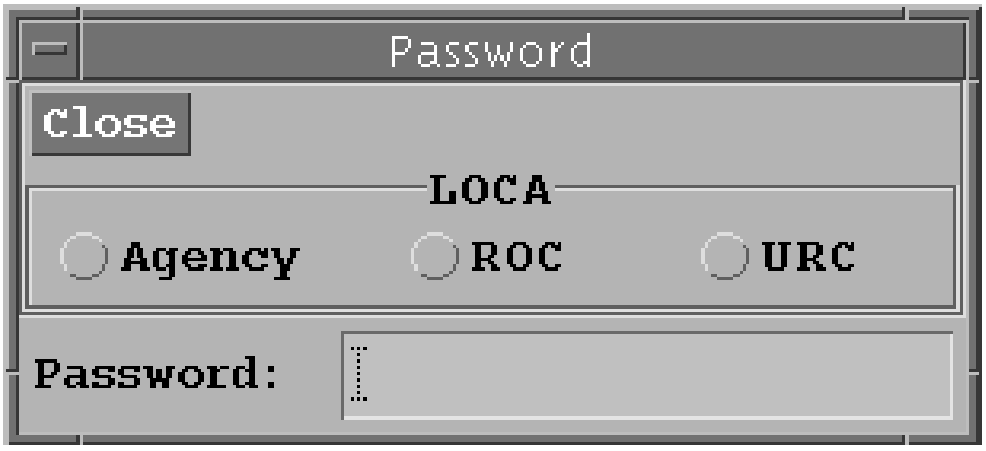

Figure 4–73. Password Window

4.7.2.7.6 Audio Alarms. This line displays either the word ENABLED in green or the word DISABLED in red. The user initiates a change of this selection by clicking on either word.

4.7.2.7.7 RDA Messages. This line displays either the word ENABLED in green or the word DISABLED in red. The user initiates a change of this selection by clicking on either word.

4.7.2.7.8 Adapt Times. This line only appears when the RPG is configured as an FAA Redundant system, and displays either the word MATCH in green or the word MISMATCH in red. These words are used to indicate whether the adaptation data in the Channel 1 RPG is identical to the adaptation data in the Channel 2 RPG. If there is a mismatch, the user initiates an update of the older data to match the newer data simply by clicking on the word **MISMATCH**.

4.7.3 MSCF WINDOWS.

The MSCF windows are a set of GUI windows that are used for the monitoring and management of SNMP data. Simple Network Management Protocol is a widely used software monitoring package on TCP/IP networks. This monitoring is useful for fault isolation. It uses standard communications protocol over a local or distant network connection. It is configured with multiple agents that report information to a manager. In the case of the RPG, the SNMP manager is a subset of the MSCF Applications Software that typically runs on the MSCF processor, but can also run on the RPG processor. SNMP agents on RPG devices respond to either requests from the SNMP manger, or to pre–set traps that automatically notify the SNMP manager when a certain condition occurs/exists. Standard traps include link up and link down traps for communications interfaces. All of the communications and power management devices on the RPG implement private SNMP agents with the exception of the RDA/RPG Gateway and the X.25 Serial Data Communicationand the X.25 Serial Data Communication ServerServers, which don't have any type of SNMP agent. SNMP also provides a management layer that is used in the RPG Power Administrator (APC MasterSwitch) for power control. This SNMP data is displayed in the Master System Control Functions window, also called the MSCF Display, the Comms Status window, the Power Control window, and the BDDS HCI window. Descriptions of how to access and use these windows are contained in the following paragraphs.

4.7.3.1 MSCF Display. Entering **mscf&<CR>** on the command line of a Terminal window, at the RPG or MSCF workstation, opens the Master System Control Functions window while keeping the Terminal window available for further use. This window is referred to as the MSCF Display. See Figure 4–74. Other MSCF windows can be accessed from this window by clicking on the associated buttons near the top of the window. Buttons are available for accessing the **Comms Status**, **Power Control**, **RPG HCI**, and **RDA HCI** windows. If the RPG is configured with the BDDS option, a **BDDS HCI** button will be available. Also, if the RPG is configured as an FAA redundant system, then a Channels area will be displayed which contains a **1** and a **2** button for selecting which Channel to view. The following paragraphs described each of these windows in detail. Clicking on the **Close** button closes the Master System Control Functions window. In the center of the window is a display area for color coded Hardware Status/Warning messages from SNMP traps. Messages appearing in green indicate a link up condition, and messages appearing in red indicate a link down condition. This area is also provided with horizontal and vertical scroll bars when necessary in order to view the entire contents. The messages are time–stamped and appear in the order that they were received, with the newer messages appearing at the bottom. Below that, near the bottom of the window, the following four different methods of filtering through the Hardware Status/Warning messages are provided:

- Show – Clicking on the down arrow opens a pull down menu with the following message display options: **All Messages**, **Critical**, **APC**, and **CISCO**. Clicking on any of these refreshes the display with the appropriate changes, closes the pull down menu, and places the selection title in the Show block.

- Search – Click on the light blue area to activate it and place the cursor inside it and then enter the desired, case sensitive, character string (including spaces) for which to search. Pressing **<CR>** causes only those messages that contain the Search character string to display. If no messages are found that contain the string, the

display area goes blank. To return to the unfiltered display, delete all characters (including spaces) in the Search block and press **<CR>**.

- Lines – This entry defines the number of lines that are included in the display area. A line is defined as any message that begins with a date and time stamp all the way to the left side of the window and includes all of the text between that date and time stamp and the next one. So, one line of status information may actually be several lines worth of text on the terminal display. The value is changeable, with the allowable range being from 0 – 1200, and a default value of 200 lines. Only the newest lines are displayed, so if the display area already contains the number of lines entered here and another line comes in, the oldest line in the display will be discarded and the new line will be displayed at the bottom.

- Find – Click on the light blue area to activate it and place the cursor inside it and then enter the desired, case sensitive, character string (including spaces) for which to search. Pressing **<CR>** causes only those messages containing the Find character string to display, and the oldest line containing the string to be highlighted. Subsequent **<CR>**'s cause the next newer line containing the string to be highlighted. After the newest line containing the string is highlighted, pressing **<CR>** again loops back to highlight the oldest line again. The vertical scroll bar, if present, can also be used to scroll through the display area and find the highlighted messages. If no messages are found that contain the string, the display area does not change, and no feedback is provided. To return to the unfiltered display, delete all characters (including spaces) in the Find and Filter blocks and press **<CR>**.

At the bottom of the window is the Network Connectivity area where color coded boxes represent devices on all RPG configurations as described below. Color coding gives a quick overall status of the network devices at a glance. Devices displayed in green are currently connected, and those in red are not. This area only displays status information, and no commands are initiated by clicking on any of the device boxes.

- NWS/DoD displays at the RPG Maintenance Position Terminal have boxes labeled: bdds, lan, mscf, network, and rtr.

- NWS/DoD displays at the MSCF have boxes labeled: bdds, lan, network, rpg, and rtr.

- FAA displays at the RPG Maintenance Position Terminal #1 have boxes labeled: lan, lan2, mscf, network, rpg2, rtr, and rtr2.

- FAA displays at the RPG Maintenance Position Terminal #2 have boxes labeled: lan, lan2, mscf, network, rpg1, rtr, and rtr2.

- FAA displays at the MSCF have boxes labeled: lan, lan2, network, rpg, rpg2, rtr, and rtr2.

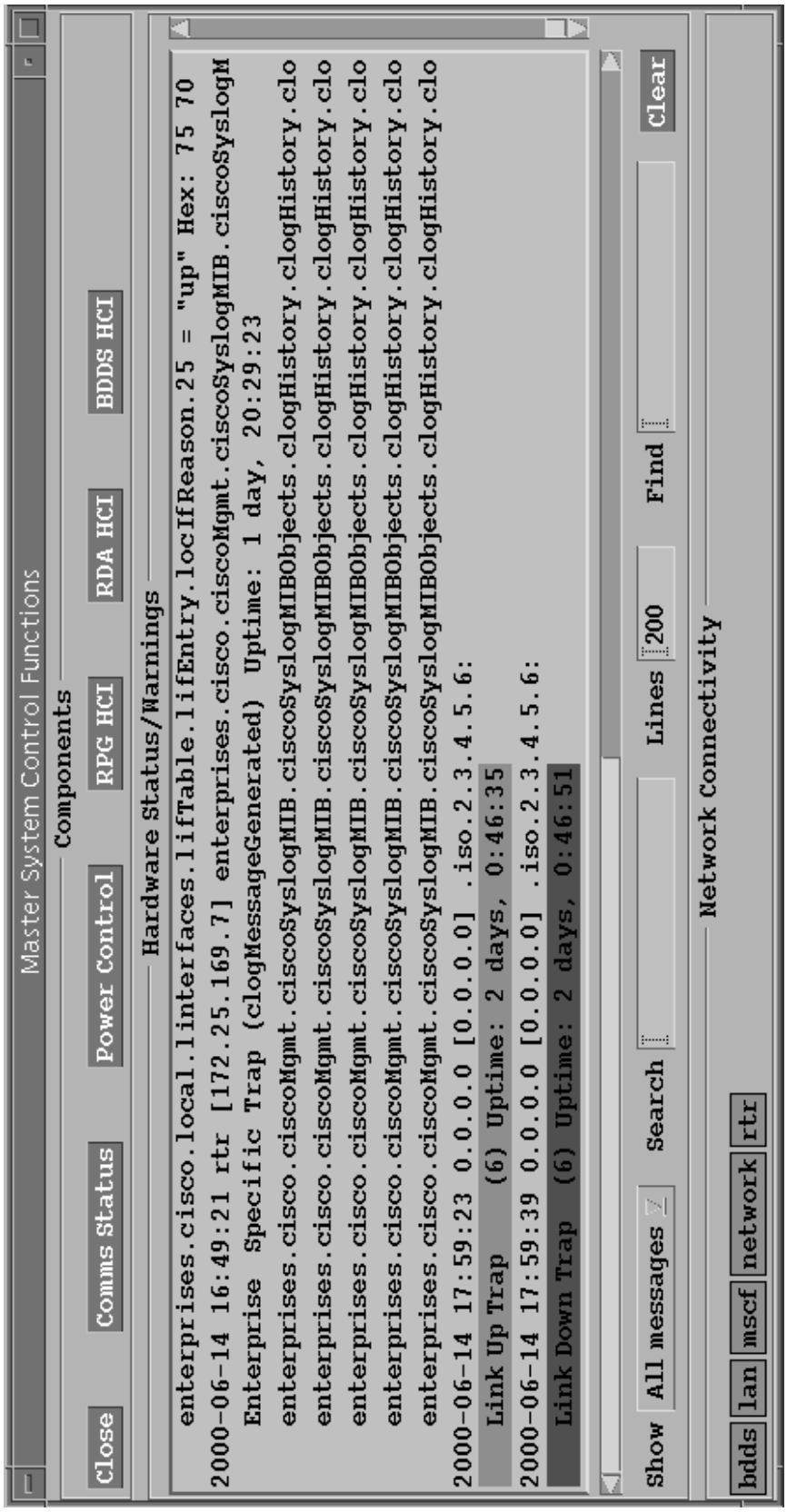

Figure 4–74. MSCF Display

Close Device CISCO Switch Update

CISCO Switch

Device Name	OpStatus	Description	Type	Collisions	IReset
	up(1)	VLAN1	ethernetCsmacd(6)	85136527	0
RPG	up(1)	FastEthernet0/1	ethernetCsmacd(6)	0	1
	down(2)	FastEthernet0/2	ethernetCsmacd(6)	0	1
Router	up(1)	FastEthernet0/3	ethernetCsmacd(6)	0	1
	down(2)	FastEthernet0/4	ethernetCsmacd(6)	0	1
	down(2)	FastEthernet0/5	ethernetCsmacd(6)	0	1
RDA/RPG Gateway	up(1)	FastEthernet0/6	ethernetCsmacd(6)	1267	1
Interprocessor Link	up(1)	FastEthernet0/7	ethernetCsmacd(6)	0	1
UPS	up(1)	FastEthernet0/8	ethernetCsmacd(6)	0	1
Masterswitch	up(1)	FastEthernet0/9	ethernetCsmacd(6)	9	1
Baytech A	up(1)	FastEthernet0/10	ethernetCsmacd(6)	0	1
Baytech B	up(1)	FastEthernet0/11	ethernetCsmacd(6)	0	1
	down(2)	FastEthernet0/12	ethernetCsmacd(6)	0	1
	down(2)	FastEthernet0/13	ethernetCsmacd(6)	0	1
	down(2)	FastEthernet0/14	ethernetCsmacd(6)	0	1
	down(2)	FastEthernet0/15	ethernetCsmacd(6)	0	1
	down(2)	FastEthernet0/16	ethernetCsmacd(6)	0	1
Comm Server A	up(1)	FastEthernet0/17	ethernetCsmacd(6)	0	1
Comm Server B	up(1)	FastEthernet0/18	ethernetCsmacd(6)	0	1
Comm Server C	up(1)	FastEthernet0/19	ethernetCsmacd(6)	0	1
	down(2)	FastEthernet0/20	ethernetCsmacd(6)	0	1
	down(2)	FastEthernet0/21	ethernetCsmacd(6)	0	1
	down(2)	FastEthernet0/22	ethernetCsmacd(6)	0	1
	down(2)	FastEthernet0/23	ethernetCsmacd(6)	0	1
Test_Port	down(2)	FastEthernet0/24	ethernetCsmacd(6)	0	1

Figure 4–75. MSCF Communications Status Window (Sheet 1 of 2)

Close Device CISCO Router Update

CISCO Router

Device Name	OpStatus	Description	Type	Collisions	IReset
bdds_router	down(2)	Serial0/0	propPointToPointSerial(22)	0	51383
lan_switch	up(1)	FastEthernet0/0	ethernetCsmacd(6)	0	0
redundant_rtr	up(1)	FastEthernet0/1	ethernetCsmacd(6)	0	0
roc_lan	up(1)	Ethernet1/0	ethernetCsmacd(6)	1106	0
roc_lan_Xrunner_only	down(2)	Ethernet1/1	ethernetCsmacd(6)	0	0
	up(1)	Null0	other(1)	0	0
distant_mscfdormant(5		Serial2/0	ppp(23)	0	136
	up(1)	BVI1	ethernetCsmacd(6)	0	0
Line 33 DEDIC	down(2)	Serial2/1	ppp(23)	0	3
Line 34 DEDIC	down(2)	Serial2/2	ppp(23)	0	20
Line 35 DEDIC	down(2)	Serial2/3	ppp(23)	0	445
Line 36 DEDIC	down(2)	Serial2/4	ppp(23)	0	11
Line 38 DIALIN	down(2)	Serial2/5	ppp(23)	0	6
Line 39 DIALIN	down(2)	Serial2/6	ppp(23)	0	15
Line 40 DIALIN	down(2)	Serial2/7	ppp(23)	0	17
	up(1)	BVI2	ethernetCsmacd(6)	0	0

Figure 4–75. MSCF Communications Status Window (Sheet 2 of 2)

4.7.3.1.1 MSCF FAA Channels Area. The Channels area is only displayed when the RPG is configured as an FAA Redundant system. This area is in the upper right–hand corner of the MSCF Display window and contains two buttons labeled **1** and **2**. These two buttons act as a toggle switch, and only one at a time can be selected. Clicking on the Channel **1** button highlights that button and causes the data in the MSCF Display window to pertain to Channel 1 (Not to be confused with the Controlling Channel). To display and interact with Channel 2, click on the Channel **2** button to highlight it. So, for example, when the Channel **1** button is highlighted, clicking on the **RPG HCI** button opens up an RPG HCI window for the Channel 1 RPG, and when the Channel **2** button is highlighted, clicking on **RPG HCI** opens up an RPG HCI window for the Channel 2 RPG.

4.7.3.1.2 MSCF Comms Status Window. Clicking on the **Comms Status** button in the MSCF window opens a Comms Status window. See Figure 4–75. The **Update** button updates the display if there is new status, and clicking on **Close** closes the window. Color coded status information is available for up to three devices. Green status is a link up condition and blue is a link down. To select a device for display, click on the Device line down arrow near the top of the window and then click on a device from the pull down menu. Once selected, a device name remains on the Device line and the windows Title bar, and the window refreshes to display the status information of the selected device. The device selections and a description of each one are as follows:

- CISCO Switch – The status information displayed for the Cisco Switch includes columns for Device Name, OpStatus, Description, Type, Collisions, and IReset.
- CISCO Router – The status information displayed for the Cisco Router includes columns for Device Name, OpStatus, Description, Type, Collisions, and IReset.

- Router Card Status – The status information displayed for the Router card includes columns for Index, Type, Description, OpStatus, Hardware Version, Slots (On Card), Contained by Index, and Slot Number.

4.7.3.1.3 MSCF Power Control Window. Clicking on the **Power Control** button in the Main MSCF window opens the Power Control window. See Figure 4–76. This window is a graphical representation of the eight power outlets on the back of APC MasterSwitch. The name of the device that is plugged into an outlet is displayed beneath the outlet graphic. The state of an outlet is represented by its color. An outlet displayed in green is powered on, and a red outlet is powered off.

This window provides the ability to control power to an individual device or outlet, a combination of outlets, or all outlets at the same time. To select a device(s), click on the associated outlet graphic(s) and its background color changes from white to yellow. Once selected, a user can either **Turn Off**, **Turn On**, or **Reboot** the power to the RPG, RDA/RPG Gateway, or BDDS outlets. To reboot an outlet simply causes its power to turn off for five seconds and then automatically turn back on.

When either the LAN, Router, Comm Server A, Comm Server B, or Comm Server C outlets are selected, the text on the **Turn Off** and **Turn On** buttons is greyed–out, and the button's functionalities are desensitized so that clicking on them does not turn those outlets off or on.

If the user was permitted to turn off either the LAN or Router outlets from this window, the link between the MSCF processor and the APC MasterSwitch would be gone, and then the ability to power those outlets back on from the MSCF would be gone. The user would have to go to the RPG cabinet to turn power back on. At a DoD or FAA site, this would mean a fairly lengthy trip. So, the user is only permitted to reboot those two outlets.

If the user was permitted to turn off either the Comm Server A, Comm Server B, or Comm Server C outlets from this window, the system would respond by simply sending a command to the APC MasterSwitch to power them back on automatically as part of the softwares design to force recovery from an error condition. So, the user is only permitted to reboot those three outlets.

After selecting an outlet(s) and clicking on either the **Turn Off**, **Turn On**, or **Reboot** buttons, a warning_popup window appears restating the command and the outlet(s) that were selected. The user must then decide whether to continue or cancel the selection by clicking on the **Yes** or **No** button. If **No** is selected, then no command is executed, the warning_popup window disappears, and the Power Control window is displayed as it was previously without any outlets selected. If **Yes** is selected, then the previously selected command is executed to the outlet(s) that were selected, the warning_popup window disappears, and the Power Control window is displayed without any outlets selected. If a command is clicked on without first having selected an outlet, a warning_popup window appears that states; "You need to select the appropriate device(s) by clicking on the connector icon.". Clicking on **Continue** returns the user to the Power Control window. An **Update** button is provided that will update the Power Control window display if any change of status is available. Clicking on the **Close** button closes the Power Control window.

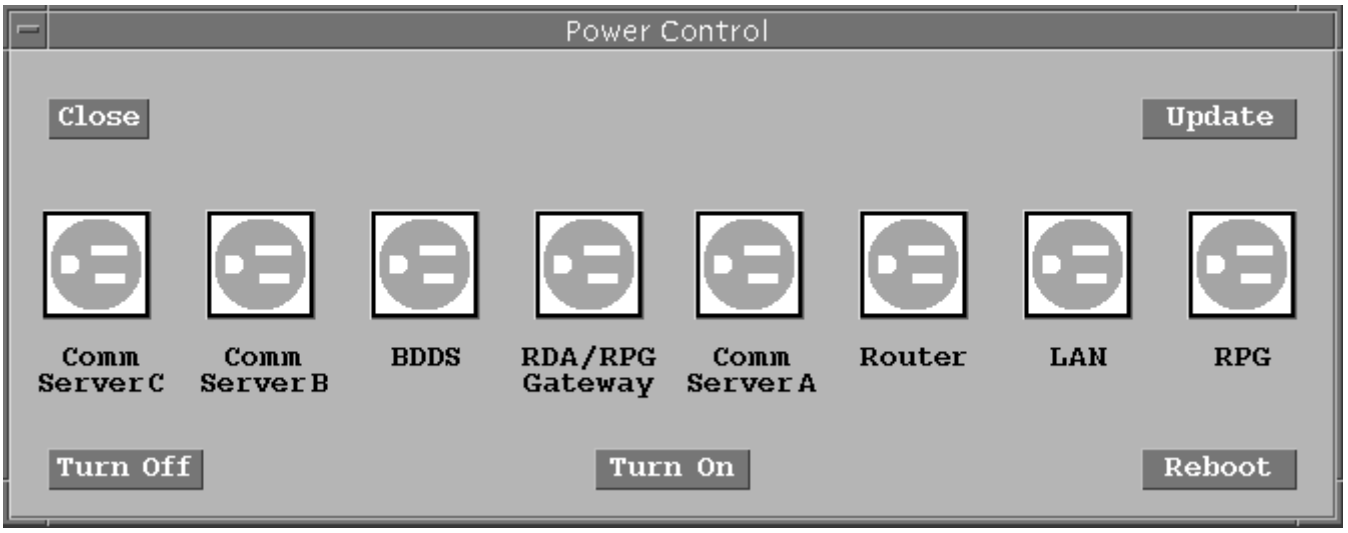

Figure 4–76. MSCF Power Control Window (Coincides with Rear View)

4.7.3.1.4 MSCF RPG HCI. Clicking on the **RPG HCI** button in the Main MSCF window opens the RPG Control/Status window, which is also referred to as the Main Menu. See Figure 4–40. This is the same window that is described in detail is Section 4.7.2.

4.7.3.1.5 MSCF RDA HCI. The **RDA HCI** button is reserved for future software builds and is not implemented at this time.

4.7.3.1.6 MSCF Base Data Distribution Server HCI Window. The **BDDS HCI** button is only displayed when the BDDS option is enabled in the RPG Adaptation Data. Clicking on this button opens the Base Data Distribution Server window. See Figure 4–77. This window contains a status line, a BDDS Clients display box, and five buttons, which are described as follows:

- The status line at the top states either Active in green, Not Active in yellow, or BDDS Started in yellow.
- In the middle is the BDDS Clients display box which lists up to four Clients by User ID and IP–Address. Clicking anywhere on a line highlights that line (white text with black background) and selects that Client. The user can also click and drag to select adjacent Clients. Once selected, a Client can be Terminated as described below.
- Clicking on the **Start BDDS** button starts the BDDS. This button is desensitized, and its text is greyed–out when the BDDS is Active.
- Clicking on the **Stop BDDS** button stops the BDDS. A warning_popup window appears that states “You are about to stop the BDDS. Do you want to continue?” with **Yes** and **No** buttons to chose from. Clicking on **No** closes the warning_popup window without stopping the BDDS. Clicking on **Yes** stops the BDDS and closes the warning_popup window. This button is desensitized, and its text is greyed–out when the BDDS is Not Active.
- Although this window updates automatically, clicking on the **Update Info** button updates the BDDS Clients display box if any change of status is available.

- Clicking on the **Terminate Clients** button terminates all BDDS Clients that are selected. A warning_popup window appears that states "You are about to terminate X number of clients, XXXX. Do you want to continue?" with **Yes** and **No** buttons to chose from. X is the total number of Clients selected, and XXXX is the selected Client User ID. Clicking on **No** closes the warning_popup window without terminating any Clients. Clicking on **Yes** terminates all selected Clients and closes the warning_popup window. Clicking on this button before selecting any Clients causes a warning_popup window to appear that states "Please select Clients first." with a **Continue** button that must be clicked on in order to return the user to the Base Data Distribution Server window.
- Clicking on the **Close** button closes the Base Data Distribution Server window.

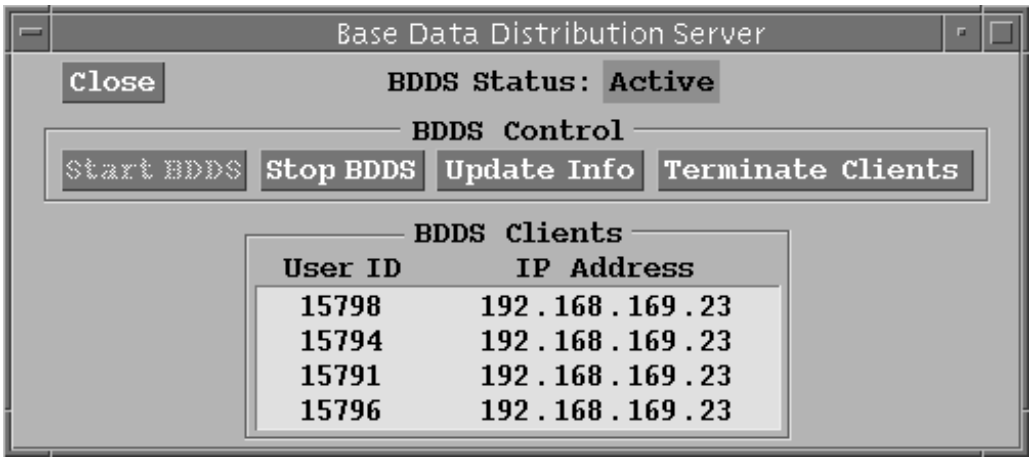

Figure 4–77. MSCF BDDS HCI Window

4.7.4 SWITCHING BETWEEN REDUNDANT CHANNELS.

Redundant systems allow preventive and corrective maintenance to be performed on one channel while the other channel is in normal operation. Only one channel at a time can be on–line which is called the controlling channel. This section contains procedures to switch control from one channel to the other. NWS redundant system channels consists of an RDA only, and FAA redundant system channels consists of an RDA and an RPG. To age the RDA transmitter klystrons evenly, control should be switched between channels every week, even if maintenance isn't required.

4.7.4.1 NWS Redundant Systems. The NWS redundant system's Remote RDA Maintenance Terminal (UD32), located in the Forecast Office, controls the selection/switching of channels. It can command the non–controlling channel to become the controlling channel using the procedure in Table 4–84. A standalone dial modem (UD32A4) and STATMUX (UD26), located with the Remote RDA Maintenance Terminal, connect to a STATMUX (UD105A20) and modem (UD105A21) in the Channel 1 RDA cabinet providing connectivity to both RDADPs. If it becomes necessary to switch channels locally from an RDA Maintenance Terminal use the procedure in the RDA Maintenance Manual, NWS EHB 6–510, Table 4–52.

4.7.4.2 FAA Redundant Systems. In an FAA redundant system, either the Distant MSCF or the RPG Maintenance Terminals can control the selection/switching of channels. The procedure for

using the Distant MSCF is in paragraph 4.7.4.2.1, Table 4–86. The non–controlling channel's RPG Maintenance Terminal can issue the command to become the controlling channel. Subsequently, the RPG commands the communications relay box (UD31) to switch all narrowband connections. Then the RPGs command the RDAs to switch control from one channel to the other. This procedure is in Table 4–85. If it becomes necessary to switch channels locally from an RDA Maintenance Terminal use the procedure in the RDA Maintenance Manual, NWS EHB 6–510, Table 4–48.

Table 4–84. Switching Channels for NWS Redundant Systems from the Remote RDA Maintenance Terminal

Step	Procedure

1	Observe the LED display on the front of the modem (UD32A4) that is next to the Remote RDA Maintenance Terminal (UD32). If the modem is not connected, as indicated by `DATA 14.4 T/D?` on the modem display, perform the following steps:
	a. Press the (ACROSS) button until display reads `Dial From # = 1`.
	b. Press the (ENTER) button.
	c. Observe the modem LED display for the following sequence of messages:
	`DIALING T/D?`
	`DISCONNECT T/D?`
	`OFFHOOK T/D?`
	`TRAINING T/D?`
	`DATA 14.4 T/D?` Indicates modem is connected and transmitting at 14400 bps.

2	To switch control from Channel 1 (UD105) to Channel 2 (UD5), begin with the RDA in Standby and perform the following steps at the Remote RDA Maintenance Terminal: a. Switch the Dual A/B Switch (UD32A2) to the "B" position (Channel 2). b. Press **<Shift>** and **<Port>** simultaneously to display the Applications screen. c. The MODE line should read `LOC OPER` (Local Operate) or `L/R OPER` (Local/Remote Operate), the STAT line should read `STBY` (Standby), and the REDUNDANT line should read `N–C 2` (Non–Controlling Chan. 2). d. Either enter **CONC<Tab>***redundant_password***<CR>** on the COMMAND line (The redundant password is **PINKY**.), or press the **<Tab>** key until the cursor is positioned on the CONT CHAN line and then enter **PINKY<CR>**. e. Observe that the STAT line first reads `STUP` and then `OPER`, the MODE line reads `REM OPER`, and the REDUNDANT line reads `C 2`. (1) If the STAT line doesn't go to `OPER`, enter **OPER<CR>** on the COMMAND line. (2) If the MODE line says `LOC OPER`, enter **ENRC<CR>**.

Table 4–84. Switching Channels for NWS Redundant Systems from the Remote RDA Maintenance Terminal – Continued

Step	Procedure
2 Cont.	f. Switch the Dual A/B Switch (UD32A2) to the "A" position (Channel 1).
	g. The MODE line should read `L/R OPER`, the STAT line should read `STBY`, and the REDUNDANT line should read `N–C 1`.
3	To switch control from Channel 2 (UD5) to Channel 1 (UD105), begin with the RDA in Standby and perform the following steps at the Remote RDA Maintenance Terminal.
	a. Switch the Dual A/B Switch (UD32A2) to the "A" position (Channel 1).
	b. Press **<Shift>** and **<Port>** simultaneously to display the Applications screen.
	c. The MODE line should read `LOC OPER` or `L/R OPER`, the STAT line should read `STBY`, and the REDUNDANT line should read `N–C 1`.
	d. Either enter **CONC<Tab>***redundant_password***<CR>** on the COMMAND line (The redundant password is **PINKY**.), or press the **<Tab>** key until the cursor is positioned on the CONT CHAN line and then enter **PINKY<CR>**.
	e. Observe that the STAT line first reads `STUP` and then `OPER`, the MODE line reads `REM OPER`, and the REDUNDANT line reads `C 1`.
	(1) If the STAT line doesn't go to `OPER`, enter **OPER<CR>** on the COMMAND line.
	(2) If the MODE line says `LOC OPER`, enter **ENRC<CR>**.
	f. Switch the Dual A/B Switch (UD32A2) to the "B" position (Channel 2).
	g. The MODE line should read `L/R OPER`, the STAT line should read `STBY`, and the REDUNDANT line should read `N–C 2`.
4	When Channel 2 is in control, in STANDBY, and in REMOTE CONTROL, the mode is L/R OPER, and the NONC command switches control to Channel 1 as follows:
	a. Set the Dual A/B Switch (UD32A2) to the "B" position (Channel 2).
	b. Press **<Shift>** and **<Port>** simultaneously to display the Applications screen.
	c. The MODE line should read `L/R OPER`, the STAT line should read `STBY`, and the REDUNDANT line should read `C 2`.
	d. Enter **NONC<Tab>***redundant_password***<CR>** on the COMMAND line (The redundant password is **PINKY**.)
	e. Set the Dual A/B Switch (UD32A2) to the "A" position (Channel 1).
	f. The MODE line should read either `LOC OPER` or `L/R OPER`, and the STAT line should read `STBY`.
	g. To put Channel 1 in operate, enter **OPER<CR>** at the COMMAND line. If remote control is desired at the MSCF, enter **ENRC<CR>**.

Table 4–85. Switching Channels for FAA Redundant Systems from the RPG Maintenance Terminal

Step	Procedure
1	To switch control from Channel 1 (UD170/UD105) to Channel 2 (UD70/UD5), perform the following steps at the Channel 1 RPG Maintenance Terminal: a. At the RPG HCI Main Menu, ensure that FAA:1 is Active/Controlling in the Title Bar. Also ensure that RDA Control is set to RPG or Either. b. Click on the **Control** button in the RDA icon at the base of the tower. c. The RDA Control/Status window will appear. d. Locate the area titled RDA State, and click on **Standby**. e. Click **Yes** to confirm the change of state. f. Click on the **Close** button in the RDA Control/Status window.
2	Perform the following steps at the Channel 2 RPG Maintenance Terminal: a. At the RPG HCI Main Menu, ensure that FAA:2 is Inactive/Non–controlling in the Title Bar. Also ensure that RDA Control is Either or RPG. b. Click on the **Control** button in the RDA icon at the base of the tower. c. Unlock the RDA Control/Status window by clicking on the Lock button, selecting a LOCA, entering the correct password, and pressing **<CR>**. d. Locate the area titled Redundant Control, and click on the **Controlling** button to change Channel 2 (Local Channel) to Controlling. e. Click **Yes** to confirm the change of controlling channels. f. The RPG HCI Main Menu Title Bar shows FAA:2 is now Active/Controlling. g. Locate the area titled RDA State, and click on **Operate**. h. Click **Yes** to confirm the change of state. i. Click on the **Close** button in the RDA Control/Status window.
3	METHOD #1. To switch control from Channel 2 (UD70/UD5) to Channel 1 (UD170/UD105), perform the following steps at the Channel 2 RPG Maintenance Terminal: a. At the RPG HCI Main Menu, ensure that FAA:2 is Active/Controlling in the Title Bar. Also ensure that RDA Control is set to RPG or Either. b. Click on the **Control** button in the RDA icon at the base of the tower. c. Unlock the RDA Control/Status window by clicking on the Lock button, selecting a LOCA, entering the correct password, and pressing **<CR>**. d. Locate the area titled RDA State, and click on **Standby**. e. Click **Yes** to confirm the change of state. f. Locate the area titled Redundant Control, and click on the **Non–controlling** button to change Channel 2 (Local Channel) to the Non–Controlling channel.

Table 4–85. Switching Channels for FAA Redundant Systems from the RPG Maintenance Terminal – Continued

Step	Procedure
3 Cont.	g. Click **Yes** to confirm the change of controlling channels.
	h. The RPG HCI Main Menu Title Bar shows FAA:2 is Inactive/Non–controlling.
	i. Click on the **Close** button in the RDA Control/Status window.
4	Perform the following steps at the Channel 1 RPG Maintenance Terminal:
	a. At the RPG HCI Main Menu, ensure that FAA:1 is Active/Controlling in the Title Bar. Also ensure that RDA Control is set to RPG or Either.
	b. Click on the **Control** button in the RDA icon at the base of the tower.
	c. The RDA Control/Status window will appear.
	d. Locate the area titled RDA State, and click on **Operate**.
	e. Click **Yes** to confirm the change of state.
	f. Click on the **Close** button in the RDA Control/Status window.
5	METHOD #2. To switch control from Channel 2 to Channel 1 perform the following steps at the Channel 2 RPG Maintenance Terminal:
	a. At the RPG HCI Main Menu, ensure that FAA:2 is Active/Controlling in the Title Bar. Also ensure that RDA Control is set to RPG or Either.
	b. Click on the **Control** button in the RDA icon at the base of the tower.
	c. The RDA Control/Status window will appear.
	d. Locate the area titled RDA State, and click on **Standby**.
	e. Click **Yes** to confirm the change of state.
	f. Click on the **Close** button in the RDA Control/Status window.
6	Perform the following steps at the Channel 1 RPG Maintenance Terminal:
	a. At the RPG HCI Main Menu, ensure that FAA:1 is Inactive/Non–controlling in the Title Bar. Also ensure that RDA Control is set to RPG or Either.
	b. Click on the **Control** button in the RDA icon at the base of the tower.
	c. Unlock the RDA Control/Status window by clicking on the Lock button, selecting a LOCA, entering the correct password, and pressing **<CR>**.
	d. Locate the area titled Redundant Control, and click on the **Controlling** button to change Channel 1 (Local Channel) to the Controlling channel.
	e. Click **Yes** to confirm the change of controlling channels.

Table 4–85. Switching Channels for FAA Redundant Systems from the RPG Maintenance Terminal – Continued

Step	Procedure
6 Cont.	f. The RPG HCI Main Menu Title Bar shows FAA:1 is now Active/Controlling.
	g. Locate the area titled RDA State, and click on **Operate**.
	h. Click **Yes** to confirm the change of state.
	i. Click on the **Close** button in the RDA Control/Status window.

4.7.4.2.1 Switching Between Channels At The Distant MSCF (FAA Redundant Systems Only). The FAA redundant system has two RPGs, and one Distant MSCF (UD71) connected via dedicated–port modems or DSU/CSU router modules used with frame relay service. When dedicated–port modems are used, the modem at the Distant MSCF (UD71A5) is connected to a dedicated phone line. The other end of the line goes into the narrowband communications relay box (UD31) in the RDA/RPG equipment shelter with all of the other narrowband lines. From there, it can get switched where it will connect to another modem in either the Channel 1 or Channel 2 RPG. When CSU/DSUs are used with frame relay service, the DSU/CSU at the Distant MSCF is connected to a Frame Relay Hub Router (UD75) via dedicated frame relay service. The other end of the frame relay circuit goes into the narrowband communications relay box (UD31) in the RDA/RPG equipment shelter with all of the narrowband lines. From there it gets switched where it will connect to the other DSU/CSU in either the Channel 1 or Channel 2 RPG. The Distant MSCF will always be connected to the controlling channel's RPG along with all of the narrowband lines. When control is switched from one channel to the other, the entire bank of narrowband lines, including the dedicated Distant MSCF line, is switched from one RPG to the other. The Distant MSCF can run either one or both of the RPG HCIs for RPG 1 and RPG 2 regardless of which channel it's connected to. The procedure for switching FAA redundant system channels from the Distant MSCF is in Table 4–86.

NOTE

The modem connection and the frame relay connection that provides the Distant MSCF connectivity is a slower connection than Local MSCF. Therefore, command feedback will be slower and the user should exercise patience while waiting for the system to respond.

During the following procedure, the RPG HCI will momentarily disappear and then reappear as channels are switched.

Table 4–86. Switching Channels for FAA Redundant Systems from the Distant MSCF

Step	Procedure
1	To switch control from Channel 1 (UD170/UD105) to Channel 2 (UD70/UD5), perform the following steps at the Distant MSCF using the RPG HCI for Channel 1: a. If Channel 1 is not already selected, then in the upper right hand corner of the MSCF Display window, click on the **1** button in the Channels area. b. At the RPG HCI Main Menu, ensure that FAA:1 is Active/Controlling in the Title Bar. Also ensure that RDA Control is set to RPG or Either. c. Click on the **Control** button in the RDA icon at the base of the tower. d. The RDA Control/Status window will appear. e. Locate the area titled RDA State, and click on **Standby**. f. Click **Yes** to confirm the change of state. g. Click on the **Close** button in the RDA Control/Status window.
2	Perform the following steps at the Distant MSCF using the RPG HCI for Channel 2: a. If Channel 2 is not already selected, then in the upper right hand corner of the MSCF Display window, click on the **2** button in the Channels area. b. At the RPG HCI Main Menu, ensure that FAA:2 is Inactive/Non–controlling in the Title Bar. Also ensure that RDA Control is set to RPG or Either. c. Click on the **Control** button in the RDA icon at the base of the tower. d. Unlock the RDA Control/Status window by clicking on the Lock button, selecting a LOCA, entering the correct password, and pressing **<CR>**. e. Locate the area titled Redundant Control, and click on the **Controlling** button to change Channel 2 (Local Channel) to Controlling. f. Click **Yes** to confirm the change of controlling channels. g. The RPG HCI Main Menu Title Bar shows FAA:2 is now Active/Controlling. h. Locate the area titled RDA State, and click on **Operate**. i. Click **Yes** to confirm the change of state. j. Click on the **Close** button in the RDA Control/Status window.
3	METHOD #1. To switch control from Channel 2 (UD70/UD5) to Channel 1 (UD170/UD105), perform the following steps at the Distant MSCF using Channel 2's RPG HCI: a. If Channel 2 is not already selected, then in the upper right hand corner of the MSCF Display window, click on the **2** button in the Channels area. b. At the RPG HCI Main Menu, ensure that FAA:2 is Active/Controlling in the Title Bar. Also ensure that RDA Control is set to RPG or Either. c. Click on the **Control** button in the RDA icon at the base of the tower.

Table 4–86. Switching Channels for FAA Redundant Systems from the Distant MSCF – Continued

Step	Procedure
3 Cont.	d. Unlock the RDA Control/Status window by clicking on the Lock button, selecting a LOCA, entering the correct password, and pressing **<CR>**.
	e. Locate the area titled RDA State, and click on **Standby**.
	f. Click **Yes** to confirm the change of state.
	g. Locate the area titled Redundant Control, and click on the **Non–controlling** button to change Channel 2 (Local Channel) to the Non–Controlling channel.
	h. Click **Yes** to confirm the change of controlling channels.
	i. The RPG HCI Main Menu Title Bar shows FAA:2 is Inactive/Non–controlling.
	j. Click on the **Close** button in the RDA Control/Status window.
4	Perform the following steps at the Distant MSCF using the RPG HCI for Channel 1:
	a. If Channel 1 is not already selected, then in the upper right hand corner of the MSCF Display window, click on the **1** button in the Channels area.
	b. At the RPG HCI Main Menu, ensure that FAA:1 is Active/Controlling in the Title Bar. Also ensure that RDA Control is set to RPG or Either.
	c. Click on the **Control** button in the RDA icon at the base of the tower.
	d. The RDA Control/Status window will appear.
	e. Locate the area titled RDA State, and click on **Operate**.
	f. Click **Yes** to confirm the change of state.
	g. Click on the **Close** button in the RDA Control/Status window.
5	METHOD #2. To switch control from Channel 2 (UD70/UD5) to Channel 1 (UD170/UD105), perform the following steps at the Distant MSCF using Channel 2's RPG HCI:
	a. If Channel 2 is not already selected, then in the upper right hand corner of the MSCF Display window, click on the **2** button in the Channels area.
	b. At the RPG HCI Main Menu, ensure that FAA:2 is Active/Controlling in the Title Bar. Also ensure that RDA Control is set to RPG or Either.
	c. Click on the **Control** button in the RDA icon at the base of the tower.
	d. The RDA Control/Status window will appear.
	e. Locate the area titled RDA State, and click on **Standby**.
	f. Click **Yes** to confirm the change of state.
	g. Click on the **Close** button in the RDA Control/Status window.

Table 4–86. Switching Channels for FAA Redundant Systems from the Distant MSCF – Continued

Step	Procedure
6	Perform the following steps at the Distant MSCF using the RPG HCI for Channel 1: a. If Channel 1 is not already selected, then in the upper right hand corner of the MSCF Display window, click on the **1** button in the Channels area. b. At the RPG HCI Main Menu, ensure that FAA:1 is Inactive/Non–controlling in the Title Bar. Also ensure that RDA Control is set to RPG or Either. c. Click on the **Control** button in the RDA icon at the base of the tower. d. Unlock the RDA Control/Status window by clicking on the Lock button, selecting a LOCA, entering the correct password, and pressing **<CR>**. e. Locate the area titled Redundant Control, and click on the **Controlling** button to change Channel 1 (Local Channel) to the Controlling channel. f. Click **Yes** to confirm the change of controlling channels. g. The RPG HCI Main Menu Title Bar shows FAA:1 is now Active/Controlling. h. Locate the area titled RDA State, and click on **Operate**. i. Click **Yes** to confirm the change of state. j. Click on the **Close** button in the RDA Control/Status window.

Section 4.8. Off–Line Diagnostic Tests

NOTE

This chapter and its corresponding sections refer to the RPGPCA as UD70. Unless otherwise specified for FAA redundant systems, this information also applies to RPGPCA UD170.

4.8.1 INTRODUCTION.

There are two main items for which off–line diagnostics tests can be performed. These are the Sun Ultra 5/10 Processors and the PTI MPS800 Communication Servers. The Sun processor diagnostics are discussed in paragraph 4.8.2 and the Communication Server tests are discussed in paragraph 4.8.3.

NOTES

This section will discuss these diagnostics in their entirety as an all–encompassing reference. However, when needed for specific fault isolation requirements (Section 6–3), detailed procedures are provided in that section. There are no mandatory or periodic requirements indicating that any diagnostics in this section must be accomplished.

Command entries and mouse selections are shown in this section in **bold** type. Variable names are normally shown with a unique font (e.g., *variable_name*). Within a specified command string that must be entered, the variable placeholders are not bold type; however, all portions of the command that are entered exactly as shown are in bold type. The variable placeholder within the command string must be replaced with a name, address, etc. unique to each system and the user is told how to formulate the entry, or directed to where to find this information. Since the keyboard in use may have either an “Enter” key or a “Return” key, the end of the command line is delineated with a **<CR>**. Unless stated otherwise, each command line shown must be “entered” to be processed. Also, directory names/paths shown outside of a command example are *italicized* for clarity purposes.

NOTE

This section will discuss some graphical manipulations using a mouse. The word "click" indicates a standard left mouse click. The symbol ▶ is used to indicate subsequent left clicks through sub–menu selections. When a right click or double–click is required, it is specifically indicated.

4.8.2 SUN ULTRA 5/10 DIAGNOSTICS.

4.8.2.1 General Information. All off–line diagnostics in this paragraph can be executed from a normal Sun workstation. However, in several cases, the examples also indicate that the diagnostics can be executed from a laptop or other serial console device connected to serial port A on the processor. This is convenient for recording the diagnostics sessions for future reference. Since this is not mandatory and this section is provided solely as a general purpose reference, no specific guidance will be given in this area. In general, the following will be required to run the diagnostics from a laptop or other serial console device:

- It must be connected using a standard DB25(M)–DB25(F) null modem and a serial cable. The serial cable will be DB9(F)–DB25(M) cable if a laptop is being used.
- On a laptop or any DOS–based console device, a standard terminal emulation program must be used (such PCPlus or HyperTerminal) and it would be set to 9600 baud, no parity, 8 data bits, and 1 stop bit (9600,8,1,N).
- After setting the necessary boot PROM parameters but prior to resetting the Sun processor to start the diagnostics, the normal Sun keyboard must be disconnected at the rear of the Sun processor.

The following two types of off–line diagnostics are available for the Sun Ultra 5/10 processors:

- Power On Self Test (POST)
- OpenBoot PROM On–Board Diagnostics

4.8.2.2 Power On Self Test. With the selection of a few boot PROM parameters, the processor will perform a POST when it is powered back on. To set boot PROM parameters, the system must be halted and be at an ok prompt. If the processor is not already at a halt state, then halt the processor using the procedures in steps 3 through 5 from Table 4–52. By default, POST is set to run at the maximum (max) level. Enter **setenv auto–boot? false<CR>** to keep the system from booting in case POST is executed again.

To get POST to run, turn on the diag switch variable by entering **setenv diag–switch? true<CR>** at the ok prompt. Enter **power–off<CR>** at the ok prompt pending determination of display method (paragraph 4.8.2.2.1 below). POST will run when the system is powered back on (paragraph 4.8.2.2.2 below).

4.8.2.2.1 POST Display Methods. The preferred method for displaying POST is with some type of serial terminal or console connected to serial port A of the processor under test. This could be from a laptop or other PC running a terminal emulation program such as ProComm or HyperTerminal. See paragraph 4.8.2.1 above for general guidance for connecting a laptop or PC. This could also be done with access to another Sun processor's serial port and through use of a terminal emulation command (tip) from that processor. In either case, disconnect the normal keyboard from the processor running POST when performing the test in this manner.

If a console–type connection is not connected to serial port A of the processor under test, the POST results will attempt to display on the normal Graphics monitor; however, the results will not be seen because the graphics are not initialized yet. If a console–type connection is not connected to serial port A of the processor under test, some information can be determined by watching the keyboard lights. Table 4–87 shows the possible keyboard patterns.

Table 4–87. POST Keyboard Light Indications

Meaning	Caps Lock	Compose	Scroll Lock	Num Lock
POST in progress	Blink*	Off	Off	Off
POST successfully completed	Off	Off	Off	Off
System board failure	On	Off	Off	On
No memory found	On	Off	On	Off
Bad CPU	On	On	On	Off

* Initially it will come on solid for a short period and then enter a very slow "blink" mode.

4.8.2.2.2 POST Execution. Press the power (Standby) switch at the front of the Ultra 5/10 processor (assumes processor is presently in a "controlled" power–off state via "power–off" command at an ok prompt). This will power the unit on and POST will execute. Table 4–88 shows a no–fault execution of POST at minimum level. Table 4–89 shows a no–fault execution of POST at maximum level. These are only seen with a laptop or other console–type device connected. If this type display is not connected, a blank Sun monitor will be observed for about two minutes, then the monitor will turn on and the final portion of the POST will be displayed.

Table 4–88. POST Execution (min)

```
@(#) Sun Ultra 5/10 UPA/PCI 3.25 Version 3 created 2000/06/29 14:12
Probing keyboard Done
%o0 = 0000.0000.0000.2001

Executing Power On SelfTest

@(#) Sun Ultra 5/10 (Darwin) POST 3.1.0 (Build No. 626) 13:56 on 06/27/00
```

```
CPU: UltraSPARC−LC (Clock Frequency: 440MHz, Ecache Size: 2048KB)

Init POST BSS
Init System BSS
NVRAM
NVRAM Battery Detect Test
NVRAM Scratch Addr Test
NVRAM Scratch Data Test
DMMU TLB Tags
DMMU TLB Tag Access Test
DMMU TLB RAM
DMMU TLB RAM Access Test
Probe Ecache
Probe Ecache
Ecache Tests
Ecache RAM Addr Test
Ecache Tag Addr Test
All CPU Basic Tests
V9 Instruction Test
CPU Soft Trap Test
CPU Softint Reg and Int Test
All Basic MMU Tests
DMMU Primary Context Reg Test
DMMU Secondary Context Reg Test
DMMU TSB Reg Test
DMMU Tag Access Reg Test
IMMU TSB Reg Test
IMMU Tag Access Reg Test
All Basic Cache Tests
Dcache RAM Test
Icache RAM Test
Memory Probe
Probe Memory
bank 0:  0MB
INFO:    256MB Bank 2
Sabre MCU Control & Status Regs Init and Tests
Init Sabre MCU Control & Status Regs
Initializing SC registers in SabreIO
Memory Init
Ecache Access Test
Malloc Post Memory
Memory Addr with Ecache
Load Post In Memory
Run POST from MEM
loaded POST in memory
Map PROM/STACK/NVRAM in DMMU
Update Master Stack/Frame Pointers
```

```
All FPU Basic Tests
FPU Regs Test
FPU Move Regs Test
UPA Data Bus Line Test
Memory Tests
Init Memory
INFO:     0MB at bank 0 stack 0
INFO:     0MB at bank 0 stack 1
INFO:   256MB at bank 2 stack 0 (2 dimms per bank)
INFO:     0MB at bank 2 stack 1
ECC Memory Addr Test
INFO:     0MB at bank 0 stack 0
INFO:     0MB at bank 0 stack 1
INFO:   256MB at bank 2 stack 0 (2 dimms per bank)
INFO:     0MB at bank 2 stack 1
All Basic Sabre MMU Tests
Init Sabre
Interrupt Map (short) Reg Test
Interrupt Set/Clr Reg Test
Sabre IOMMU Regs Test
Sabre IOMMU RAM Address Test
Sabre IOMMU CAM Address Test
PBMA PCI Config Space Regs Test
PBMA Control/Status Reg Test
PBMA Diag Reg Test
Sabre IO Regs Test
All Advanced CPU Tests
IU ASI Access Test
FPU ASI Access Test
All CPU Error Reporting Tests
CPU Data Access Trap Test
CPU Addr Align Trap Test
DMMU Access Priv Page Test
DMMU Write Protected Page Test
All Advanced Sabre IOMMU Tests
Init Sabre
Consist DMA Rd, IOMMU miss Ebus Test
All Basic Cheerio Tests
Cheerio Ebus PCI Config Space Test
Cheerio Ethernet PCI Config Space Test
Cheerio Init
All Sabre IOMMU Error Reporting Tests
Init Sabre
PIO Read, Master Abort Test
PIO Read, Target Abort Test

Status of this POST run:PASS
```

```
manfacturing mode=OFF
Time Stamp [hour:min:sec] 02:24:29  [month/date year] 03/06 2001

Power On Selftest Completed
   Status  = 0000.0000.0000.0000 ffff.ffff.f00b.4858 0002.3333.0200.001b
Software Power ON

@(#) Sun Ultra 5/10 UPA/PCI 3.25 Version 3 created 2000/06/29 14:12
Clearing E$ Tags  Done
Clearing I/D TLBs Done
Probing Memory Done
MEM BASE = 0000.0000.1000.0000
MEM SIZE = 0000.0000.1000.0000
11–Column Mode Enabled
MMUs ON
Copy Done
PC = 0000.01ff.f000.201c
PC = 0000.0000.0000.2060
Decompressing into Memory Done
Size = 0000.0000.0006.e320
ttya initialized
Reset Control: BXIR:0 BPOR:0 SXIR:0 SPOR:1 POR:0
UltraSPARC–IIi 2–2 module
Probing Memory Bank #0   0 +   0 :   0 Megabytes
Probing Memory Bank #2 128 + 128 : 256 Megabytes
Probing UPA Slot at 1e,0 Nothing There
Probing /pci@1f,0/pci@1,1 at Device 1  pci108e,1000 network
Probing /pci@1f,0/pci@1,1 at Device 2  SUNW,m64B
Probing /pci@1f,0/pci@1,1 at Device 3  ide disk cdrom
Probing /pci@1f,0/pci@1 at Device 1  scsi disk tape scsi disk tape
Probing /pci@1f,0/pci@1 at Device 2  pci11c9,11
Probing /pci@1f,0/pci@1 at Device 3  Nothing there
Probing /pci@1f,0/pci@1 at Device 4  pci10b5,9050
```

Table 4–89. POST Execution (max)

```
@(#) Sun Ultra 5/10 UPA/PCI 3.25 Version 3 created 2000/06/29 14:12
Probing keyboard Done

Setting diag–switch? because of L1–D keyboard command.

%o0 = 0000.0000.0000.4001

Executing Power On SelfTest

@(#) Sun Ultra 5/10 (Darwin) POST 3.1.0 (Build No. 626) 13:56 on 06/27/00
```

```
CPU: UltraSPARC–LC (Clock Frequency: 440MHz, Ecache Size: 2048KB)

Init POST BSS
        Init System BSS
NVRAM
NVRAM Battery Detect Test
NVRAM Scratch Addr Test
NVRAM Scratch Data Test
DMMU TLB Tags
DMMU TLB Tag Access Test
DMMU TLB RAM
DMMU TLB RAM Access Test
Probe Ecache
Probe Ecache
Ecache Tests
Ecache RAM Addr Test
Ecache Tag Addr Test
Ecache RAM Test
Ecache Tag Test
All CPU Basic Tests
V9 Instruction Test
CPU Tick and Tick Compare Reg Test
CPU Soft Trap Test
CPU Softint Reg and Int Test
All Basic MMU Tests
DMMU Primary Context Reg Test
DMMU Secondary Context Reg Test
DMMU TSB Reg Test
DMMU Tag Access Reg Test
DMMU VA Watchpoint Reg Test
DMMU PA Watchpoint Reg Test
IMMU TSB Reg Test
IMMU Tag Access Reg Test
All Basic Cache Tests
Dcache RAM Test
Dcache Tag Test
Icache RAM Test
Icache Tag Test
Icache Next Test
Icache Predecode Test
Memory Probe
Probe Memory
bank 0:  0MB
INFO:    256MB Bank 2
Sabre MCU Control & Status Regs Init and Tests
Init Sabre MCU Control & Status Regs
Initializing SC registers in SabreIO
```

```
Memory Init
Ecache Access Test
Malloc Post Memory
Memory Addr with Ecache
Load Post In Memory
Run POST from MEM
...........
loaded POST in memory
Map PROM/STACK/NVRAM in DMMU
Update Master Stack/Frame Pointers
All FPU Basic Tests
FPU Regs Test
FPU Move Regs Test
FPU State Reg Test
FPU Functional Test
FPU Trap Test
PA Data Bus Line Test
Memory Tests
Init Memory
INFO:     0MB at bank 0 stack 0
INFO:     0MB at bank 0 stack 1
INFO:   256MB at bank 2 stack 0 (2 dimms per bank)
INFO:     0MB at bank 2 stack 1
Memory Addr with Ecache Test
INFO:     0MB at bank 0 stack 0
INFO:     0MB at bank 0 stack 1
INFO:   256MB at bank 2 stack 0 (2 dimms per bank)
INFO:     0MB at bank 2 stack 1
ECC Memory Addr Test
INFO:     0MB at bank 0 stack 0
INFO:     0MB at bank 0 stack 1
INFO:   256MB at bank 2 stack 0 (2 dimms per bank)
INFO:     0MB at bank 2 stack 1
Block Memory Addr Test
INFO:     0MB at bank 0 stack 0
INFO:     0MB at bank 0 stack 1
INFO:   256MB at bank 2 stack 0 (2 dimms per bank)
INFO:     0MB at bank 2 stack 1
Block Memory Test
INFO:     0MB at bank 0 stack 0
INFO:     0MB at bank 0 stack 1
INFO:   256MB at bank 2 stack 0 (2 dimms per bank)
Write 0x33333333.33333333
Read
Write 0x55555555.55555555
Read
Write 0xcccccccc.cccccccc
```

```
Read
Write 0xaaaaaaaa.aaaaaaaa
Read

INFO:     0MB at bank 2 stack 1
ECC Blk Memory Test
INFO:     0MB at bank 0 stack 0
INFO:     0MB at bank 0 stack 1
INFO:   256MB at bank 2 stack 0 (2 dimms per bank)
Write 0xa5a5a5a5.a5a5a5a5
Read
Write 0x96969696.96969696
Read
Write 0xbbbbbbbb.bbbbbbbb
Read
Write 0xdddddddd.dddddddd
Read


INFO:     0MB at bank 2 stack 1
All Basic Sabre MMU Tests
Init Sabre
PIO Decoder and BCT Test
PCI Byte Enable Test
Interrupt Map (short) Reg Test
Interrupt Set/Clr Reg Test
Sabre IOMMU Regs Test
Sabre IOMMU RAM Address Test
Sabre IOMMU CAM Address Test
IOMMU TLB Compare Test
IOMMU TLB Flush Test
PBMA PCI Config Space Regs Test
PBMA Control/Status Reg Test
PBMA Diag Reg Test
Sabre IO Regs Test
All Advanced CPU Tests
DMMU Hit/Miss Test
IMMU Hit/Miss Test
DMMU Little Endian Test
IU ASI Access Test
FPU ASI Access Test
Ecache Thrash Test
All CPU Error Reporting Tests
CPU Data Access Trap Test
CPU Addr Align Trap Test
DMMU Access Priv Page Test
DMMU Write Protected Page Test
```

```
All Advanced Sabre IOMMU Tests
Init Sabre
Consist DMA Rd, IOMMU miss Ebus Test
Consist DMA Rd, IOMMU hit Ebus Test
Consist DMA Wr, IOMMU miss Ebus Test
Consist DMA Wr, IOMMU hit Ebus Test
Pass–Thru DMA Rd, Ebus device Test
Pass–Thru DMA Wr, Ebus device Test
Consist DMA Rd, IOMMU LRU Lock Ebus Test
Consist DMA Wr, IOMMU LRU Locked Ebus Test
All Basic Cheerio Tests
Cheerio Ebus PCI Config Space Test
Cheerio Ethernet PCI Config Space Test
Cheerio Init
All Sabre IOMMU Error Reporting Tests
Init Sabre
PIO Read, Master Abort Test
PIO Read, Target Abort Test

Status of this POST run:
PASS
manfacturing mode=OFF
Time Stamp [hour:min:sec] 01:46:05  [month/date year] 03/06 2001

Power On Selftest Completed
   Status  = 0000.0000.0000.0000 ffff.ffff.f00b.4858 0002.3333.0200.001b
Software Power ON

@(#) Sun Ultra 5/10 UPA/PCI 3.25 Version 3 created 2000/06/29 14:12
Clearing E$ Tags  Done
Clearing I/D TLBs Done
Probing Memory Done
MEM BASE = 0000.0000.1000.0000
MEM SIZE = 0000.0000.1000.0000
11–Column Mode Enabled
MMUs ON
Copy Done
PC = 0000.01ff.f000.201c
PC = 0000.0000.0000.2060
Decompressing into Memory Done
Size = 0000.0000.0006.e320
ttya initialized
Reset Control: BXIR:0 BPOR:0 SXIR:0 SPOR:1 POR:0
UltraSPARC–IIi 2–2 module
Probing Memory Bank #0   0 +   0 :   0 Megabytes
Probing Memory Bank #2 128 + 128 : 256 Megabytes
Probing UPA Slot at 1e,0 Nothing There
```

```
Probing /pci@1f,0/pci@1,1 at Device 1  pci108e,1000 network
Probing /pci@1f,0/pci@1,1 at Device 2  SUNW,m64B
Probing /pci@1f,0/pci@1,1 at Device 3  ide disk cdrom
Probing /pci@1f,0/pci@1 at Device 1  scsi disk tape scsi disk tape
Probing /pci@1f,0/pci@1 at Device 2  pci11c9,11
Probing /pci@1f,0/pci@1 at Device 3  Nothing there
Probing /pci@1f,0/pci@1 at Device 4  pci10b5,9050
```

When "Timeout waiting for ARP/RARP packet" messages are observed, POST is completed.

4.8.2.2.3 POST Termination. The following indicates how to terminate POST and allow for a normal system boot (assuming the processor will boot).

1. If a console was connected to serial port A, disconnect this console connection and reconnect the normal Sun keyboard. If a console was not connected to serial port A, proceed to step 3.
2. Power the processor off at the back of the unit. Power the processor back on and then immediately press the **Stop** and **N** keys simultaneously. This should reset the boot PROM parameters back to their defaults and the system should boot normally. If this does not work and the POST is observed on the normal Sun monitor, just allow it to complete and then proceed to step 3.
3. Using the normal Sun keyboard/monitor, reset boot PROM variables to default as follows:
   a. If not already at an ok prompt, simultaneously press the **Stop** and **A** keys on the normal keyboard to get to an ok prompt.
   b. At the ok prompt, enter **set–defaults<CR>**
   c. At the ok prompt, enter **reset–all<CR>**. This effectively cycles power to the unit. The system should boot normally (if it can boot).

4.8.2.3 Open Boot PROM Diagnostics. These diagnostics are "on–board" diagnostics that are run from the Sun's boot PROM. Paragraph 4.8.2.3.1 describes some stand–alone diagnostics tests. Paragraph 4.8.2.3.2 describes the OBDiag program which is a menu–driven diagnostic tool.

4.8.2.3.1 Stand–Alone Boot PROM Diagnostics. There are several stand–alone diagnostics tests that can be run from the Boot PROM. No special settings are required to run these tests, but the system must be halted and at an ok prompt. If the processor is not already at a halt state (at an ok prompt), then halt the processor using the procedures in steps 3 through 5 from Table 4–52. As indicated in paragraph 4.8.2.2.1, these tests can also be executed from a laptop or other serial console connected to serial port A (normal keyboard disconnected). The following five tests can be executed from the ok prompt (examples show a no–fault execution of each test):

NOTE

In these procedures, an example is combined into the procedure. Command entries are shown in bold and example responses in non–bold.

1. Prior to starting these tests, enter **reset–all<CR>** to recycle power to the processor and then press the **Stop** and **A** key simultaneously when the system starts to boot (to stop the boot).
2. Test of Integrated Drive Electronics (IDE) devices:

```
ok probe-ide<CR>
  Device 0  ( Primary Master )
          ATA Model: ST39140A


  Device 1  ( Primary Slave )
          Not Present

  Device 2  ( Secondary Master )
         Removable ATAPI Model: CRD-8322B


  Device 3  ( Secondary Slave )
         Not Present
```

3. Test of clock:

```
ok watch-clock<CR>
Watching the 'seconds' register of the real time clock
chip.
It should be 'ticking' once a second.
Type any key to stop.
2 3 4 5 6 7 8 9 10
```

4. Test of network interface devices:

```
ok watch-net<CR>
Internal loopback test -- succeeded.
Transceiver check  -- Using Onboard Transceiver - Link
Up.
passed
Using Onboard Transceiver - Link Up.
Looking for Ethernet Packets.
'.' is a Good Packet.  'X' is a Bad Packet.
Type any key to stop.
```

5. Test of floppy device (need formatted floppy in drive):

```
ok test floppy<CR>
Testing floppy disk system.  A formatted disk should be
in the drive.
Test succeeded.
```

6. Test of display:

```
ok test screen<CR>
Display not installed  (If running from laptop.)
Test hardware registers -  passed Ok
Test RamDAC -  passed Ok
Test Frame buffer -  passed Ok    (Takes about 30 seconds.)
```

4.8.2.3.2 OBDiag Diagnostic Tool. To get OBDiag to run, boot PROM parameters must be selected and then the power must be cycled to the processor. To set boot PROM parameters, the system must be halted and at an ok prompt. If the processor is not already at a halt state, then halt the processor using the procedures in steps 3 through 5 from Table 4–52. To enter diag mode, enter **setenv diag–switch? true<CR>** at the ok prompt. Then enter **setenv mfg–mode on<CR>** at the ok prompt. Finally, enter **setenv auto–boot? false<CR>** at the ok prompt.

Enter **power–off<CR>** at the ok prompt. As indicated in paragraph 4.8.2.2.1, these tests can also be executed from a laptop or other serial console device connected to serial port A. If it is desired to run this from a laptop or other serial console connected to serial port A, connect it at this time and disconnect the normal Sun keyboard. No matter what type display method is used, press the Standby button on the front of the processor to power it back on. The system will first run POST (only minimal display at end of POST if using Sun monitor). If necessary, enter a couple of **<CR>**s or enter **Stop–A** to get back to an ok prompt (primarily if ARP/RARP–type messages are observed). At that point, enter **obdiag<CR>**.

At the OBDiag menu, enter **16<CR>** to enable script debug messages and then enter **18<CR>** to disable external loopback tests. Also, install a formatted floppy into the floppy drive (DOS format ok). From the menu, individual tests can be executed or all tests can be executed at once with selection of menu item 13. Enter **13<CR>** to to run all the tests. Table 4–90 shows an example of running all tests at once.

Table 4–90. OBDiag Execution

NOTE

The following is an example of running obdiag from the Sun workstation. See the end of the example for deviations if this is ran from a laptop or other serial console device connected to serial port A. Also, note that Audio Test always fails because of an expected loopback, even though external loopbacks were disabled.

```
ok obdiag<CR>

            OBDiag Menu

  0 ..... PCI/Cheerio
  1 ..... EBUS DMA/TCR Registers
```

```
  2 ..... Ethernet
  3 ..... Keyboard
  4 ..... Mouse
  5 ..... Floppy
  6 ..... Parallel Port
  7 ..... Serial Port A
  8 ..... Serial Port B
  9 ..... NVRAM
 10 ..... Audio
 11 ..... EIDE
 12 ..... Video
 13 ..... All Above
 14 ..... Quit
 15 ..... Display this Menu
 16 ..... Toggle script-debug
 17 ..... Enable External Loopback Tests
 18 ..... Disable External Loopback Tests

Enter (0-13 tests, 14 -Quit, 15 -Menu) ===> 16<CR>
Enter (0-13 tests, 14 -Quit, 15 -Menu) ===> 18<CR>
Enter (0-13 tests, 14 -Quit, 15 -Menu) ===> 13<CR>

TEST='all_pci/cheerio_test'
SUBTEST='vendor_id_test'
SUBTEST='device_id_test'
SUBTEST='mixmode_read'
SUBTEST='e2_class_test'
SUBTEST='status_reg_walk1'
SUBTEST='line_size_walk1'
SUBTEST='latency_walk1'
SUBTEST='line_walk1'
SUBTEST='pin_test'

TEST='all_dma/ebus_test'
SUBTEST='dma_reg_test'
SUBTEST='dma_func_test'

TEST='ethernet_test'
Using Onboard Transceiver - Link Up.
SUBTEST='my_channel_reset'
SUBTEST='hme_reg_test'
SUBTEST='global_reg1_test'
SUBTEST='global_reg2_test'
SUBTEST='bmac_xif_reg_test'
SUBTEST='bmac_tx_reg_test'
SUBTEST='mif_reg_test'
SUBTEST='mac_internal_loopback_test'
```

```
SUBTEST='10mb_xcvr_loopback_test'
SUBTEST='100mb_phy_loopback_test'
SUBTEST='100mb_twister_loopback_test'

TEST='keyboard_test'
SUBTEST='internal_loopback'

TEST='mouse_test'
'Loopback Test not run.  External loopback required.'

TEST='floppy_test'
SUBTEST='floppy_id0_read_test'

TEST='parallel_port_test'
SUBTEST='dma_read'

TEST='uarta_test'
'UART A in use as console - Test not run.'

TEST='uartb_test'
BAUDRATE='1200'
SUBTEST='internal_loopback'
BAUDRATE='1800'
SUBTEST='internal_loopback'
BAUDRATE='2400'
SUBTEST='internal_loopback'
BAUDRATE='4800'
SUBTEST='internal_loopback'
BAUDRATE='9600'
SUBTEST='internal_loopback'
BAUDRATE='19200'
SUBTEST='internal_loopback'
BAUDRATE='38400'
SUBTEST='internal_loopback'
BAUDRATE='57600'
SUBTEST='internal_loopback'
BAUDRATE='76800'
SUBTEST='internal_loopback'
BAUDRATE='115200'
SUBTEST='internal_loopback'
BAUDRATE='153600'
SUBTEST='internal_loopback'
BAUDRATE='230400'
SUBTEST='internal_loopback'
BAUDRATE='307200'
SUBTEST='internal_loopback'
BAUDRATE='460800'
```

```
SUBTEST='internal_loopback'

TEST='nvram_test'
SUBTEST='write/read_patterns'
SUBTEST='write/read_inverted_patterns'

TEST='audio_test'
SUBTEST='cs4231_test'
Codec_ID='8a'
Version_ID='a0'
SUBTEST='external_lpbk'

###OBDIAG_MFG_START###
TEST='audio_test'
STATUS='FAILED'
SUBTEST='external_lpbk'
ERRORS='1 '
TTF='155 '
SPEED='440.00 MHz'
PASSES='1 '
MESSAGE='Error: External Audio Test not run: Please set the mfg-
mode to sys-ext.'

TEST='ide_test'
SUBTEST='probe-cmd-device'
SUBTEST='hd-and-cd-check'

TEST='video_test'
Please use console other than monitor such as ttya/ttyb to run
this test
It will change the screen you are using
Test not started

Enter (0-13 tests, 14 -Quit, 15 -Menu) ===> 16<CR>
Enter (0-13 tests, 14 -Quit, 15 -Menu) ===> 14<CR>
ok
```

"16" toggles the debug messages back off and "14" exits obdiag.

NOTE

If the normal keyboard was disconnected and this is being executed from a laptop (or other serial console device), the mouse test will fail and the video test will now start as shown here:

```
TEST='mouse_test'
SUBTEST='mouse_loopback'
```

```
###OBDIAG_MFG_START###
TEST='mouse_test'
STATUS='FAILED'
SUBTEST='mouse_loopback'
ERRORS='1 '
TTF='138 '
SPEED='440.00 MHz'
PASSES='1 '
MESSAGE='Error: Timeout receiving a character'

TEST='video_test'
SUBTEST='mach64-chip-id-vendor-id-check'
Mach64Pro on Darwin+ motherboard
SUBTEST='video-frame-buffer-test'
SUBTEST='mach64-walk-one-test'
SUBTEST='mach64-walk-zero-test'
```

If the normal keyboard was disconnected, reconnect it at this time. Enter **set–defaults<CR>** at the ok prompt to set the boot PROM parameters back to default values. Then enter **reset–all<CR>** at the ok prompt to boot the system (assuming it can boot).

4.8.3 PTI MPS800 COMMUNICATION SERVER LOOPBACK TESTS.

Loopback tests can be run between any two “paired” serial modem ports off any of the three Communication Servers. The RPG applications software must be shutdown. Shutdown the software using the procedures found in Table 4–41. Paragraph 4.8.3.1 provides information concerning connection of the loopback cables. Paragraph 4.8.3.2 provides an example of executing the tests.

NOTE

This section will discuss these diagnostics in their entirety as an all–encompassing reference. However, when diagnostics are needed for specific fault isolation requirements (Section 6–3), detailed procedures are provided in that section.

4.8.3.1 Connection of Loopback Cable(s). At least one RS530/232 NULL loopback cable (2210042–206) is provided with each system. To run a loopback test, connect the cable between two "paired" ports (e.g., 0 and 1, 2 and 3, 4 and 5, or 6 and 7). The loopback cable can be connected either directly at the Comm Server ports or at the end of the DTE cables normally connected at the modems. This type of loopback test provides a good method for eliminating the system Comm Server–to–modem cable as a possible fault candidate. If a three–headed loopback cable is available (2200101–201), the loopback tests can be executed using an external clock source with two of the test cable connectors at the ends of the DTE cables and the third connector at the external clock source device (modem, or possibly the 232/422 converter in NWS systems). If external clocking will be used and a dedicated modem is supplying the clock, see Note 6 on flowchart Figure 6–2, sheet 21. Clock instability can occur if the dedicated modem supplying the clock for the test is not physically connected to another modem.

Table 4–91 provides the cross–reference for mapping the ports from the three comm servers to the actual applications software line numbers. Use this table as necessary to determine which port(s) to test based on a possible applications–level failed line number. See Table 7–2 in Section 7.3 to determine DTE cable numbers associated with specific communication server ports.

Table 4–91. Communication Server Logical Link Mapping

Comm Server	Port Number	Applications Line Number
A	0	1
A	1	2
A	2	3
A	3	4
A	4	5
A	5	N/A
A	6	N/A
A	7	N/A
B	0	9
B	1	10
B	2	11
B	3	12
B	4	13
B	5	14
B	6	15
B	7	16
C	0	17

Table 4–91. Communication Server Logical Link Mapping – Continued

Comm Server	Port Number	Applications Line Number
C	1	18
C	2	19
C	3	20
C	4	N/A
C	5	N/A
C	6	N/A
C	7	N/A

4.8.3.2 Example Execution of Communication Server Loopback Tests. The following steps will provide an example of running a loopback test between ports 2 and 3 of Comm Server A, in a single channel system, using internal clocking, and the loopback cable is connected at the end of the DTE cables (normally connected to the modems). This must be run from the RPG processor. See fault isolation flowchart Note 57 in Section 6–3 for the generic instructions for running a loopback test in any given situation.

Step	Operator Action	System Response/Comments
1	Shutdown the RPG applications software at the RPG workstation using the RPG HCI's `RPG Control` functionality, or by entering: **stop<CR>** at a terminal window user prompt.	Applications software stops. If an RPG HCI is open, the RPG's state changes to "SHUTDOWN".
2	At a terminal window user prompt, reboot the communications server that requires testing by entering: **commreset mps1a<CR>** (Lines 1 through 8)	Required to purge the box of previous applications control functions. It takes approximately 45 seconds for the box to reload its protocol translation software. Do not proceed with step 4 until the box has fully rebooted. A "ping" can be used to verify that the box has fully rebooted (box will not respond to ping until that time).
3	Disconnect the DTE cables at the rear of both the A and B sides of modem 70/170A14A2 (second dial modem card –– dial modem ports 3 and 4). Connect the two–headed loopback cable (2210042–206) at the end of the two DTE cables disconnected from the modem card.	The two ports being tested must be in the same box.

Step	Operator Action	System Response/Comments
4	At a terminal window normal user prompt, enter: **loopback<CR>** to start the loopback test user function.	This is an application designed to run the loopback tests based on minimal user input.

NOTE

Steps 5 through 8 each address a system load query/prompt and are divided into two parts. The first part of the step provides the query/prompt information and default information (if any) in the RESPONSE/COMMENTS column. The second part of the step provides the specific action/procedure required.

5	`Choose which MPS800 to test:`
	
	`1 1A`
	`2 1B`
	`3 1C`
	`4 2A`
	`5 2B`
	`6 2C`
	
	`Enter Numeric Selection from Above, q to Quit or ? for Help: [?,??,q]:`
		Each box supports eight lines (1 through 8, 9 through 16, and 17 through 24).

	Enter **1<CR>**	Selects box 1A.

6	`Choose which MPS800 port pair to test:`
	
	`1 0&1`
	`2 2&3`
	`3 4&5`
	`4 6&7`
	
	`Enter Numeric Selection from Above, q to Quit or ? for Help: [?,??,q]:`
		The loopback test program is designed to loopback an even numbered port with the next odd numbered port.

	Enter **2<CR>**	Selects ports 2 and 3 to test.

Step	Operator Action	System Response/Comments

7	`Choose external or internal clocking:`
	
	`1 Internal (default 56000 baud)`
	
	`2 External Need special Y cable)`
	
	`Enter Numeric Selection from Above, q to Quit or ? for Help: [?,??,q]:`
		Internal clocking should be used to verify that the box and cables are good. External clocking should be used to verify that the modem clocks are good.

	Enter **1<CR>**	Selects internal clocking.

8	`Note: Cables should be installed on pairs 2 & 3.`
	
	`Are you ready to test?`
	
	`Yes or No [y,n,?,q]`
	
	`Note: If test hangs for a long time do a CONTROL-C to exit.`	

	Enter **y<CR>** to continue.	The system should respond with:
		`Testing...`
		`Link 2 open.`
		`Link 3 open.`
		`Starting File Transfer.`
		`.....`
		
		If the test does appear to hang, then the loopback is probably failing because no data is being transferred at all. If so, reverify the test setup and cables or rerun the test on different ports or a different box to verify good loopback test operability.

Step	Operator Action	System Response/Comments
9	The loopback test will first transfer data from the even numbered port to the odd numbered port, then test again in the opposite direction. When each portion of the loopback test completes, a transfer statistics display will be shown for each of the two ports. Note the transmit and receive frame numbers from each port. Also, note whether any errors were received.	The `Good Transmits` number on one port should equal the `Good Receives` number on the other and no errors should be noted even if the test file transfers successfully. If errors are noted, the loopback test has failed. If no errors are noted and the test file transferred successfully, these two ports are definitely good.

If the test file transfers successfully, the following will also be noted:

```
File Transfer Complete.
SUCCESS: transferred test data successfully between ports 2 and 3.
```

AND

```
File Transfer Complete.
SUCCESS: transferred test data successfully between ports 3 and 2.

**********************Test Summary on mps1a************************
SUCCESS: transferred test data successfully between ports 2 and 3.
SUCCESS: transferred test data successfully between ports 3 and 2.
Finished testing. Statistics are saved in the /tmp/looplog.1016 file.
*********************************************************************
```

Where "*mps1a*" is the Comm Server being tested and the "*1016*" in the `/tmp/looplog.1016` is the system–assigned Process ID (both examples in this case). Since the summary file is placed in the /tmp directory, the file availability is only temporary until the next Sun processor–level reboot.

NOTE

If the loopback test will not run at all, verify the test setup. If the test setup appears OK, attempt a loopback test on a different communications server that appears to be working OK to verify that a loopback test will work correctly from two of its ports. This is also important when using external clocking from a "suspect" device (modem or 232/422 converter). If that test fails, repeat that test once or twice more using a different modem to supply the external clocks; thus, verifying the first device is really defective.

Step	Operator Action	System Response/Comments
10	Reconnect cables for normal operation.	
11	If no other loopback tests are needed, reboot the Comm Server tested by repeating the applicable step 2 “commreset” command. Then, restart the RPG applications software by using the RPG HCI’s RPG Control functionality (Restart All Tasks), or by entering: **start<CR>** at a terminal window user prompt.	Applications software was stopped in step 1.

Section 4.9. Emergency/Recovery Procedures

NOTES

This chapter and its corresponding sections refer to the RPGPCA as UD70. Unless otherwise specified for FAA redundant systems, this information also applies to RPGPCA UD170.

Command entries and mouse selections are shown in this section in **bold** type. Variable names are normally shown with a unique font (e.g., *variable_name*). Within a specified command string that must be entered, the variable placeholders are not bold type; however, all portions of the command that are entered exactly as shown are in bold type. The variable placeholder within the command string must be replaced with a name, address, etc. unique to each system and the user is told how to formulate the entry, or directed to where to find this information. Since the keyboard in use may have either an "Enter" key or a "Return" key, the end of the command line is delineated with a **<CR>**. Unless stated otherwise, each command line shown must be "entered" to be processed. Also, directory names/paths shown outside of a command example are *italicized* for clarity purposes.

This section will discuss some graphical manipulations using a mouse. The word "click" indicates a standard left mouse click. The symbol ▶ is used to indicate subsequent left clicks through sub–menu selections. When a right click or double–click is required, it is specifically indicated.

4.9.1 INTRODUCTION.

If an operating system or other error condition is reported or exists in the RPG, perform the emergency/recovery procedures in this section. This section contains the following emergency/recovery procedures:

- Sun Processor Recovery Procedures
  - Non–fatal recovery procedures
  - Fatal (box dead) recovery procedures
- Component Software Reinitialization (Reboot) Procedures
- Component Power Off/On Reset Procedures
- Narrowband and Wideband Communication Recovery Procedures

NOTE

This section will discuss these recovery procedures in their entirety as an all–encompassing reference. However, when needed for specific fault recovery requirements (Section 6–3), detailed procedures are provided in that section.

4.9.2 SUN PROCESSOR RECOVERY PROCEDURES.

Various failure modes may exist with Sun processors. These could range anywhere from software anomalies to actual total hardware failures. Non–fatal type problems consists of software anomalies and non–failed hardware anomalies which can normally be corrected through some type of reinitialization or power off/on procedure and these type of recovery procedures should always be attempted first. The recovery actions for non–fatal conditions are discussed in paragraph 4.9.2.1. When the Sun processor has totally failed to the point it can not perform its mission (fatal condition), paragraph 4.9.2.2 discusses system–level options that are available for possibly restoring the system to perform its prime mission. Since this totally depends on unique agency level configurations and interfaces, this is discussed at the Agency level (NWS, DoD, and FAA).

4.9.2.1 Sun Processor Recovery (Non–Fatal Condition). This paragraph will discuss the different levels of recovery procedures that could be taken to restore a malfunctioning Sun processor (non–fatal condition ranging from a normal reinitialization (safest) to a power off/on reset (most drastic). These steps should only be initiated when it appears that some type of software corruption has occurred within the processor and it has become unusable or its operations appears to be deteriorating. Take the following steps in order:

1. Normal reinitialization. Perform the procedures in Table 4–78. If it is not possible to do a normal reinitialization, proceed to the next step. If the normal reinitialization was performed and it didn't solve the problem, proceed to step 3.

2. Abnormal reinitialization. Perform the procedures in Table 4–79. If it is not possible to do this reinitialization or if it didn't help the problem, proceed to the next step.

3. Power off/on reset:

   a. If possible, perform the procedures in Table 4–78 through step 3. At the `ok` prompt, enter **power–off<CR>** or simultaneously press the **Shift** and the ⏻ key. This will actually power the system down. To power the system back on, press the Standby button on the front of the processor. Power is restored to the system and the full system initialization will occur. If the specified steps in Table 4–78 can not be completed, proceed to the next step.

   b. If possible, perform step 1 of Table 4–79. At the `ok` prompt, enter **power–off<CR>** or simultaneously press the **Shift** and the ⏻ key. This will actually power the system down. To power the system back on, press the Standby button on the front of the processor. Power is restored to the system and the full system initialization will occur. If the specified steps in Table 4–78 or Table 4–79 can not be completed, proceed to the next step.

c. Cycle the power switch off for five seconds and then back on at the rear of the unit. A full system initialization will occur.

4.9.2.2 Sun Processor Recovery (Fatal Condition). This paragraph discusses what possible "mission recovery" options may be available when a Sun Processor is totally failed (pending receipt of a replacement processor). The BDDS processor will not be discussed since it is considered a non–critical component. For a totally failed MSCF processor, it is important to note that as long as the RPG is functioning, critical mission functionality continues. However, this paragraph will discuss ways to maintain or achieve control of the RPG applications, which is what the MSCF processor is normally used for. On the other hand, if the RPG processor is totally failed, critical mission functionality ceases. A replacement processor should be available from the supply system within 24 hours. However, if severe weather is imminent, this paragraph will give possible options for temporarily achieving RPG functionality on another Sun processor.

1. Totally Failed MSCF Processor:

   a. NWS "Local" MSCF. Since the MSCF workstation is in the same building with the RPGPCA, this is considered a non–relevant problem. Operations personnel can temporarily use the RPG workstation with the RPGPCA cabinets to view/manipulate the MSCF Display and/or the RPG's HCI.

   b. DoD Distant MSCF. If this Distant MSCF is at an NWS office, the office manager may authorize temporary installation of a BDDS Sun processor in place of the MSCF (both are Sun Ultra 5s). This would require that the BDDS processor be reloaded with MSCF software IAW Table 4–54 of Section 4.6. SCSI functionality to the Jaz drive would not be available; however, the "new" MSCF processor could perform its prime mission pending receipt of a replacement processor.

   c. FAA Distant MSCF. Contact the RMS control facility and pass on to them the desired mode of operation. RMS control facility personnel can use the RMS applications level interface to the RPG to control RPG operation (including channel switching).

      If this Distant MSCF is at an NWS office, the office manager may authorize temporary installation of a BDDS Sun processor in place of the MSCF (both are Sun Ultra 5s). This would require that the BDDS processor be reloaded with MSCF software IAW Table 4–54 of Section 4.6. SCSI functionality to the Jaz drive would not be available; however, the "new" MSCF processor could perform its prime mission pending receipt of a replacement processor.

2. Totally Failed RPG Processor:

a. NWS. Since the MSCF workstation is in the same building with the RPGPCA (Local) and is connected within the same LAN network environment via an Ethernet–type connection (100 Mbps), the MSCF processor can be used as an RPG processor in emergency conditions. Completely turn off the non–functioning RPG processor or disconnect cable 70/170W201 from LAN switch port 1. Reload the MSCF processor as the RPG basically using the procedures in Table 4–52 of Section 4.6 (approximately one hour).

b. DoD. Under most circumstances, no temporary replacement processor would be readily available to install in place of the RPG processor. In this case, RPG functionality is lost until an RPG replacement processor is received. Should another Sun Ultra 5 or 10 processor be available temporarily (minimum of 400 MHz processor speed and 4 GB of disk space), the processor may be physically connected in place of the RPG processor but would require a full RPG software load IAW Table 4–52 of Section 4.6 to be functional.

c. FAA. Under most circumstances, no temporary replacement processor would be readily available to install in place of the RPG processor. However, this is not critical to an FAA Redundant system assuming the Redundant channel is functional. Just switch control to the Redundant channel and resume normal operations pending receipt of a replacement processor.

4.9.3 COMPONENT SOFTWARE REINITIALIZATION (REBOOT) PROCEDURES.

This paragraph will discuss software reinitialization (reboot) procedures for RPG components when available. These procedures should always be performed before attempting any procedures contained in paragraph 4.9.4. However, do not perform these procedures unless software corruption has occurred within the component and it has become unusable or its operations appears to be deteriorating.

With the exception of the PTI MPS800 Communication Server, the telnet command is used in conjunction with an address or name (as linked to an address in the /etc/hosts file) to establish a TCP/IP communication path to the components. At that point, the user can login to the component and perform whatever actions are necessary (in this case, a “reboot” or a “reset”). The telnet session can be initiated from an RPG, MSCF, or BDDS terminal window (if a BDDS is installed). If the telnet session can not establish a TCP/IP communication path to the component, then proceed to paragraph 4.9.4. In the case of the PTI MPS800 Communication Server, a unique reinitialization command sequence is used. The following components are discussed:

- Cisco 2924 LAN Switch
- Cisco 3640 Router
- APC MasterSwitch Power Administrator
- Baytech Power Administrators
- PTI MPS800 Communication Server

NOTE

In these procedures, an example is combined into the procedure.

4.9.3.1 Cisco 2924 LAN Switch Reinitialization. Perform the following procedure, starting with the telnet command. In this example, we will telnet to hostname “lan” which has an IP–address of 172.25.169.6. Command entries are shown in bold, responses in non–bold, and comments in parenthesis.

telnet *lan*<CR> (“lan” for single channel systems; “lan1” or “lan2” for FAA Redundant channels.)

```
Trying 172.25.174.6...
Connected to lan.
Escape character is '^]'.
```
WARNING! US Gov system! PL 99–474 prohibits unauthorized access. Violators may be fined or imprisoned. Persons using this system are subject to and consent to having all activities monitored/recorded.

User Access Verification

Password: *password***<CR>** (Site–specific *password*, default is “cisco”.)
lan>**enable<CR>**
Password: *enable_password***<CR>** (Site–specific *enable_password*, default is “cisco”.)
lan#**reload<CR>**
`Proceed with reload? [confirm]` **<CR>** to confirm (LAN Switch reloads and telnet session is terminated.)

4.9.3.2 Cisco 3640 Router Reinitialization. Perform the following procedure, starting with the telnet command. In this example, we will telnet to hostname “rtr” which has an IP–address of 172.15.169.7. Command entries are shown in bold, responses in non–bold, and comments in parentheses.

telnet *rtr*<CR> (“rtr” for single channel systems; “rtr1” or “rtr2” for FAA Redundant channels.)

```
Trying 172.25.174.7...
Connected to rtr.
Escape character is '^]'.
```
WARNING! US Gov system! PL 99–474 prohibits unauthorized access. Violators may be fined or imprisoned. Persons using this system are subject to and consent to having all activities monitored/recorded.

User Access Verification

Password: *password***<CR>** (Site–specific *password*, default is “cisco”.)
rtr>**enable<CR>**
Password: *enable_password***<CR>** (Site–specific *enable_password*, default is “cisco”.)

rtr#**reload<CR>**
`Proceed with reload? [confirm]` **<CR>** (Router reloads and telnet session is terminated.)

4.9.3.3 APC MasterSwitch Power Administrator Reinitialization. Perform the following procedure, starting with the telnet command. In this example, we will telnet to hostname "pwradm" which has an IP–address of 172.15.169.3. Command entries are shown in bold, responses in non–bold, and comments in parenthesis.

telnet pwradm<CR> ("pwradm" for single channel systems; "pwradm1" or "pwradm2" for FAA Redundant channels.)

```
Trying 172.15.169.3...
Connected to pwradm.
Escape character is '^]'.
```

User Name : **apc<CR>**
Password : ***password*<CR>** (Site–specific *password*, default is "apc".)

American Power Conversion Web/SNMP Management Card AOS v2.5.3
(c) Copyright 2000 All Rights Reserved MasterSwitch APP v2.0.2
––––––

6− About System

?− Help, <ESC>− Back, <ENTER>− Refresh
> **5<CR>**

−−−−−−− Tools −−−−−−−

2)...Manage Users
3)...Configuration
4)...Unit Status
5)...Reset Unit
6)...Logout

Enter Selection> **5<CR>**

`Reset System? (Y/N)>` **y<CR>** (Baytech power administrator resets and telnet session is terminated.)

4.9.3.5 PTI MPS800 Communication Server Reinitialization. The "commreset" command is used to reinitialize the communications servers. Any of the three communication servers can be reset in the following manner (single channel systems and FAA Redundant Channel 1):

- UD70/170A15 Comm Server A: **commreset mps1a<CR>**
- UD70/170A16 Comm Server B: **commreset mps1b<CR>**
- UD70/170A17 Comm Server C: **commreset mps1c<CR>**

If this FAA Redundant Channel 2, use the following commands:

- UD70A15 Comm Server A: **commreset mps2a<CR>**
- UD70A16 Comm Server B: **commreset mps2b<CR>**
- UD70A17 Comm Server C: **commreset mps2c<CR>**

If the reset command is actually accepted, there is no feedback and the system returns to a prompt. It will take approximately 45 seconds for a server to completely reinitialize and load its applications files. If an error message is received or the system will not return to a prompt, the reset command was not accepted and the box requires a power off/on reboot (paragraph 4.9.4 below).

4.9.4 COMPONENT POWER OFF/ON RESET PROCEDURES.

This paragraph will discuss power off/on reset procedures for RPG components using the MasterSwitch power administrator. Only the critical components are controlled with the power administrator. Logical reboot procedures (soft reboots) contained in paragraph 4.9.3 should always be performed first before attempting any procedures in this section (hard reboots). As with paragraph 4.9.3, these procedures would only be performed if software corruption has occurred within the component and it has become unusable or its operations appears to be deteriorating.

Control of the MasterSwitch can be accomplished in three ways. Paragraph 4.9.4.1 discusses an example procedure using the graphics–based MSCF Display Power Control function at the MSCF workstation. This is the preferred method. The MSCF Display is normally displayed on the MSCF workstation but can also be used at the RPG workstation. Paragraph 4.9.4.2 discusses an example procedure using a text–based telnet session. Should LAN problems exist but the MSCF link is still up to the router, paragraph 4.9.4.3 discusses use of the out–of–bandwidth serial connection to the MasterSwitch. In all cases, the power outlets controlled by the MasterSwitch will be specified in the same order and will have the same short name as follows (long name shown in parenthesis):

- Outlet 1. RPG (Sun Ultra 10 RPG processor)
- Outlet 2. LAN (Cisco 2924 LAN switch)
- Outlet 3. Router (Cisco 3640 Router)
- Outlet 4. Comm Server A (PTI MPS800 communication server)
- Outlet 5. RDA/RPG Gateway (Polycom protocol translator)
- Outlet 6. BDDS (Sun Ultra 5 Base Data Distribution Server), NWS and DoD only
- Outlet 7. Comm Server B (PTI MPS800 communication server)
- Outlet 8. Comm Server C (PTI MPS800 communication server)

4.9.4.1 MasterSwitch Power Administrator Power Control Using the MSCF Power Control Window. The MasterSwitch is normally controlled using the Power Control window which can be activated from the Master System Control Functions screen. The actual Master System Control Functions screen is started automatically at the MSCF workstation when a user logs into the CDE; however, that display can also be started on an RPG workstation monitor. The procedure to control a power outlet would be identical for all eight outlets listed in paragraph 4.9.4. The following steps depict the normal sequence for controlling a MasterSwitch power outlet using the Power Control window.

1. If a Master System Control Functions screen is not already present, then at a command line (RPG or MSCF workstation), enter **mscf &<CR>**. An MSCF display should appear as depicted in Figure 4–74
2. Click the **Power Control** button. The following screen appears:
3. Click on the desired outlet to highlight it.
4. Click either **Turn Off**, **Turn On**, or **Reboot** as desired. If this is being done to perform a “hard reset” of a device, use **Reboot** which will power the device off for five seconds and then power it back on.

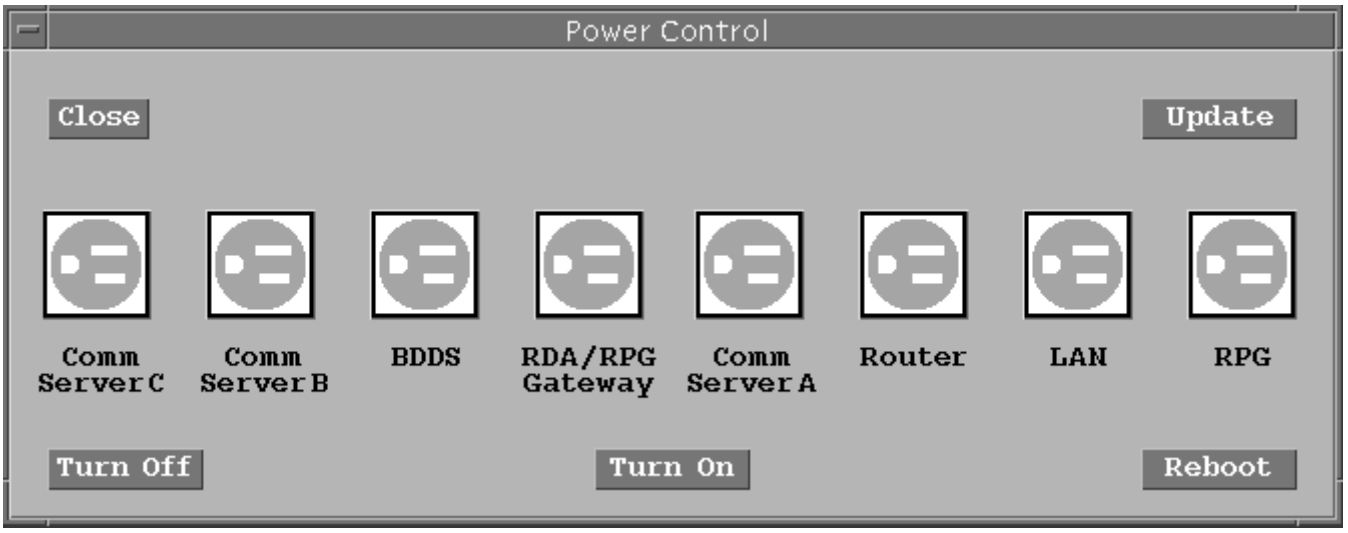

Figure 4–78. MSCF Power Control Window

NOTES

For FAA systems, “BDDS” would just indicate “Outlet 6” (or nothing) since a BDDS is not installed within the RPGPCA cabinets for FAA systems.

“Turn Off” and “Turn On” are disabled for the LAN and Router outlets. Turning these outlets off from the MSCF workstation would be suicidal since this would force a lost connection to the RPG LAN and subsequently to the power administrator. If “Turn Off” is performed on a Sun processor (RPG or BDDS), this functionality will attempt to logically shut down the Sun processor before actually turning the power off.

5. When prompted, click **Yes** to continue (if desired) or click **No** to abort the action.

4.9.4.2 MasterSwitch Power Administrator Power Control Using telnet. The MasterSwitch power administrator can be controlled through use of a telnet text–based session. The telnet command is used in conjunction with an address or name (as linked to an address in the /etc/hosts file) to establish a TCP/IP communication path to the component. At that point, the user can login to the MasterSwitch and perform whatever actions are necessary (in this case, a power off/on reset). The telnet session can be initiated from the RPG, the MSCF, or the BDDS if installed.

Since the procedure would be identical for all eight outlets listed above (except for selection of the outlet number), this procedure will only show an example of one of the outlets. In this case, control of outlet 3 (the router) is shown. The MasterSwitch shown in this example has a name of “pwradm” and an address of 172.15.169.3.

NOTES

This example is designed around using the power controller to reboot a specific device. The power administrator can also be used to just power off and power on a device. However, the LAN and Router should never just be powered off in this manner because the actual ethernet connection to the power administrator could be lost (through LAN and also through Router if being performed from the MSCF workstation). Also, no power control of this type should be used for Sun processors except as a last resort. If at all possible, it is always desirable to logically shut down a Sun processor before it is powered off.

In this procedure, an example is combined into the procedure. Example command entries are shown in bold, responses in non–bold, and comments in parenthesis. In the following example for DoD or FAA systems, “BDDS” would just indicate “Outlet 6” since a BDDS is not installed within the RPGPCA cabinets for DoD systems.

Example:

telnet pwradm<CR> (“pwradm” for single channel systems; “pwradm1” or “pwradm2” for FAA Redundant channels.)

```
Trying 172.15.169.3...
Connected to pwradm.
Escape character is '^]'.
```

User Name : **apc<CR>**
Password : ***password*<CR>** (Site–specific *password*, default is “apc”.)

```
American Power Conversion          Web/SNMP Management Card AOS    v2.5.3
(c) Copyright 2000 All Rights Reserved  MasterSwitch APP           v2.0.2
-------------------------------------------------------------------------------
Name     : pwradm                Date    : 07/16/1998
Contact  : Unknown               Time    : 08:31:39
Location : Unknown               Up Time : 0 Days 0 Hours 0 Minutes
Status   : P+ N+ A+              User    : Administrator

MasterSwitch : Serial Communication Established

------- Control Console -------------------------------------------------------

   1– Device Manager
```

```
   2– Network
   3– System
   4– Logout

   ?– Help, <ESC>– Main Menu, <ENTER>– Refresh

> 1<CR>    (To select the Device Manager.)

------- Device Manager ----------------------------------------------------------

   1– RPG                    ON
   2– LAN                    ON
   3– Router                 ON
   4– Comm Server A          ON
   5– RDA/RPG Gateway        ON
   6– BDDS                   ON
   7– Comm Server B          ON
   8– Comm Server C          ON
   9– Master Control/Config

   <ESC>– Back, <ENTER>– Refresh
> 3<CR>    (To select outlet 3.)

------- Router ------------------------------------------------------------------

      Name : Router
      State: ON

   1– Control Outlet 3
   2– Configure Outlet 3

   ?– Help, <ESC>– Back, <ENTER>– Refresh
>1<CR>    (To select control of outlet 3.)

------- Control Outlet 3 --------------------------------------------------------

      Name : Router
      State: ON

   1– Immediate On
   2– Immediate Off
   3– Immediate Reboot
   4– Delayed On
   5– Delayed Off
   6– Delayed Reboot
```

7− Cancel

?− Help, <ESC>− Back, <ENTER>− Refresh
> **3<CR>** (To reboot outlet 3.)

−−−

5– Delayed Off
6– Delayed Reboot
7– Cancel

?– Help, <ESC>– Back, <ENTER>– Refresh

>**<ESC>** (To return to previous menu.)

–––––––– Router ––

Name : Router
State: ON

1– Control Outlet 3
2– Configure Outlet 3

?– Help, <ESC>– Back, <ENTER>– Refresh
> **<ESC>** (To return to previous menu.)

–––––––– Device Manager ––

1– RPG	ON
2– LAN	ON
3– Router	ON
4– Comm Server A	ON
5– RDA/RPG Gateway	ON
6– BDDS	ON
7– Comm Server B	ON
8– Comm Server C	ON
9– Master Control/Config	

<ESC>– Back, <ENTER>– Refresh

> **<ESC>** (To return to previous menu.)

–––––––– Control Console ––

1– Device Manager
2– Network
3– System
4– Logout

?– Help, <ESC>– Main Menu, <ENTER>– Refresh
> **4<CR>** (To logout of the MasterSwitch.)
Connection closed by foreign host.

4.9.4.3 MasterSwitch Power Administrator Power Control Using Out–Of–Bandwidth telnet. If at the MSCF workstation and it doesn't appear that normal ethernet connectivity exists to the power administrator or other LAN devices (except the router), there may be a problem with the RPG LAN. This would be evident by the following symptoms:

1. Telnet sessions to the MasterSwitch power administrator (paragraph 4.9.4.2) or any other LAN devices except the router do not work from the MSCF workstation (see paragraph 4.9.3.2 to test router connection).
2. The outlets are not present in the Power Control window of the MSCF Display (paragraph 4.9.4.1).
3. There is no LAN Switch status displayed when selected as part of "Comms Status" from the MSCF Display.

If this is the case, there still may be possible recovery actions available from the MSCF workstation by using the out–of–bandwidth connection to the MasterSwitch power administrator. At an MSCF workstation terminal window, enter **telnet rtr 2129<CR>** If this is an FAA Redundant system and Channel 2 was the last Active channel, then enter **telnet rtr2 2129<CR>**. If the out–of–bandwidth connection actually completes to the power administrator, two or three feedback lines will be noted. At this point, enter the site–specific RPGPCA Router (70/170A2) AUX port password as established by paragraph 6.6.5.3 step 13.m., enter one additional **<CR>**, and then follow the procedures in paragraph 4.9.4.2 (starting with the `User Name:` prompt) for logging in and controlling the power outlets. At this point, the LAN should be rebooted first and then the router should be rebooted to see if full LAN and ethernet functionality can be restored. When the procedures in paragraph 4.9.4.2 are completed, end the telnet session by entering **Ctrl** and **]** simultaneously and then enter **quit<CR>** at the `telnet>` prompt.

4.9.5 COMMUNICATION RECOVERY PROCEDURES.

Communication errors, task pausing, or other conditions may result in narrowband and/or wideband line failures. To restore the system to normal operation, perform the procedure in either paragraph 4.9.5.1 (for narrowband failure) or paragraph 4.9.5.2 (for wideband failure).

4.9.5.1 Narrowband Recovery Procedure. The following procedure should be performed when narrowband line disconnects or failure conditions exist and to restore communications to the PUP and other users. Perform step 1. to attempt recovery of a single disconnected or failed link. Perform step 2. to attempt recovery from multiple link failures.

1. Recovery for single link failure/disconnect.
   a. At MSCF RPG HCI, click on the green link between the RPG block and the USERS block.
   b. In the `Product Distribution Lines` window of the `Product Distribution Comms Status` screen, double–click on the disconnected or failed line.
   c. Click **Reset**, when prompted click **Yes** to confirm.

NOTE

If line is restored to normal operation, continue with operations. If line failed to connect, continue with step d.

d. Check telecommunications link and/or notify end user to check their equipment and telecommunications link.

2. Recovery for multiple link failures.

a. If the links are failed in groups of eight (i.e., 1–8, 9–16, or 17–24), then use the reinitialization procedure specified in paragraph 4.9.3.5 to reboot Comm Server A for lines 1–8, Comm Server B for lines 9–16, or Comm Server C for lines 17–24. Wait approximately two minutes. If the links did not recover, perform the next step.

b. At the `MSCF Master System Control Functions` screen, click **Power Control** (assumes screen is already unlocked), In the `Power Control` screen, click on the "Comm Server A", "Comm Server B", or "Comm Server C" outlet as appropriate, then click **Reboot**. When prompted click **Yes** to continue with the reboot. Wait approximately two minutes. If the links do not recover, perform the next step.

c. At the MSCF RPG HCI, click the **Control** button in the RPG block and then click **All Tasks** (under `Restart`), when prompted click **Yes** to confirm. Wait approximately two minutes. If the links do not recover, refer to troubleshooting flowcharts.

4.9.5.2 Wideband Recovery Procedure. The wideband recovery procedure consists of disconnecting/reconnecting the line to the RDA, rebooting the RDA/RPG Gateway, restarting the RPG applications software, and RDA recovery actions if remote access is available.

1. At MSCF RPG HCI, click on the wideband link area between the RDA block and the RPG block.

2. In the `Wideband Status/Control` block, click **Disconnect** and **Yes** when prompted to continue.

3. Click **Connect** and then **Yes** when prompted to continue. If the link does not recover, continue with the next step to reboot the RDA/RPG Gateway.

4. At the `MSCF Master System Control Functions` screen, click **Power Control** (assumes screen is already unlocked), In the `Power Control` screen, click on the **RDA/RPG Gateway** outlet, then click **Reboot**. When prompted click **Yes** to continue with the reboot. Wait approximately one minute. If the link does not recover, perform the next step to restart the RPG applications software.

5. At the MSCF RPG HCI, click the **Control** button in the RPG block and then click **All Tasks** (under `Restart`). When prompted click **Yes** to confirm. Wait approximately two minutes. If the link still does not recover and remote RDA access is available (to the RDA's RRRAT), then perform the next step. If remote RDA access is not available, contact maintenance for further fault analysis.

6. Establish a remote session to the RDA's RRRAT (PCAnywhere) or go to RDA. Terminate the RDA's application software (**TERP<Tab>***password***<CR>**) and then bring it back up from the system console (**RDAUP<CR>**). If that doesn't help, terminate the RDA's application software, mark its disk off, go to the RDADP's Control Diagnostic System (CDS), and enter **init<CR>** to reinitialize the RDA processor.

CHAPTER 5

THEORY OF OPERATION

Section 5.1. Introduction

NOTE

This chapter and its corresponding sections refer to the RPGPCA as UD70. Unless otherwise specified for FAA redundant systems, this information also applies to RPGPCA UD170.

5.1.1 INTRODUCTION.

This chapter provides a description of the RPG functions. These functional descriptions are provided in nine sections:

5.1.1.1 Simplified Functional Description – Section 5.2. This section introduces and discusses the major functional areas as well as their subfunctions and interrelationships.

5.1.1.2 LAN Switch – Section 5.3. This section discusses the RPG LAN in terms of its significant data flow. It also discusses remote LAN access for the Distant MSCF and power administration devices.

5.1.1.3 Product Generation Processor – Section 5.4. This section discusses the processor subfunctions in terms of its LRU and significant data flow.

5.1.1.4 RDA/RPG Gateway and Communications Server – Section 5.5. This section discusses the RDA/RPG gateway and the communications server interface in terms of their LRUs and significant data flow. It discusses the RDA to RPG wideband functionality (gateway) as well as the interface between the RPG and the Narrowband Communications functionality.

5.1.1.5 Narrowband Communications – Section 5.6. This section discusses the narrowband communication subfunctions in terms of its LRUs and significant data flow.

5.1.1.6 Relay Box – Section 5.7. This section discusses the Relay Box in terms of its LRUs and significant data flow. The Relay Box is present only in FAA redundant systems.

5.1.1.7 BDDS – Section 5.8. This section discusses the BDDS in terms of its LRUs and significant data flow.

5.1.1.8 MSCF – Section 5.9. This section discusses the MSCF subfunctions in terms of its LRUs and significant data flow.

5.1.1.9 Remote RDA Maintenance Terminal – Section 5.10. This section discusses the Remote RDA Maintenance Terminal in terms of its LRUs and significant data flow. The Remote RDA Maintenance Terminal is present only in NWS redundant systems.

5.1.1.10 Power Distribution – Section 5.11. This section discusses the power distribution for the RPG Processor/Communications Assembly (UD70) as well as the MSCF (UD71).

Section 5.2. RPG Simplified Block Diagrams Description

NOTE

This chapter and its corresponding sections refer to the RPGPCA as UD70. Unless otherwise specified for FAA redundant systems, this information also applies to RPGPCA UD170.

5.2.1 MAJOR FUNCTIONS.

The RPG Group consists of six major functions as follows:

5.2.1.1 LAN. The LAN provides the ethernet TCP/IP network "backbone" for the system. Most all RPG components communicate with each other using TCP/IP and the LAN provides the central interconnectivity point for these devices. The LAN also performs a communications function as described in paragraph 5.2.1.4.

5.2.1.2 Power Administration. For most all of the RPG equipment, the quality of the power is critical to continuous, uninterrupted operation. For this reason, critical RPG components are powered from an UPS. In some cases, individualized control of the power to a device is necessary to either control its turn on sequence or to allow for a remote power off/on "reset" of the device. This is accomplished by unique power administrators.

5.2.1.3 Processing. The RPG processor function provides product generation as well as local storage, distribution control, and archiving of selected products and derived data. It controls the RDA operating modes and monitoring of the operational status of the overall WSR–88D system. It provides the graphical Human Computer Interface for system control and monitoring. It also provides a retransmission of the wideband data (bcast) to the BDDS.

5.2.1.4 Communications. The communications function consists of both wideband and narrowband communications functions. The wideband communications function receives the data from the RDA, performs protocol translation (via gateway) and sends it on to the RPG processor. The products distribution communications function receives the selected weather/derived products, alarms, messages, and data requests for distribution from the processor and sends them to either the router or the appropriate X.25 communications server.

5.2.1.5 BDDS Processor. The BDDS receives a retransmission of the wideband data (bcast) from the RPG processor and converts it to a unique, secure format for retransmission to the optional BDDS users.

5.2.1.6 MSCF. The MSCF is the man/machine interface that allows the user to interact with the RPG (and the future Open Systems RDA) Processor operating systems, application graphics, and maintenance programs. It provides control over the RPG applications processing functions by permitting the selection of products to be routinely generated and a product subset to be archived. It also provides the interface to access the operating system, initialize the RPG processor, and perform first level analysis of system malfunctions.

5.2.2 RPG SIMPLIFIED FUNCTIONAL FLOW DIAGRAMS.

Since the RPG configurations vary based on the original design which was "agency–unique", the functional flow for these systems also vary to some degree and each of the three basic configurations are discussed separately. Figure FO5–1 depicts functional flow for an NWS RPG. Figure FO5–2 depicts functional flow for a DoD RPG. Figure FO5–3 depicts functional flow for a FAA redundant RPGs.

5.2.2.1 RPG Simplified Functional Flow Diagram (NWS). Figure FO5–1 depicts functional flow for a NWS RPG. Each major function/subfunction is discussed as it relates to system level functionality.

1. LAN. The LAN switch (zones 4A, 4B) provides the ethernet TCP/IP network "backbone" for the RPG. Each LAN capable device in the system is interconnected via the LAN switch which provides 10/100 Mbit/sec full–duplex (if needed) TCP/IP communications between all components on the RPG LAN. A portion of the physical LAN switch is logically partitioned off into a Virtual LAN (VLAN). This VLAN will receive a uniquely formatted distribution of the wideband data from VLAN segregates this data from the other the BDDS and distribute it to BDDS users. The BDDS VLAN segregates this data from the other RPG LAN traffic for security purposes.

   The router (zone 3B) provides external access to the RPG LAN. The router is also used to provide a bridge between the MSCF and the RPG LAN. While the MSCF ethernet link could have been connected into the LAN switch, the router is used primarily to maintain continuity across user agency systems and for implementing security controls. This concept also provides a path from the MSCF to the power administrator independent of the LAN in case of LAN problems. For the NWS system, the router provides the LAN–to–LAN associated user interface to the external AWIPS system.

2. Wideband Communication. T1 DSX–1 (analog) wideband data enters from the RDA (reference WBC Group, NWS EHB 6–545). This data passes through the CSU and is then fed to the RDA/RPG Gateway (zone 3A). The gateway has a built–in CSU/DSU which converts the data from an analog to digital format and then performs the protocol translation to TCP/IP. The RDA wideband data (now TCP/IP) is then fed through the LAN to the RPG processor (zone 2B).

3. RPG Processor.

   a. The RPG processor (zone 2B) receives the following data from the RDA:

      - RDA status data
      - Digital radar base data
      - RDA performance/maintenance data
      - Console messages

- Loop back test
- Clutter filter bypass map

b. The processor stores this data in shared memory until it is accessed and transferred. The processing equipment transfers the data from shared memory, processes the base data, and converts it into weather and derived products. These products are returned to shared memory where they are accessed and distributed to mass storage. Selected subsets of the products are routinely archived (external SCSI device). The processor responds to requests from associated users and non–associated users, (zone 1A). The RPG processor also transmits the following data to the RDA:

- RDA control commands
- Volume coverage patterns
- Clutter censor zones
- Requests for data
- Loop back tests
- Edited clutter filter bypass map
- Console messages

c. The RPG processor also performs the following functions:

- Ingests fault alarms from the MLOS system for sites that use a direct MLOS feed for the wideband data.
- Provides a retransmission of the wideband data (bcast) in TCP/IP format to the BDDS (zone 1B).
- As part of the RPG applications functionality, provides the graphical unit control display via a TCP/IP interface to the MSCF processor (zone 2A).
- Through TCP/IP paths, provides either RPG applications–based or separate text–based/ graphical control of the UPS or power administrator (zone 3A).

4. Power Administration. The UPS and the power administrator (zone 3A) are part of the power administration function. While the details of the actual AC power distribution is discussed in Section 5.11, it should be noted that each of these devices has a TCP/IP path to both the RPG processor and the MSCF. For the UPS, this allows for either a text–based or a graphical control and monitoring interface that can be set to automatically shut down the RPG processor in the event of an extended power failure.

For the power administrator, the TCP/IP link allows for either a text–based or a graphical control and monitoring interface that can be used to individually turn off or turn on the AC power for selected RPG devices. This allows for a remote power reboot of these devices. In case of LAN problems or when TCP/IP communications may be lost, an "out–of–bandwidth" serial, text–based–only control interface is provided from the AUX port on the router directly to the serial port on the power administrator.

5. Narrowband Communications Processing. The narrowband communications processing function interfaces the RPG processor to associated and non–associated users via modem–based telephone links. The narrowband communications area (zone 2A) is comprised of analog modems or modem–type devices for forwarding the product distributions to the associated (dedicated lines) and non–associated users (dial lines). One 56 Kbit/sec "high speed" link is provided. There are two primary interface points to the narrowband communications processing function. These are the communication servers and the router serial card interfaces.

   a. The three communication servers (zone 3A) receive the product distributions from the RPG processor over TCP/IP links through the LAN switch (a separate TCP/IP link for each server). The communication servers perform protocol translation from TCP/IP to RS–232 serial data for interconnection to the analog–type modem devices which comprise the remainder of the narrowband communications processing function. The communication servers feed each modem with a separate serial line and each server provides up to eight serial links.

   b. The router (zone 3B) receives product distributions from the RPG processor over a TCP/IP link through the LAN switch. The product data is routed to the appropriate serial data line for continued distribution to the end user connected through the narrowband communications area.

6. BDDS. The BDDS (zone 1B) receives a TCP/IP retransmission of the wideband data (bcast) from the RPG processor. The BDDS is a separate processor which acts as a server of base data for the BDDS users. The base data is reprocessed into a unique format, fed out a TCP/IP link, and placed onto the LAN switch in a "partitioned" Virtual LAN segment of the switch (zone 4B). The VLAN segregates the BDDS TCP/IP data from the normal LAN data for security purposes. BDDS users (four maximum) establish their own links to the remaining VLAN ports. BDDS users must run unique client software to "read" the BDDS–formatted wideband data in from the BDDS server functionality.

7. MSCF. The MSCF (zone 2A) is the man/machine interface that allows the user to interact with the RPG (and the future Open Systems RDA) processor operating system, application graphics, and maintenance programs. The MSCF is a separate processor that allows for processing segregation of this graphical control from the RPG or future RDA processors. The applications functionality specifically designed to provide the graphical control interface to the RPG processor is called the Human Computer Interface. Use of the RPG's HCI is discussed in Section 4.7.

The MSCF is normally collocated with the associated user workstation (e.g., a AWIPS) that supports editing of the RCM function. As a result, it may be located locally with, or "distant" from the RPG processor. For NWS systems, it is considered to be local to the RPG and has a TCP/IP path to the router which then provides access to the RPG processor (through LAN switch). As mentioned under power administration, control of the power administrator is provided by a separate serial connection between the router and the power administrator. A separate TCP/IP link is connected between the RPG's LAN switch and the MSCF printer.

8. Remote RDA Maintenance Terminal. For NWS redundant systems, a remote RDA maintenance terminal (zone 1A) provides the man/machine interface that allows the user to interact with the RPG processor operating system, application and maintenance programs, and the CDS. This is not actually part of the RPG; however, it is discussed as part of the RPG since the terminal is normally either located near the RPG cabinets or the MSCF. The remote RDA maintenance terminal connects to the Channel 1 RDA, UD105, through a dial line. The terminal contains a dial port modem and STATMUX to transmit/receive and multiplex/demultiplex the application– and system–port lines of both Channels 1 and 2. It also contains a Dual A/B switch used to select which channel is connected to the Remote RDA/RPG Remote Access Terminal (RRRAT) UD32A10.

5.2.2.2 RPG Simplified Functional Flow Diagram (DoD). Figure FO5–2 depicts functional flow for a DoD RPG. Each major function/subfunction is discussed as it relates to system level functionality.

1. LAN. The LAN switch (zones 4A, 4B) provides the ethernet TCP/IP network "backbone" for the RPG. Each LAN capable device in the system is interconnected via the LAN switch which provides 10/100 Mbit/sec full–duplex (if needed) TCP/IP communications between all components on the RPG LAN. A portion of the physical LAN switch is logically partitioned off into a Virtual LAN (VLAN). This VLAN will receive a uniquely formatted distribution of the wideband data from VLAN segregates this data from the other the BDDS and distribute it to BDDS users. The BDDS VLAN segregates this data from the other RPG LAN traffic for security purposes.

   The router (zone 3B) provides external access to the RPG LAN. For the DoD system, this router has a serial asynchronous PPP RS–232 modem link connected to a dedicated modem in the modem rack (zone 2A) for the distant MSCF. If frame relay service is used, the router has a TCP/IP DSU/CSU module for communication to the Frame Relay Hub Router UD75 DSU/CSU. In either case, this allows the distant MSCF to access both the RPG LAN through the router and the power administrator through a separate serial link between the router and the power administrator. The distant MSCF is connected via a LAN bridge, and all LAN capable devices of the distant MSCF are considered a part of the extended RPG LAN.

2. Wideband Communication. T1 DSX–1 (analog) wideband data enters from the RDA (reference WBC Group, NWS EHB 6–545). This data is fed to the RDA/RPG Gateway (zone 4A). The gateway has a built–in CSU/DSU which converts the data from an analog to digital format and then performs the protocol translation to TCP/IP. The RDA wideband data (now TCP/IP) is then fed through the LAN to the RPG processor (zone 2B).

3. RPG Processor:

   a. The RPG processor (zone 2B) receives the following data from the RDA:

      - RDA status data
      - Digital radar base data
      - RDA performance/maintenance data
      - Console messages
      - Loop back test
      - Clutter filter bypass map

   b. The processor stores this data in shared memory until it is accessed and transferred. The processing equipment transfers the data from shared memory, processes the base data, and converts it into weather and derived products. These products are returned to shared memory where they are accessed and distributed to mass storage. Selected subsets of the products are routinely archived (external SCSI device). The processor responds to requests from associated users and non–associated users, (zone 1A). The RPG processor also transmits the following data to the RDA:

      - RDA control commands
      - Volume coverage patterns
      - Clutter censor zones
      - Requests for data
      - Loop back tests
      - Edited clutter filter bypass map
      - Console messages

   c. The RPG processor also performs the following functions:

      - Provides a retransmission of the wideband data (bcast) in TCP/IP format to the BDDS (zone 1B).
      - As part of the RPG applications functionality, provides the graphical unit control display via a TCP/IP interface to the MSCF processor (zone 1A).

- Through TCP/IP paths, provides either RPG applications–based or separate text–based/ graphical control of the UPS or power administrator (zone 3A).

4. Power Administration. The UPS and the power administrator (zone 3A) are part of the power administration function. While the details of the actual AC power distribution is discussed in Section 5.11, it should be noted that each of these devices has a TCP/IP path to both the RPG processor and the MSCF. For the UPS, this allows for either a text–based or a graphical control and monitoring interface that can be set to automatically shut down the RPG processor in the event of an extended power failure.

   For the power administrator, the TCP/IP link allows for either a text–based or a graphical control and monitoring interface that can be used to individually turn off or turn on the AC power for selected RPG devices. This allows for a remote power reboot of these devices. In case of LAN problems or when TCP/IP communications may be lost, an "out–of–bandwidth" serial, text–based–only control interface is provided from the AUX port on the router directly to the serial port on the power administrator.

5. Narrowband Communications Processing. The narrowband communications processing function interfaces the RPG processor to associated users and non–associated users via modem–based telephone links. The narrowband communications area (zone 2A) is comprised of analog modems or modem–type devices for forwarding the product distributions to the associated (dedicated lines) and non–associated users (dial lines). There are two primary interface points to the narrowband communications processing function. These are the communication servers and the router serial card interfaces.

   a. The three communication servers (zone 3A) receive the product distributions from the RPG processor over TCP/IP links through the LAN switch (a separate TCP/IP link for each server). The communication servers perform protocol translation from TCP/IP to RS–232 serial data for interconnection to the analog–type modem devices which comprise the remainder of the narrowband communications processing function. The communication servers feed each modem with a separate serial line and each server provides up to eight serial links.

   b. The router (zone 3B) receives product distributions from the RPG processor over a TCP/IP link through the LAN switch. The product data is routed to the appropriate serial data line for continued distribution to the end user connected through the narrowband communications area.

6. BDDS. The BDDS (zone 1B) receives a TCP/IP retransmission of the wideband data (bcast) from the RPG processor. The BDDS is a separate processor which acts as a server of base data for the BDDS users. The base data is reprocessed into a unique format, fed out a TCP/IP link, and placed onto the LAN switch in a "partitioned" Virtual LAN segment of the switch (zone 4B). The VLAN segregates

the BDDS TCP/IP data from the normal LAN data for security purposes. BDDS users (four maximum) establish their own links to the remaining VLAN ports. BDDS users must run unique client software to "read" the BDDS–formatted wideband data in from the BDDS server functionality.

7. MSCF. The MSCF (zone 1A) is the man/machine interface that allows the user to interact with the RPG (and the future Open Systems RDA) processor operating system, application graphics, and maintenance programs. The MSCF is a separate processor that allows for processing segregation of this graphical control from the RPG or future RDA processors. The applications functionality specifically designed to provide the graphical control interface to the RPG processor is called the Human Computer Interface. Use of the RPG's HCI is discussed in Section 4.7.

   The MSCF is normally collocated with the associated user workstation (e.g., a PUP) that supports editing of the RCM function. As a result, it may be located locally or distant from the RPG processor. For DoD systems, the association is considered to be distant. For these systems, a MSCF connects to a stand–alone modem or to the Frame Relay Hub Router UD75. In either case, the link provides RPG LAN access through the RPG router. The link also provides for "out–of–bandwidth" power administration via a separate serial connection between the router and the power administrator. The MSCF printer is connected to the MSCF' processor's network interface or to the Frame Relay Hub Router UD75, depending on the configuration.

5.2.2.3 RPG Simplified Functional Flow Diagram (FAA Redundant). Figure FO5–3 depicts functional flow for a FAA RPG. Each major function/subfunction is discussed as it relates to system level functionality. This discussion will primarily discuss Channel 2 of the FAA Redundant system (foldout zone references) since both channels are identical.

1. LAN. The LAN switch (zones 4A and 4B) provides the ethernet TCP/IP network "backbone" for the RPG. Each LAN capable device in the system is interconnected via the LAN switch and provides 10/100 Mbit/sec full duplex (if needed) TCP/IP communications between all components on the RPG LAN. For the FAA system, there is a TCP/IP Interprocessor link which connects the LAN from Channel 1 to the LAN in Channel 2.

   The Routers (zones 2A and 2B) provide "external" access to the RPG LAN. For the FAA Redundant system, each outer has a serial asynchronous PPP RS–232 modem link connected to a dedicated modem in the modem rack (zones 2A and 2B) for the distant MSCF. If frame relay service is used, each RPG Router has a TCP/IP DSU/CSU module for communication to the Frame Relay Hub Router UD75 DSU/CSU. In either case, this allows the distant MSCF to access both the RPG LAN through the router and the power administrator through a separate serial link between the router and the power administrator. Although each router has its own modem link and/or DSU/CSU, there is actually only a single 4–wire circuit to the distant MSCF and that 4–wire circuit is switched between channels by the relay box whenever a channel change occurs. The distant MSCF is connected to the RPG via

a LAN bridge, and all LAN capable devices of the distant MSCF are considered a part of the RPG extended LAN.

2. Wideband Communication. T1 DSX–1 (analog) wideband data enters from either RDA channel (reference WBC Group, NWS EHB 6–545). This data is fed to the RDA/RPG Gateways (zones 4A, 4B). The gateways have a built–in CSU/DSU which converts the data from an analog to digital format and then performs the protocol translation to TCP/IP. The RDA wideband data (now TCP/IP) is then fed through the LAN to the respective RPG Processor (zones 3A, 3B).

3. RPG Processor.

   a. The RPG processor (zones 4A, 4B) receives the following data from the RDA:

      - RDA status data
      - Digital radar base data
      - RDA performance/maintenance data
      - Console messages
      - Loop back test
      - Clutter filter bypass map

   b. The processor stores this data in shared memory until it is accessed and transferred. The processing equipment transfers the data from shared memory, processes the base data, and converts it into weather and derived products. These products are returned to shared memory where they are accessed and distributed to mass storage. Selected subsets of the products are routinely archived (external SCSI device). The processor responds to requests from associated users and non–associated users (zarchived (external SCSI device). The processor responds to requests from associated users and non–associated users (zone 1B). The RPG processor also transmits the following data to the RDA:

      - RDA control commands
      - Volume coverage patterns
      - Clutter censor zones
      - Requests for data
      - Loop back tests
      - Edited clutter filter bypass map
      - Console messages

   c. The RPG processor also performs the following functions:

- As part of the RPG applications functionality, provides the graphical unit control display via a TCP/IP interface to the MSCF processor (zones 1A, 1B).
- Through TCP/IP paths, provides either RPG applications–based or separate text–based/ graphical control of the UPS or power administrator (zone 3A).

4. Power Administration. The UPS, power administrator, and RMS–controlled power administrators (zones 3A, 3B) are all part of the power administration function. While the details of the actual AC power distribution is discussed in Section 5.11, it should be noted that the RMS–Controlled Power Administrators (actually two units) are controlled through the FAA RMS while each of the other two power administration devices (UPS and power administrator) are controlled through a TCP/IP path to the RPG processor or the MSCF. Each of the RMS–controlled power administrators also have a TCP/IP link to the LAN switch; however, it is only used for secondary control and monitoring functions.

   For the power administrator, the TCP/IP link allows for either a text–based or a graphical control and monitoring interface that can be used to individually turn off or turn on the AC power for selected RPG devices. This allows for a remote power reboot of these devices. In case of LAN problems or when TCP/IP communications may be lost, an “out–of–bandwidth” serial, text–based–only control interface is provided from the AUX port on the router directly to the serial port on the power administrator. This is the same in both channels of the redundant system.

5. Narrowband Communications Processing. The narrowband communications processing function interfaces the RPG processor to associated users and non–associated users via modem–based telephone links. The narrowband communications area (zones 2A and 2B) is comprised of analog modems or modem–type devices for forwarding the product distributions to the associated (dedicated lines) and non–associated users (dial lines). There are two primary interface points to the narrowband communications processing function. These are the communication servers and the router serial card interfaces.

   a. The three communication servers (zone 3A, 3B) receive the product distributions from the RPG processor over TCP/IP links through the LAN switch (a separate TCP/IP link for each server). The communication servers perform protocol translation from TCP/IP to RS–232 serial data for interconnection to the analog–type modem devices which comprise the remainder of the narrowband communications processing function. The communication servers feed each modem with a separate serial line and each server provides up to eight serial links.

   b. The router (zones 2A and 2B) receives product distributions from the RPG processor over a TCP/IP link through the LAN switch. The product data is routed to the appropriate serial data line for continued distribution to the end user connected through the narrowband communications area.

6. MSCF. The MSCF (zones 1A, 1B) is the man/machine interface that allows the user to interact with the RPG (and future Open Systems RDA) Processor operating system, application graphics, and maintenance programs. The MSCF is a separate processor that allows for processing segregation of this graphical control from the RPG or future RDA processor. The applications functionality specifically designed to provide the graphical control interface to the RPG processor is called the Human Computer Interface. Use of the RPG's HCI is discussed in Section 4.7.

   The MSCF is normally collocated with the associated user workstation (e.g., a PUP) that supports editing of the RCM function. As a result, it may be located locally or "distant" from the RPG processor. For FAA systems, it is considered to be "distant" from the RPG processor because the RPG is collocated with the RDA and a long distance away from the MSCF. A distant MSCF connects to a dedicated modem or to a frame relay hub router. The dedicated modem or frame relay hub router is then connected to either a dedicated modem in the RPG or a DSU/CSU module in the RPG router. Either link is switched within the relay box during a channel switch so it can connect to either channel. This link provides RPG LAN access through the router and also provides for "out–of–bandwidth" power administration via a separate serial connection between the router and the power administrator. The MSCF printer is directly connected to the MSCF processor's network interface or the Frame Relay Hub Router UD75.

7. Relay Box. The relay box (zone 2B) contains up to 60 relays that are used to switch narrowband communication lines from Channel 1 or Channel 2 to associated, non–associated, and other users. One contact of each relay is connected to a dial or leased narrowband line of Channel 1. A second contact of each relay is connected to a dial or leased narrowband line of Channel 2. The common contact of each relay is connected to the telephone company demarcation frame. The relays are energized by control signals output from the Digital Input/Output (DIO) card of the RPG processor in each channel. The control signals are sent to relay drivers in the relay box, which output a +28V RTN CTRL signal to the relay coils.

8. RMS Links. These links (zones 3A and 3B) are present only in the FAA Redundant system. Two links from each RPG serial card provide the RMS access to the processor system and the applications functions. Two additional links for each channel are provided between RMS and the two RMS–controlled power administrators in each channel.

Section 5.3. LAN and Power Administration Functional Description

NOTE

This chapter and its corresponding sections refer to the RPGPCA as UD70. Unless otherwise specified for FAA redundant systems, this information also applies to RPGPCA UD170.

5.3.1 INTRODUCTION.

The LAN provides the ethernet TCP/IP network "backbone" for the system. Most all RPG components communicate with each other using TCP/IP and the LAN provides the central interconnectivity point for these devices.

5.3.2 GENERAL DESCRIPTION.

The RPG LAN and the "distant" access interface equipment, as described in Section 5.2, consists of the following components (see Figure FO5–4):

- LAN Switch UD70A13 (Sheet 1)
- Router UD70A2 (Sheet 2)

The Power Administration equipment, as discussed in Section 5.2, consists of the following equipment (see Figure FO5–4):

- Uninterruptable Power Supply UD70A11 (Sheet 1)
- Power Administrator UD70A10 (Sheet 1)
- FAA Power Administrators UD70/170A28 and UD70/170A29 (Sheet 1)

5.3.3 LAN.

The LAN provides the ethernet TCP/IP network "backbone" for the system. Most all RPG components communicate with each other using TCP/IP and the LAN provides the central interconnectivity point for these devices. See Figure FO5–4, Sheets 1 and 2.

5.3.3.1 LAN Switch UD70A13. The Cisco 2924 LAN Switch (Sheet 1, zones 4A, 4B) is the "backbone" of the system. This LAN Switch provides 24 "switchable" 10BaseT or 100BaseT RJ–45 ports. The switch is a self–contained unit with an integrated power supply, 4 MB of internal memory, and has no internal Line Replaceable Units (i.e., no internal components replaced at field level). The switch provides autosensing for switching between 100 Mbps and 10 Mbps and also provides autonegotiation of half duplex and full duplex operation.

The switch provide TCP/IP controls not available with a hub. This includes address "learning", filtering controls, port security features, spanning–tree protocols, and remote monitoring capabilities to name a few. While use of many of these features may not be readily apparent to the user, their

capabilities are built−in, and in many cases used during normal switch operation. One capability of the switch that is specifically used for the RPG is the concept of a VLAN that can be used to segregate certain LAN traffic from other LAN traffic. This concept is discussed more specifically later.

The switch can be setup, controlled, and monitored through either a direct serial connection (console port), a text−based TCP/IP interface (telnet), or a browser display (e.g., "Netscape") from a built in web server within the switch. Use of telnet is discussed in Section 4.3 and specific setup procedures are discussed in paragraph 6.6.10. The cables connected to each of the LAN switch ports are a standard seven foot Category 5 (good for 100 Mbps) "patch" cord, unless otherwise specified. The following details the specific TCP/IP interconnectivity of each LAN switch ports.

- Port 1 − Connects directly to Network Interface J2 <...> on the RPG Processor UD70A7.
- Port 2 − In NWS systems only, this cable will connect to the cabinet Input/Output (I/O) cable entrance panel of UD70. From there, an ethernet cable (< 300 feet) is connected directly to MSCF Printer UD79A1. For DoD and FAA sites, this cable is not used since the MSCF printer would be directly connected to the Distant MSCF via the Frame Relay Hub Router UD75A1.
- Port 3 − Connects directly to ethernet interface port ETH0/0 of Router UD70A2.
- Port 4 − For NWS and DoD systems, connects directly to Network Interface J2 <...> of BDDS Processor UD70A1.
- Port 5 − Not used at this time.
- Port 6 − Connects directly to the 10BaseT LAN port of the Polycom RDA/RPG Gateway.
- Port 7 − In FAA Redundant systems only, port 7 is cabled to the cabinet I/O cable entrance panel in each channel. An ethernet cable will connect the two cabinet I/O cable entrance panel connectors and provide a TCP/IP interprocessor link for the redundant system. See paragraph 5.4.11 for further discussion on the FAA Redundant interprocessor link.
- Port 8 − Connects directly to the Network Module of UPS UD70A11.
- Port 9 − Connects directly to the 10BaseT LAN port of Power Administrator UD70A10.
- Port 10 − In FAA Redundant systems only, connects directly to the EIA−232 port of the RMS−controlled Baytech Power Administrator UD70/170A28.
- Port 11 − In FAA Redundant systems only, connects directly to the EIA−232 port of the RMS−controlled Baytech Power Administrator UD70/170A29.
- Port 12 − For NWS and DoD systems, connects directly to the secondary network interface supplied by PCI card UD70A1A1A1 of BDDS Processor UD70A1.
- Ports 13 through 16 − For NWS and DoD systems, these four ports are cabled to the RPG cabinet I/O cable entrance panel and provide access for four external users of the "distributed" base data. Any communications equipment connected to these ports on the

cabinet I/O cable entrance panel are the responsibility of the end users and is not part of the WSR–88D system.

- Port 17 – Connects directly to the TX port of Communication Server A, UD70A15.
- Port 18 – Connects directly to the TX port of Communication Server B, UD70A16.
- Port 19 – Connects directly to the TX port of Communication Server C, UD70A17.
- Ports 20 through 24 – Not used at this time.
- Console Port – Connects to the 8–port serial card of the RPG Processor UD70A7.

5.3.3.2 Router UD70A2. The Cisco 3640 Router UD70A2 (Sheet 2, zone 2A,B,C) is designed to provide external access into the RPG LAN. It receives a TCP/IP feed into its E0/0 ethernet port directly from LAN switch port J3. For all NWS sites, a secondary TCP/IP ethernet cable is connected between the E0/1 ethernet port and the cabinet I/O cable entrance panel (as traced through flow designator **A**) and then subsequently on to the MSCF. In this function, the router acts as a bridge between the two ethernet ports and "bridges" the MSCF onto the RPG LAN, thus isolating MSCF control over power administration from RPG LAN failure to a certain extent. In an FAA Redundant system, this link (as traced through flow designator B) provides for a second channel–to–channel TCP/IP interprocessor link (redundant to main link provided between each channel's LAN switch). Ethernet port E1/1 is a future expansion port for LAN–to–LAN type user interfaces. The AWIPS user LAN–to–LAN interface is connected to ETH1/0 in an NWS system, as depicted on Figure FO5–4, Sheet 2. A DSU/CSU Module (A1W1) will be used for communicating with a similar module in the future ORDA system.

For DoD and FAA systems, the router acts as a LAN bridge for communicating with the Distant MSCF. At those sites with frame relay service, a DSU/CSU module (A1W0) in the RPG Router communicates with a similar module in the Frame Relay Hub Router UD75 located near the Distant MSCF. Sites without frame relay service, the Router communicates via a RS–232 TCP/IP serial–asynchronous PPP link to the Distant MSCF. This serial–asynchronous PPP link will always leave the Router on serial port 2/0. For DoD systems and both FAA redundant channels, this cable will connect to the MSCF modem (UD70/170A14A21) in the modem rack

The router provides PPP connections over RS–232 serial links for TCP/IP associated and non–associated users. These users have external ingest and display systems. Their data is routed based on Router Information Protocol (RIP). For the NWS system, up to eight PPP connections (ports 2/0 through 2/7) are configured. For DoD and FAA systems, up to seven connections (ports 2/1 through 2/7) are configured. These connections are depicted in Figure FO5–4, Sheet 2 (zone 1C).

5.3.3.2.1 DSU/CSU Module UD70A2A1A1W0. For all sites, a Data Service Unit/Channel Service Unit (DSU/CSU) Module UD70A2A1A1W0 will be installed in the Router UD70A2 (shown on Figure FO5–4, Sheet 2, zone 2B). For DoD and FAA sites, this module supports TCP/IP communications of the MSCF and RPS data. For NWS sites, this module will be used in the future. A T1 DSX–1 formatted TCP/IP link will leave this DSU/CSU module from port W0, be fed out the cabinet I/O cable entrance panel and through a commercial T1 link, and will end up at the DSU/CSU module in the Frame Relay Hub Router UD75 located at some NWS Weather Station offices.

5.3.3.2.2 DSU/CSU Module UD70A2A1A1W1. For all sites, a Data Service Unit/Channel Service Unit (DSU/CSU) will be installed in the Router UD70A2 (shown on Figure FO5−4, Sheet 2, zone 2B). This future module link will support TCP/IP communications between the RPG and Open Radar Data Processor (ORDA). A T1 DSX−1 formatted TCP/IP link will leave this DSU/CSU module, be fed out the cabinet I/O cable entrance panel and through a T1 link, and will end up at another DSU/CSU module in the ORDA cabinet.

5.3.4 POWER ADMINISTRATION.

For most of the RPG equipment, the quality of the power is critical to continuous, uninterrupted operation. For this reason, critical RPG components are powered from an UPS. In some cases, individualized control of the power to a device is necessary to either control its turn on sequence or to allow for a remote power off/on "reset" of the device. This is accomplished by unique power administrators.

5.3.4.1 UPS UD70A11. An APC SmartUPS 1400 (zone 3A) provides the uninterrupted AC power for the power administrators and other selected devices in the RPG Processor/Communications Assembly (UD70). The actual details of AC power distribution are discussed in Section 5.11. To provide for setup, control, and monitoring of the UPS through use of a telnet session, a TCP/IP link is provided into the UPS network module from LAN Switch UD70A13 port 8.

A separate serial RS−232 link is connected between the UPS console port and a serial port on RPG processor UD70A7. In case of LAN problems, this allows for a separate control path to the UPS. Also, should the UPS determine that commercial power may be lost beyond the time that the UPS battery can sustain AC power output to the RPG loads, the UPS, through control by the "PowerChute" software, can send a signal out the serial RS−232 link to the processor to shut the processor down. When power is restored, the processor will boot normally from the power−off state.

5.3.4.2 Power Administrator UD70A10. APC MasterSwitch Power Administrator UD70A10 (zones 2A, 3A) provides for individual control of AC power to selected devices (eight maximum). This allows a selected device to be powered off, powered on, or rebooted (sequenced five second off/on), thus achieving a remote reset capability for the device. The actual details of AC power distribution are discussed in Section 5.11 and paragraph 4.9.4 contains additional information for actually controlling the outlets. To provide for setup, control, and monitoring of the power administrator through use of a telnet session, a TCP/IP link is provided into the MasterSwitch Power Administrator Network Interface from LAN Switch UD70A13 port 9.

A separate serial RS−232 link is connected between the MasterSwitch Power Administrator serial port and the AUX port on the Router UD70A2. In case of LAN problems, this allows for a separate "out−of−bandwidth" control path to the MasterSwitch. Thus, as long as the MSCF has a good link to the router, it can access the power administrator through this serial control path. Paragraph 4.9.4.3 contains additional information for actually controlling the outlets through this "out−of−bandwidth" path.

5.3.4.3 FAA RMS Power Administrators UD70/170A28 and UD70/170A29. FAA RMS Power Administrators UD70/170A28 and UD70/170A29 (zones 2A, 3A) provides for individual control of AC power to selected devices (four maximum on each administrator). This allows a selected device to be powered off and on remotely. However, unlike the MasterSwitch power administrator, these power administrators are note directly controlled through the LAN or a serial connection to the MSCF processor. Rather, they are controlled through a serial RS–232 connection from the FAA RMS. A serial cable is connected between each administrator and the cabinet I/O cable entrance panel of the UD70 and from each cabinet I/O cable entrance panel port, another cable will remotely connect these links to the RMS. A TCP/IP path will exist to the LAN switch; however, it is used for secondary control and monitoring purposes only.

Section 5.4. Product Generation Processor Functional Description

NOTE

This chapter and its corresponding sections refer to the RPGPCA as UD70. Unless otherwise specified for FAA redundant systems, this information also applies to RPGPCA UD170.

5.4.1 INTRODUCTION.

The RPG processor function provides product generation, local storage, distribution control, and archiving of selected products and derived data. It controls the RDA operating modes and monitors the operational status of the overall WSR–88D system. It provides the graphical Human Computer Interface for system control and monitoring. It also provides a retransmission of the wideband data (bcast) to the BDDS.

1. The RPG processor receives the following data from the RDA:

   - RDA status data
   - Digital radar base data
   - RDA performance/maintenance data
   - Console messages
   - Loop back test
   - Clutter filter bypass map

2. The processor stores this data in shared memory until it is accessed and transferred. The processing equipment transfers the data from shared memory, processes the base data, and converts it into weather and derived products. These products are returned to shared memory where they are accessed and distributed to mass storage. Selected subsets of the products are routinely archived (external SCSI device). The processor responds to requests from Class 1 associated users, Class 2, non–associated users, and Class 4 other users through the narrowband communications function. The RPG processor also transmits the following data to the RDA:

   - RDA control commands
   - Volume coverage patterns
   - Clutter censor zones

- Requests for data
- Loop back tests
- Edited clutter filter bypass map
- Console messages

3. The RPG processor also performs the following functions:

- Ingests fault alarms from the MLOS system for sites that use a direct MLOS feed for the wideband data. (selected NWS sites only)
- Provides a retransmission of the wideband data (bcast) in TCP/IP format to the BDDS. (NWS and DoD sites only)
- As part of the RPG applications functionality, provides the graphical unit control display via a TCP/IP interface to the Master System Control Function processor.
- Through TCP/IP paths, provides either RPG applications–based or separate text–based/ graphical control of the UPS or power administrator.

5.4.2 GENERAL DESCRIPTION.

The actual RPG processor is a Sun Ultra 10 processor assembly (UD70A7). It is a uniprocessor system that uses an UltraSPARC 440 MHz processor. The UltraSPARC–IIi CPU supports high–performance 64 bit processing and uses PCI technology as the primary I/O bus. The RPG Product Generation Processor and peripherals, as described in Section 5.2, can be divided into the following functionalities

- CPU
- Memory
- Internal Bus Structure
- Internal Peripherals
- I/O Connectors and External Interconnects
- PCI Cards and External Buses/Interconnects
- Serial Interconnect Functionality

These functions are described in paragraphs 5.4.3 through 5.4.9. In addition, paragraph 5.4.10 will discuss the KVM switch (UD70A3) which is not actually part of the RPG processor, but must be used within the cabinets whenever the BDDS processor is also installed in the cabinets. Figure FO5–5, an overall functional block diagram of the Product Generation Processor and

peripherals, shows the composition of each function as well as the interrelationship between functions.

5.4.3 CPU.

The CPU is part of a CPU Module Assembly (UD70A7A1A5) (zone 2A) which mounts on and plugs into the Ultra 10 Motherboard (UD70A7A1A6). The actual Ultra 10 CPU is a 440 MHz UltraSPARC−IIi superscalar processor implementing a SPARC−V9 64−bit RISC architecture. The CPU module is capable of sustaining execution of up to four instructions per cycle even in the presence of conditional branches and cache misses. The CPU module has four integer execution units, three floating point execution units and two graphics execution units which supports 2D and 3D graphics, image processing, video compression/decompression, and video effects. Little−endian or big−endian byte ordering is selectable and the CPU supports power management (power saving) functions. The CPU module has 2 Mbyte of cache and has four 256K x 18 SRAMs (Static Random Access Memory).

5.4.4 MEMORY.

The memory (zone 2A) consists of 168−pin 60 nano−second (ns) Extended Data Out (EDO) 3.3.vdc DIMMs (Dual In−line Memory Module) plugged into motherboard sockets. The RPG Processor Ultra 10 has two 128 Mbyte DIMMs for a total of 256 MB. All memory addressing and control is driven from the CPU module by a Memory Control Unit (MCU) to the motherboard and then buffered to the DIMM DRAMs (Dynamic Random Access Memory). The MCU performs Error Checking Code (ECC) generation and checking. DRAMS are designed so that data can be read or written in approximately the same amount of time for any memory location. The data path on the DRAM side for the actual DIMMs is 144 bits and the data is multiplexed to 72 bits wide on the processor side by use of transceiver switches. A 72−bit data bus exists between the CPU module and the Memory DRAM/DIMM area.

5.4.5 INTERNAL BUS STRUCTURE.

The motherboard uses PCI bus technology as the primary internal bus structure. The primary PCI bus from the processor is a 32−bit, 66 MHz, 3.3 vdc bus (zone 2A) and connects internally on the motherboard to an Advanced PCI Bridge (APB). The APB generates two secondary PCI busses:

1. PCI Bus A is a 32−bit, 33 MHz bus which is used on the four slot PCI Riser Assembly UD70A7A1A1 (zone 3B). PCI Bus A is a 5 vdc−only bus and only supports 5 vdc PCI boards.

2. PCI Bus B is a 32−bit, 33 MHz bus. Unlike bus A, it does nor directly support any PCI slots; however, does communicate with the other motherboard interface integrated circuits as follows:

   a. Ultra ATA interface. The term Ultra ATA is synonymous with Enhanced Integrated Drive Electronics (EIDE). The Ultra ATA interface (zone 2B)

generates two logical EIDE bus channels with maximum transfer rates up to 16.67 MB per second. EIDE Channel 1 is interfaced off the motherboard on the J15 connector and is used for up to two hard drives (zone 2A). EIDE Channel 2 is interfaced off the motherboard on the J14 connector which has a separate EIDE bus cable going to the CD−ROM drive (UD70A7A1A3).

b. Graphics Controller. This is the on−board 8 bit graphics controller which feeds the monitor video out the J4 HD15(F) video connector at the rear of the unit.

c. ASIC/EBus 2 interface. The ASIC (Applications−Specific Integrated Circuit)/EBus 2 interface (zone 3A) actually provides two unique type of interfaces. The ASIC portion of this functionality provides an ethernet channel engine through a buffered direct memory access (DMA) media access controller (MAC). The DMA engine has independent transmit/receive channels each with 2 Kbytes of on−chip buffering. The MAC provides a 10/100 Mbps ethernet protocol (conforming to IEEE 802−3, proposed IEEE 802.30, and Ethernet specifications) out the J2 network interface connector.

   The EBus2 interface generates the EBus 2 bus. Up to eight, 8−bit “Intel−style” devices can be connected to this bus. In this case, these “devices” are integrated onto the motherboard. The specific motherboard devices (zone 3A) used in this application are:

   - Super IO − Generates keyboard, mouse, parallel, and diskette (floppy) port functionalities.
   - NVRAM/TOD − Provides the NVRAM for storing system variables used by the boot PROM. The Time Of Day (TOD) functionality is the internal time keeping functionality.
   - Serial Controller − Generates two serial ports. Either port can handle asynchronous serial RS−232 communications up to rates of 430 Kbaud. Port A (but not port B) can also do synchronous serial RS−232 communications with external clock rates up to 460 Kbaud.
   - CODEC (not shown) − The CODEC is the built−in audio device to support the necessary analog−to digital conversions (e.g., microphone input) and digital−to−analog conversions (e.g., headphone output) for the system audio. The CD−ROM does have an input to this device and the internal mono speaker is also automatically attached as an output to this device.

5.4.6 INTERNAL PERIPHERALS.

The Ultra 10 supports a standard diskette drive (floppy), a CD−ROM drive, and one or two hard drives as follows:

1. Floppy Diskette Drive UD70A7A1A2 (zone 2B) supports standard 3.5−inch diskettes and the Ultra 10 is designed to read either DOS− or Sun−formatted

diskettes. The diskette drive bus is connected from motherboard connector J16 which is fed from an on−chip disketted controller which is part of the Super IO Controller functionality

2. CD−ROM Drive UD70A7A1A3 (zone 2B) is a standard CD−ROM device. It is connected through an IDE ribbon bus cable to motherboard connector J14 which is fed from motherboard EIDE Channel 2. The CD−ROM drive also has an audio cable that connects to motherboard connector J9 (not shown).

3. Hard Disk UD70A7A1A4 (zone 2A) is the primary system disk drive. This drive has a formatted capacity of at least 9 GB (newer models have higher capacity drives). Sun's disk management software uses approximately 400 MB of the disk space. An optional (slave) hard drive may also be installed. This drive (or drives) are connected through an IDE ribbon bus cable to motherboard connector J15 which is fed from motherboard EIDE Channel 1. It should be noted that the connector position along this bus cable determines which drive is the master drive. The master drive is always the drive connected closest to the motherboard connector.

5.4.7 I/O CONNECTORS AND EXTERNAL INTERCONNECTS.

The following I/O connectors (ports) are supported directly from the motherboard:

1. J1 (zone 3B) − Provides the keyboard/mouse DIN−8 type connection. In the case of the RPG processor, this port is cabled to the keyboard input 1 on the UD70A3 KVM switch if a BDDS processor is installed in the cabinets. If the BDDS processor is not installed, this cable would connect directly to the UD70A5 keyboard.

2. J2 (zone 3A) − Provides the TPE RJ−45 type connector for ethernet connectivity to the RPG LAN. In this case, it is cabled directly to the LAN switch.

3. J3 (zone 3A) − Provides the Serial Port A, DB−25(F) connector. See paragraph 5.4.9 for a further details on actual serial port interconnectivity.

4. J4 (zone 3A) − Provides a 15−pin mini D−sub (HD15) connector for the graphics video output. In the case of the RPG processor, this port is cabled to input 1 on the UD70A3 KVM switch if the BDDS is in the RPG cabinets (zone 1B, flow designator F). If the BDDS equipment is not used, this port is cabled directly to graphics monitor UD70A4 (zone 1B).

5. J7 (zone 3A) − Provides the Serial Port B, DB−9(M) connector. See paragraph 5.4.9 for a further details on actual serial port interconnectivity.

6. J8 (zone 3A) − Provides the parallel port functionality that would normally be used to connect a parallel printer. This port is not used on the RPG processor.

5.4.8 PCI CARDS AND EXTERNAL BUSSES/INTERCONNECTS.

The RPG Ultra 10 processor can support up to 4 PCI cards plugged into PCI Riser Assembly UD70A7A1A1 (zone 3B). PCI card 1 is closest to the motherboard and would be towards

the left side when viewing the rear of the Ultra 10 processor. For the RPG processor, four cards are installed as follows:

1. PCI 1 − A Sun SCSI host adapter card. At a desired aggregate data transfer rate of 40 MB/sec, this SCSI adapter card can support up to 14 external SCSI devices. The card has two Ultra−SCSI type connectors that can generate two separate physical SCSI busses and seven SCSI devices could be connected to each bus. Only Connector 0 is used for the RPG processor and it can support seven devices, with device ID numbers (or "target numbers") of 0 through F (Hex,15 decimal) excluding ID 7. ID seven is always reserved for the card itself. For the RPG, the only device connected to this bus is the Jaz Drive (UD70A8) used for Archive III recording and backup purposes. The Jaz Drive ID is set to "3".

2. PCI 2 − A four port serial interface card. This card can support up to four separate serial ports in addition to the two which are available directly off of the Ultra 10's motherboard. While the two on the motherboard are designated "A" and "B", these ports are designated Port 0 through Port 3. See paragraph 5.4.9 for a further details on actual serial port interconnectivity.

3. PCI 3 − An eight−port serial interface card which is referred to as the RPG Embedded Console Server. This card can support up to eight separate serial ports. These ports are designated Port 4 through Port 11. This is in addition to the serial card installed in PCI 2 and the two serial ports which are available directly off of the Ultra 10's motherboard. See paragraph 5.4.9 for further details on actual serial port interconnectivity.

4. PCI 4 − An Advantech DIO Controller card. This card converts digital signals from/to analog differential driver signals and is used as the control interface to the Relay Box UD31 (FAA systems only). This relay box interface card is present in all RPG processors (for logistics purposes) but is only used in FAA redundant systems. There is a card installed in the RPG processor of each channel. It enables the RPG Processor of a channel to command the relays in Relay Box UD31. The processor of a particular channel commands the relay box to switch its contacts so that the channel's narrowband lines connect to associated and nonassociated PUPs and other users via the telephone company demarcation frame. The relay box feeds back a signal to the DIO card to tell the RPG processor that the relays have been switched.

5.4.9 SERIAL INTERCONNECT FUNCTIONALITY.

From a combination of the serial ports on the motherboard (designated "A" and "B") as well as the serial ports (designated 0 through 3) generated by the PCI 2 serial interface card, and serial ports (designated 4 through 11) by the PCI 3 serial interface, the following interconnect functionality exists:

- Serial Port A − In an NWS system that has a WSR−88D−integrated MLOS wideband functionality, this serial asynchronous port is connected through an RS−232 cable (flow designator G, zone 1A) to the SHM UD70A19. For these

systems, the MLOS radio produces fault alarm signals in the form of serial digital words. These RS−232 formatted signals are converted to an analog modem−type signal and are routed to the RPG's SHM. The output of the short−haul modem is fed into serial port "A" via the RS−232 cable. The RPG processor applications functionality ingests this data from serial port "A" and displays this fault information as part of the RPG's HCI functionality.

- Serial Port B − For the RPG processor, this serial asynchronous port is normally cabled to the serial console port on the UD70A11 UPS. This provides a serial path for the PowerChute software running on the RPG processor to be able to monitor and control the UPS independently from the ethernet connection through the LAN. This allows the PowerChute software to shut the RPG processor down when it is determined that site power will be lost for a period greater than for which the UPS can sustain power. When power is restored, the RPG processor will boot back up just based on the return of power.

- Serial Port 0 − For DoD systems, this serial asynchronous port is cabled out the RPG's I/O entrance panel over to the RDA where it is connected to the RDA's RRRAT COM 1 serial port (flow designator B, zones 4B, 1A). When used at the RDA with a normal serial "console" functionality (e.g., a Windows HyperTerminal session on the RRRAT), this serial path will allow a user at the RDA display (and even a dial−in user to the RDA's RRRAT) to establish a "console" connection into the RPG's Ultra 10 processor. After providing a valid login user name and password, this functionality can be used to communicate with the RPG processor at the UNIX OS level (i.e., "command line interface"). This provides an an alternate text−only control display for the RPG processor when it is collocated with the RDA.

  For FAA systems, this serial port is cabled out of the RPG's I/O entrance panel to the FAA's RMS to allow for RMS text only (console functionality) control and monitoring of the RPG (flow designator B, zones 4B, 1A). When used at the RMS with a normal serial "console" functionality (e.g., a Windows HyperTerminal session on the RRRAT), this serial path will allow a user at the RMS to establish a "console" connection into the RPG's Ultra 10 processor. After providing a valid login user name and password, this functionality can be used to communicate with the RPG processor at the UNIX OS level (i.e., "command line interface"). This provides an an alternate text−only control display for the RPG processor at the RMS.

  The console functionality (e.g., a Windows HyperTerminal session) used at the RDA RRRAT (DoD systems) or at the RMS (FAA systems) must be configured for 38,400 baud, 8 data bits, no parity, and 1 stop bit (38400,8,N,1) to communicate with this port. This port is not used for NWS systems.

- Serial Port 1 − This port is cabled to J7 (DB25 female connector) on the cabinet I/O panel (flow designator C, zones 4B, 1A). It is used as a console port to connect certain RPG components and to allow use of a "tip" session from the RPG processor to configure these devices should they require replacement and/or reconfiguration. Section 6.6 will specify use of this port for some device setup procedures.

- Serial Port 2 – This serial port is cabled out of the RPG's I/O entrance panel to the FAA's RMS to allow RMS graphical applications–level control and monitoring of the RPG (flow designator D, zones 4B, 1A). This port is not used for NWS and DoD systems.
- Serial Port 3 – This port is cabled to J8 (DB25 male connector) on the cabinet I/O panel (flow designator E, zones 4B, 1A). It is used as a console port to connect certain RPG components and to allow use of a "tip" session from the RPG processor to configure these devices should they require replacement and/or reconfiguration. Section 6.6 will specify use of this port for some device setup procedures.
- Serial Port 4 – Part of the Embedded Console Server (ECS), this serial port is cabled via octopus cable (70/170W315, P0 (TTY0)) to a loopback adapter CP16 (flow designator H, zones 4B, 1A). The loopback adapter is used to check functionality of the serial card during initial installation and protect the pins of P0 of the octopus cable. P0 can be used to substitute for a malfunctioning serial port. If used as a substitute, when activated for a tip session, use **/dev/cua/4**, instead of the normal command line entry
- Serial Port 5 – Part of the ECS, this serial port is cabled via octopus cable (70/170W315, P1 (TTY1) and cable 70/170W315B) to the LAN Switch UD70A13 Console port (flow designator I, zones 4B, 1A). This connection is used when configuring the LAN switch.
- Serial Port 6 – Part of the ECS, this serial port is cabled via octopus cable (70/170W315, P2 (TTY2) and cable 70/170W315C) to the Router UD70A2 Con (Console) port (flow designator J, zones 4B, 1A). This connection is used when configuring the router.
- Serial Port 7 – Part of the ECS, this serial port is cabled via octopus cable (70/170W315, P3 (TTY3)) to a loopback adapter CP17 (flow designator K, zones 4B, 1A). The loopback adapter is used to check functionality of the serial card during initial installation and protect the pins of P3 of the octopus cable. P3 can be used to substitute for a malfunctioning serial port. If used as a substitute, when activated for a tip session, use **/dev/cua/7**, instead of the normal command line entry.
- Serial Port 8 – Part of the ECS, this serial port is cabled via octopus cable (70/170W315, P4 (TTY4)) to a loopback adapter CP18 (flow designator L, zones 4B, 1A). The loopback adapter is used to check functionality of the serial card during initial installation and protect the pins of P4 of the octopus cable. P4 can be used to substitute for a malfunctioning serial port. If used as a substitute, when activated for a tip session, use **/dev/cua/8**, instead of the normal command line entry.
- Serial Port 9 – Part of the ECS, this serial port is cabled via octopus cable (70/170W315, P5 (TTY5) and cable 70/170W315F) to Communications Server A UD70A15 Console port (flow designator M, zones 4B, 1A). This connection is used when configuring communications server A.

- Serial Port 10 – Part of the ECS, this serial port is cabled via octopus cable (70/170W315, P6 (TTY6) and cable 70/170W315G) to Communications Server B UD70A16 Console port (flow designator N, zones 4A, 1A). This connection is used when configuring communications server B.
- Serial Port 11 – Part of the ECS, this serial port is cabled via octopus cable (70/170W315, P7 (TTY7) and cable 70/170W315H) to Communications Server C UD70A17 Console port (flow designator O, zones 4A, 1A). This connection is used when configuring communications server C.

5.4.10 KVM SWITCH.

For systems that have a BDDS Processor UD70A1 installed in the cabinets, a KVM switch is also installed. This KVM switch allows one monitor and keyboard/mouse to be switched between two or more processors. In this case, the RPG Ultra 10 processor is connected to keyboard/video channel 1 and the BDDS processor is connected to keyboard/video channel 2. Channel selection is available from an on–screen menu. The User Port 1 output is connected to keyboard UD70A5 and the 17″ graphic Maintenance Monitor UD70A4. All three interconnect cables used are "Y" cables that combine the keyboard and video signals as they enter/leave the KVM switch.

5.4.11 RPG/RPG INTERPROCESSOR LINK.

In an FAA redundant system, the processors of both RPGs exchange information through an RPG interprocessor link. Information exchanged includes control data, status data, adaptation data, and state data. The interprocessor link is a 100 Mbps TCP/IP LAN–based link. Port 7 of each channel's LAN switch is connected to CP8 of its respective cabinet I/O panel and CP8 of each channel is connected via a cross–connected ethernet LAN cable.

The link is used by the active channel to transfer information and control to the inactive channel. The active channel updates the inactive channel's RPG state file (VCP information, product/archive lists, etc.) and adaptation data. It also downloads the clutter filter bypass and clutter filter censor zone maps to the inactive channel. In addition, channel status is periodically transmitted and received across the link.

5.4.11.1 Redundant Task Manager. Each channel's RPG processor has a redundant task manager called mng_redundant. These two task managers exchange process and task messages.

5.4.11.2 Channel Status and Control. The following channel–to–channel interaction occurs to allow each channel to monitor the state of the other channel:

1. A ping mechanism is used to determine the state of the channel link. The redundant manager process on each channel generates the ping and the redundant manager process on the other channel sends the ping response.
2. If the redundant manager process aborts on one channel, the other channel will detect this as a RPG/RPG Link Failure because it does not receive the ping response back.

3. The inactive channel interrogates the link less frequently than the active channel to minimize LAN traffic (the inactive channel checks the link about once every 30 seconds while the active channel checks the link about once every 6 seconds). Due to this design, the active channel will usually clear the RPG/RPG Link Failure alarm much faster than the inactive channel.

Section 5.5. RDA/RPG Gateway and Communication Server Functional Descriptions

NOTE

This chapter and its corresponding sections refer to the RPGPCA as UD70. Unless otherwise specified for FAA redundant systems, this information also applies to RPGPCA UD170.

5.5.1 INTRODUCTION.

The Polycom protocol translator provides the "gateway" between the RDA and RPG. Its primary purpose is to provide the protocol translation for the wideband T1 DSX−1 data to TCP/IP format which is used internally on the RPG's LAN components.

Three PTI MPS800 Communications Servers are the heart of the RPG's narrowband communications functionality (Product Distribution). They provide the primary interface between the TCP/IP ethernet−based RPG processor/LAN and the narrowband communications links (primarily modem based). The purpose of the servers are to provide protocol conversion from TCP/IP to X.25 serial protocol used by the RPG's narrowband communications links. All modem equipment, telephone LINE interface equipment, and the FAA Redundant relay box is discussed in subsequent sections.

5.5.2 GENERAL DESCRIPTION.

Figure FO5−6 provides the functional representation of the Polycom protocol translator and the three PTI Communication Servers. Paragraph 5.5.3.1 will discuss the format of the HDLC T1 wideband link and paragraph 5.5.3.2 will discuss the RDA/RPG Gateway and its processing of the actual wideband link data. The internal functionality of an MPS800 Communications Server (without specific regard to the RPG's narrowband links) is discussed in paragraph 5.5.4. Paragraph 5.5.5 will discuss the communication server's processing of the actual narrowband link data.

5.5.3 WIDEBAND LINK.

The wideband link leaves the RDA's Versa Module Eurocard (VME) rack in a HDLC T1 DSX−1 analog format. When it enters the RPG, it must be converted to a digital signal, and then converted from the HDLC serial type format into TCP/IP. This section will explain that process.

5.5.3.1 HDLC Format. The wideband data is formulated at the RDA and provided as a High−level Data Link Control protocol. The RDA's VME wideband card HDLC controller formats the data to conform with the HDLC protocol. Under the HDLC protocol, data is formed into packets before being applied to the packet−switched T1 network defined by the X.25 protocol. An HDLC packet (Figure 5−1) contains an 8−bit starting flag; an 8−bit address; and 8−bit control field; an information field consisting of 8−bit bytes, 16−bit words, or 32−bit longwords; a 16−bit frame check sequence (FCS); and an 8−bit ending flag. The X.25 protocol provides flow control for information, and commands and responses between the two communicating devices.

FLAG	ADDRESS	CONTROL	INFORMATION	FCS	FLAG
01111110	8 BITS	8 BITS	###########	16 BITS	01111110

FLAG = SYNC FLAG SEQUENCE

ADDRESS = SECONDARY STATION ADDRESS FIELD

CONTROL = CONTROL FIELD

INFORMATION = INFORMATION FIELD

FCS = FRAME CHECK SEQUENCE

= UNSPECIFIED NUMBER OF BITS WHICH MAY BE A NUMBER OF 8–BIT BYTES, 16–BIT WORDS, OR 32–BIT LONGWORDS

Figure 5–1. HDLC Frame Structure

The HDLC controller transmits and receives 24 64KB channel data in a time–multiplexed manner via a serial link to the T1 interface section. Each channel can be individually assigned as an HDLC channel. The HDLC controller performs zero–bit insertion and deletion to produce a bipolar bit stream output to the T1 interface section. The bit stream contains alternating positive and negative pulses to represent ones and no pulses to represent zeroes. The positive and negative pulses alternate in sign to eliminate dc components. DSX–1 defines the pulse shape, amplitude, and pulse rate into a 100–ohm load. A zero (0) bit is defined as 0.0 volts over a pulse period of 1/1.544 MHz. A one (1) bit is defined as a positive or negative pulse over 50 percent of the pulse period. DSX–1 requires a minimum of 12.5 percent average ones and a maximum of 15 consecutive zeros.

To meet the DSX–1 requirements, the HDLC controller applies a bit stuffing technique to the data. Under this technique, a zero bit is inserted after five continuous ones are encountered anywhere between the starting and ending flags of the frame. With this scheme, the bit stream is guaranteed not to have more than six continuous ones (but may have more than 15 zeros). The serial bit stream is then inverted, guaranteeing that not more than six continuous zeros exist, thereby meeting the 12.5 percent average ones requirement of DSX–1. The inverted serial bit stream is sent to the T1 interface section where a T1 framer device provides Extended Super Frame, and SLC–96 frame formats and bit robbed and common channel signaling. Line drivers in the line interface section transmit the T1 signal over the DSX–1 interface to its destination. Receiver logic at the destination removes the ones that were introduced during bit stuffing. Transmission over the DSX–1 interface between the RDA and the RPG is accomplished by one of four means:

- Shielded, twisted pair cable
- Shielded, twisted pair cable of up to 3000 feet using a CSU to another CSU in a different building (private T1)
- Leased telephone company T1 channel using a CSU (Telco T1)
- 20−foot twisted pair cable to an MLOS transceiver.

5.5.3.2 RDA/RPG Gateway UD70A12. A Polycom protocol translator (zone 1B) provides the "gateway" between the RDA and RPG. The T1 DSX−1 formatted wideband data from the RDA enters (via the cabinet I/O entrance panel) and is connected directly to the Wide Area Network (WAN) B interface of the RDA/RPG Gateway (UD70A12) on an RJ−48 phone−type jack for DoD and FAA systems. For NWS systems, the data first passes through CSU UD70A18. An RJ−48 jack is the same physical size as a standard 8−wire phone jack (RJ−45); however, in this case the wiring conforms to the RJ−48 standard for T1 communications (pins 1 and 2 are receive while pins 4 and 5 are transmit). The WAN A port on the gateway is not used.

5.5.3.2.1 Gateway CSU/DSU Functionality. The gateway has a built−in CSU/DSU which ingests the T1 DSX−1 wideband data and converts the data from analog to digital. Since this particular CSU functionality is not provided with external switches, CSU−specific parameters are actually built into the firmware and specific versions of the firmware will be provided to the site based upon their needed CSU settings. This will be identified by specific revision levels annotated on the exterior of the gateway. In addition, FAA Channel 1 has a firmware version with a unique embedded MAC address so that the FAA RPGs will assign a unique IP−address to each gateway. The seven possible combinations are as follows:

Rev. Level	Possible Usage	Line Breakout (LBO)	Line Encoding
−301	NWS	0 dB	B8ZS
−307	FAA Channel 1	0 dB	B8ZS

5.5.3.2.2 Gateway Protocol Translation Functionality. The gateway then performs the protocol conversion from HDLC (LAPB) to TCP/IP. This TCP/IP wideband data leaves the 10BaseT LAN port of the gateway and is forwarded to the RPG processor (via the LAN switch). While the protocol conversion process is running internal to the gateway, it should be noted that control and monitoring of this process as well as control and monitoring of the entire wideband physical link is actually handled by the RPG processor's applications software. A communication manager (commonly called a "comm manager"), which is part of the RPG applications software, provides this Applications Program Interface (API) between the RPG processor and gateway. In this case, the comm manager is called cm_atlas (for logging purposes, designated as "cm_atlas.0").

5.5.3.3 CSU UD70A18 (NWS Only). The T1 DSX−1 formatted wideband data enters into the RPGPCA CSU (zone 2B) from the RDA (via the cabinet I/O entrance panel) and then the data is forwarded on to the RDA/RPG Gateway (UD70A12). The CSU is responsible for providing the proper electrical interface to the T1 circuit and for shaping and regenerating the signal. The CSU works with any T1 line format and is transparent to unframed, D4, and ESF line code framing

formats. Optionally, the CSU provides AMI/B8ZS conversion from the DTE to the facility and B8ZS/AMI conversion from the facility to the DTE. The unit monitors transmission for bipolar violations and maintains the pulse density of the transmitted signal. Sealing current can be provided for dry spans. Network and DTE connections are made through RJ–48C jacks.

The CSU supports a loopback test from a remote end and a test switch is provided to activate a loopback test from the local end. The CSU's front panel has features which aid in quick fault isolation. Eleven LED indicators display status, alarm, and test conditions. A DIP switch allows for the quick configuration of operation and test parameters. Test jacks allow bridged monitoring of the passed signal and signal insertion toward the network or the DTE. The test switch activates local and remote loops and controls the internal BERT generator and loopback comparison functions.

5.5.4 COMMUNICATION SERVERS UD70A15, A16, OR A17.

The PTI MPS800 Multi–Protocol Server (MPS) is a LAN based serial X.25 data communications server. It connects to the LAN through a TCP/IP Ethernet interface and provides X.25 connections via its serial ports. In the RPG system, three servers are used and each can "serve" as many as eight separate communications links. It utilizes a Motorola MPC860T Power PC as the main processor/communications controller and a Motorola MC68360 as a slave processor/communications controller. It has 16 MB of main memory, 1 MB of Synchronous Static Random Access Memory (SSRAM), 1 MB of applications flash memory, and 512 KB of boot flash memory. The communication server (see Figure FO5–6) can be divided into the following functionalities which are discussed in paragraphs 5.5.4.1 through 5.5.4.5:

- Ethernet Interface
- Processors/Communication Controllers
- Memory
- Line Drivers/Serial Ports
- Front/Rear Panel Indicators

NOTE

Since all three communication servers are identical in their functionality, all further Figure FO5–6 references will be based on Communication Server A (UD70/170A15).

5.5.4.1 Ethernet Interface. The ethernet port for the incoming TCP/IP feed from the LAN is a standard Category 5 twisted–pair RJ–45 jack connection. The MPS800 uses a Cirrus CS8952PHY Logic CrystalLAN as its internal ethernet interface device (zone 3B). This interface supports IEEE 802–3 auto–negotiation allowing for automatic detection of 100BaseT or 10BaseT connections. This interface is connected to a Fast Ethernet Controller (FEC) within the Master Quad Integrated Communications Controller (QUICC).

5.5.4.2 Processors/Communication Controllers. The MPS800 has a master and a slave QUICC, each providing support for four serial ports.

5.5.4.2.1 Master QUICC. The master QUICC (zone 3B) is the MPC860T PowerPC Fast Ethernet Communications Controller with the main protocol engine running at 50 MHz. It is capable of 32 bit direct memory access to/from shared DRAM for all ports and it provides support for the first four serial ports. It also provides support for the console port functionality.

The master QUICC has three processing functions. As previously indicated, it provides the 10/100 FEC, with integrated first in, first−out buffers and "bursting" direct memory access. This provides high−performance fast ethernet connectivity without affecting the performance of the main processing/communications functionalities. The second processing function is handled by the PowerPC core which is used as the general purpose processor for application programming. It also provides the overall system interface control, interrupt/watchdog timers, bus monitors, real−time clocks, and memory controllers. The third processing function is provided by an imbedded 32 bit RISC engine to provide communications protocol processing (in the case of the RPG, a TCP/IP to X.25 conversion). Interface from this functionality is provided by four Serial Communication Controller (SCC) channels (not shown on Figure FO5−6).

5.5.4.2.2 Slave QUICC. The Slave QUICC is a MC68360 processor running at 25 MHz and it provides for four additional serial interface ports. It just provides the necessary additional communications protocol processing with overall control being maintained by the Master QUICC. It also uses four SCC channels to interface the communications data out to the serial ports (not shown on Figure FO5−6).

5.5.4.2.3 Internal Busses. The main 32 bit bus (zone 3B) provides for data/address flow between the QUICCs and to/from the memory functions. Bus buffer arrays are in use as well as registers, clock steering, and interface selection control functions. A separate Arbitration Bus (not shown on Figure FO5−6) also exists between the master QUICC and the slave QUICC.

5.5.4.3 Memory. The MPS800 has 16 MB of main memory (DRAM), 1 MB of Synchronous Static Random Access Memory (SSRAM), 1 MB of applications flash memory, and 512 KB of boot flash memory (zone 3B).

- DRAM − The MPS800 has a 16 MB, 32 bit EDO−DRAM array for its main memory. Both the Master and Slave QUICC can access this DRAM array and both are capable of 32 bit direct memory access calls to the shared DRAM.

- SSRAM − The MPS800 has a 1 MB, 32 bit SSRAM which is used as a frame buffer array (data and descriptors) for the FEC controller in the Master QUICC. The SSRAM has a lower latency then the DRAM and using the SSRAM for the FEC transmit/receive buffers protects against overflow/underflow conditions.

- Applications Flash Memory − The MPS800 has a 1 MB, 32 bit flash storage bank that is intended to store implementation specific code required for its specific operation (i.e., its protocol conversion functionality).

- Boot Flash Memory − The MPS800 has a 512 KB, 8 bit flash storage bank intended for loading the MPS800 initialization code (e.g., "boot" from the RPG processor).

5.5.4.4 Line Drivers/Serial Ports. The line drivers (zone 3A) are programmable to provide the electrical adaptation of the internal TTL voltage levels to the appropriate WAN serial port signal levels. As controlled by the application software, they can be programmed to either RS−232 or RS−422/EIA−530 levels with RS−232 being used on all RPG ports for initial implementation. Should the MPS800 later be used to support digital interfaces, then RS−422/EIA−530 may be used at that time. The clock select function (internal vs. external) also occurs in this area and in the case of the synchronous serial application in use, external transmit and receive clocks are used from the modems.

The external serial port connections (zone 2B) are provided by eight DB25(F) rear panel connectors. The ports are numbered 0 through 7 with four ports being provided by each QUICC/line driver set. On the rear panel, the ports are in two rows of four each, with ports 0 through 3 on the bottom, and ports 4 through 7 on the top. Within the line driver programming, the ports are always setup and controlled in pairs and thus the port−pairs (e.g., 0 and 1, 2 and 3, etc.) must always be set the same as far as electrical signal level control and protocol conversion.

5.5.4.5 Front/Rear Panel Indicators. The front panel and rear panel indicators (not shown on Figure FO5−6) are grouped into three categories. The groups are for Ethernet status, system status, and software status.

- Ethernet Status − The Ethernet status group has indicators for transmit activity (TX), receive activity (RX), collisions (COL, half duplex mode only), full duplex mode (FDX), link status (LINK), and an indicator if a 100 Mbps LAN connection is established (100 BASET). The LINK indicator is also mirrored on the rear panel as a green LED to the right of the Ethernet Port and the 100 BASET indicator is mirrored on the rear panel as a yellow LED to the right of the Ethernet Port.

- System Status − The system status group consists of front panel indicators for power (POWER), system fault (FAULT), and rear panel port configuration indicators. The green POWER LED is lit when the internal power supply voltage monitor detects that the required voltage is available for proper MPS800 operation. A red FAULT LED indicates that a hard system failure occurred requiring operator intervention. On the rear panel, a green port−pair configuration LED indicator is available for each port−pair. If one of these LEDs is lit, that port−pair is configured for RS−232 mode and if it is not lit, then the port−pair is configured for RS−422/EIA−530 mode.

- Software Status − The software status group consists of an LED that indicates if the applications software is running (RUN) and an LED which indicates if a system internal “soft” reset has occurred. The USER LED is programmable by the user and is undefined at this time.

5.5.5 COMMUNICATION SERVERS NARROWBAND PROCESSING.

The RPG processor application's software generates the product and alert data for principal users (external and internal) of the WSR−88D radar. As part of the RPG applications software, the principal user connections are controlled by a product server process (commonly called a "p_server"), which tracks the products/alerts destined for each user connection (based on the user requests). The products/alerts are then distributed to the software task communications managers (commonly called "comm managers") in the RPG applications software (cm_uconx.1 through cm_uconx.3) and each of these comm managers is designed to interface to a specific PTI MPS800 Communications Server (Communication Server A, B, and C respectively, Figure FO5−6). The ports on the three Communication Servers are each individually controlled/monitored by the RPG's product servers/comm managers and products/alerts are distributed on an individual port basis. Communication Server A supports links 1 through 5, Communication Server B supports links 9 through 16, and Communication Server C supports links 17 through 20.

The product/alert data from the RPG processor is forwarded as TCP/IP to the appropriate Communications Server (zones 3A and 3B) via LAN switch ports 17, 18, and 19 (Figure FO5−4). The Communications server performs the protocol conversion from TCP/IP and then ships the data to one of its individual ports, as controlled by the RPG processor. The individual X.25 RS−232 cable feeds from the Communications Servers are directly connected to the RPG's modems (Figure FO5−7 for NWS/DoD systems or Figure FO5−8, Sheet 1 for FAA redundant systems). For NWS systems, the first port of Communication Server B would actually connect to the RS−232/422 converter used in the 56 Kbps link to AWIPS.

Section 5.6. Narrowband Communications Functional Description

NOTE

This chapter and its corresponding sections refer to the RPGPCA as UD70. Unless otherwise specified for FAA redundant systems, this information also applies to RPGPCA UD170.

5.6.1 INTRODUCTION.

The previous section discussed the communications server and the fact that it can generate up to 24 X.25 serial–synchronous RS–232 type circuits. This section will discuss the remainder of the RPG's narrowband communications with the exception of the FAA Redundant Relay box/telephone demarcation which is discussed in Section 5.7.

Serial communications devices are referred to using the generic terms Data Circuit–Terminating Equipment (DCE) or Data Terminal Equipment (DTE). These terms are used to distinguish the functions and characteristics for these two types of related equipment. Industry standards provide the interface definitions and interface selection guidance for DCE and DTE communications equipment. The primary distinction is that DCE devices convert data into format suitable for interface to telephone company commercial lines. When owned by the customer, the DCE device is referred to as Customer Premise Equipment (CPE). Historically, equipment was defined as strictly DTE or DCE, but more recently these functions may be combined. Examples in the RPG/MSCF equipment are as follows:

DCE:	Modems (UD70/170A14A1 – A21 and UD71A5)
DTE:	Serial communications controllers (UD70/170A15 – A17), Router serial card (UD70/170A2A1A2), Distant MSCF serial port A (UD71A1 J3)
DCE/DTE/CPE:	RDA/RPG gateway (UD70/170A12), MSCF internal PCI card modem (UD71A1A2 PCI 1), Router CSU/DSU (UD70/170A2A1A0W0)
CPE:	Channel Service Unit (UD70A18)

5.6.2 GENERAL DESCRIPTION.

Paragraph 5.6.3 will discuss basic modem theory to include the following subjects:

- Modem Transmission
- Modem Reception
- ACU
- Phone Lines
- Full or Half Duplex Transmission Modes
- Asynchronous and Synchronous Serial Data Transmission

Paragraph 5.6.4 will discuss the basic functionality of the RPG's narrowband communication hardware as it relates to the NWS and DoD systems and as shown on Figure FO5−7. Paragraph 5.6.5 will discuss the basic functionality of the RPG's narrowband communications hardware as it relates to the FAA Redundant system and as shown on Figure FO5−8, Sheet 1. The following aspects of the hardware is discussed:

- RS−232/422 Converter and High Speed Modem (NWS only)
- Modem Rack UD70A14
- Adapter and Patch Panels
- Telephone Demarcation (NWS and DoD)

5.6.3 BASIC MODEM THEORY.

The purpose of a modem is to link the serial I/O ports of the DTE via the telephone lines. (DTE is classified as any equipment that sends and/or receives digital data such as computers, printers, and terminals).

5.6.3.1 Modem Transmission. To transmit data over the phone lines, it is necessary to change the digital output of DTE into an analog signal. The analog signal must have a bandwidth narrow enough to fit into the 300 Hz to 3400 Hz frequency range of normal phone lines. To do this, the modem modulates a carrier signal (usually 1700 Hz) with the serial data from the DTE. The modulation may be amplitude, frequency, phase, or some combination of the three. The type of modulation used will determine the maximum rate of data transferred for a given bandwidth. The more complex the modulation, the faster the data can be transferred. On the other hand, complex modulation schemes are more susceptible to noise and error, so fast modems must have sophisticated error handling systems. Regardless of the type of modulation, the carrier will change only in discrete steps, thus if frequency modulation is used, a 1 could be 1.8 kHz and a zero could be 2.1 kHz. In general, the various values of phase frequency or amplitude that the carrier may take on are called states. Each state (or event) on the output of the modem is called a baud and the rate at which the states change is called the baud rate. The bandwidth of the modem output signal is determined by its baud rate. For the modem used, the max baud rate is 2400 baud/sec. The type of modulation used in the modems in this system is called Quadrature Amplitude Modulation (QAM). In QAM, the carrier is modulated in both phase and amplitude. Incoming digital data is encoded up to 4 bits at a time to represent one of 16 possible phase/amplitude combinations. In this way 4 bits of data can be represented by a single transition in the state of the carrier. Thus, for a baud rate of 2400, 9600 bits per second (bps) can be transferred over the phone lines. The 16 phase/amplitude combinations are referred to as a signal−set constellation. The constellation is chosen so that signals are spaced close together. This reduces the amount of power needed for transmission. To reduce the error rate introduced by packing the signals in a dense formation, a coding/encoding technique known as trellis coding is used. This technique restricts the sequences of signals used so that the signals within a sequence are far apart.

5.6.3.2 Modem Reception. In order to receive analog data and convert it back to digital, the modem must demodulate the carrier and convert the various different states back into digital data. To facilitate this, the modem that is transmitting sends a signal which contains frequency, phase, and amplitude references.

5.6.3.3 ACU. Each dial–up line modem contains an internal ACU that operates under CCITT specification V.25 bis. The ACU allows the DTE to initiate calls on the Public Switched Telephone Network. The DTE transfers serial ASCII data to the ACU in a bit–synchronous, HDLC–like protocol outlined in the V.25 built–in synchronization protocol.

1. The ACU uses the Data Terminal Ready (DTR), Ring Indicator (RI), Clear To Send (CTS), DCD, DSR, and RTS signals to signify various states of call establishment.

2. When the modem is disconnected from the telephone line and the DTE has set the DTR signal off, the devices are idle. If the modem detects an incoming call, it alerts the DTE via the RI signal. To answer an incoming call, the DTE must turn the DTR signal on and enter the dialog state. The modem responds by turning the CTS signal on to enter the dialog state.

3. When the modem is in dialog state, it accepts V.25 built–in synchronization commands from the DTE. These commands may be entered by the operator at the keyboard. The Connect Incoming Call (CIC) command instructs the modem to immediately answer an incoming call. The Call Requested Number (CRN) command instructs the modem to dial the number (n) that follows it. The Call Request with Address (CRSA) command instructs the modem to dial a number from a specific address (a) in modem memory. The Disregard Incoming Call (DIC) command instructs the modem to disregard an incoming call.

4. When an incoming call comes in while the modem is in dialog state, the modem answers the call after it receives the CIC command from the DTE. If a CIC command is not issued, the modem answers the call automatically after two rings. When the modem answers the call it enters the connecting state. The modem turns the CTS signal off and does not accept any commands unless the call fails or the call is disconnected. If the call fails, the modem turns the CTS signal on and enters dialog state.

5. When a connection is successful, the modem enters the data state. The modem turns on the DSR and DCD signals and inbound data is accepted from the remote site. When the DTE turns the RTS signal on, the modem turns the CTS signal on and outbound data transmission takes place. If the remote modem disconnects, the local modem drops the connection and enters dialog state. The DTE disconnects the call by turning the DTR signal off.

5.6.3.4 Phone Lines. Telephone lines are either 2–wire or 4–wire. Dial lines are 2–wire and leased lines are either 2–wire or 4–wire. Two–wire lines constitute a single signal path and are usually a twisted pair. A 4–wire line is two twisted pairs.

5.6.3.5 Full or Half Duplex Transmission Modes. Data transmission can be half duplex, simulated half duplex, and full–duplex.

1. In half duplex transmission, data flows in both directions, but only in one direction at a time.

2. Full duplex permits simultaneous transmission in both directions. This is accomplished either by transmitting data at one frequency in one direction and another frequency in the opposite direction, by using 4−wire lines, or by using echo canceling. Echo canceling cleans up the received signal by removing interference and echoes caused by the transmitted signal. It is another method of full duplex modulation over two lines.

5.6.3.6 Asynchronous and Synchronous Serial Data Transmission. In asynchronous transmission, characters travel individually through the line as they occur. The receiving data terminal must recognize when to start sampling the data or it will misinterpret it. For this reason, start and stop bits are added to every character to identify the beginning and end. The receiving DTE will now recognize each character, instead of reading a continuous stream of unintelligible bits.

1. Parity bits are sometimes added to asynchronous characters for error checking. The transmitting data terminal adds bits to make the "1" bits of each character total either an odd or even number. If the receiving data terminal counts the number of bits in a character and finds it is even when it should have been odd, or vice versa, an error has occurred during transmission.

2. In asynchronous transmission, the modem and terminal must agree on transmission rate and the total number of bits in each character. This number includes the bits making up each character as well as start, stop, and parity bits.

In synchronous transmission entire blocks of data, rather than individual characters, are transmitted. These blocks of data are accompanied by timing signals which synchronize the receiving and transmitting DTEs. The data block and timing signals are called frames. Procedures called protocols are usually required to initiate and maintain data exchange during synchronous data communication. These protocols protect against errors. Rather than transmitting individual characters framed by start and stop bits as with asynchronous transmission, data is held in a buffer until a block is created. Then, the entire block is transmitted. The transmitted block is prefixed by SYN or synchronization characters and terminated by end of block characters and block check characters. The number of synchronization characters and their makeup is determined by the protocol used.

5.6.4 PRINCIPAL USER CONNECTIONS IN RPG (NWS and DoD).

The RS−232 serial ports of the communication servers (Figure FO5−6) or router (Figure FO5−4, Sheet 2) are connected to the TELCO through either RS−232 dial−port or dedicated−port modems (Figure FO5−7). The RS−232/RS−422 Converter is only present for NWS systems and except for the possible presence of a dedicated modem in modem rack slot A5, the possible number and location of remaining modems should be the same for the NWS and DoD configurations (although all modems may not actually be installed at all sites). Table 5−1 shows a list of dial and dedicated modems for NWS sites. Table 5−2 shows a list of dial and dedicated modems for DoD sites. These tables are discussed further in paragraph 5.6.4.2. Also see Table 7−2 through Table 7−4 for additional interconnect cabling information.

Table 5–1. Principal User Connections (NWS)

Comm. Device Ref. Des.	Port Number	Applications Product Distribution Link Number	Modem Reference	Modem Port Type
UD70A15	0	1	70A14A1A	Dial
UD70A15	1	2	70A14A1B	Dial
UD70A15	2	3	70A14A2A	Dial
UD70A15	3	4	70A14A2B	Dial
UD70A15	4	5	70A14A3A	Dial
UD70A15	5	6	N/A	N/A
UD70A15	6	7	N/A	N/A
UD70A15	7	8	N/A	N/A
UD70A16	0	9	N/A	RS–232/422 Converter A20
UD70A16	1	10	70A14A6	Dedicated
UD70A16	2	11	70A14A7	Dedicated
UD70A16	3	12	70A14A8	Dedicated
UD70A16	4	13	70A14A9	Dedicated
UD70A16	5	14	70A14A10	Dedicated
UD70A16	6	15	70A14A11	Dedicated
UD70A16	7	16	70A14A12	Dedicated
UD70A17	0	17	70A14A13	Dedicated
UD70A17	1	18	70A14A14	Dedicated
UD70A17	2	19	70A14A15	Dedicated
UD70A17	3	20	70A14A16	Dedicated
UD70A17	4	21	N/A	N/A
UD70A17	5	22	N/A	N/A
UD70A17	6	23	N/A	N/A
UD70A17	7	24	N/A	N/A
UD70A2A1A0	FAST ETH 1	25	N/A	N/A
N/A	N/A	26	N/A	N/A
N/A	N/A	27	N/A	N/A
N/A	N/A	28	N/A	N/A

Table 5–1. Principal User Connections (NWS) – Continued

Comm. Device Ref. Des.	Port Number	Applications Product Distribution Link Number	Modem Reference	Modem Port Type
N/A	N/A	29	N/A	N/A
N/A	N/A	30	N/A	N/A
N/A	N/A	31	N/A	N/A
N/A	N/A	32	N/A	N/A
UD70A2A1A2	1	33	70A14A17	Dedicated
UD70A2A1A2	2	34	70A14A18	Dedicated
UD70A2A1A2	3	35	70A14A19	Dedicated
UD70A2A1A2	4	36	70A14A20	Dedicated
UD70A2A1A2	0	37	70A14A21	Dedicated
UD70A2A1A2	5	38	70A14A3B	Dial
UD70A2A1A2	6	39	70A14A4A	Dial
UD70A2A1A2	7	40	70A14A4B	Dial
UD70A2A1A0	FAST ETH 1	41	N/A	N/A
UD70A2A1A0	FAST ETH 1	42	N/A	N/A

Table 5–2. Principal User Connections (DoD)

Comm. Device Ref. Des.	Port Number	Applications Product Distribution Link Number	Modem Reference	Modem Port Type
UD70A15	0	1	70A14A1A	Dial
UD70A15	1	2	70A14A1B	Dial
UD70A15	2	3	70A14A2A	Dial
UD70A15	3	4	70A14A2B	Dial
UD70A15	4	5	70A14A3A	Dial
UD70A15	5	6	N/A	N/A
UD70A15	6	7	N/A	N/A
UD70A15	7	8	N/A	N/A
UD70A16	0	9	70A14A5	Dedicated [1]
UD70A16	1	10	70A14A6	Dedicated
UD70A16	2	11	70A14A7	Dedicated
UD70A16	3	12	70A14A8	Dedicated
UD70A16	4	13	70A14A9	Dedicated
UD70A16	5	14	70A14A10	Dedicated
UD70A16	6	15	70A14A11	Dedicated
UD70A16	7	16	70A14A12	Dedicated
UD70A17	0	17	70A14A13	Dedicated
UD70A17	1	18	70A14A14	Dedicated
UD70A17	2	19	70A14A15	Dedicated
UD70A17	3	20	70A14A16	Dedicated
UD70A17	4	21	N/A	N/A
UD70A17	5	22	N/A	N/A
UD70A17	6	23	N/A	N/A
UD70A17	7	24	N/A	N/A
N/A	N/A	25	N/A	N/A
N/A	N/A	26	N/A	N/A

1. This modem may be a high speed modem (e.g., 33.6 Kbit/sec) in some cases.
2. The MSCF modem circuit is shown for clarity. It is not part of the Product Distribution functionality; therefore, it will have no interconnection from a Communication Server. This is site specific and does not exist where frame relay is installed.

Table 5−2. Principal User Connections (DoD) − Continued

Comm. Device Ref. Des.	Port Number	Applications Product Distribution Link Number	Modem Reference	Modem Port Type
N/A	N/A	27	N/A	N/A
N/A	N/A	28	N/A	N/A
N/A	N/A	29	N/A	N/A
N/A	N/A	30	N/A	N/A
N/A	N/A	31	N/A	N/A
N/A	N/A	32	N/A	N/A
UD70A2A1A2	1	33	A14A17	Dedicated
UD70A2A1A2	2	34	A14A18	Dedicated
UD70A2A1A2	3	35	A14A19	Dedicated
UD70A2A1A2	4	36	A14A20	Dedicated
N/A	N/A	37	N/A	N/A
UD70A2A1A2	5	38	A14A3B	Dial
UD70A2A1A2	6	39	A14A4A	Dial
UD70A2A1A2	7	40	A14A4B	Dial
			70A14A21	MSCF Dedicated [2] Port Modem (33.6 Kbps)
UD75A1A1ETH1	N/A	41	N/A	N/A
UD75A1A1ETH1	N/A	42	NA	N/A

1. This modem may be a high speed modem (e.g., 33.6 Kbit/sec) in some cases.
2. The MSCF modem circuit is shown for clarity. It is not part of the Product Distribution functionality; therefore, it will have no interconnection from a Communication Server. This is site specific and does not exist where frame relay is installed.

5.6.4.1 RS−232/RS−422 Converter UD70A20. The RS−232 to RS−422 Converter (Figure FO5−7, zone 2B) is part of the NWS−only AWIPS communication link. The RPG and the AWIPS communicate without the use of modems since they are a short distance from each other. Without telephone modems, the two systems can communicate at a rate of up to 56 Kbit/sec. To widen the bandwidth of the channel, an RS−422 link is used. LED indicators on the front of the converter panel indicate the status of the RS−232 and RS−422 signals.

The ninth overall RS−232 channel from the communications servers (actually first channel on server B, Figure FO5−6) is sent to the converter. The RS−422 converter output is sent out the cabinet I/O entrance panel to another similar converter located in the AWIPS.

5.6.4.2 Modem Rack UD70A14. All sites will have modem rack UD70A14 (zone 3B). For some DoD systems, modem slot A21 contains a dedicated modem that is used to provide a modem link between the RPG and the MSCF, if frame relay service is not used. If the DoD site is using a modem−to−modem link versus frame relay service, the modem will always be on the fifth dedicated circuit (J5) of the second dedicated patch panel (UD70A26). For NWS sites, the A5 modem rack slot is empty but is available should the standard 56 Kbit/sec hardware later be replaced by a high speed modem circuit. For DoD sites, modem rack slot A5 could contain a dedicated modem for connection to an NWS AWIPS. If frame relay service has been implemented, that modem should be inactive.

5.6.4.3 Dial Lines. The dual dial−port modems support narrowband dial−line communication links with non−associated users. The dial−port modems provide synchronous, 2−wire, 14400 bps communications. Each dial−port modem card consists of two modems supporting two independent 2−wire public telephone lines.

5.6.4.3.1 Dial Line Interfaces. The narrowband dial−line interface connects the dial−port modems to the telephone companies demarcation frame. The interface consists of Dial Telephone Adapter Panel UD70A24 and Dial−Line Telephone Patch Panel UD70A23. The Dial Telephone Adapter Panel (zone 2B) is connected between the dial−port modems and the Dial−Line Telephone Patch Panel. It provides a transition of 24 RJ45X connectors to one 50 pin standard telco connector. Two mounting posts are provided for each line to mount the program resistor for each line.

The Dial−Line Telephone Patch Panel (zone 2B) supports testing of 24 two−wire dial lines. One 50−pin, female, standard telephone connector mounted on the back of the patch panel is used to connect the patch panel to the Dial Telephone Adapter Panel. One 50−pin, male, D−type connector mounted on the back of the patch panel is used to connect the patch panel to the telephone demarcation block via the cabinet I/O cable entrance panel. Wiring of the Dial Telephone Adapter Panel and telephone line connectors is compatible with RJ21X−type connectors.

5.6.4.4 Dedicated Lines. The dedicated modems support narrowband leased line communication links with principal users. The dedicated port modems for X.25 are synchronous 4−wire 14400 bps units used exclusively for private (leased) line communication (possible 33600 bps modem in modem rack slot A5). The equipment configuration is site dependent.

5.6.4.4.1 Dedicated Line Interface. The narrowband dedicated−line interface connects the dedicated−port modems to the telephone companies demarcation frame. The narrowband dedicated−line interface consists of Leased−Line Dedicated Telephone Adapter Panel UD70A25 and Leased−Line Dedicated Telephone Patch Panels UD70A27 and UD70A26. The UD70A25 dedicated adapter panel (zone 2A) supports connection of up to 24 (4−wire) leased lines. Codex 3263 modems are connected to the UD70A25 dedicated adapter panel via cables terminated with RJ45X modular connectors. The dedicated adapter panel is connected to the UD70A27 dedicated patch panel (zone 2A) via one 50−pin cable. This dedicated patch panel only supports 12 of the 4−wire circuits. The second cable on the dedicated patch panel connects it to the telephone demarcation block via the cabinet I/O entrance panel. Wiring of the 50−pin cables are compatible with the RJ2DX−type connectors. The UD70A26 patch panel (zone 2A) is the second dedicated patch panel used for the remaining Codex 3263 modems as well as the MSCF link for DoD sites where frame relay service is not used.

5.6.4.5 Telephone Demarcation. The telephone demarcation blocks (zone 1A, 1B) is mounted on the wall of the RDA/RPG shelter for DoD sites and on a building wall for NWS sites. These blocks interface the modem lines from the WSR–88D system to the commercial telephone service provider(s). Each patch panel (one dial and one or two dedicated) will have a cable going to a unique block for that panel's interface (via the cabinet's I/O cable entrance panel).

For the dial demarcation block, these are two wire circuits so two tabs on the demarcation block represent one circuit. So starting at the top, tabs one and two would be for dial line one, tabs three and four would be for dial line two, and so forth.

For the dedicated (leased line) demarcation block, these are four wire circuits so four tabs on the demarcation block represent one circuit. So starting at the top, tabs one through four would be for dedicated line one, tabs five through eight would be for dedicated line two, and so forth. For the DoD system, leased line 17 is always the MSCF modem link, if frame relay service is not in use.. Since each demarcation block can only be used for twelve dedicated circuits, the MSCF modem link for a DoD system will be the fifth circuit on the second dedicated demarcation block, if frame relay service is not in use. For NWS systems, dedicated circuit one would be available but not normally used since its corresponding modem rack slot is empty.

5.6.5 PRINCIPAL USER CONNECTIONS IN RPG (FAA REDUNDANT).

The narrowband communication channels of the communication servers (Figure FO5–6) are connected to the narrowband links through either an dial–port modems or dedicated–port modems (Figure FO5–8, Sheet 1). Table 5–3 shows a list outlining the possible combinations of dial and dedicated modems for FAA sites. This table is discussed further in paragraph 5.6.5.1. Also see Table 7–2 and Table 7–4 for additional interconnect cabling information.

Table 5–3. Principal User Connections (FAA)

Comm. Device Ref. Des.	Port Number	Applications Product Distribution Link Number	Modem Reference	Modem Port Type	Relay Ref
UD70/170A15	0	1	70/170A14A1A	Dial	K12
UD70/170A15	1	2	70/170A14A1B	Dial	K12
UD70/170A15	2	3	70/170A14A2A	Dial	K13
UD70/170A15	3	4	70/170A14A2B	Dial	K13
UD70/170A15	4	5	70/170A14A3A	Dial	K14
UD70/170A15	5	6	N/A	N/A	N/A

1. This modem may be a high speed modem (e.g., 33.6 Kbit/sec) in some cases.
2. The MSCF modem circuit is shown for clarity. It is not part of the Product Distribution functionality; therefore, it will have no interconnection from a Communication Server. This is specific and does not exist where frame relay is installed.

Table 5–3. Principal User Connections (FAA) – Continued

Comm. Device Ref. Des.	Port Number	Applications Product Distribution Link Number	Modem Reference	Modem Port Type	Relay Ref
UD70/170A15	6	7	N/A	N/A	N/A
UD70/170A15	7	8	N/A	N/A	N/A
UD70/170A16	0	9	70/170A14A5	Dedicated [1]	K56
UD70/170A16	1	10	70/170A14A6	Dedicated	K1
UD70/170A16	2	11	70/170A14A7	Dedicated	K2
UD70/170A16	3	12	70/170A14A8	Dedicated	K3
UD70/170A16	4	13	70/170A14A9	Dedicated	K4
UD70/170A16	5	14	70/170A14A10	Dedicated	K5
UD70/170A16	6	15	70/170A14A11	Dedicated	K6
UD70/170A16	7	16	70/170A14A12	Dedicated	K7
UD70/170A17	0	17	70/170A14A13	Dedicated	K8
UD70/170A17	1	18	70/170A14A14	Dedicated	K9
UD70/170A17	2	19	70/170A14A15	Dedicated	K10
UD70/170A17	3	20	70/170A14A16	Dedicated	K11
UD70/170A17	4	21	N/A	N/A	N/A
UD70/170A17	5	22	N/A	N/A	N/A
UD70/170A17	6	23	N/A	N/A	N/A
UD70/170A17	7	24	N/A	N/A	N/A
N/A	N/A	25	N/A	N/A	N/A
N/A	N/A	26	N/A	N/A	N/A
N/A	N/A	27	N/A	N/A	N/A
N/A	N/A	28	N/A	N/A	N/A
N/A	N/A	29	N/A	N/A	N/A
N/A	N/A	30	N/A	N/A	N/A
N/A	N/A	31	N/A	N/A	N/A
N/A	N/A	32	N/A	N/A	N/A

1. This modem may be a high speed modem (e.g., 33.6 Kbit/sec) in some cases.
2. The MSCF modem circuit is shown for clarity. It is not part of the Product Distribution functionality; therefore, it will have no interconnection from a Communication Server. This is specific and does not exist where frame relay is installed.

Table 5−3. Principal User Connections (FAA) − Continued

Comm. Device Ref. Des.	Port Number	Applications Product Distribution Link Number	Modem Reference	Modem Port Type	Relay Ref
UD70/170A2A1A2	1	33	A14A17	Dedicated	K24
UD70/170A2A1A2	2	34	A14A18	Dedicated	K25
UD70/170A2A1A2	3	35	A14A19	Dedicated	K26
UD70/170A2A1A2	4	36	A14A20	Dedicated	K27
N/A	N/A	37	N/A	N/A	N/A
UD70/170A2A1A2	5	38	A14A3B	Dial	K14
UD70/170A2A1A2	6	39	A14A4A	Dial	K15
UD70/170A2A1A2	7	40	A14A4B	Dial	K15
			70/170A14A21	MSCF [2] Dedicated Port Modem (33.6 Kbps)	K28
UD75A1A1ETH1	N/A	41	N/A	N/A	
UD75A1A1ETH1	N/A	42	N/A	N/A	

1. This modem may be a high speed modem (e.g., 33.6 Kbit/sec) in some cases.
2. The MSCF modem circuit is shown for clarity. It is not part of the Product Distribution functionality; therefore, it will have no interconnection from a Communication Server. This is specific and does not exist where frame relay is installed.

5.6.5.1 Modem Rack UD70/170A14. All sites will have modem rack UD70/170A14 (zones 4B or 2B). For some FAA systems, modem slot A21 contains a dedicated modem that is used to provide a modem link between the RPG and the MSCF, if frame relay service is not used. If the FAA site is using a modem−to−modem link versus frame relay service, the modem will always be on the fifth dedicated circuit (J5) of the second dedicated patch panel (UD70A26). For FAA sites, if frame relay service is not used, modem rack slot A5 could contain a dedicated modem for connection to an NWS AWIPS. If frame relay service has been implemented, that modem should be inactive.

5.6.5.2 Dial Lines. The dual dial−port modems support narrowband dial−line communication links with non−associated users. The dial−port modems provide synchronous, 2−wire, 14400 bps communications. Each dial−port modem card consists of two modems supporting two independent 2−wire public telephone lines.

5.6.5.2.1 Dial Line Interfaces. The narrowband dial–line interface connects the dial–port modems to the FAA Redundant relay box shown on Figure FO5–8, Sheet 2 and discussed in Section 5.7. The interface consists of Dial Telephone Adapter Panel UD70/170A24 and Dial–Line Telephone Patch Panel UD70/170A23. The Dial Telephone Adapter Panel (zones 3B or 1B) is connected between the dial–port modems and the Dial–Line Telephone Patch Panel. It provides a transition of 24 RJ45X connectors to one 50 pin standard telco connector. Two mounting posts are provided for each line to mount the program resistor for each line.

The Dial–Line Telephone Patch Panel (zones 3B or 1B) supports testing of 24 two–wire dial lines. One 50–pin, female, standard telephone connector mounted on the back of the patch panel is used to connect the patch panel to the Dial Telephone Adapter Panel. One 50–pin, male, D–type connector mounted on the back of the patch panel is used to connect the patch panel to the relay box via the cabinet I/O cable entrance panel. Wiring of the Dial Telephone Adapter Panel and telephone line connectors is compatible with RJ21X–type connectors.

5.6.5.3 Dedicated Lines. The dedicated modems support narrowband leased line communication links with principal users. The dedicated port modems for X.25 are synchronous 4–wire 14400 bps units used exclusively for private (leased) line communication (possible 33600 bps modem in modem rack slot A5). The equipment configuration is site dependent.

5.6.5.3.1 Dedicated Line Interface. The narrowband dedicated–line interface connects the dedicated–port modems to the FAA Redundant relay box shown on Figure FO5–8, Sheet 2 and discussed in Section 5.7. The narrowband dedicated–line interface consists of Leased–Line Dedicated Telephone Adapter Panel UD70/170A25 and Leased–Line Dedicated Telephone Patch Panels UD70/170A27 and UD70/170A26. The UD70/170A25 dedicated adapter panel (zones 3A or 1A) supports connection of up to 24 (4–wire) leased lines. Codex 3263 modems are connected to the UD70/170A25 dedicated adapter panel via cables terminated with RJ45X modular connectors. The adapter panel is connected to the UD70/170A27 dedicated patch panel (zone 3A or 1A) via one 50–pin cable. The patch panel only supports 12 of the 4–wire circuits. The second cable on the patch panel connects it to the relay box via the cabinet I/O cable entrance panel. Wiring of the 50–pin cables are compatible with the RJ2DX–type connectors. The UD70A26 patch panel (zone 2A) is the second dedicated patch panel used for the remaining Codex 3263 modems as well as the MSCF modem link, where frame relay service is not used..

Section 5.7. Relay Box Functional Description

NOTE

This chapter and its corresponding sections refer to the RPGPCA as UD70. Unless otherwise specified for FAA redundant systems, this information also applies to RPGPCA UD170.

5.7.1 INTRODUCTION.

Section 5.5 discussed the communications server(s) and the fact that they collectivelythey collectively support up to 24 X.25 serial–synchronous RS–232 ports. Section 5.6 discussed the RPG's principal user communications as mapped to the modems and through to the dial/dedicated telephone line interface equipment. This section will discuss the Relay Box UD31, which is only used in the FAA Redundant system.

5.7.2 GENERAL DESCRIPTION.

The Relay Box UD31 is used in FAA redundant systems to enable switching of the modem lines from Channel 1 or Channel 2 to the principal user links. (See Figure FO5–8, Sheet 2.) The relay box contains up to 60 relays. Relays K56, K1 through K15, and K24 through K28 are used to switch principal user modem lines. Relay K55 is used for control purposes. K54 is used for the Distant MSCF connection. All other relays are spared or not used. One set of contacts of each relay is connected to a dial or leased narrowband line of Channel 1. A second set of contacts of each relay is connected to a dial or leased narrowband line of Channel 2. The common contact of each relay is connected to the telephone company demarcation frame. The relays are energized by control signals output from the DIO card of the Product Generation Processor of each channel. The control signals are received by drivers within two circuit card assemblies, UD31A1 and UD31A2, in the relay box. The drivers output +28V RTN CTRL signals to the relay coils.

5.7.3 RELAYS K1 THROUGH K60.

Relays K1 through K60 are push–pull relays which each have four sets of contacts. Relays K56 and K1 through K11 (zone 2A) are used to switch the first 12 leased lines from Channel 1 or Channel 2 to the telephone company demarcation frame (zone 1A). In addition, relays K24 through K28 are used to switch the remaining leased lines from Channel 1 or Channel 2 to the telephone company demarcation frame. The circuit through relay K28 is used for the MSCF link. Each leased line contains four signals, XMIT RING, XMIT TIP, RCV RING, and RCV TIP. Each signal is connected to one contact of a relay, A3 through D3 for Channel 1 leased lines and A1 through D1 for Channel 2 leased lines. In this manner one leased line is switched entirely by one relay. Relays K12 through K19 (zone 2B) are used to switch dial lines from Channel 1 or Channel 2 to the telephone company demarcation frame (zone 1B). Each dial line contains two signals, RING and TIP. Each signal is connected to one contact of a relay, A3 and B3 or C3 and D3 for Channel 1 dial lines and A1 and B1 or C1 and D1 for Channel 2 dial lines. In this manner two dial lines are switched entirely by one relay.

Each relay contains two coils. One coil, when energized, switches all four contacts of the relay to allow Channel 1 dial or leased lines to pass to the demarcation frame. The other coil, when energized, switches all four contacts of the relay to allow Channel 2 dial or leased lines to pass to the demarcation frame. Each coil receives a constant +28 V on one end. A +28 V RTN CTRL signal is supplied to the other end by the Product Generation Processor of the respective channel.

5.7.4 RELAY DRIVERS CIRCUIT BOARD ASSEMBLIES UD31A1 AND A2.

Relay driver circuit card assemblies (zones 3A, 3B) are provided to drive switching control signals from the Product Generation Processor of Channel 1 and Channel 2 to the relays in the Relay Box assembly. The Product Generation Processor of Channel 1 or Channel 2 sends out a momentary BIT 0 OUT signal to command the relays to switch its respective narrowband lines out to the demarcation frame. The BIT 0 OUT signal is output by the DIO card for Channel 1 or the DIO card for Channel 2 and this is input into the drivers in the Relay Driver circuit card assemblies A1 and A2. In each circuit card the signal is sent once through the driver and then reapplied as an input 15 times to produce 15 output signals, +28 V RTN CTRL. These momentary control signals are sent to the relays, where they provide the return signals that allow one of the two relay coils of each relay to momentarily energize and switch the contacts of the relays into the desired position. The contacts stay in this position until a momentary control signal from the other channel energizes the other coil of each relay.

5.7.5 FEEDBACK CONTROL RELAY K55.

Relay K55 (zone 2B) provides each channel's RPG with feedback that identifies which channel's narrowband lines are connected to the telephone company demarcation frame.

Relay K55 is identical to all other relays in the relay box. It has two coils that receive the same +28V RTN CTRL signals from Channels 1 and 2 as the other relays. Its contacts switch the same way at the same time as the contacts of the other relays. However, a set of its contacts close to enable a BIT 0 IN RTN signal received from the active channel to be returned to the active channel as BIT 0 IN. Reception of he BIT 0 IN signal is a confirmation to the active channel that all relays have switched properly.

The Channel 1 RPG processor continuously outputs a BIT 0 IN RTN signal, via its DIO card, to contact D2 of relay K55. Similarly, the Channel 2 RPG processor continuously outputs a BIT 0 IN RTN signal to contact C2 of relay K55. With Channel 1 active, contacts D2–D1 close to connect the Channel 1 BIT 0 IN RTN signal to the Channel 1 BIT 0 IN signal. Contacts C2–C3 open, disconnecting Channel 2's feedback signal, BIT 0 IN. With Channel 2 active, contacts D2–D1 open, disconnecting Channel 1's feedback signal, BIT 0 IN. Contacts C2–C3 close, connecting the Channel 2 BIT 0 IN RTN signal to the Channel 2 BIT 0 IN signal.

5.7.5.1 Telephone Demarcation. The telephone demarcation blocks (zone 1A, 1B) is mounted on the wall of the RDA/RPG shelter. These blocks interface the modem lines from the WSR–88D system to the commercial service provider(s). Each patch panel (one dial and one or two dedicated) will have a cable going to a unique demarcation block (after passing through the cabinet I/O panel and the relay box).

For the dial demarcation block, these are two wire circuits so two tabs on the demarcation block represent one circuit. So starting at the top, tabs one and two would be for dial line one, tabs three and four would be for dial line two, and so forth.

For the dedicated demarcation block, these are four wire circuits so four tabs on the demarcation block represent one circuit. So starting at the top, tabs one through four would be for dedicated line one, tabs five through eight would be for dedicated line two, and so forth. For the FAA system, leased line 17 (zone 1A) is the modem link to the MSCF, if frame relay service is not in use. Since each demarcation block can only be used for twelve dedicated circuits, the MSCF modem link for an FAA system is the fifth circuit on the second dedicated demarcation block, if frame relay service is not in use. If frame relay service is used, a smart jack will be provided for connecting to Relay Box UD31 jack 25.

Section 5.8. Base Data Distribution Server Functional Description

NOTE

This chapter and its corresponding sections refer to the RPGPCA as UD7. Unless otherwise specified for FAA redundant systems, this information also applies to RPGPCA UD170.

5.8.1 INTRODUCTION.

The BDDS receives a broadcast (BCAST) of the wideband data from the RPG processor and converts it to a unique, secure format for retransmission to the optional BDDS users. The BDDS is a stand–alone processor so that it can provide security between the RPG LAN and the BDDS user community. The bcast data is received on one network interface port via a BRECV process and that interface will communicate with the RPG LAN within one IP addressing domain (i.e., is on the same IP subnet address as the RPG). When the data is sent out a different network interface, it is “rebroadcast” on a separate subnet address. Since the BDDS is set so that it will not act as a router between the two network interfaces this creates a “security zone” exists between the RPG LAN and the BDDS user community.

In addition, the BDDS is developed as a Client–Server design. The BDDS will receive the retransmission of the wideband data (bcast) from the RPG processor. Then the BDDS applications software will convert this data to a unique format and “serve” the data (or actually just make it available) out of the secondary network interface. The server portion of this functionality is transmit–only and the BDDS users (the “clients”) should write their applications software to be receive–only and should not attempt to write to the BDDS. Regardless, any attempt by the clients to write to the BDDS is ignored by the BDDS; thus, this acts as the second “security zone” between the RPG LAN and the BDDS user community.

5.8.2 GENERAL DESCRIPTION.

The actual BDDS Processor is a Sun Ultra 5 processor assembly (UD70A1). It is a uniprocessor system that uses an UltraSPARC processor (400 MHz or faster). The UltraSPARC–IIi CPU supports high–performance 64 bit processing and uses PCI technology as the primary I/O bus. The BDDS Processor and peripherals, as described in Section 5.2, can be divided into the following functionalities:

- CPU
- Memory
- Internal Bus Structure
- Internal Peripherals
- I/O Connectors and External Interconnects
- PCI Cards and External Buses/Interconnects

- Serial Interconnect Functionality

These functions are described in paragraphs 5.8.3 through 5.8.9. Figure FO5−9, an overall functional block diagram of the BDDS Processor and peripherals, shows the composition of each function as well as the interrelationship between functions.

5.8.3 CPU.

The CPU is part of a CPU Module Assembly (UD70A1A1A5) (zone 2A) which mounts on and plugs into the Ultra 5 Motherboard (UD70A1A1A6). The actual Ultra 5 CPU is a UltraSPARC−IIi superscalar 400 MHz processor implementing a SPARC−V9 64−bit RISC architecture. The CPU module is capable of sustaining execution of up to four instructions per cycle even in the presence of conditional branches and cache misses. The CPU module has four integer execution units, three floating point execution units and two graphics execution units which supports 2D and 3D graphics, image processing, video compression/decompression, and video effects. Little−endian or big−endian byte ordering is selectable and the CPU supports power management (power saving) functions. The CPU module has 2 MB of cache and has four 256K x 18 SRAMs.

5.8.4 MEMORY.

The memory (zone 2A) consists of 168−pin 60 ns EDO 3.3.vdc DIMMs (Dual In−line Memory Module) plugged into motherboard sockets. The BDDS Processor Ultra 5 has two 128 MB DIMMs for a total of 256 MB. All memory addressing and control is driven from the CPU module by a MCU to the motherboard and then buffered to the DIMM DRAMs (Dynamic Random Access Memory). The MCU performs ECC generation and checking. DRAMS are designed so that data can be read or written in approximately the same amount of time for any memory location. The data path on the DRAM side for the actual DIMMs is 144−bits and the data is multiplexed to 72−bits wide on the processor side by use of transceiver switches. A 72−bit data bus exists between the CPU module and the Memory DRAM/DIMM area.

5.8.5 INTERNAL BUS STRUCTURE.

The motherboard uses PCI bus technology as the primary internal bus structure. The primary PCI bus from the processor is a 32−bit, 66 MHz, 3.3 vdc bus (zone 2A) and connects internally on the motherboard to an Advanced PCI Bridge (APB). The APB generates two secondary PCI busses:

1. PCI Bus A is a 32−bit, 33 MHz bus which is used on the four slot PCI Riser Assembly UD70A1A1A1 (zone 3B). PCI Bus A is a 5 vdc−only bus and only supports 5 vdc PCI boards.

2. PCI Bus B is a 32−bit, 33 MHz bus. Unlike bus A, it does not directly support any PCI slots; however, it does communicate with the other motherboard interface integrated circuits as follows:

a. Ultra ATA interface. The term Ultra ATA is synonymous with Enhanced Integrated Drive Electronics (EIDE). The Ultra ATA interface (zone 2B generates two logical EIDE bus channels with maximum transfer rates up to 16.67 MB per second. EIDE Channel 1 is interfaced off the motherboard on the J15 connector and is used for the hard drive (zone 2A). EIDE Channel 2 is interfaced off the motherboard on the J14 connector which has a separate EIDE bus cable going to the CD–ROM drive (UD70A1A1A3).

b. Graphics controller. The graphics controller (zone 3A) in the Ultra 5 provides 8–bit graphics with 2 MBs of SGRAM.

c. ASIC/EBus 2 interface. The ASIC (Applications–Specific Integrated Circuit)/EBus 2 interface (zone 3A) actually provides two unique type of interfaces. The ASIC portion of this functionality provides an ethernet channel engine through a buffered DMA MAC. The DMA engine has independent transmit/receive channels each with 2 Kbytes of on–chip buffering. The MAC provides a 10/100 Mbps ethernet protocol (conforming to IEEE 802–3, proposed IEEE 802.30, and Ethernet specifications) out the J2 network interface connector.

   The EBus2 interface generates the EBus 2 bus. Up to eight, 8–bit “Intel–style” devices can be connected to this bus. In this case, these “devices” are integrated onto the motherboard. The specific motherboard devices (zone 3A) used in this application are:

   - Super IO – Generates keyboard, mouse, parallel, and diskette (floppy) port functionalities.
   - NVRAM/TOD – Provides the NVRAM for storing system variables used by the boot PROM. The TOD functionality is the internal time keeping functionality.
   - Serial Controller – Generates two serial ports. Either port can handle asynchronous serial RS–232 communications up to rates of 430 Kbaud. Port A (but not port B) can also do synchronous serial RS–232 communications with external clock rates up to 460 Kbaud.
   - CODEC (not shown) – The CODEC is the built–in audio device to support the necessary analog–to digital conversions (e.g., microphone input) and digital–to–analog conversions (e.g., headphone output) for the system audio. The CD–ROM does have an input to this device and the internal mono speaker is also automatically attached as an output to this device.

5.8.6 INTERNAL PERIPHERALS.

The Ultra 5 supports a standard diskette drive (floppy), a CD–ROM drive, and one or two hard drives as follows:

1. Floppy Diskette Drive UD70A1A1A2(zone 2B) supports standard 3.5−inch diskettes and the Ultra 5 is designed to read either DOS− or Sun−formatted diskettes. The diskette drive bus is connected from motherboard connector J16 which is fed from an on−chip disketted controller which is part of the Super IO Controller functionality.

2. CD−ROM Drive UD70A1A1A3 (zone 2B) is a standard CD−ROM device. It is connected through an IDE ribbon bus cable to motherboard connector J14 which is fed from motherboard EIDE Channel 2. The CD−ROM drive also has a audio cable that connects to motherboard connector J9 (not shown).

3. Hard disk UD70A1A1A4 (zone 2A) is the primary system disk drive. This drive has a formatted capacity of at least 9 GB (newer models have higher capacity drives). Sun's disk management software uses approximately 400 MB of the disk space. This drive is connected through an IDE ribbon bus cable to motherboard connector J15 which is fed from motherboard EIDE Channel 1. Only one internal hard drive can be used on an Ultra 5 system.

5.8.7 I/O CONNECTORS AND EXTERNAL INTERCONNECTS.

For the BDDS Ultra 5 processor, the following I/O connectors (ports) are supported directly from the motherboard:

1. J1 (zone 3B) − Provides the keyboard/mouse DIN−8 type connection. In the case of the BDDS processor, this port is cabled to keyboard input 2 on the UD70A3 KVM switch (zone 1B, flow designator B).

2. J2 (zone 3A) − Provides the TPE RJ−45 type connector for ethernet connectivity to the RPG LAN. In this case, it is cabled directly to the LAN Switch. Under the Solaris OS, this is considered the "hme0" interface, or the primary network interface. This interface receives, via the LAN Switch), the TCP/IP rebroadcast (bcast) of the wideband data. From this data, the BDDS system will reformat the data to support BDDS users and then distribute this data out of the secondary network interface (see paragraph 5.8.8).

3. J3 (zone 3A) − Provides the Serial Port A, DB−25(F) connector. This serial port is not used during normal operation.

4. J4 (zone 3A) − Provides a 15−pin mini D−sub (HD15) connector for the graphics video output. In the case of the BDDS processor, this port is cabled to video input 2 on the UD70A3 KVM switch (zone 1B, flow designator A).

5. J7 (zone 3A) − Provides the Serial Port B, DB−9(M) connector. This serial port is not used during normal operation.

6. J8 (zone 3A) − Provides the parallel port functionality that would normally be used to connect a parallel printer. This port is not used on the BDDS Processor.

5.8.8 PCI CARDS AND EXTERNAL BUSSES/INTERCONNECTS.

The BDDS Ultra 5 processor can support up to three PCI cards plugged into PCI Riser Assembly UD70A1A1A1 (zone 3B). PCI card 1 is closest to the motherboard and would be towards the bottom when viewing the rear of the Ultra 5 processor. For the BDDS processor, only one PCI card is installed as follows:

1. PCI 1 – A combined Sun NIC/SCSI card. The NIC portion of the card supports the second ethernet connection from the BDDS system. Under the Solaris OS, this is considered the "hme1" interface or the secondary network interface. For the BDDS, this interface is cabled back to the LAN switch (zone 1B, flow designator C). This interface provides the uniquely–formatted base data generated by the BDDS. This data is sent to a Virtual LAN within the LAN Switch and then it is available for further distribution to the BDDS users. The SCSI output from the card is not used during normal operations; however, it will allow connection of the Jaz drive if desired for backup purposes.

2. PCI 2 – Not used.

3. PCI 3 – Not used.

5.8.9 SERIAL INTERCONNECT FUNCTIONALITY.

Neither of the two available motherboard serial ports are used during normal operation.

Section 5.9. Master System Control Function Workstation Functional Description

NOTE

This chapter and its corresponding sections refer to the RPGPCA as UD70. Unless otherwise specified for FAA redundant systems, this information also applies to RPGPCA UD170.

5.9.1 INTRODUCTION.

The MSCF functionality is a operator/machine interface that provides control over the WSR–88D system. The MSCF functionality primarily runs on the MSCF workstation but can also be executed from the RPG's workstation in the RPGPCA cabinets. The MSCF workstation is designed with a separate processor for several reasons. It is designed to initially be the control position for the Open Systems RPG. Second, a separate processor provides the graphics display capability independent from the actual RPG or RDA processors. And lastly, the MSCF processor provides a dial–in access point to the system independent of the other processors. All of this helps to segregate the control position processing loads away from the main RPG processor.

For the RPG system, the MSCF workstation is primarily used to display the RPG's HCI. This is the RPG applications level software graphics display used to control and monitor the RPG, the RDA through the wideband interface, and all narrowband communications. It allows for the selection of products to be routinely generated and a product subset to be archived.

The MSCF workstation is also used to display the "MSCF Display". This display starts automatically as soon as an operator logs into the CDE at the MSCF workstation. It is used to actually start the RPG's HCI and also to provide graphical selections for power control and communications status monitoring. The MSCF workstation also provides the interface to access the operating system, initialize the RPG processor, and perform first level analysis of system malfunctions through telnet network–level sessions if necessary.

5.9.2 GENERAL DESCRIPTION.

The actual MSCF Processor is a Sun Ultra 5 processor assembly (UD71A1). It is a uniprocessor system that uses an UltraSPARC processor (400 MHz or faster). The UltraSPARC–IIi CPU supports high–performance 64–bit processing and uses PCI technology as the primary I/O bus. The MSCF Processor and peripherals, as described in Section 5.2, can be divided into the following functionalities

- CPU
- Memory
- Internal Bus Structure
- Internal Peripherals
- I/O Connectors and External Interconnects

- PCI Cards and External Buses/Interconnects
- Serial Interconnect Functionality

These functions are described in paragraphs 5.9.3 through 5.9.9. Figure FO5–10, an overall functional block diagram of the MSCF Processor and peripherals, shows the composition of each function as well as the interrelationship between functions.

5.9.3 CPU.

The CPU is part of a CPU Module Assembly (UD71A1A1A5) (zone 2A) which mounts on and plugs into the Ultra 5 Motherboard (UD71A1A1A6). The actual Ultra 5 CPU is a UltraSPARC–IIi superscalar 400 MHz processor implementing a SPARC–V9 64–bit RISC architecture. The CPU module is capable of sustaining execution of up to four instructions per cycle even in the presence of conditional branches and cache misses. The CPU module has four integer execution units, three floating point execution units and two graphics execution units which supports 2D and 3D graphics, image processing, video compression/decompression, and video effects. Little–endian or big–endian byte ordering is selectable and the CPU supports power management (power saving) functions. The CPU module has 2 MB of cache and has four 256K x 18 SRAMs.

5.9.4 MEMORY.

The memory (zone 2A) consists of 168–pin 60 ns EDO 3.3.vdc DIMMs (Dual In–line Memory Module) plugged into motherboard sockets. The MSCF Processor Ultra 5 has two 128 MB DIMMs for a total of 256 MB. All memory addressing and control is driven from the CPU module by a MCU to the motherboard and then buffered to the DIMM DRAMs (Dynamic Random Access Memory). The MCU performs ECC generation and checking. DRAMS are designed so that data can be read or written in approximately the same amount of time for any memory location. The data path on the DRAM side for the actual DIMMs is 144 bits and the data is multiplexed to 72 bits wide on the processor side by use of transceiver switches. A 72–bit data bus exists between the CPU module and the Memory DRAM/DIMM area.

5.9.5 INTERNAL BUS STRUCTURE.

The motherboard uses PCI bus technology as the primary internal bus structure. The primary PCI bus from the processor is a 32–bit, 66 MHz, 3.3 vdc bus (zone 2A) and connects internally on the motherboard to an Advanced PCI Bridge (APB). The APB generates two secondary PCI busses:

1. PCI Bus A is a 32–bit, 33 MHz bus which is used on the four slot PCI Riser Assembly UD71A1A1A1 (zone 3B). PCI Bus A is a 5 vdc–only bus and only supports 5 vdc PCI boards.

2. PCI Bus B is a 32−bit, 33 MHz bus. Unlike bus A, it does not directly support any PCI slots; however, it does communicate with the other motherboard interface integrated circuits as follows:

   a. Ultra ATA interface. The term Ultra ATA is synonymous with Enhanced Integrated Drive Electronics (EIDE). The Ultra ATA interface (zone 2B) generates two logical EIDE bus channels with maximum transfer rates up to 16.67 MB per second. EIDE Channel 1 is interfaced off the motherboard on the J15 connector and is used for the hard drive (zone 2A). EIDE Channel 2 is interfaced off the motherboard on the J14 connector which has a separate EIDE bus cable going to the CD−ROM drive (UD71A1A1A3).

   b. Graphics controller. The graphics controller (zone 3A) in the Ultra 5 provides 8−bit graphics with 2 MB of SGRAM.

   c. ASIC/EBus 2 interface. The ASIC (Applications−Specific Integrated Circuit)/EBus 2 interface (zone 3A) actually provides two unique type of interfaces. The ASIC portion of this functionality provides an ethernet channel engine through a buffered DMA) MAC. The DMA engine has independent transmit/receive channels each with 2 Kbytes of on−chip buffering. The MAC provides a 10/100 Mbps ethernet protocol (conforming to IEEE 802−3, proposed IEEE 802.30, and Ethernet specifications) out the J2 network interface connector.

      The EBus2 interface generates the EBus 2 bus. Up to eight, 8−bit “Intel−style” devices can be connected to this bus. In this case, these “devices” are integrated onto the motherboard. The specific motherboard devices (zone 3A) used in this application are:

      - Super IO − Generates keyboard, mouse, parallel, and diskette (floppy) port functionalities.

      - NVRAM/TOD − Provides the NVRAM for storing system variables used by the boot PROM. The TOD functionality is the internal time keeping functionality.

      - Serial Controller − Generates two serial ports. Either port can handle asynchronous serial RS−232 communications up to rates of 430 Kbaud. Port A (but not port B) can also do synchronous serial RS−232 communications with external clock rates up to 460 Kbaud.

      - CODEC (not shown) − The CODEC is the built−in audio device to support the necessary analog−to digital conversions (e.g., microphone input) and digital−to−analog conversions (e.g., headphone output) for the system audio. The CD−ROM does have an input to this device and the internal mono speaker is also automatically attached as an output to this device.

5.9.6 INTERNAL PERIPHERALS.

The Ultra 5 supports a standard diskette drive (floppy), a CD–ROM drive, and one or two hard drives as follows:

1. Floppy Diskette Drive UD71A1A1A2 (zone 2B) supports standard 3.5–inch diskettes and the Ultra 5 is designed to read either DOS– or Sun–formatted diskettes. The diskette drive bus is connected from motherboard connector J16 which is fed from an on–chip disketted controller which is part of the Super IO Controller functionality

2. CD–ROM Drive UD71A1A1A3 (zone 2B) is a standard CD–ROM device. It is connected through an IDE ribbon bus cable to motherboard connector J14 which is fed from motherboard EIDE Channel 2. The CD–ROM drive also has a audio cable that connects to motherboard connector J9 (not shown).

3. Hard disk UD71A1A1A4 (zone 2A) is the primary system disk drive. This drive has a formatted capacity of at least 9 GB (newer models have higher capacity drives). Sun's disk management software uses approximately 400 MB of the disk space. This drive is connected through an IDE ribbon bus cable to motherboard connector J15 which is fed from motherboard EIDE Channel 1. Only one internal hard drive can be used in an Ultra 5 system.

5.9.7 I/O CONNECTORS AND EXTERNAL INTERCONNECTS.

For the MSCF Ultra 5 processor, the following I/O connectors (ports) are supported directly from the motherboard:

1. J1 (zone 3B) – Provides the keyboard/mouse DIN–8 type connection. In the case of the MSCF processor, this port is cabled directly to the UD71A3 keyboard.

2. J2 (zone 3A) – Provides the TPE RJ–45 type connector for ethernet connectivity to a LAN. For NWS systems, this connector is cabled indirectly to LAN Switch UD70A13 through the RPG cabinet I/O entry panel. For DoD and FAA systems, this connector is used for the ethernet connection to the UD79A1 printer.

3. J3 (zone 3A) – Provides the Serial Port A, DB–25(F) connector. See paragraph 5.9.9 for a further details on actual serial port interconnectivity.

4. J4 (zone 3A) – Provides a 15–pin mini D–sub (HD15) connector for the graphics video output. In the case of the MSCF processor, this port is cabled directly to the UD71A2 MSCF Monitor.

5. J7 (zone 3A) – Provides the Serial Port B, DB–9(M) connector. See paragraph 5.9.9 for a further details on actual serial port interconnectivity.

6. J8 (zone 3A) – Not used.

5.9.8 PCI CARDS AND EXTERNAL BUSSES/INTERCONNECTS.

The MSCF Ultra 5 processor can support up to three PCI cards plugged into PCI Riser Assembly UD71A1A1A1 (zone 3B). PCI card 1 is closest to the motherboard and would be towards the left side when viewing the rear of the Ultra 5 processor. For the MSCF processor, two cards are installed as follows:

1. PCI 1 −Dial modem card. This card will allow for the dial−in support of a "remote" user (laptop, RDA RRRAT, support center, etc.). A local dial phone line is connected to the "LINE" port of this modem

2. PCI 2 − Not used.

3. PCI 3 − A Sun SCSI host adapter card. At a desired aggregate data transfer rate of 40 MB/sec, this SCSI adapter card can support up to 14 external SCSI devices. The card has two Ultra−SCSI type connectors that can generate two separate physical SCSI busses and seven SCSI devices could be connected to each bus. Only Connector 0 is used for the RPG processor and it can support seven devices, with device ID numbers (or "target numbers") of 0 through F (Hex,15 decimal) excluding ID 7. ID seven is always reserved for the card itself. For the MSCF, the only device connected to this bus is the Jaz Drive (UD71A6) used for backup purposes. The Jaz Drive ID is set to "3".

5.9.9 SERIAL INTERCONNECT FUNCTIONALITY.

For the serial ports on the motherboard (designated "A" and "B"), the following functionality exists:

- Serial Port A − This serial port is used for connection of an MSCF link to DoD or FAA RPGs, if frame relay service is not used. It is not normally used at an NWS MSCF.

- Serial Port B − Not normally used.

Section 5.10. Remote RDA Maintenance Terminal Functional Description

NOTE

This chapter and its corresponding sections refer to the RPGPCA as UD70. Unless otherwise specified for FAA redundant systems, this information also applies to RPGPCA UD170.

5.10.1 INTRODUCTION.

The Remote RDA Maintenance Terminal is used in NWS redundant systems. It reports to the RPG but physically interacts with the RDASC processor of either Channel 1 or Channel 2. The Remote RDA Maintenance Terminal enables the operator to enter control commands to the RDASC processor, perform RDA Systems Operational Tests, and request operational status. It connects to the Channel 1 RDA, UD105, via a narrowband, dial–line link. A STATMUX UD105A20 multiplexes the systems and applications ports from the Channel 2 RDASC UD5A12 and the Channel 1 RDASC UD105A12 onto the dial–line link. Dial Port modem UD105A21 sends the information to the Remote RDA Maintenance Terminal via a narrowband link. The Remote RDA Maintenance Terminal contains dial–line modem UD32A4 and STATMUX UD32A3 which complete the link. STATMUX UD32A3 outputs the applications and systems ports of Channel 1 and Channel 2 to Dual A/B Switch UD32A2. The switch feeds the applications and systems ports of one of the channels to Remote RDA Maintenance Terminal CPU UD32A9.

5.10.2 REMOTE RDA MAINTENANCE TERMINAL MONITOR UD32A10.

The Terminal Monitor UD32A10 is a standard CPU terminal containing a keyboard and CRT display. It has the capability to communicate with two asynchronous full duplex, RS–232 ports. The operator has the ability to alternately display and interface with either of these ports.

5.10.3 DUAL A/B SWITCH UD32A2.

Dual A/B switch UD32A2 contains four input ports and two output ports. Each output port is connected to a pair of input ports by one of two switches. Both switches are switched concurrently by a knob on the outside of the switch. One switch receives the applications port of Channel 1 and Channel 2 and the other switch receives the systems port of Channel 1 and Channel 2. Data flow is bi–directional, wherein there are two input ports and four output ports.

5.10.4 STATMUX UD32A3.

The Remote RDA Maintenance Terminal uses two ports for communication, either the system port and the applications port of RDA Channel 1 or the system port and the application port of RDA Channel 2. STATMUX UD32A3 is a bi–directional device that multiplexes these ports together into a single, time–shared port for transmission to RDA UD105. The STATMUX also demultiplexes a single, time shared port received from RDA UD105 into four ports. The ports of the STATMUX are defined as follows: the multiplexed I/O port is called the DCE port, and the single I/O ports are called the DTE ports. The DCE port data is passed through Dial Port modem UD32A4 and then out the dial–up phone line to RDA UD105. The DTE ports of the STATMUX operate in asynchronous mode while the DCE port operates in synchronous mode.

5.10.5 DIAL−PORT MODEM UD32A4.

Dial Port modem UD32A4 is used to communicate with dial port modem UD105A21 in RDA Channel 1.

Section 5.11. Power Distribution

NOTE

This chapter and its corresponding sections refer to the RPGPCA as UD70. Unless otherwise specified for FAA redundant systems, this information also applies to RPGPCA UD170.

5.11.1 INTRODUCTION.

This section discusses the power distribution for the RPG Group equipment. Throughout this section, see Figure FO7–6 through Figure FO7–9. The RPG power distribution functions discussed in this section are listed as follows:

- MSCF Group Assembly Power Distribution
- NWS Redundant Systems Remote RDA Maintenance Terminal Power Distribution
- RPGPCA Cabinet Power Distribution (NWS and DoD)
- RPGPCA Cabinet Power Distribution (FAA Redundant)

5.11.2 MSCF GROUP ASSEMBLY POWER DISTRIBUTION.

The MSCF Group equipment (Figure FO7–6) receives its power of 120 Vac, 3ϕ, 60 Hz from the site power source. The following equipment makes up the MSCF:

- MSCF Printer Assembly
- MSCF Workstation Assembly
- Frame Relay Hub Router

5.11.2.1 MSCF Printer Assembly. The printer assembly consists of the printer stand UD79MP1 and the color printer UD79A1. The printer, as with other MSCF equipment, requires 120 Vac for operation.

5.11.2.2 MSCF Workstation Assembly. The MSCF workstation assembly consists of the following:

- MSCF Terminal Suite (Processor, Monitor, Keyboard, and Mouse) UD71A1, UD71A2, UD71A3, UD71A4
- Dedicated Port Modem UD71A5
- Jaz Backup Storage Device UD71A6
- Frame Relay Hub Router UD75

Workstation assembly equipment requires only 120 Vac for operation, which is distributed through the J1 power strip (may also be distributed through the 71E1 surge suppressor assembly). The dedicated modem (UD71A5) is used when the MSCF is remotely located from the RPGPCA. The Jaz backup storage device is used for software backup purposes.

5.11.3 NWS REDUNDANT SYSTEMS REMOTE RDA MAINTENANCE TERMINAL POWER DISTRIBUTION.

The Remote RDA Maintenance Terminal (Figure FO7–7) is present only in NWS redundant systems. It receives its power of 120 Vac, 1ϕ, 60 Hz from the site power source via a power strip. The following equipment makes up the Remote RDA Maintenance Terminal:

- CPU/Terminal, UD32A9/A10
- STATMUX, UD32A3
- Dedicated Port Modem, UD32A4

5.11.4 RPGPCA CABINET POWER DISTRIBUTION (NWS AND DoD).

The RPG Processor Power Subsystem converts on–line AC power to power suitable for the system. The modular design of the power subsystem facilitates power subsystem expansion and convenient on–site replacement of modules. See Figure FO7–8.

The power subsystem consists of the following components:

- AC Line Filter
- AC Power Distribution Panel
- APC UPS
- APC MasterSwitch Power Administrator
- Power Strip, J23

5.11.4.1 AC Line Filter and Power Distribution Unit. Primary 208 Vac, 3ϕ input power is supplied to RPGPCA Cabinet UD70 via power filter UD70FL1 (Figure FO7–8, zone 4B). This filter reduces the radiated and conducted emissions of the cabinet and distributes 2ϕ AC voltage to the AC Power Distribution Panel UD70A22 (zones 1A, 1B) and 1ϕ AC voltage to the power strip J23 (zones 3A, 3B). The AC Power Distribution Panel (PDP) primarily supplies power to the UPS UD70A11 (zone 1B) through outlet J1. The PDP also directly supplies AC power to the Color Monitor UD70A4 (zone 2A) through outlet J2. All power supplied from the PDP, and discussed hereafter, is 1ϕ, 120 Vac power.

5.11.4.2 UPS. The APC UPS UD70A11 primarily supplies power to the MasterSwitch Power Administrator UD70A10 (zone 2B). However, it also directly supplies power to the KVM Switch UD70A3 (zone 1B, only installed if BDDS UD70A1 is present in the cabinets) and to the Jaz Drive UD70A8 and optional expansion Jaz Drive UD70A9 (zones 2A, 1A). The UPS provides battery

backup power to the critical RPG equipment. It will provide this backup power for approximately 25 minutes following loss of incoming AC power. When a "Low Battery" condition is noted, it will command the BDDS processor (if installed within RPGPCA) to a shutdown state via SNMP commands over the TCP/IP interface and then shut down the RPG Processor through its serial link to the processor (See Figure FO5−4 and paragraph 5.3.4.1). This is all configured as part of the UPS PowerChute monitoring/control software. It performs these actions prior to actual lose of AC power so that the processors are shut down in a logical manner. When incoming AC power is restored, both processors automatically boot based upon the restoral of power.

5.11.4.3 MasterSwitch Power Administrator. The APC MasterSwitch Power Administrator provides AC power to the following devices (as indexed by the outlet used):

1. RPG Processor UD70A7 (zone 2B)
2. LAN Switch UD70A13 (zone 3B)
3. Router UD70A2 (zone 2A)
4. Communications Server A UD70A15 (zone 3B)
5. RDA/RPG Gateway UD70A12 (zone 2B)
6. BDDS UD70A1 (zone 2A)
7. Communications Server B UD70A16 (zone 3A)
8. Communications Server C UD70A16 (zone 3A)

As previously indicated on Figure FO5−4 and discussed in paragraph 5.3.4.2, each outlet of this power administrator can be controlled through either an in−bandwidth TCP/IP ethernet connection or through an out−of−bandwidth serial connection. Though these control sessions (e.g., telnet, web browser, etc.), power to any specific outlet can be turned off, turned on, or "rebooted" (off for 5 seconds, then back on). If ethernet control of any of the six devices connected to the power administrator is lost due to some type of "hang" within the device, restoration of that device may be achieved through a "reboot" of the AC power to that specific outlet without impacting the other five devices.

5.11.4.4 Power Strip J23. Power Strip J23 supplies 120 Vac Power directly to the less critical RPG components (zones 3A, 3B):

- RS−232/422 Converter UD70A20 (NWS only)
- CSU UD70A18 (NWS only)
- Modems Rack UD70A14
- Cabinet fans

5.11.5 RPGPCA CABINET POWER DISTRIBUTION (FAA REDUNDANT).

The RPG Processor Power Subsystem converts on−line AC power to power suitable for the system. The modular design of the power subsystem facilitates power subsystem expansion and convenient on−site replacement of modules. See Figure FO7−9.

The power subsystem consists of the following components:

- AC Line Filter
- AC Power Distribution Panel
- APC UPS
- APC MasterSwitch Power Administrator
- Baytech RMS Power Administrators
- Power Strip, J23

5.11.5.1 AC Line Filter and Power Distribution Unit. Primary 208 Vac, 3ϕ input power is supplied to RPGPCA Cabinet UD70 via power filter UD70FL1 (Figure FO7–9, zone 4B). This filter reduces the radiated and conducted emissions of the cabinet and distributes 2ϕ AC voltage to the AC Power Distribution Panel UD70A22 (zones 1A, 1B) and 1ϕ AC voltage to the power strip J23 (zones 3A, 3B). The AC Power Distribution Panel (PDP) primarily supplies power to the UPS UD70A11 (zone 1B) through outlet J1. The PDP also directly supplies AC power to the Color Monitor UD70A4 (zone 2A) through outlet J2. All power supplied from the PDP, and discussed hereafter, is 1ϕ, 120 Vac power.

5.11.5.2 UPS. The APC UPS UD70A11 primarily supplies power to the MasterSwitch Power Administrator UD70A10 (zone 2B). However, it also directly supplies power to the Jaz Drive UD70A8 and optional expansion Jaz Drive UD70A9 (zones 2A, 1A). The UPS provides battery backup power to the critical RPG equipment. It will provide this backup power for approximately 25 minutes following loss of incoming AC power. When a “Low Battery” condition is noted, it will shut down the RPG Processor through its serial link to the processor (See Figure FO5–4 and paragraph 5.3.4.1). This is all configured as part of the UPS PowerChute monitoring/control software. It performs these actions prior to actual lose of AC power so that the RPG processor is shut down in a logical manner. When incoming AC power is restored, the RPG processor automatically boots based upon the restoral of power.

5.11.5.3 MasterSwitch Power Administrator. The APC MasterSwitch Power Administrator provides AC power to the following devices (indexed by the outlet used) as routed directly through the Baytech Power Administrators (discussed below):

1. RPG Processor UD70A7 (zone 2B)
2. LAN Switch UD70A13 (zone 3B)
3. Router UD70A2 (zone 2A)
4. Communications Server A UD70A15 (zone 3B)
5. RDA/RPG Gateway UD70A12 (zone 2B)
6. Not used.
7. Communications Server B UD70A16 (zone 3B)
8. Communications Server C UD70A16 (zone 3B)

As previously indicated on Figure FO5–4 and discussed in paragraph 5.3.4.2, each outlet of this power administrator can be controlled through either an in–bandwidth TCP/IP ethernet connection or through an out–of–bandwidth serial connection. Though these control sessions (e.g., telnet, web browser, etc.), power to any specific outlet can be turned off, turned on, or "rebooted" (off for 5 seconds, then back on). If ethernet control of any of the six devices connected to the power administrator is lost due to some type of "hang" within the device, restoration of that device may be achieved through a "reboot" of the AC power to that specific outlet without impacting the other five devices.

5.11.5.4 Baytech RMS Power Administrators. For FAA systems, the RMS Power Administrators provide secondary control of the AC power to the five supported devices.

- The "A" unit provides AC power to the following components (as indexed by the outlet used):
  1. RPG Processor UD70A7 (zone 2B)
  2. LAN Switch UD70A13 (zone 3B)
  3. Router UD70A2 (zone 2A)
  4. Communications Server A UD70A15 (zone 3B)
- The "B" unit provides AC power to the following components (as indexed by the outlet used):
  1. RDA/RPG Gateway UD70A12 (zone 3B)
  2. Not used.
  3. Communications Server B UD70A16 (zone 3B)
  4. Communications Server C UD70A17 (zone 3B)

As previously indicated on Figure FO5–4 and discussed in paragraph 5.3.4.3, these power administrators are controlled through serial connections from the RMS. Like the MasterSwitch, the individual power outlets can be controlled from the RMS and power can be removed/restored to any specific outlet. Thus, if ethernet control of any of the five devices connected to the power administrators is lost due to some type of "hang" within the device, restoration of that device may be achieved through a "reboot" of the AC power to that specific outlet without impacting the other four devices.

5.11.5.5 Power Strip J23. Power Strip J23 supplies 120 Vac Power directly to the less critical RPG components (zones 3A, 3B):

- 28 vdc relay box power supply
- Modems Rack UD70A14
- Cabinet fans

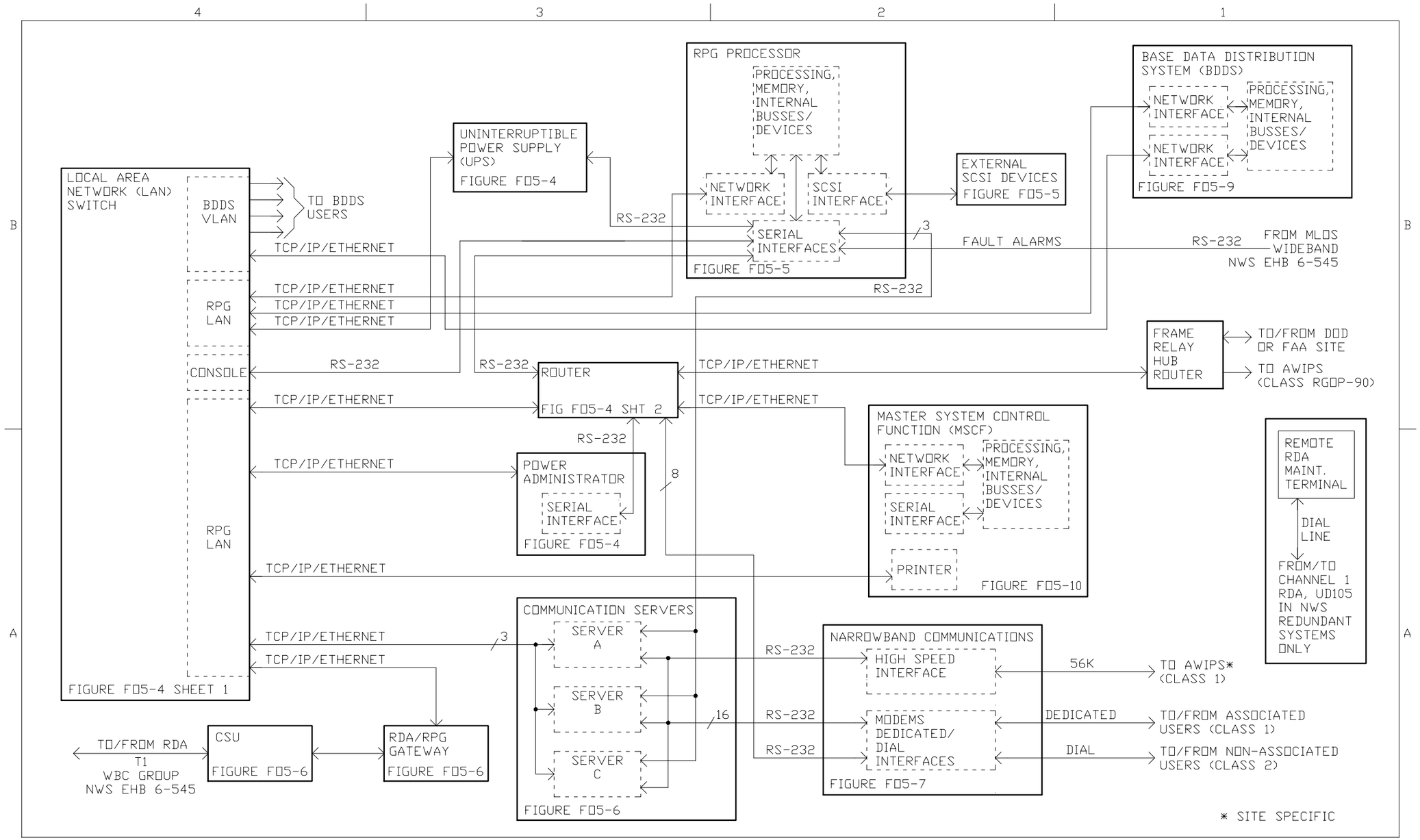

Figure FO5–1. RPG Simplified Block Diagram (NWS)

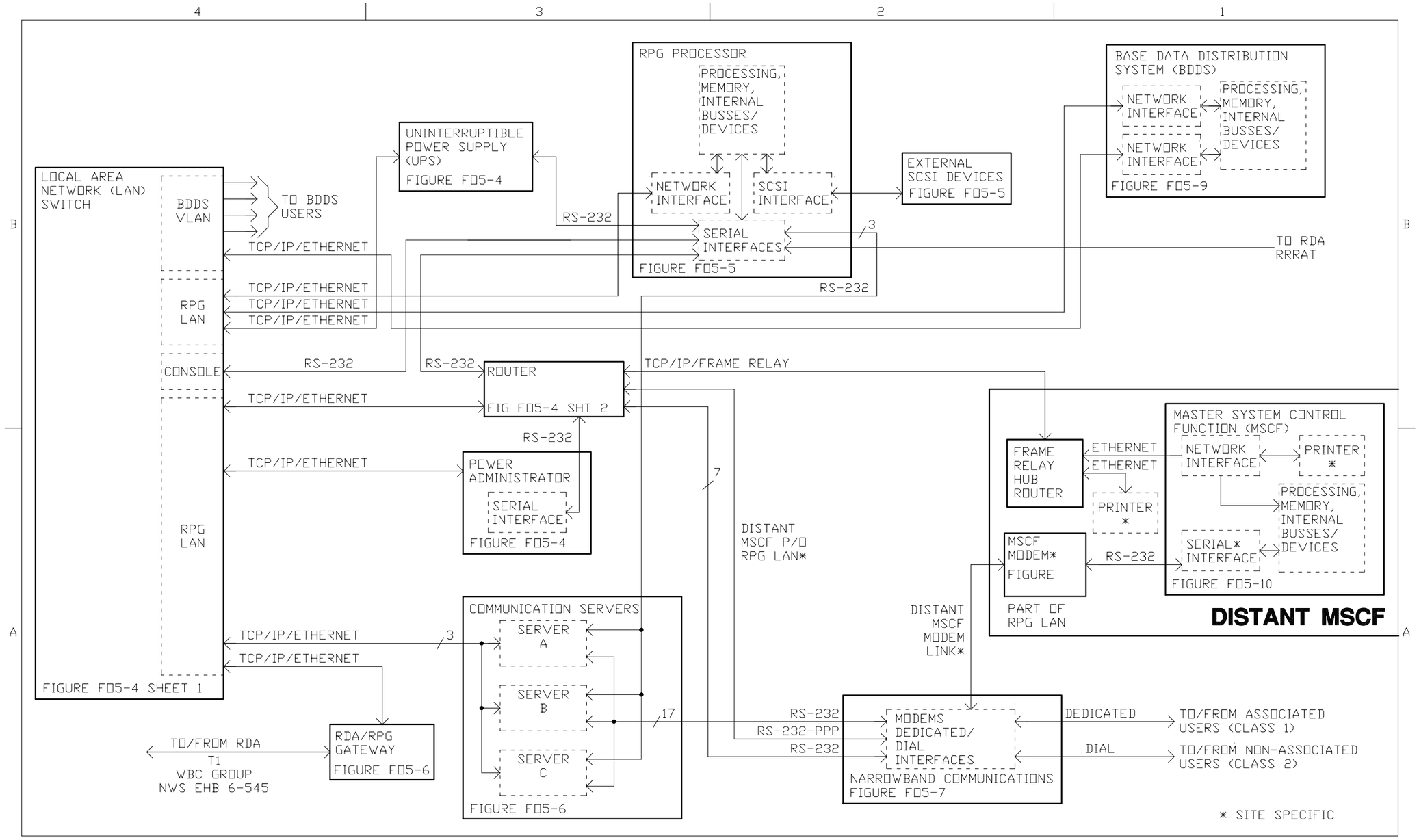

Figure FO5-2. RPG Simplified Block Diagram (DoD)

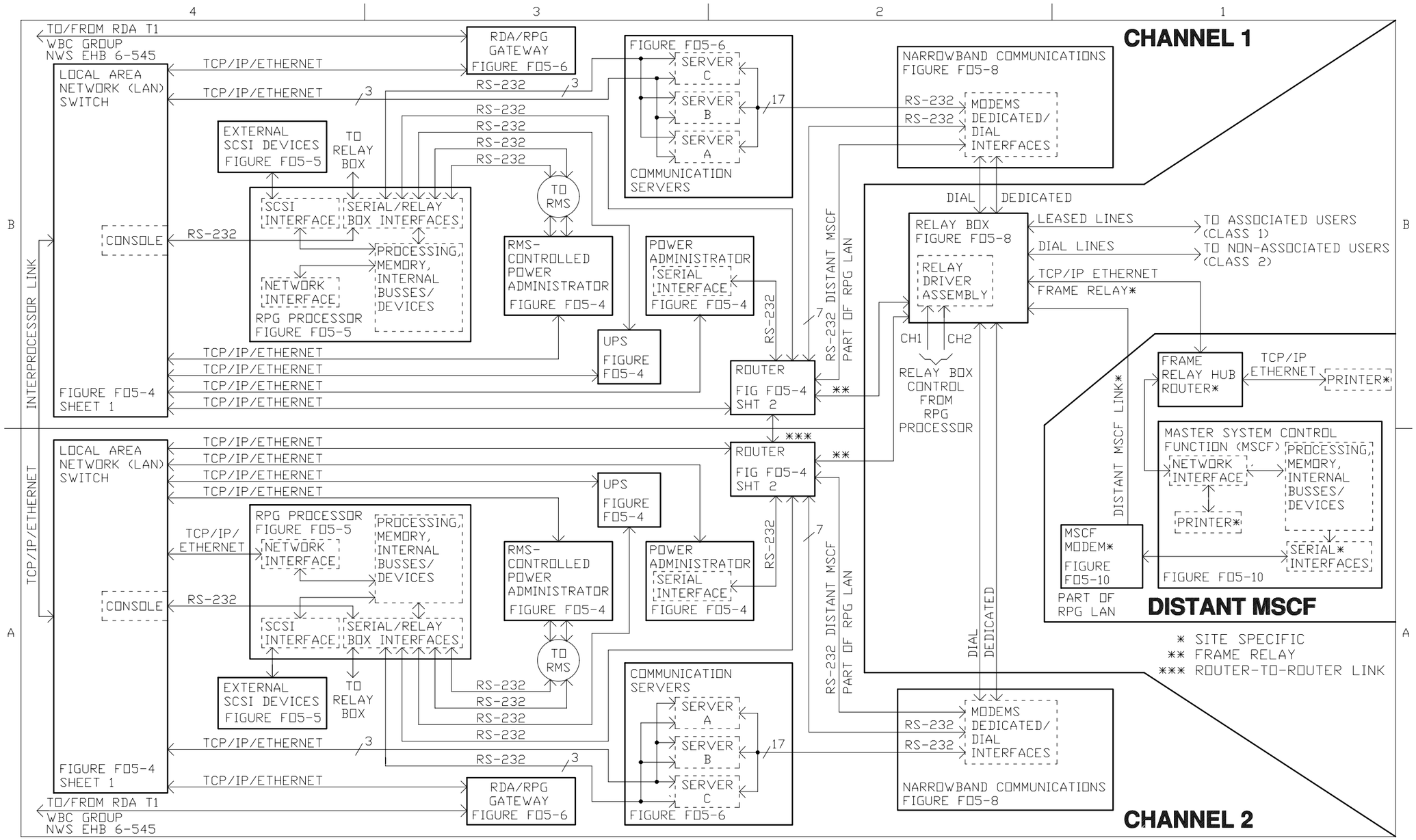

Figure FO5–3. RPG Simplified Block Diagram (FAA Redundant)

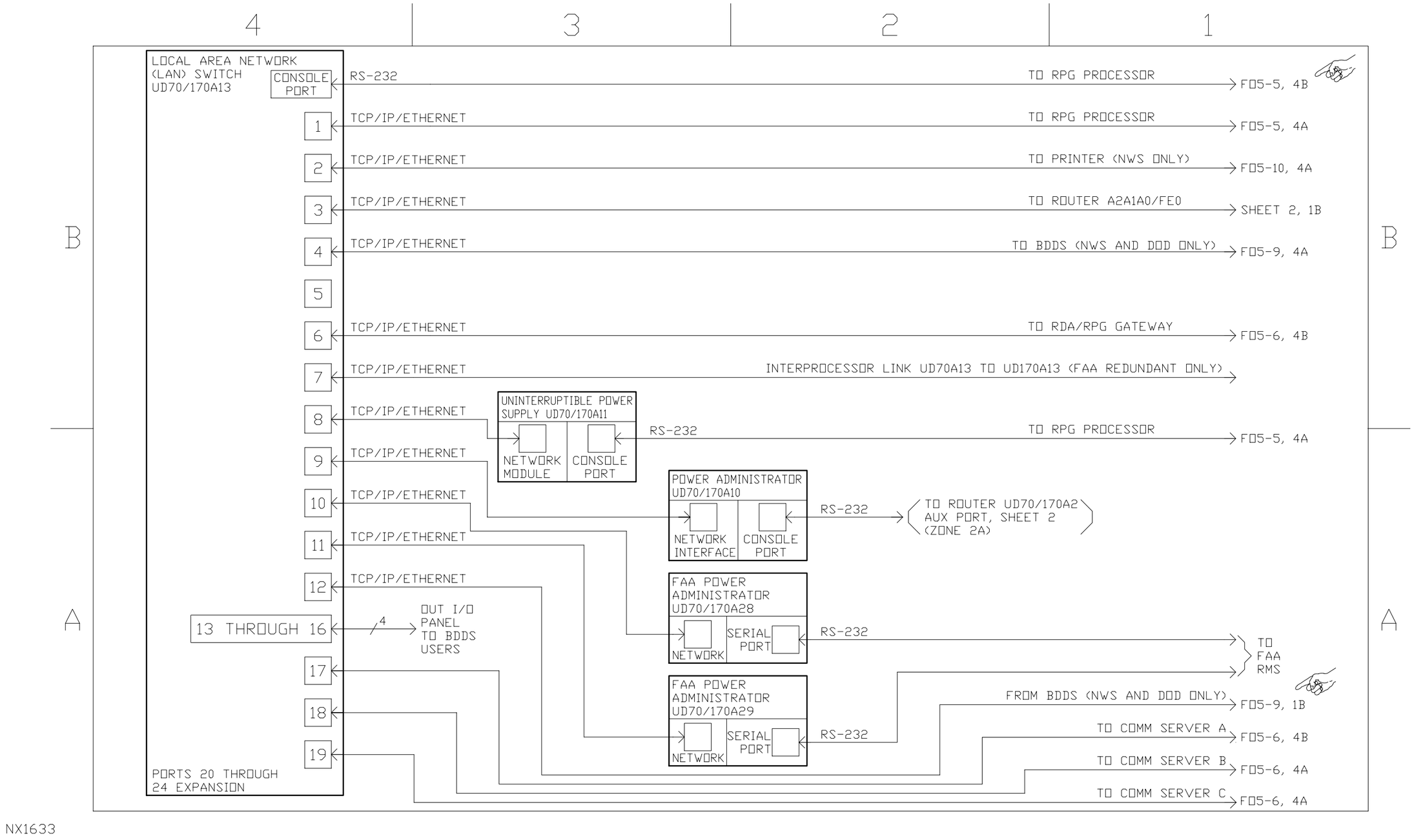

Figure FO5–4. Local Area Network, Power Administration, and Router Functional Block Diagram (Sheet 1 of 2)

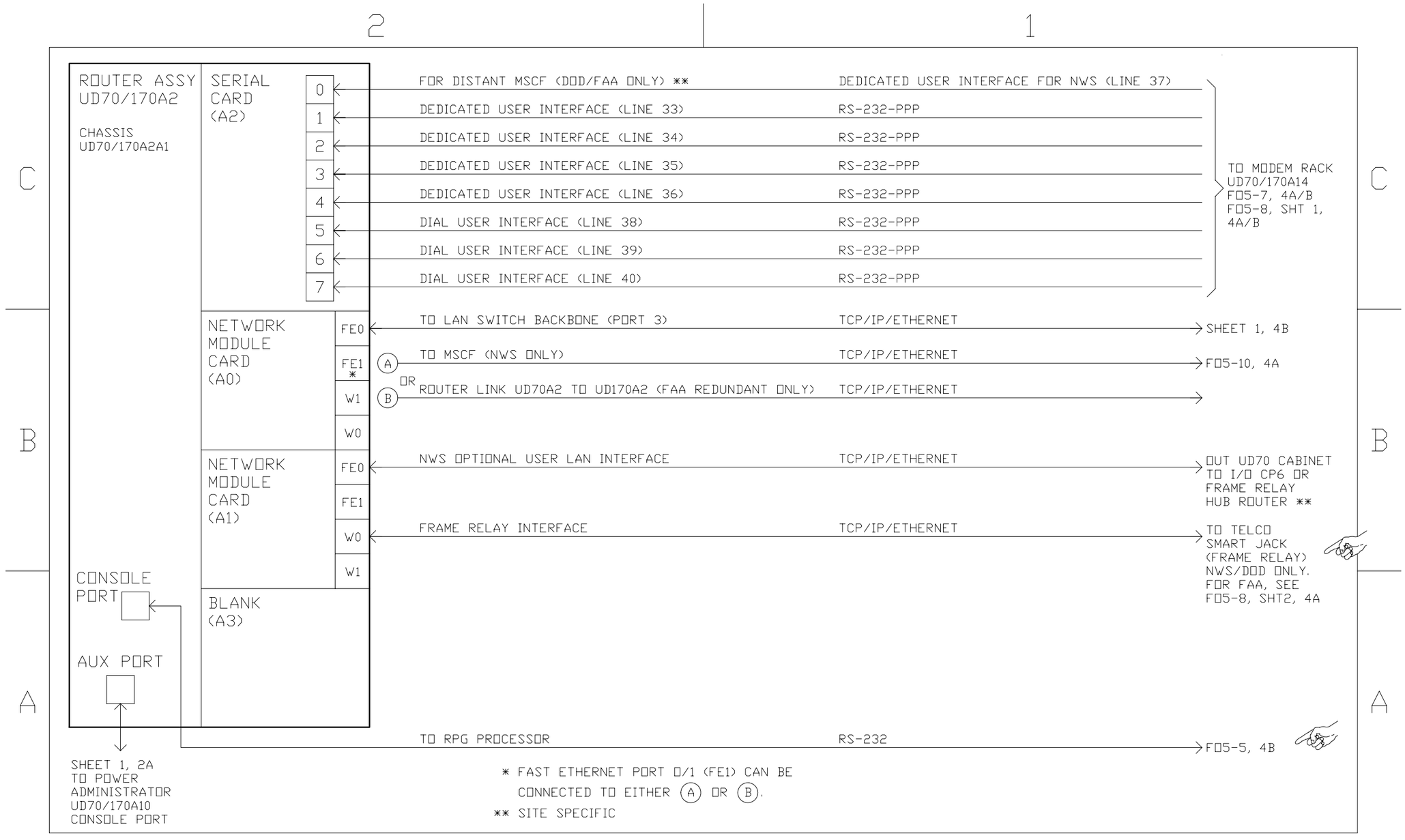

Figure FO5-4. Local Area Network, Power Administration, and Router Functional Block Diagram (Sheet 2 of 2)

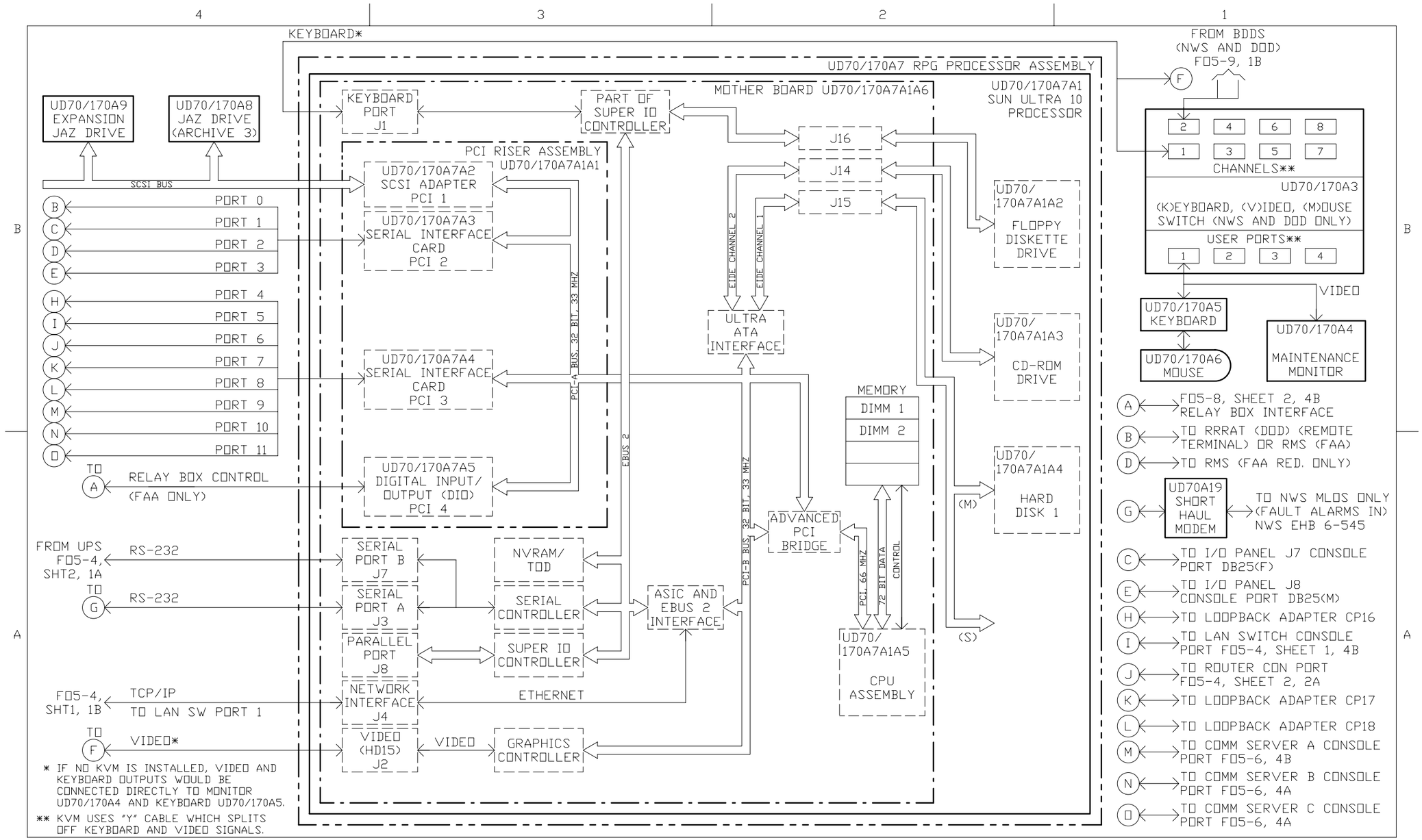

Figure FO5-5. RPG Processor Functional Block Diagram

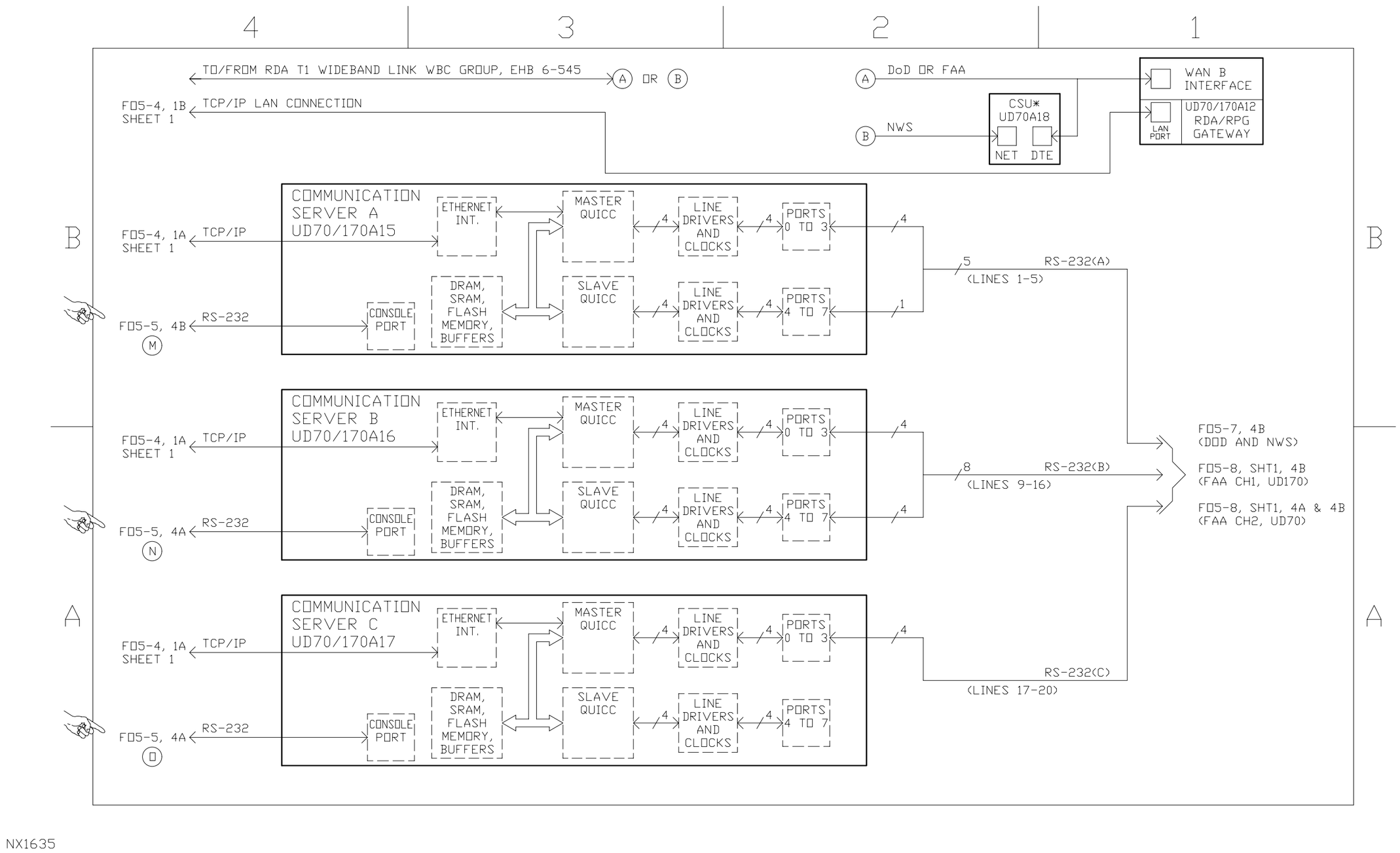

Figure FO5–6. Communications Interface Functional Block Diagram

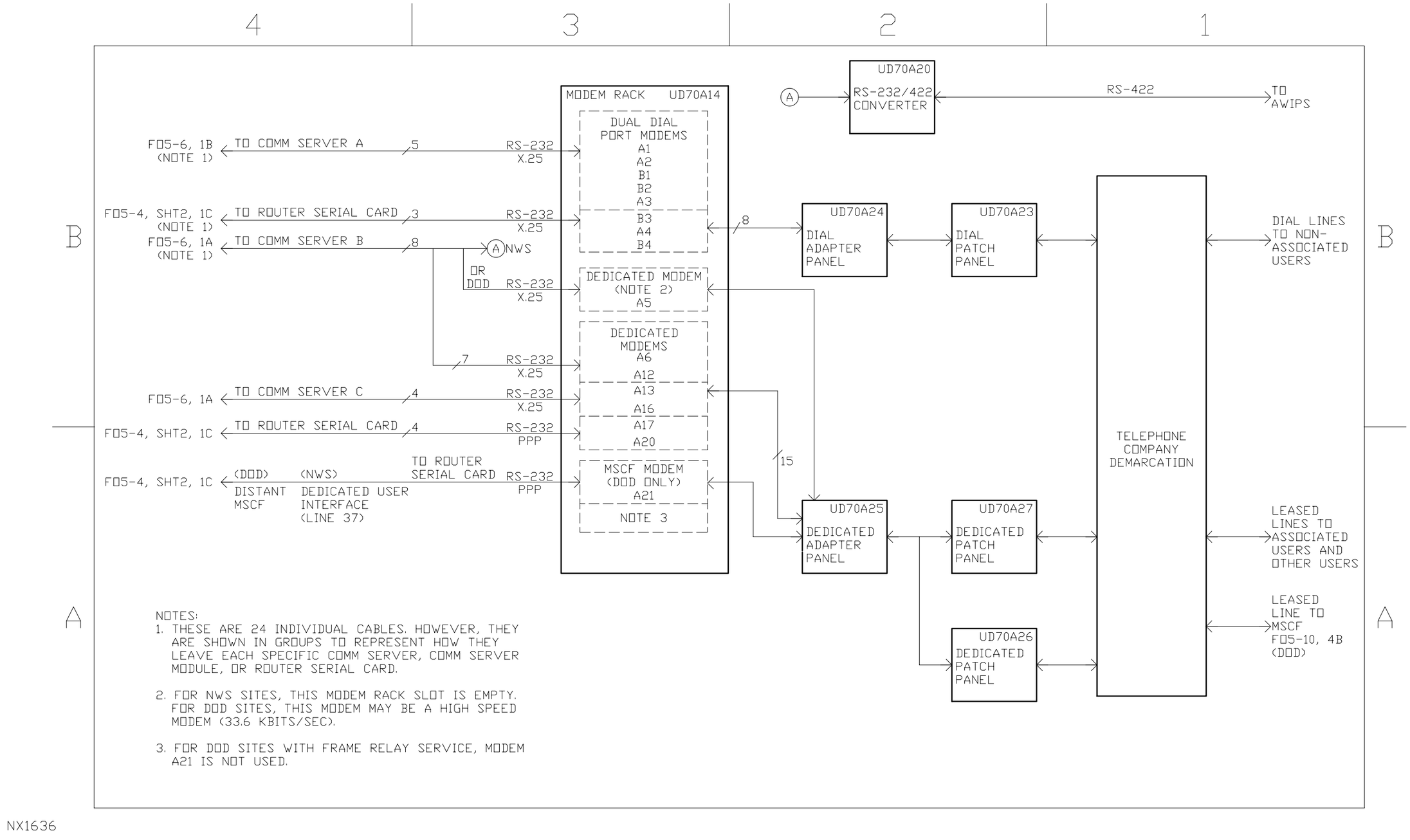

Figure FO5–7. Narrowband Communications Functional Block Diagram (NWS and DoD)

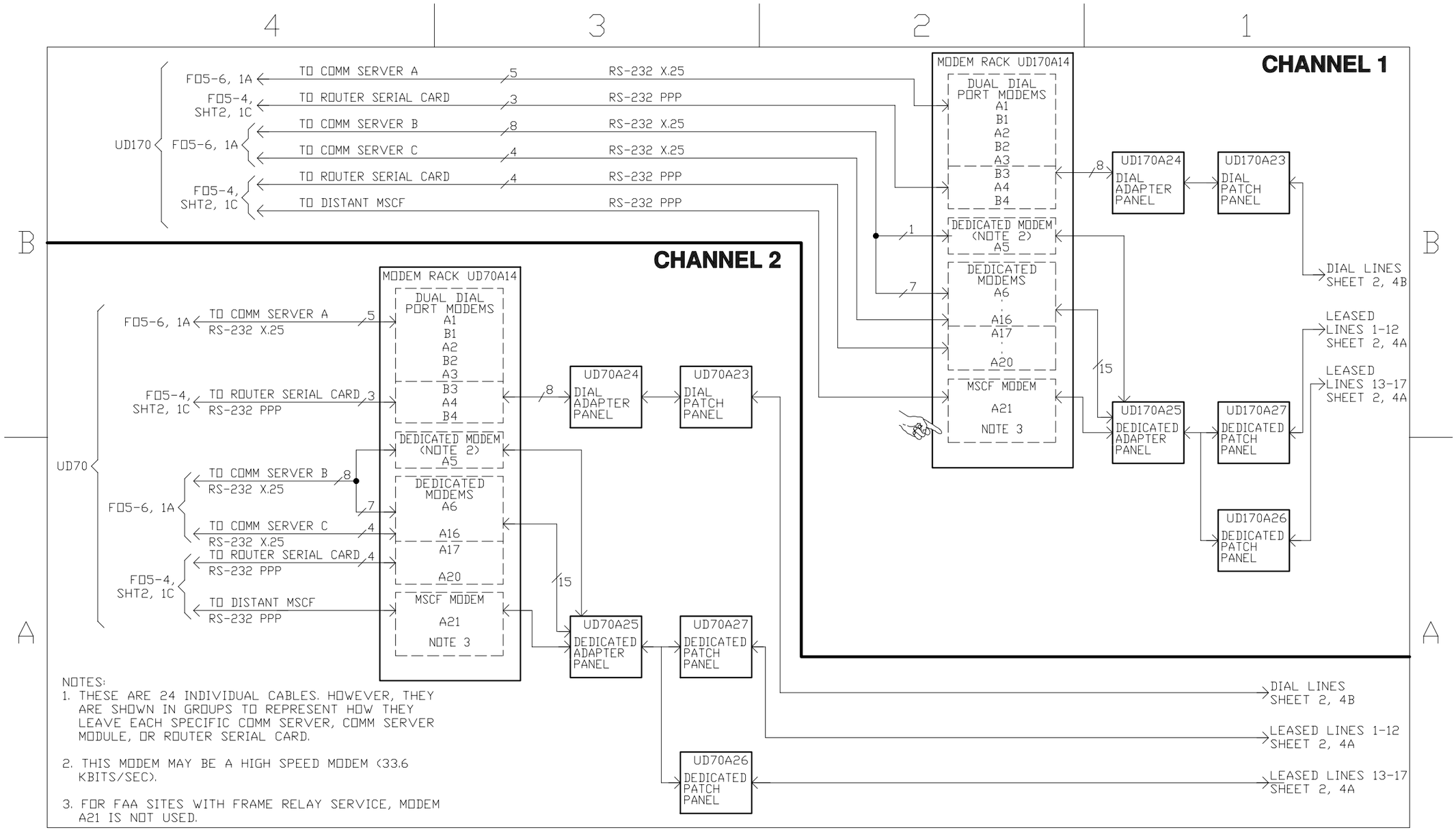

Figure FO5-8. FAA Redundant Narrowband Functional Block Diagram (Sheet 1 of 2)

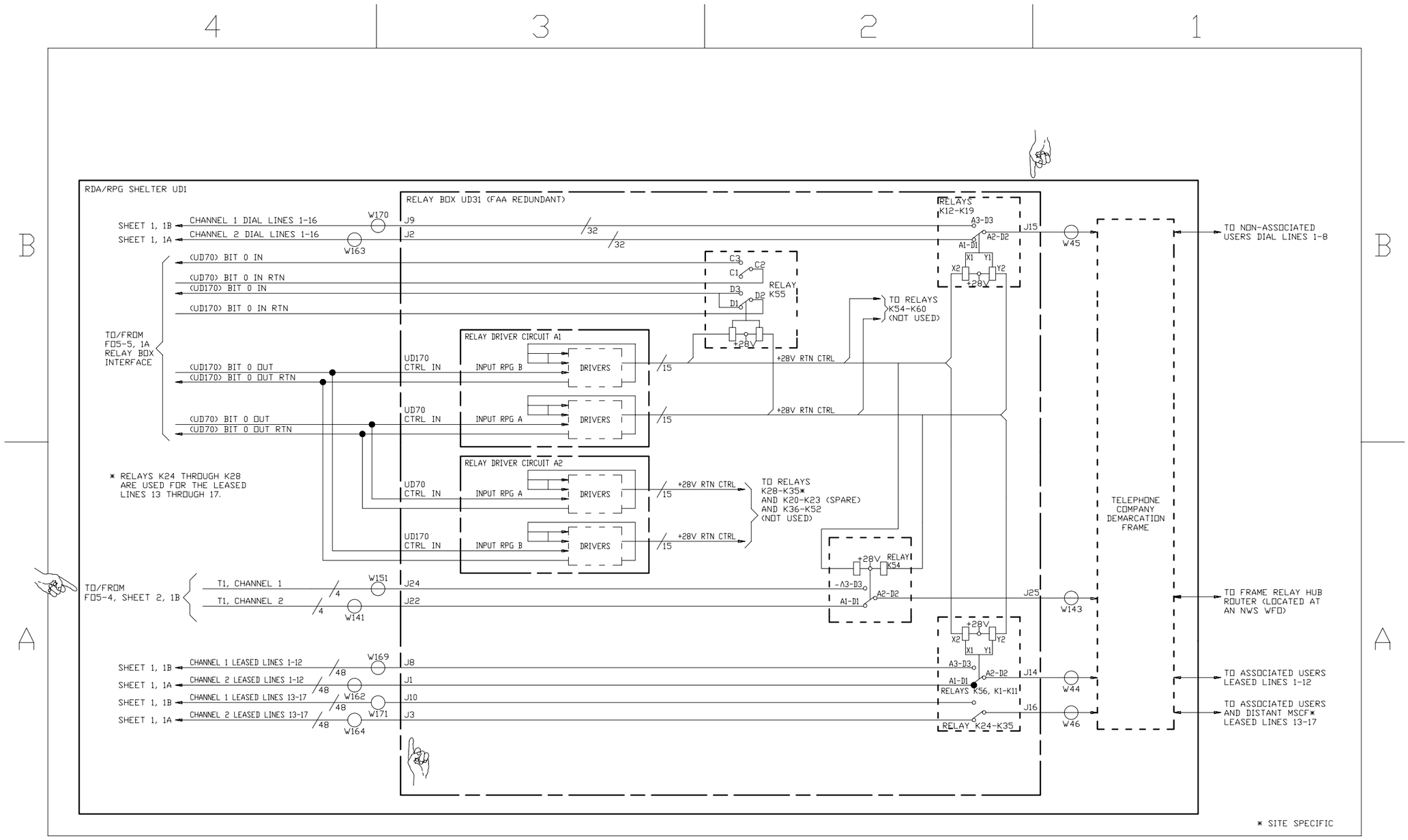

Figure FO5–8 FAA Redundant Narrowband Functional Block Diagram (Sheet 2 of 2)

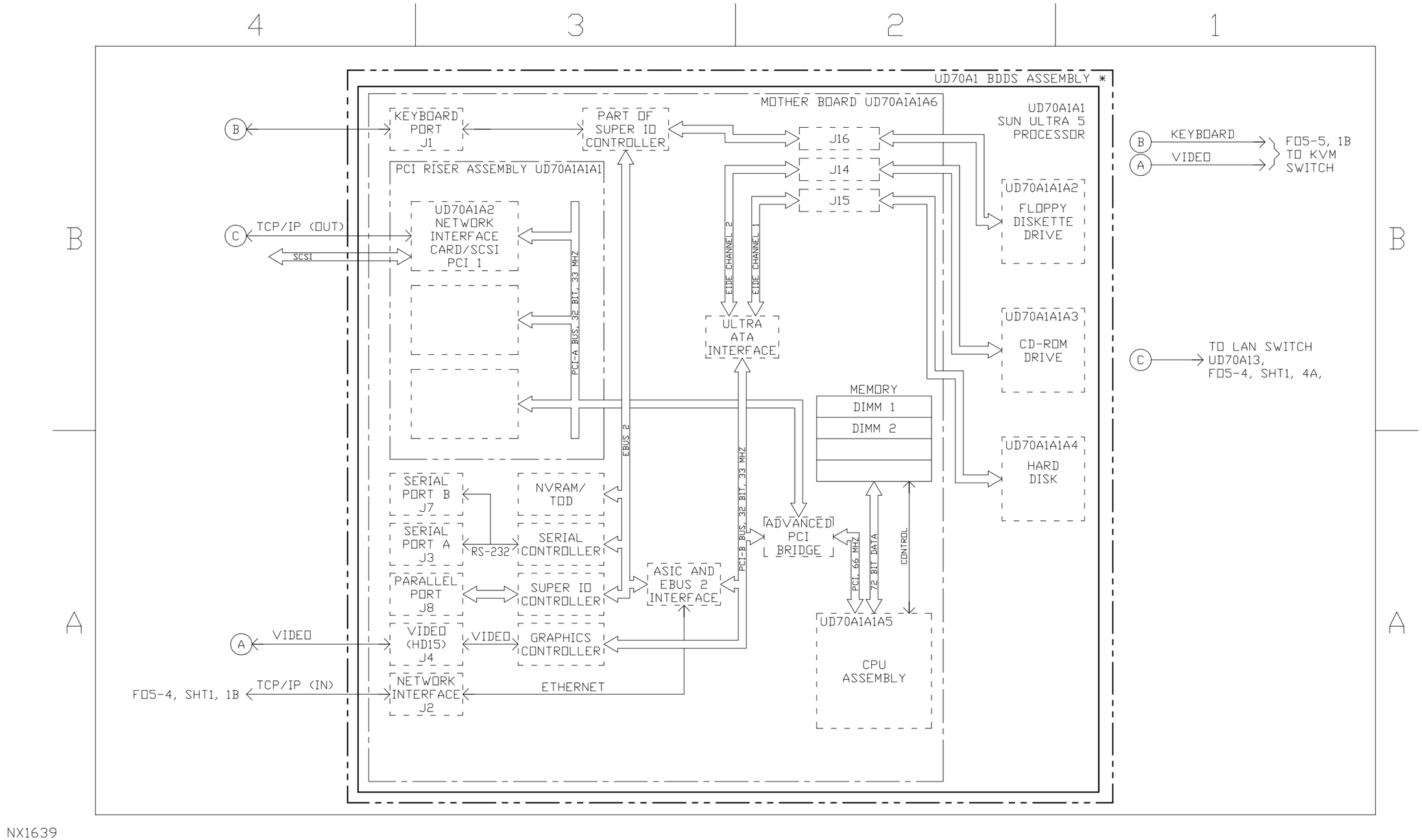

Figure FO5–9. Base Data Distribution Server Functional Block Diagram ▮

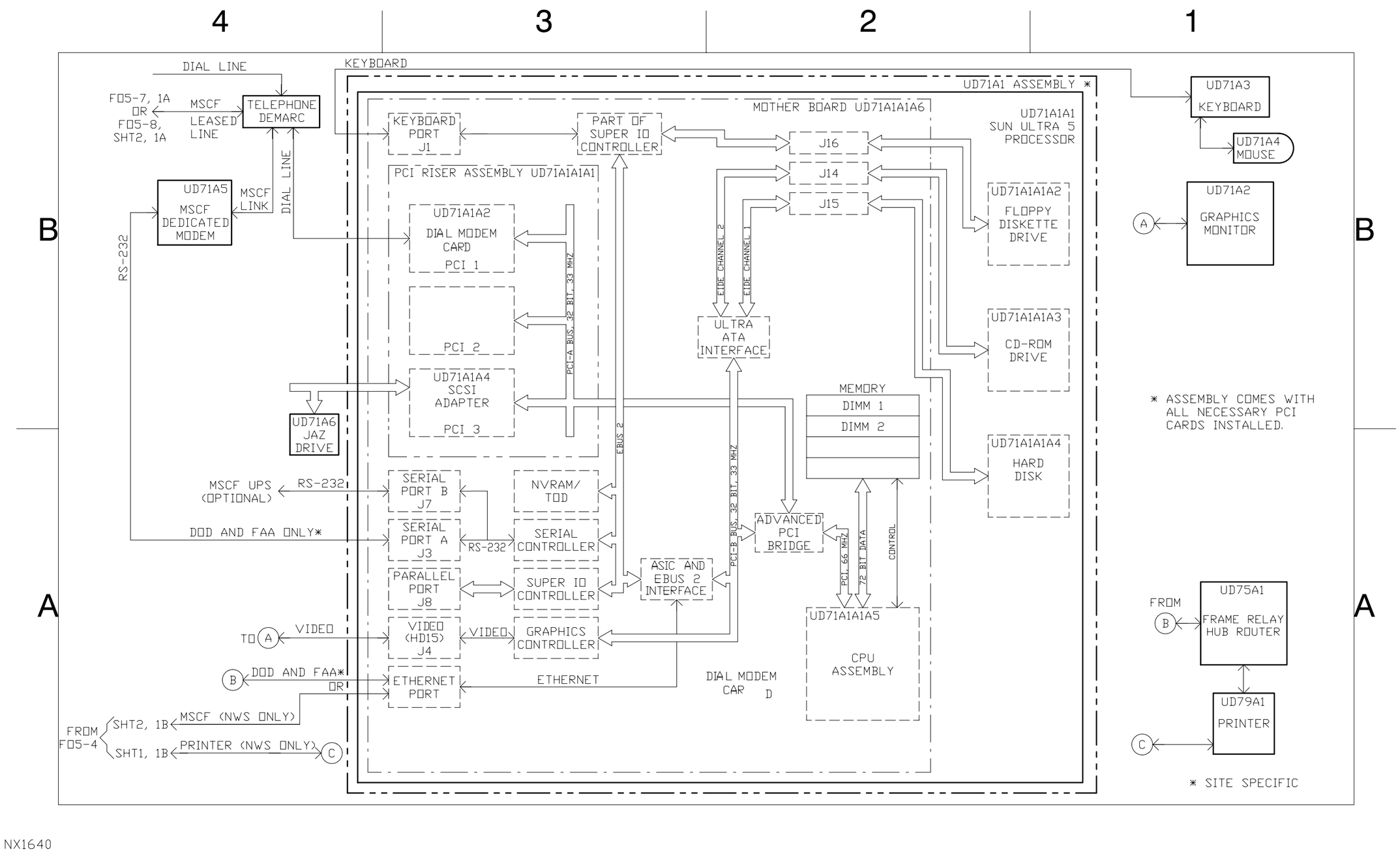

Figure FO5-10. Master System Control Function Functional Block Diagram

CHAPTER 6

MAINTENANCE

Section 6.1. Introduction

NOTE

This chapter and its corresponding sections refer to the RPGPCA as UD70. Unless otherwise specified for FAA redundant systems, this information also applies to RPGPCA UD170.

6.1.1 GENERAL.

This section provides an introduction to the Weather Surveillance Radar WSR–88D on–site maintenance activities, as well as a general description of the WSR–88D site maintenance concept. The chapter is organized to support rapid identification and location of the maintenance data required to implement the field maintenance activities and contains the following sections:

Section 6.1 – Introduction

Section 6.2 – Preventive Maintenance

Section 6.3 – Primary Fault Isolation

Section 6.4 – Secondary Fault Isolation

Section 6.5 – Replacement and Setup Procedure

Section 6.6 – Setup Procedures

6.1.1.1 Maintenance Concept. To reduce system downtime, Built–In–Test, on–line status, performance monitoring, and off–line diagnostic programs are used to the maximum extent possible. Detailed flow diagrams and instructions are used for operational checks, fault isolation, unit replacements, and adjustments.

1. General Maintenance. The general maintenance approach is to centrally monitor system performance at the RDA, RPG, and PUP level to localize the failures through the use of software and hardware maintenance features and to replace the failed site replaceable unit from on–site spares whenever available. The actual repair of a replaced item is performed either in a designated on–site repair area with equipment not part of the operational system, or at a depot.

2. On–Site Maintenance. On–site maintenance will consist primarily of removal and replacement of failed LRUs or Site Replaceable Assemblies (SRAs). An LRU is defined as a self–contained unit/module assembly to which a fault can be isolated so that system fault isolation, removal and replacement can all take place within the LRU maintainability requirements. SRAs contain components such as panel meters, indicators, and switches which may also be isolated and replaced using standard shop practices.

3. On–Equipment Maintenance. On–equipment maintenance at the operational sites will normally be accomplished by maintenance personnel assigned to the location. Organizational maintenance action will consist primarily of removal and replacement of LRUs. However, where simple tests or repairs can be made to LRUs, such as repair or replacement of blowers, circuit breakers, fuses, cables, lamps, switches, etc., organizational maintenance personnel will perform these repairs, using standard shop troubleshooting and repair procedures. Equipment maintenance beyond the LRU is accomplished by personnel from a higher level maintenance facility.

6.1.1.2 On–Line Status and Performance Monitoring. An extensive capability for on–line status and performance monitoring has been incorporated into the system design, using Built–In–Test–Equipment (BITE) to monitor critical system parameters and hardware status. In addition, the operational programs continuously monitor operation by means of self–tests and repetitive evaluation of communication links and data processor operation. The results of this on–line status and performance monitoring activity are presented for readout at both the PUP Workstation color monitors and at each of the alphanumeric terminals (RDA and PUP) or RPG workstations in the form of status, error, or alarm messages. Listings of these messages and instructions for responding to them are contained in Section 6.3.

6.1.1.3 Recovery Procedures. Error messages and alarms are presented to the operator when a fault occurs. When a fault is a temporary condition such as keyboard lockup or communication link disconnect, the operator should analyze the messages, and perform quick–checks and recovery procedures in the Operator's Manual and Chapter 4 of this manual to restore the system to full operation. When a fault is more serious, the message/error condition will serve as the starting point for the fault isolation chart in this Chapter.

6.1.1.4 FAA Redundant System. The FAA redundant system configuration further reduces downtime by allowing one channel to operate normally while troubleshooting, preventive maintenance, and corrective maintenance are performed on the other channel. The system can operate normally while replacements for failed parts are being shipped to the site. Preventive maintenance should be performed on the non–controlling channel whenever possible, thus allowing the system to operate normally.

6.1.2 PREVENTIVE MAINTENANCE PROCEDURES.

WSR–88D System preventive maintenance procedures are provided to support the continuing operational availability of the system by minimizing the effects of ambient environmental conditions and detecting and correcting for the effects of continued operational use wear and tear. Preventive maintenance tasks are scheduled for performance on a periodic basis and consist primarily of routine inspections, cleaning, lubrication, servicing, and operational checks. The WSR–88D automated performance monitoring function minimizes the need for periodic system and parameter checks. Most WSR–88D components require a minimal level of preventive maintenance. The requirements for accomplishing scheduled preventive maintenance tasks on the RPG are contained in the Inspection, Lubrication, and Maintenance Requirements Manual, NWS EHB 6–503 and the Preventive Maintenance Inspection Work Cards, NWS EHB 6–503–2.

6.1.3 PRIMARY FAULT ISOLATION AND OPERATIONAL CHECKS.

Upon detection of an abnormal condition, the maintenance technician should verify the existence of a problem by observing system performance and/or performing an operational check. An operational check procedure flowchart is provided for this purpose in Section 6.3. Once the existence of a problem is confirmed, use the fault isolation flowcharts in Section 6.3. The fault isolation flowcharts use both on–line and off–line diagnostic techniques to isolate the faulty line replaceable unit. On–line diagnostics use the system status changes and specific system alarms. Off–line diagnostic programs are specified from the fault isolation flowcharts as required.

6.1.4 SECONDARY FAULT ISOLATION.

In a few cases, secondary fault isolation is required to isolate the fault to a lower LRU ambiguity group. Section 6.4 provides instructions and flowcharts for secondary fault isolation.

6.1.5 CORRECTIVE MAINTENANCE.

Corrective maintenance procedures consist of LRU or piece part replacement and any associated adjustments and alignments. Section 6.5 contains replacement procedures for items which require instructions beyond standard shop practices. Procedures are provided for setup and strapping as well as follow–up operational checks. Section 6.5 also contains specific instructions for equipment shutdowns and startups to safely perform replacements. These include program termination and restart procedures. If replacement to an asset fails to correct the problems, an interconnection or wiring problems may be indicated. Chapter 7 contains interconnection, cabling, and power distribution diagrams for point–to–point troubleshooting. When a fault occurs in a piece part, standard shop practices for troubleshooting are employed. Detailed functional diagrams in Chapter 5 and cabling diagrams in Chapter 7 may be used to isolate the faulty components.

6.1.6 ALIGNMENTS AND ADJUSTMENTS.

Some site replaceable units require adjustment or alignment following their replacement. Section 6.6 contains an index which identifies these assets. Reference to any related adjustment/alignment procedures is also provided in the specific component replacement instructions in Section 6.5. Section 6.6 contains the alignment/adjustment procedures.

6.1.7 COMPONENT LOCATION AND IDENTIFICATION.

The IPB, NWS EHB 6–501, provides indexed illustrations which may be used for identification and location of all site–replaceable units. The IPB also contains complete parts ordering data, and a reference designation index. Supplemental pictorial data is provided in this chapter or related commercial manuals as required to support specific maintenance procedures.

6.1.8 USE OF COMMERCIAL MANUALS.

Commercial manuals are provided in the WSR–88D technical manual set for selected equipment and peripheral devices. These manuals contain useful reference and descriptive information, but should not be used in place of information contained in this chapter. Only those commercial manual maintenance procedures referenced from within this document should be used for WSR–88D field maintenance.

6.1.9 TOOLS, TEST EQUIPMENT AND CONSUMABLES.

The tools, test equipment, and consumable items required for each maintenance procedure are specified at the beginning of each procedure. A complete listing of all tools, test equipment, and consumables required for all site maintenance activities is contained in the WSR–88D System Manual, NWS EHB 6–500.

6.1.10 SYSTEM STARTUP AND SHUTDOWN PROCEDURES.

Chapter 4 contains the startup and shutdown procedures which should be used for initial turn–on, complete site shutdown, and system startup after a complete shutdown has been performed. The individual sections of this maintenance chapter provide specific instructions for partial or limited shutdown which is required for each preventive or corrective maintenance action.

WARNING

Ensure primary cabinet power at the specified power distribution panel is removed prior to replacing internal components or performing internal or external cleaning activities. Failure to comply with this warning can result in damage to equipment and/or serious injury or death to personnel.

6.1.11 DIAGNOSTIC TEST PROGRAM PROCEDURES.

Chapter 4 contains a description of the diagnostic test programs used in connection with WSR–88D LRU fault isolation. Chapter 4 also contains procedures for loading, initializing and running the various diagnostic routines. These procedures are not intended to be performed on a stand–alone or impromptu basis. Correct results from the use of these programs can only be obtained when the test programs are executed in accordance with the instructions contained in Section 6.3. This is because the flowcharts and associated note sheets establish the correct conditions for invoking the test and interpreting the results in an orderly sequence to ensure meaningful results.

Section 6.2. Preventive Maintenance

NOTE

This chapter and its corresponding sections refer to the RPGPCA as UD70. Unless otherwise specified for FAA redundant systems, this information also applies to RPGPCA UD170.

6.2.1 INTRODUCTION.

The requirements for accomplishing scheduled preventive maintenance tasks on the RPGPCA UD70 and MSCF UD71 Groups are contained in the Inspection, Lubrication, and Maintenance Requirements Manual, NWS EHB 6–503 and the Preventive Maintenance Inspection Work Cards, NWS EHB 6–503–2.

Section 6.3. Primary Fault Isolation

NOTE

This chapter and its corresponding sections refer to the RPGPCA as UD70. Unless otherwise specified for FAA redundant systems, this information also applies to RPGPCA UD170.

6.3.1 INTRODUCTION.

This section contains the instructions and procedures necessary to perform primary fault isolation in the RPG functional area. It includes a set of fault isolation flowcharts with notes to aid the fault isolation process.

6.3.2 FAULT ISOLATION FLOWCHARTS.

The main resource in fault isolation is the flowcharts. They make use of system alarms and status messages to detect faults and use on–line as well as off–line isolation techniques to isolate faults to a single LRU.

6.3.2.1 System Fault Isolation Flowchart. Included with the RPG fault isolation flowcharts is a system fault isolation flowchart (Figure 6–1). The system fault isolation flowchart is designed to ensure that the technician performs fault isolation in the correct functional area. If any question arises as to what functional area is causing the problem, the system flowcharts will lead to the correct area.

6.3.2.2 RPG Fault Isolation Flowcharts. The RPG fault isolation flowcharts (Figure 6–2) are designed to isolate a fault down to a single LRU. The first sheet is a RPG operability test; sheet 2 is a quick reference chart for faults.

6.3.2.3 Operability Test. The RPG operability test is the first sheet of the fault isolation flowchart. It is designed to completely check and exercise the RPG while keeping it on–line. The operability test will often be the entry point for fault isolation. The operability test is indicated as a thick line, called the “no–fault” line. Any time the direction requires abandoning the heavy “no–fault” line as indicated by a narrow line, fault isolation is being undertaken. If the no–fault line is never left and the RPG operability check is completed, the RPG is fully functional and no fault isolation is necessary.

6.3.2.4 Quick Reference Chart. Many times a fault will give such an obvious symptom that the operability check is unnecessary. Sheet 2 of the fault isolation flowchart is a list of the obvious RPG faults and directs the technician to the appropriate area to begin fault isolation. Its purpose is to reduce repair time to a minimum. An area where it is also very useful is when cross–referencing between functional areas takes place. This is particularly evident in the narrowband fault area. Not all problems can be solved using the Quick Reference Chart; if it is of no use for a particular fault, the operability test on sheet 1 should be used.

6.3.2.5 Flowchart Comments. Included throughout the flowcharts are comments. These comments appear in lighter (narrower) type and are included to aid the technician. Due to the complexity and cross–referencing of pages, a technician may not realize or forget what has already been established in previous steps. These comments keep technicians informed of what has been learned and/or what will be tried next to fault isolate.

6.3.2.6 Flowchart Notesheets. Included with the flowcharts are cross–referenced notesheets. The notesheets give instruction for performing diagnostic procedures, or provide definitions. Some of the procedures encountered are included elsewhere in the manual; if this is the case, the notesheets will simply reference the technician to another part of the manual.

6.3.2.7 Secondary Fault Isolation. Occasionally when primary fault isolation is completed, a group of two or more LRUs are encountered. For each one of these groups, a secondary fault isolation procedure has been included in Section 6.4 to complete fault isolation to a single LRU.

6.3.2.8 Flowchart Symbol Convention. All circled letters on the flowcharts indicate a reference to another part of the flowchart. All circled numbers are references to the notesheets which must be run before proceeding to the next step. All boxed characters are references to secondary fault isolation procedures (Section 6.4). Examples are illustrated below:

(A) Reference to another part of flowcharts

(3) Reference to notesheets

[RPG3] Reference to secondary fault isolation procedures.

In addition, the flowcharts are arranged so that all actions that must be performed are in boxes and all questions are in diamonds.

6.3.2.9 Narrowband Configuration. To complete narrowband fault isolation, it is necessary to know what narrowband equipment changed, if any, in the course of site operation. Table 7–2 provides the interconnectivity from the UD70/170A15, A16, and A17 Communication Servers to the UD70/170A14 modem rack and the UD70A20 232/422 converter (NWS line 11 only). Table 7–3 provides interconnectivity between the UD70/170A2A1A2 router serial card and the UD70/170A14 modem rack. These interconnections are through individual serial RS–232 cables. Table 7–4 provides the interconnectivity from the modem racks to the UD70/170A24 Dial Adapter Panel or the UD70/170A25 Dedicated Adapter Panel.

It is necessary that the maintenance technician be aware of which narrowband line is associated to which hardware. In most cases, status messages will identify faults in terms of narrowband line numbers. For both tables listed above, all interface cables should be supplied or installed for all systems; however, not all circuits may actually be active at all sites. Upon installation, annotate which circuits are active. Table 6–1 provides a place to annotate phone numbers for Class 2 dial–in circuits. For dedicated circuits, annotate the actual class of the circuit (Class 1, RPGOP_50, and RPGOP_90) as well as the end user if the circuit is active.

Table 6–1. Active Site Specific Circuits

Dial Communications

Line #	Proto	Class	Users	Carrier	Phone #	Modem
1	X.25	2				A14A1A
2	X.25	2				A14A1B
3	X.25	2				A14A2A
4	X.25	2				A14A2B
5	X.25	2				A14A3A
6	X.25	2				
7	X.25	2				
8	X.25	2				
38	TCP	2				A14A3B
39	TCP	2				A14A4A
40	TCP	2				A14A4B

Dedicated Communications

Line #	Proto	Class	End User	Carrier	Circuit Info	Modem	Modem Rate	Tx Level
9*	X.25	RGOP_50				A14A5*		
10	X.25	1				A14A6		
11	X.25	1				A14A7		
12	X.25	1				A14A8		
13	X.25	1				A14A9		
14	X.25	1				A14A10		
15	X.25	1				A14A11		
16	X.25	1				A14A12		
17	X.25	1				A14A13		
18	X.25	1				A14A14		
19	X.25	1				A14A15		
20	X.25	1				A14A16		
21	X.25	1						
22	X.25	1						
23	X.25	1						
24	X.25	1						

Table 6–1. Active Site Specific Circuits – Continued

Dedicated Communications								
Line #	**Proto**	**Class**	**End User**	**Carrier**	**Circuit Info**	**Modem**	**Modem Rate**	**Tx Level**
25	TCP	RGOP–90						
33	TCP	1				A14A17		
34	TCP	1				A14A18		
35	TCP	1				A14A19		
36	TCP	1				A14A20		
37**	TCP	1				A14A21 **		
41	TCP	2						
42	TCP	2						
MSCF***						A14A21 ***		

* NWS only does not have modem. Instead has converter/modem eliminator.
** NWS only. DoD/FAA systems do not have a modem or serial port for this line.
*** For some DoD and FAA sites. NWS has a local LAN MSCF.

Table 6–2. Active TCP/IP Network Dedicated Connections for Site

Line #	Class	Dedicated End User's IP–Address	Dedicated End User
25	RGOP–90		
26			
27			
28			
29			
30			
31			
32			
33	1		
34	1		
35	1		
36	1		

Table 6–2. Active TCP/IP Network Dedicated Connections for Site – Continued

Line #	Class	Dedicated End User's IP–Address	Dedicated End User
37	1		
41	2		
42	2		

6.3.2.10 Cabling and Connector Problems. It should be noted that in addition to the LRUs listed in the flowcharts, cabling and connector problems associated with the LRUs can cause the trouble symptoms noted. If replacement of the LRU fails to fix the problem, then cabling and connectors associated with the LRU identified to be faulty should be carefully examined. They are not specifically mentioned in the flowcharts as it would make the flowcharts unduly bulky. Necessary wiring data is contained in Chapter 7.

6.3.3 FLOWCHART NOTES.

Table 6–3 lists the flowchart notes referenced in Figure 6–1 and Figure 6–2. The notes are indicated by numerals within circles on the flowcharts.

6.3.4 PRIMARY FAULT ISOLATION FLOWCHARTS.

The fault isolation flowcharts which follow are required for the RPG site. Figure 6–1 is the system fault isolation flowcharts and Figure 6–2 is the RPG fault isolation flowcharts.

Table 6–3. Flowchart Note Index

Flowchart Figure Number	Note Number	Description
Figure 6–1	1	Definition
	2	Archive IV Check
	3	Exercise the Streaming Tape (PUP)
	4	Exercise the One Time Dial Up
	5	Issue a Wideband Disconnect/Connect
	6	Verify RPG HCI Functionality at MSCF Workstation, System Check
	7	Archive III Check From MSCF Workstation
	8	Check Jaz Disk Functionality
	9	Check Floppy Drive Functionality
	10	Check CD–ROM Drive Functionality
	11	Check Date/Time of MSCF, RPG, or BDDS at MSCF Workstation
	12	Exercise the Streaming Tape (RDA)
	13	OS/32 Error Messages
	14	Arithmetic Unit (AU) 1–3 Board Manipulation
	15	Suncheck
	16	Check For Narrowband (NB) Lines Connected at MSCF
Figure 6–2	1	Verify RPG HCI Functionality at MSCF Workstation, RPG Check
	2	Archive III Check From MSCF Workstation
	3	Check Jaz Disk Functionality
	4	Check Floppy Drive Functionality
	5	Check CD–ROM Drive Functionality
	6	Check Date/Time at MSCF, RPG, or BDDS
	7	Verify Processor Graphics Operability
	8	Shutdown Sun Processor with Graphics Problems
	9	Verify Mouse & Keyboard Operability
	10	Start New MSCF Display at MSCF Workstation/Evaluate Comms Status
	11	Kill Current MSCF RPG HCI and Start New One
	12	Establish Telnet Session to RPG and Restart RPG Applications

Table 6–3. Flowchart Note Index – Continued

Flowchart Figure Number	Note Number	Description
Figure 6–2	13	Establish Telnet Session to RPG, Cleanstart RPG Applications
(con't)	14	Establish Telnet Session to RPG and Reboot RPG Processor
	15	Reboot MSCF Processor
	16	Evaluate RPG Router Links Using MSCF Display at MSCF Workstation
	17	Reboot LAN and RPG Router Using Out–of–Bandwidth Power Control
	18	Reboot RPG Router Using Out–of–Bandwidth Power Control
	19	Evaluate RPG Router Links Using MSCF Display at RPG Workstation
	20	Reboot Router with Power Switch and Evaluate Boot/Operation
	21	Establish Dial Session to RDA RRRAT for Remote RPG Reboot (DoD Only)
	22	Stop/Start MSCF PPP, Reset Modem, and Check Link
	23	Reboot MSCF and Monitor for Errors
	24	Reboot Frame Relay Router and Evaluate Boot/Operation Configuration
	25	Verify Frame Relay Service is Up
	26	Verify RPG Functionality
	27	Reboot RPG and Monitor for Errors
	28	Verify BDDS Functionality
	29	Reboot BDDS and Monitor for Errors
	30	Processor Evaluation for Motherboard Problems
	31	Use MSCF Power Control to Reboot RDA/RPG Gateway
	32	Check Processor SCSI Functionality
	33	Perform Printer Self–Test (Test Print)
	34	Check MSCF hme0 Configuration (DoD or FAA MSCF) without Frame Relay
	35	Check MSCF hme0 Configuration (DoD or FAA MSCF) with Frame Relay

Table 6–3. Flowchart Note Index – Continued

Flowchart Figure Number	Note Number	Description
Figure 6–2	36	Reboot and Monitor for hme0 Errors with or without Frame Relay
(con't)	37	Activate SNMP Display for Status Indications
	38	Use Ethernet Cable Checker
	39	Initialize OBDIAGs and Test Floppy Drive
	40	Evaluate System for Product Distribution Problems
	41	Check for Full Narrowband Operability at MSCF
	42	Check for TCP Product User Operability at MSCF
	43	Reboot RPG and All Comm Servers From MSCF
	44	Reboot RPG and RPG Router From MSCF
	45	Reboot Specific Comm Server From MSCF and Test With Ping
	46	Reboot RPG Router From MSCF
	47	Ping TCP Product Distribution Dedicated Users (Line 25 – 37)
	48	Remote Digital Loopback Pattern Test (Dedicated) (Codex 3263)
	49	Modem Self–Test (Dial and Dedicated) (Codex 3261, 3262, and 3263)
	50	Ensure Correct Modem Settings (Dedicated)
	51	Ensure Correct Modem Settings (Dial)
	52	Surge Suppressor Test (Dedicated)
	53	Remote Digital Loopback Pattern Test (Dial) (Codex 3262)
	54	Local Analog Loopback Pattern Test (Codex 3262 and 3263)
	55	Check for Dial Tone and Test Dial Line
	56	Toggle of Codex Modem
	57	Perform Communication Server Loopback Test
	58	Perform Router Serial Port Loopback Test
	59	MSCF Surge Suppressor Test
	60	Redundant Status Menu Check/Channel Switch
	61	Relay Box Power Supply Voltage Measurement
	62	Shutdown RPG Software and Perform DIO Loopback Test on Both Channels

Table 6–3. Flowchart Note Index – Continued

Flowchart Figure Number	Note Number	Description
Figure 6–2	63	RPG Relay Box Connections
(con't)	64	CSU FAR Loopback Test
	65	Check AWIPS Connectivity Associated with DoD and FAA Radars (with Frame Relay)

Notes for Figure 6–1 (System Fault Isolation Flowchart)

NOTE

Command entries and mouse selections are shown in this section in **bold** type. Variable names are normally shown with a unique font (e.g., *variable_name*). Within a specified command string that must be entered, the variable placeholders are not bold type; however, all portions of the command that are entered exactly as shown are in bold type. The variable placeholder within the command string must be replaced with a name, address, etc. unique to each system and the user is told how to formulate the entry, or directed to where to find this information. Since the keyboard in use may have either an "Enter" key or a "Return" key, the end of the command line is delineated with a **<CR>**. Unless stated otherwise, each command line shown must be "entered" to be processed. Also, directory names/paths shown outside of a command example are *italicized* for clarity purposes.

This section will discuss some graphical manipulations using a mouse. The word "click" indicates a standard left mouse click. When a right click or double–click is required, it is specifically indicated. The symbol ▶ is used to indicate subsequent left clicks through sub–menu selections.

NOTE

Procedures requiring Sun operating system level Superuser (root) privileges are marked as follows at the right margin:

SU

(1) DEFINITION

Normal operations is defined as the state of the WSR–88D system when full chain operation has been established (i.e., wideband communications between RPG and RDA established, RDA under RPG control) and one volume scan has been completed, thus making products available at dedicated PUPs.

(2) ARCHIVE IV CHECK

Step	Operator Action	System Response/Comments

NOTE

Ensure disk is NOT write protected.

Notes for Figure 6–1 (System Fault Isolation Flowchart)

Step	Operator Action	System Response/Comments
1	At the optical disk drive:	
	a. Insert test optical disk into the SCSI Optical Disk Unit.	
	b. Turn handle 90 degrees.	Locks in disk.
	c. Press disk load button on lower right side of drive.	Green indicator starts blinking. Wait until indicator lights steadily.

NOTE

All of the entries are made at the PUP applications terminal.

2	Press **<F1>** key and then enter **S,P,19 <CR>**	Displays status of base reflectivity.
3	Make a note of the product parameters for line 1: • Slice • RPG • Time • Date	
4	Enter **S,P,D,1,L <CR>**	Displays product on left color monitor.
5	a. Press **<F1>** key and then enter **A,A,O,R <CR>**	Archives the product.
	b. Fill in the parameters Data Level=**16**, Resolution=**.54**, and the parameters from step 3 then press**<CR>**.	`Archive Unit 1 Write Done` is displayed after archive is completed.
6	a. Press **<F1>** key and then enter **S,P,19 <CR>**	Displays status of base reflectivity.
	b. Press **<F1>** key and then enter **S,P,DEL**,X **<CR>** (X = Line # of *product from step 3*.)	Deletes product from database.
	c. Press **<F1>** key and then enter **A,R,O,R <CR>**	Reads product from optical disk.

Notes for Figure 6–1 (System Fault Isolation Flowchart)

Step	Operator Action	System Response/Comments
6 cont.	d. Fill in the parameters from step 5b and then press **<CR>**.	`Archive Unit 1 Read Done` is displayed after archive read is completed.
7	a. Press **<F1>** key and then enter **S,P,19 <CR>**	Displays status of base reflectivity.
	b. Enter **S,P,D,X,R <CR>** (X = Line # of *product read*.)	Displays product on right color monitor.

NOTE

The product on both screens should be the same.

3 EXERCISE THE STREAMING TAPE (PUP)

Step	Operator Action	System Response/Comments
1	At the PUP M3200 Processor, insert a blank tape into the SCSI drive. Ensure that it is ready to write on and that the black pointer at the top of the tape is not pointing to the safe position.	
2	At the PUP System Console, enter:	
	a. **PUPDOWN <CR>**	
	b. **D TA <CR>**	`TASK(S) NOT FOUND` displayed if all tasks are canceled. If there are tasks in memory, note the task ID and perform step c. If all tasks are canceled proceed to step d.
	c. **CA** *Taskid* **<CR>**	Cancels task.
	d. **LO BACKUP,5ØØ <CR>**	
	e. **ST <CR>**	
	f. **IN=DSCØ:,OUT=STØ:,SEL=CON:, SIZ=3ØØ,LI=CON:,DEL,VER,END<CR>**	

Notes for Figure 6–1 (System Fault Isolation Flowchart)

Step	Operator Action	System Response/Comments
3	At the `BACKUP>` prompt, enter: **PUPDOWN.CSS <CR>** **./ <CR>**	The screen should give a series of messages ending with `End of Task = 0`.
4	If `End of Task = 0` appears, the tape works. At the PUP M3200 Processor, remove the tape from SCSI drive.	A value other than 0 indicates an abnormal termination of task has occurred.
5	At the PUP system console, enter: **PUPUP <CR>**	

(4) EXERCISE THE ONE TIME DIAL UP

Step	Operator Action	System Response/Comments
1	At the PUP graphics tablet:	
	a. Use the mouse to select:	
	Base Reflectivity	
	Default Parameters	
	Lowest Elevation	
	Dial–up Assoc RPG	
	Send RPG Request	
	Clear Screen/Quad.	
	b. Wait about one minute while the program runs.	At PUP monitor, the following messages are displayed: `SEND RPG REQUEST` `REQUEST ACCEPTED`. A line number appears followed by a request for DSCNCT shortly after a timeout error occurs. Verify that the requested product was received.

Notes for Figure 6–1 (System Fault Isolation Flowchart)

(5) ISSUE A WIDEBAND DISCONNECT/CONNECT

Step	Operator Action	System Response/Comments
1	At the MSCF RPG HCI, click on the wideband link lines between the RDA and RPG.	Opens up the `RDA/RPG Interface Control/Status` window. If the link shows a `State:` of `Disconnected HCI` or `Disconnect Pending`, proceed to step 3.
2	In the `RDA/RPG Interface Control/Status` window, click **Disconnect** and then click **Yes** when prompted to continue.	Issues disconnect to wideband link. `State:` should change to `Disconnected HCI` or `Disconnect Pending`. If previous `State:` was `Failure`, the state may change to `Disconnect Pending` and then eventually revert back to a `Failure` state. If this appears to be the case, wait approximately one minute after the original disconnect command is entered before proceeding.
3	In the `RDA/RPG Interface Control/Status` window, click **Connect** and then click **Yes** when prompted to continue.	Issues connect to wideband link. `State:` should change to `Connected`. If State: remains `Connect Pending` or `Failed`, wideband did not connect and this procedure is complete. Close the Wideband Status/Control window.

NOTE

For steps 2 and 3, if no state change was noticed at all, then the HCI is not responding. For step 3, if some state change is noted, or the `Feedback:` message `Connect Wideband Link` is noted on the main HCI screen, then the HCI does appear to be functioning OK even if the wideband does not actually connect (i.e., a wideband problem).

Notes for Figure 6–1 (System Fault Isolation Flowchart)

Step	Operator Action	System Response/Comments
4	If the wideband link connected, click the `RDA` **Control** block.	Opens `RDA/RPG Interface Control/Status` window.
5	Click `RDA State:` **Operate** and then click **Yes** when prompted to continue.	Issues Operate command. `State:` display should change to `Operate`.

6 VERIFY RPG HCI FUNCTIONALITY AT MSCF WORKSTATION, SYSTEM CHECK

NOTE

If the system is in full operation, the following check will temporarily place the RDA in STANDBY and then back into OPERATE. If this check is just being done as part of an operability check only (Figure 6–1, sheet 2 or Figure 6–2, sheet 1) and not to isolate a system fault, then obtain approval from operations personnel prior to performing this check (from Active channel only for FAA Redundant system). This can be performed at any time on the HCI from the FAA Redundant Inactive channel.

Step	Operator Action	System Response/Comments
1	On the RPG HCI on the MSCF Workstation, click on the wideband link (three lines) between the RDA and RPG. For an FAA Redundant system, this check can be done on the HCI for either channel; however, for the purposes of a system check, it should be primarily done on the Active channel.	Opens up the `RDA/RPG Interface Control/Status` window. If the current wideband `State:` is `Disconnected HCI`, proceed to step 3.
2	In the `RDA/RPG Interface Control/Status` window, click **Disconnect** and then click **Yes** when prompted to continue.	Issues disconnect to wideband link. `State:` should change to `Disconnected HCI`. If the present `State:` is `Failure`, the `State:` should show a `Disconnect Pending`, but probably will not actually change to a disconnect state and then revert back to a `Failure` state (wait approximately one minute before proceeding). If state does not change, HCI is not responding. Proceed to step 4.

Notes for Figure 6–1 (System Fault Isolation Flowchart)

Step	Operator Action	System Response/Comments
3	In the `RDA/RPG Interface Control/Status` window, click **Connect** and then click **Yes** when prompted to continue.	Issues connect to wideband link. `State:` should change to its previous state (`Connected`, `Connect Pending` or `Failure`. If previous or present `State:` was `Failure`, no specific state change may be noted if an actual wideband problem exists; however, the `Feedback:` message `Connect Wideband Link` should be noted on the main HCI screen. Close the `RDA/RPG Interface Control/Status` window. If state does not change or feedback message is not noted, HCI is not responding. Proceed to step 4. If HCI appears to be responding OK, this procedure is complete.
4	Double–click the [–] in the upper left corner of the HCI window to kill the HCI. For FAA Redundant systems, kill the HCI for the channel being checked at this time.	The HCI closes. Since this HCI is displayed on this platform through the RSSD, this is all that is required to stop the HCI functionality.
5	If an MSCF display is not available, go to a terminal window and enter: **mscf &<CR>**	If an MSCF Display is already open, continue with the next step. The MSCF window is used to start a new HCI.
6	On the MSCF window, click on **RPG HCI**. For FAA Redundant systems, the appropriate channel must be selected first.	A new HCI appears. For DoD systems and either FAA channel, the display will not be complete for approximately one minute. If no HCI appears, the HCI is non–functional and this procedure is complete. If an HCI appears, continue on to the next step to evaluate if it useable.
7	On the RPG HCI, click on the WB link between the RDA and RPG.	Opens up the `RDA/RPG Interface Control/Status` window. If the current wideband `State:`is `Disconnected HCI`, proceed to step 9.

Notes for Figure 6–1 (System Fault Isolation Flowchart)

Step	Operator Action	System Response/Comments
8	In the `RDA/RPG Interface Control/Status` window, click **Disconnect** and then click **Yes** when prompted to continue.	Issues disconnect to wideband link. `State:` should change to `Disconnected HCI`. If the present `State:` is `Failure`, the `State:` should show a `Disconnect Pending`, but probably will not actually change to a disconnect state and then revert back to a `Failure` state (wait approximately one minute before proceeding). If state does not change, HCI is not responding.
9	In the `RDA/RPG Interface Control/Status` window, click **Connect** and then click **Yes** when prompted to continue.	Issues connect to wideband link. `State:` should change to its previous state (`Connected`, `Connect Pending` or `Failure`). If previous or present `State:` was `Failure`, no specific state change may be noted if an actual wideband problem exists; however, the `Feedback:` message `Connect Wideband Link` should be noted on the main HCI screen. Close the `RDA/RPG Interface Control/Status` window. If state does not change or feedback message is not noted, HCI is not responding.

7 ARCHIVE III CHECK FROM MSCF WORKSTATION

Step	Operator Action	System Response/Comments
1	On the RPG HCI at the MSCF Workstation, verify if the Archive III indicator under the `Archive Products` block indicates `Active`.	If Archive III is *Active*, Archive III appears to be functional. Proceed to step 4 to validate that products are being archived. If it indicates *Idle*, proceed with the next step. If it indicates *Not Mounted*, then Archive III in not functioning and this procedure is complete.

Notes for Figure 6–1 (System Fault Isolation Flowchart)

Step	Operator Action	System Response/Comments
2	At the RPG HCI, click the **Archive Products** block under the RPG container.	Opens the `Archive III Control/Status` window.
3	In the `Archive III Control/Status` window, click `Products` **Record** in the `Auto Archive Control/Status` area. Click **Yes** when prompted.	Turns on auto archive of products. The `Status` indicator should change to *Active*.
4	If the RDA is not already in Operate, click `RDA` **Control** and then click **Operate** under `RDA State`. Note time of Volume Start to the left of the radome or, if already in RDA Operate, note the time of the next volume start.	The volume start time is necessary to determine if the lowest elevation reflectivity product is being archived successfully.
5	Wait until the VCP has completed its 5 degree elevation cuts, then click `Read From Archive:` **Product** at the top of the `Archive III Control/Status` window.	Opens the `Read Product from Archive III` window.
6	In the `Product Retrieval Criteria` area, click the down arrow in the `Date:` block. Scroll down as necessary and select today's date. In both of the `Time:` blocks, click the down arrow, scroll down, and select the newest product time. In the `Product:` field, note if the default product (R[19], Reflectivity, .5 degrees) is indicated to be available to read for the volume time noted in step 4.	If the product is available for read, then the Archive III is functioning correctly.

Notes for Figure 6–1 (System Fault Isolation Flowchart)

(8) CHECK JAZ DISK FUNCTIONALITY

SU

Step	Operator Action	System Response/Comments
1	For the RPG processor only, stop the applications software per Table 4–41.	This is necessary to be able to unmount and retrieve the Archive III Jaz disk prior to performing this check.

NOTE

Completion of this procedure requires Superuser (root) privileges.

2	At the MSCF workstation (for MSCF processor) or the RPG maintenance position workstation (for RPG processor), go to a normal terminal window system prompt and enter: **su<CR>** and the *root_password<CR>* to become a root user.	
3	If at an RPG processor, then at the # prompt, enter: **umount /jaz<CR>** then press the button on the Jaz drive and remove the Archive III Jaz disk from the drive (NWS only).	This unmounts the Archive III Jaz disk prior to performing the backup. If not at an RPG processor, continue with the next step. If a `umount: /jaz not mounted` message occurs, it just indicates that the Jaz disk cartridge is already unmounted.
4	Insert a Jaz disk cartridge designated for backup purposes into the Jaz disk drive.	Ensure this is a backup disk cartridge and not an Archive III cartridge.

Notes for Figure 6–1 (System Fault Isolation Flowchart)

Step	Operator Action	System Response/Comments
5	If at an RPG workstation, then in the terminal window at the # prompt, enter: **ls –l /jaz<CR>** If at an MSCF workstation, then in the terminal window at the # prompt, enter: **mount /dev/dsk/c1t3dØs2 /jaz<CR>**	Mounts the Jaz disk cartridge in the Jaz disk drive to the /jaz mount point and displays a current directory listing for the disk cartridge. For the RPG, this is done by an auto–mounting program as soon as any attempt is made to access the /jaz directory. If an error occurs (either `mount error` or `permission denied` error), the Jaz Disk drive is not functioning correctly and this procedure is complete.
6	In the terminal window at the # prompt, enter: **mount<CR>**	Verify that the last line shows /jaz is mounted. If it is not mounted, the Jaz Disk drive is not functioning correctly and this procedure is complete.
7	In the terminal window at the # prompt, enter: **cp /etc/hosts /jaz<CR>**	Makes a backup copy of the hosts file on the Jaz disk cartridge. A # prompt will return if the copy was successful and no write errors should be noted. If the system does not return to a # prompt or write errors are noted, the Jaz disk drive is defective.
8	In the terminal window at the # prompt, enter: **ls –lrt /jaz<CR>**	Displays a directory listing of the /jaz directory with the most recent files listed at the bottom. The "hosts" file should be the last entry.
9	In the terminal window at the # prompt, enter: **umount /jaz<CR>**	Unmounts the Jaz disk cartridge. This procedure is complete.
10	Press the button on the Jaz drive to eject the backup disk cartridge.	If this is an RPG, reinstall the original Archive III disk cartridge.
11	At the # prompt, enter: **exit<CR>**	Exits Superuser mode.
12	If at an RPG processor reinsert the Archive III disk (NWS only) and then restart applications software per Table 4–42.	If at an RPG, applications software was stopped prior to performing this procedure.

Notes for Figure 6–1 (System Fault Isolation Flowchart)

9 CHECK FLOPPY DRIVE FUNCTIONALITY

Step	Operator Action	System Response/Comments
1	Insert a known good DOS or UNIX formatted floppy into the floppy drive.	Either type formatted floppy will work in the drive.
2	At a normal user prompt enter: **volcheck<CR>**	"volcheck" mounts the floppy disk in the drive.
3	At the normal user prompt, enter **mount<CR>**	Displays all mounted devices and disk partitions. The last mount entry should indicate `/floppy/unnamed_floppy` (or possible floppy volume name) is the mount point for `/vol/dev/diskette0/...` (the actual floppy. If a "floppy" entry is not observed, the floppy disk did not mount and the drive is defective.
4	At the normal user prompt, enter **cp /etc/hosts /floppy/floppyØ<CR>**	"/floppy/floppyØ" is just a consistent linked mount point, whether the floppy is "unnamed" or actually has a volume name.
5	At the normal user prompt, enter: **ls –lrt /floppy/floppyØ/*<CR>**	Displays a directory listing of the /floppy/floppyØ disk. The "*" is necessary in this case to get past the link. The "hosts" file should be the last entry in the main floppy disk directory list (sub–directory lists may be present also).
6	At the normal user prompt, enter: **eject<CR>**and click **OK** when prompted that the floppy disk can be manually ejected.	Unmounts the floppy disk. This procedure is complete.

Notes for Figure 6–1 (System Fault Isolation Flowchart)

(10) CHECK CD–ROM DRIVE FUNCTIONALITY

Step	Operator Action	System Response/Comments
1	Insert the Full System Load CD into the CD–ROM drive and close the cradle.	Any known good CD should work (e.g., the Technical Manual Distribution CD). The CD should auto–mount and a File Manager window should appear.
2	Click on any file within the File Manager window to select it (not a folder).	This file will be used to test a copy of the file from the CD.
3	At the top of the File Manager window, click **Selected ▶ Copy to ...**.	Will allow for the selected file to be copied off of the CD.
4	Use the mouse to highlight the entire path in the `Destination Folder:` box. Then enter: **~<CR>**	The home directory (~) is selected as the destination point. As soon as <CR> is entered, the file is copied.
5	Go to a normal terminal window with a normal user prompt (not a root # prompt) and enter: **cd /export/home/***user_login_name***<CR>**	Changes to user's home directory.
6	At user's home directory prompt, enter: **ls –lrt<CR>**	Displays a file listing with the latest file at the end of the listing. The copied file should be at the bottom of the list. Use the rm command to remove that specific file if desired.
7	On the File Manager window, click **File ▶ Eject** and retrieve the test CD from the CD–ROM drive.	This ejects the CD and closes the File Manager window.

Notes for Figure 6–1 (System Fault Isolation Flowchart)

(11) CHECK DATE/TIME OF MSCF, RPG, OR BDDS AT MSCF WORKSTATION

Step	Operator Action	System Response/Comments
1	At any MSCF Workstation terminal window prompt, enter: **date<CR>**	This displays the system date and time (GMT time, 24 hour clock). To remotely check the date/time of the RPG and/or BDDS processors from the MSCF, continue with step 2. Otherwise, this procedure is complete.
2	To remotely check the date/time of the RPG, at an MSCF terminal window prompt, enter: **telnet rpg1<CR>** (or rpg2 for FAA Redundant only)	"telnet" will establish a remote connection to that processor. To only check the BDDS processor time, skip to step 5. Otherwise, continue with the next step.
3	At the `Login:` prompt, enter normal user account name and enter password when prompted.	All maintenance personnel should have user accounts on all processors.
4	Enter: **date<CR>**	This displays the system date and time (GMT time, 24 hour clock). To remotely check the date/time of the BDDS processor from the RPG, then continue with step 5. Otherwise, this procedure is complete. (Note: NWS and DoD sites will have BDDS units.)
5	To remotely check the date/time of the BDDS, at an MSCF terminal window prompt or an RPG terminal window prompt, enter: **telnet bdds<CR>**	"telnet" will establish a remote connection to that processor.
6	At the `Login:` prompt, enter a normal user account name and enter password when prompted.	All maintenance personnel should have user accounts on all processors.

Notes for Figure 6–1 (System Fault Isolation Flowchart)

Step	Operator Action	System Response/Comments
7	Enter: **date<CR>**	This displays the system date and time (GMT time, 24 hour clock). This procedure is complete.
8	Enter: **exit<CR>**as many times as necessary to exit telnet session(s) and return to an MSCF prompt	This displays the system date and time (GMT time, 24 hour clock). This procedure is complete.

12 EXERCISE THE STREAMING TAPE (RDA)

Step	Operator Action	System Response/Comments
1	At the RDA M3200 Processor, insert a blank tape into the SCSI drive. Ensure that it is ready to write on and that the black pointer at the top of the tape is not pointing to the safe position.	
2	At the RDA System Console, enter: **LO BACKUP,5ØØ <CR>** **ST,IN=DSCØ:,OUT=STØ:,LI=CON:,** **SIZ=3ØØ,SEL=CON:,DEL,VER,END <CR>**	
3	At the `BACKUP>` prompt, enter: **RDAUP.CSS <CR>** **./ <CR>**	The screen should give a series of messages ending with `End of Task = 0`
4	If `End of Task = 0` appears, the tape works. At the RDA M3200 Processor, remove the tape from SCSI drive.	If an `End of Task = 0` messages is not received, the tape "exercise" did not complete successfully.

13 OS/32 ERROR MESSAGES

The following is a list of operating system alarms which may appear on the system console. For explanations of individual alarms, refer to Tables 4–30 and 4–31 of NWS EHB 6–510.

1. I/O error on voln; Mark off and check bit map error on voln; mark off and check
2. PIC (Precision Interval Clock) not active at address XX
3. Access level address error at XXXXXX (YYYYYY), memory fault address = XXXXXX (YYYYYY)
4. Address fault is SVC at XXXXXX (YYYYYY)

Notes for Figure 6–1 (System Fault Isolation Flowchart)

5. Alignment fault instruction at XXXXXX (YYYYYY), memory fault address = XXXXXX (YYYYYY)
6. Floating point functional range error at XXXXXX
7. Decimal overflow error at XXXXXX (YYYYYY), next instruction at XXXXXX (YYYYYY)
8. Executive privilege error at XXXXXX (YYYYYY), memory fault address = XXXXXX (YYYYYY)
9. Fixed point–zero divide error at XXXXXX (YYYYYY), next instruction at XXXXXX (YYYYYY)
10. Fixed point–zero overflow error at XXXXXX (YYYYYY), next instruction at XXXXXX (YYYYYY)
11. Illegal instruction at XXXXXX (YYYYYY)
12. Illegal SVC–instruction at XXXXXX (YYYYYY), SVC parameter block at XXXXXX (YYYYYY)
13. Floating point underflow error at XXXXXX (YYYYYY)
14. Invalid segment address error at XXXXXX (YYYYYY), memory fault address = XXXXXX (YYYYYY)
15. I/O–ERR Type = XXXX; Segname = YYYY; Segtype = 2222
16. Floating point overflow error at XXXXXX (YYYYYY)
17. Memory error on data fetch at XXXXXX (YYYYYY), memory fault address = XXXXXX (YYYYYY)
18. Memory error on instruction fetch at XXXXXX (YYYYYY), memory fault address = XXXXXX (YYYYYY)
19. Floating point zero divide error at XXXXXX (YYYYYY)
20. Non–existent segment error (Process Segment Table {PST}) at XXXXXX (YYYYYY), memory fault address = XXXXXX (YYYYYY)
21. Non–existent segment error (SST) at XXXXXX (YYYYYY), memory fault address = XXXXXX (YYYYYY)
22. Packed format–sign error at XXXXXX (YYYYYY), memory fault address = XXXXXX (YYYYYY)
23. Packed format–data error at XXXXXX (YYYYYY), memory fault address = XXXXXX (YYYYYY)
24. Read privilege address error at XXXXXX (YYYYYY), memory fault address = XXXXXX (YYYYYY)

Notes for Figure 6–1 (System Fault Isolation Flowchart)

25. Segment limit address error at RRXXXX (YYYYYY), memory fault address = XXXXXX (YYYYYY)

26. SVC address error–instruction at XXXXX (YYYYYY)

27. SVC parameter block at XXXXXX (YYYYYY)

28. Task paused

29. Undefined data format fault at XXXXX (YYYYYY), memory fault address = XXXXXX (YYYYYY)

30. Write privilege address error at XXXXXX (YYYYYY), memory fault address = XXXXXX (YYYYYY)

(14) Arithmetic Unit (AU) 1–3 BOARD MANIPULATION

The problem experienced here is associated with one of the three AUs in the Programmable Signal Processor (PSP). The AU1 controls displays closest to the center of the PUP display; the AU2 controls the midband ranges; and the AU3 controls the outerband ranges.

The AUs are made up of the following cards:

Arith Unit	Memory	Input Multiplexor (MUX)	Mult Accum	Output Select
AU1	5A9A8	5A9A9	5A9A10	5A9A11
AU2	5A9A12	5A9A13	5A9A14	5A9A15
AU3	5A9A16	5A9A17	5A9A18	5A9A19

Interchange the four cards in the AU experiencing the annular ring problem with one of the other AUs not experiencing the problem. Bring the system up and wait for new products to be received. If the problem has migrated to another band, the AU in the band with the annular rings has a bad card. Switch the AUs back to original configuration and replace the bad AU.

Step	Operator Action
1	At the command line on the Main Menu of the Applications Terminal, type **TERP** and then **<Tab>** to parameters line and type in *password* **<CR>**.
2	Turn CRT breaker to HSP/PSP off.
3	Using Electrostatic Discharge (ESD) precautions remove AU1, AU2, and AU3 from PSP. Be sure to note slot #'s and S/N's before and after next step.
4	Put AU1 in AU3 slot Put AU2 in AU1 slot Put AU3 in AU2 slot

Notes for Figure 6–1 (System Fault Isolation Flowchart)

Step	Operator Action
5	Turn circuit breaker for Hardwired Signal Processor/Programmable Signal Processor (HSP/PSP) on.
6	Simultaneously press **<Shift>** and **<Port>** keys to get System Console screen and enter: **RDAUP<CR>**

(15) SUNCHECK

Step	Operator Action	System Response/Comments
1	Ensure RDA is down by entering **TERP <TAB> FLOYD <CR>**	
2	Enter **RDASOT <CR>**	The Radar Data Acquisition System Operational Test (RDASOT) software program loads and starts.
3	Enter **3 <CR>**	Calibration menu displayed.
4	Enter **2 <CR>**	SUNCHECK Test Control Menu displayed.
5	Enter **1 <CR>**	To begin pedestal alignment.
6	Enter current GMT in the format displayed on the screen.	
7	Enter **Y <CR>**	To save the azimuth correction factor.
8	Enter **Y <CR>**	To save elevation correction factor.
9	Enter **TERM <CR>**	SUNCHECK Test Control Menu displayed.
10	Type **Ø <CR>**	
11	Type **Ø <CR>**	
12	Type **Ø <CR>**	RDASOT program terminates.

Notes for Figure 6–1 (System Fault Isolation Flowchart)

(16) CHECK FOR NB LINES CONNECTED AT MSCF

Step	Operator Action	System Response/Comments
1	At the MSCF RPG HCI, click on the light green link between the `RPG` and `USERS` blocks.	This will bring up the `Product Distribution Comms Status` window.
2	Click **Status** in the `Sorted By:` area below the `Product Distribution Lines` window.	Connected lines will move to the top of the display.

NOTES

Command entries and mouse selections are shown in this section in **bold** type. Variable names are normally shown with a unique font (e.g., *variable_name*). Within a specified command string that must be entered, the variable placeholders are not bold type; however, all portions of the command that are entered exactly as shown are in bold type. The variable placeholder within the command string must be replaced with a name, address, etc. unique to each system and the user is told how to formulate the entry, or directed to where to find this information. Since the keyboard in use may have either an "Enter" key or a "Return" key, the end of the command line is delineated with a **<CR>**. Unless stated otherwise, each command line shown must be "entered" to be processed. Also, directory names/paths shown outside of a command example are *italicized* for clarity purposes.

This section will discuss some graphical manipulations using a mouse. The word "click" indicates a standard left mouse click. When a right click or double–click is required, it is specifically indicated. The symbol ▶ is used to indicate subsequent left clicks through sub–menu selections.

Procedures requiring Sun operating system level Superuser (root) privileges are marked as follows at the right margin:

SU

Notes for Figure 6–2 (RPG Fault Isolation Flowchart)

1 VERIFY RPG HCI FUNCTIONALITY AT MSCF WORKSTATION, RPG CHECK

NOTE

If the system is in full operation, the following check will temporarily place the RDA in STANDBY and then back into OPERATE. If this check is just being done as part of an operability check only (Figure 6–1, sheet 2 or Figure 6–2, sheet 1) and not to isolate a system fault, then obtain approval from operations personnel prior to performing this check (from Active channel only for FAA Redundant system). This can be performed at any time on the HCI from the FAA Redundant Inactive channel.

Step	Operator Action	System Response/Comments
1	On the RPG HCI at the MSCF Workstation, click on the wideband link (three lines) between the RDA and RPG. For an FAA Redundant system, this check can be done on the HCI for either channel; however, for the purposes of a system check, it should be primarily done on the Active channel.	Opens up the `RDA/RPG Interface Control/Status` window. If the current wideband `State:` is `Disconnected HCI`, proceed to step 3.
2	In the `RDA/RPG Interface Control/Status` window, click **Disconnect** and then click **Yes** when prompted to continue.	Issues disconnect to wideband link. `State:` should change to `Disconnected HCI`. If the present `State:` is `Failure`, the `State:` should show a `Disconnect Pending`, but probably will not actually change to a disconnect state and then revert back to a `Failure` state (wait approximately one minute before proceeding). If state does not change, HCI is not responding. Proceed to step 4.

Notes for Figure 6–2 (RPG Fault Isolation Flowchart)

Step	Operator Action	System Response/Comments
3	In the `RDA/RPG Interface Control/Status` window, click **Connect** and then click **Yes** when prompted to continue.	Issues connect to wideband link. `State:` should change to its previous state (`Connected`, `Connect Pending` or `Failure`). If previous or present `State:` was `Failure`, no specific state change may be noted if an actual wideband problem exists; however, the `Feedback:` message `Connect Wideband Link` should be noted on the main HCI screen. Close the `RDA/RPG Interface Control/Status` window. If state does not change or feedback message is not noted, HCI is not responding. Proceed to step 4. If HCI appears to be responding OK, this procedure is complete.
4	Double–click the [–] in the upper left corner of the HCI window to kill the HCI. For FAA Redundant systems, kill the HCI for the channel being checked at this time.	The HCI closes. Since this HCI is displayed on this platform through the RSSD, this is all that is required to stop the HCI functionality.
5	If an MSCF display is not available, go to a terminal window and enter: **mscf &<CR>**	If an MSCF Display is already open, continue with the next step. The MSCF window is used to start a new HCI.
6	On the MSCF window, click on **RPG HCI**. For FAA Redundant systems, the appropriate channel must be selected first.	A new HCI appears. For DoD systems and either FAA channel, the display will not be complete for approximately one minute. If no HCI appears, the HCI is non–functional and this procedure is complete. If an HCI appears, continue on to the next step to evaluate if it useable.

Notes for Figure 6–2 (RPG Fault Isolation Flowchart)

Step	Operator Action	System Response/Comments
7	On the RPG HCI, click on the WB link between the RDA and RPG.	Opens up the `RDA/RPG Interface Control/Status` window. If the current wideband `State:` is `Disconnected HCI`, proceed to step 9.
8	In the `RDA/RPG Interface Control/Status` window, click **Disconnect** and then click **Yes** when prompted to continue.	Issues disconnect to wideband link. `State:` should change to `Disconnected HCI`. If the present `State:` is `Failure`, the `State:` should show a `Disconnect Pending`, but probably will not actually change to a disconnect state and then revert back to a `Failure` state (wait approximately one minute before proceeding). If state does not change, HCI is not responding.
9	In the `RDA/RPG Interface Control/Status` window, click **Connect** and then click **Yes** when prompted to continue.	Issues connect to wideband link. `State:` should change to its previous state (`Connected`, `Connect Pending` or `Failure`). If previous or present `State:` was `Failure`, no specific state change may be noted if an actual wideband problem exists; however, the `Feedback:` message `Connect Wideband Link` should be noted on the main HCI screen. Close the `RDA/RPG Interface Control/Status` window. If state does not change or feedback message is not noted, HCI is not responding.

Notes for Figure 6–2 (RPG Fault Isolation Flowchart)

(2) ARCHIVE III CHECK FROM MSCF WORKSTATION

Step	Operator Action	System Response/Comments
1	On the RPG HCI at the MSCF Workstation, verify if the Archive III indicator under the `Archive Products` block indicates `Active`.	If Archive III is *Active*, Archive III appears to be functional. Proceed to step 4 to validate that products are being archived. If it indicates *Idle*, proceed with the next step. If it indicates *Not Mounted*, then Archive III in not functioning and this procedure is complete.
2	At the RPG HCI, click the **Archive Products** block under the RPG container.	Opens the `Archive III Control/Status` window.
3	In the `Archive III Control/Status` window, click `Products` **Record** in the `Auto Archive Control/Status` area. Click **Yes** when prompted.	Turns on auto archive of products. The `Status` indicator should change to *Active*.
4	If the RDA is not already in Operate, click `RDA` **Control** and then click **Operate** under `RDA State`. Note time of Volume Start to the left of the radome or, if already in RDA Operate, note the time of the next volume start.	The volume start time is necessary to determine if the lowest elevation reflectivity product is being archived successfully.
5	Wait until the VCP has completed its 5 degree elevation cuts, then click `Read From Archive:` **Product** at the top of the `Archive III Control/Status` window.	Opens the `Read Product from Archive III` window.
6	In the `Product Retrieval Criteria` area, click the down arrow in the `Date:` block. Scroll down as necessary and select today's date. In both of the `Time:` blocks, click the down arrow, scroll down, and select the newest product time. In the `Product:` field, note if the default product (R[19], Reflectivity, .5 degrees) is indicated to be available to read for the volume time noted in step 4.	If the product is available for read, then the Archive III is functioning correctly.

Notes for Figure 6–2 (RPG Fault Isolation Flowchart)

(3) CHECK JAZ DISK FUNCTIONALITY

SU

Step	Operator Action	System Response/Comments
1	If the Jaz drive is at an MSCF processor, proceed to step 3. For the Jaz drive at an RPG processor, start an RPG HCI on the RPG workstation if necessary by logging into the CDE as a normal user and then entering **hci &<CR>** in a terminal window.	For the RPG only, the Archive III Jaz disk cartridge can be ejected using the HCI.

NOTE

Completion of this procedure requires Superuser (root) privileges. If used, this procedure will impact normal Archive III data collection. Do not proceed if crucial Archive III data is being collected.

2	If Archive III status on RPG HCI is `Not Mounted`, proceed to step 3. On the RPG HCI, click **Archive Products** below the `RPG` container. In the `Archive III Control/Status` window, click `Products` **Stop** and `Status` **Stop** in the `Auto Archive Control/Status` area. Click **Yes** as necessary when prompted. Then click **Eject Disk** at the top of the window.	Auto Archive must be either paused or stopped to eject the disk.
3	At the MSCF workstation (for MSCF Jaz) or the RPG workstation (for RPG Jaz), go to a normal terminal window system prompt and enter: **su<CR>** and the *root_password<CR>* to become a root user.	If testing an MSCF Jaz, proceed to step 5.
4	If at an RPG processor, remove the Archive III Jaz disk from the drive (NWS only) that was ejected in step 2.	Set the Archive III disk to the side for use when this procedure is complete
5	Insert a Jaz disk cartridge designated for backup purposes into the Jaz disk drive.	Ensure this is a backup disk cartridge and not an Archive III cartridge.

Notes for Figure 6–2 (RPG Fault Isolation Flowchart)

Step	Operator Action	System Response/Comments
6	If at an RPG workstation, then in the terminal window at the # prompt, enter: **ls –l /jaz<CR>** If at an MSCF workstation, then in the terminal window at the # prompt, enter: **mount /dev/dsk/c1t3dØs2 /jaz<CR>**	Mounts the Jaz disk cartridge in the Jaz disk drive to the /jaz mount point and displays a current directory listing for the disk cartridge. For the RPG, this is done by an auto–mounting program as soon as any attempt is made to access the /jaz directory. If an error occurs (either `mount error` or `permission denied` error), the Jaz Disk drive is not functioning correctly and this procedure is complete.
7	In the terminal window at the # prompt, enter: **mount<CR>**	Verify that the last line shows /jaz is mounted. If it is not mounted, the Jaz Disk drive is not functioning correctly and this procedure is complete.
8	In the terminal window at the # prompt, enter: **cp /etc/hosts /jaz<CR>**	Makes a backup copy of the hosts file on the Jaz disk cartridge. A # prompt will return if the copy was successful and no write errors should be noted. If not returned to a # prompt or write errors are noted, the Jaz disk drive is not functioning correctly.
9	In the terminal window at the # prompt, enter: **ls –lrt /jaz<CR>**	Displays a directory listing of the /jaz directory with the most recent files listed at the bottom. The "hosts" file should be the last entry.
10	In the terminal window at the # prompt, enter: **umount /jaz<CR>**	Unmounts the Jaz disk cartridge. If at an MSCF workstation, this procedure is complete.
11	Press the button on the Jaz drive to eject the backup disk cartridge.	If this is an RPG, reinstall the original Archive III disk cartridge.

Notes for Figure 6–2 (RPG Fault Isolation Flowchart)

Step	Operator Action	System Response/Comments
12	If at an NWS RPG processor reinsert the Archive III disk. Then, on `Archive III Control/Status` window, click `Products` **Record** and `Status` **Record** in the `Auto Archive Control/Status` area. Click **Yes** when prompted.	If at an RPG, auto archive was stopped prior to performing this procedure and this restarts auto archive.

(4) CHECK FLOPPY DRIVE FUNCTIONALITY

Step	Operator Action	System Response/Comments
1	Insert a known good DOS or UNIX formatted floppy into the floppy drive.	Either type formatted floppy will work in the drive.
2	At a normal user prompt enter: **volcheck<CR>**	"volcheck" mounts the floppy disk in the drive.
3	At a normal user prompt, enter **mount<CR>**	Displays all mounted devices and disk partitions. The last mount entry should indicate `/floppy/unnamed_floppy` (or possible floppy volume name) is the mount point for `/vol/dev/diskette0/...` (the actual floppy. If a "floppy" entry is not observed, the floppy disk did not mount and the drive is defective.
4	At a normal user prompt, enter **cp /etc/hosts /floppy/floppyØ<CR>**	"/floppy/floppyØ" is just a consistent linked mount point, whether the floppy is "unnamed" or actually has a volume name.

Notes for Figure 6–2 (RPG Fault Isolation Flowchart)

Step	Operator Action	System Response/Comments
5	At a normal user prompt, enter: **ls –lrt /floppy/floppyØ/*<CR>**	Displays a directory listing of the /floppy/floppyØ disk. The "*" is necessary in this case to get past the link. The "hosts" file should be the last entry in the main floppy disk directory list (sub–directory lists may be present also).
6	At a normal user prompt, enter: **eject<CR>**and click **OK** when prompted that the floppy disk can be manually ejected.	Unmounts the floppy disk. This procedure is complete.

(5) CHECK CD–ROM DRIVE FUNCTIONALITY

Step	Operator Action	System Response/Comments
1	Insert the Full System Load CD into the CD–ROM drive and close the cradle.	Any known good CD should work (e.g., the Technical Manual Distribution CD). The CD should auto–mount and a File Manager window should appear.
2	Click on any file within the File Manager window to select it (not a folder).	This file will be used to test a copy of the file from the CD.
3	At the top of the File Manager window, click **Selected ▶ Copy to ...**.	Will allow for the selected file to be copied off of the CD.
4	Use the mouse to highlight the entire path in the `Destination Folder:` box. Then enter: **~<CR>**	The home directory (~) is selected as the destination point. As soon as <CR> is entered, the file is copied.
5	Go to a normal terminal window at a normal user prompt (not a root # prompt) and enter: **cd /export/home/***user_login_name***<CR>**	Changes to user's home directory.

Notes for Figure 6–2 (RPG Fault Isolation Flowchart)

Step	Operator Action	System Response/Comments
6	At user's home directory prompt, enter: **ls –lrt<CR>**	Displays a file listing with the latest file at the end of the listing. The copied file should be at the bottom of the list. Use the rm command to remove that specific file if desired.
7	On the File Manager window, click **File ▶ Eject** and retrieve the test CD from the CD–ROM drive.	This ejects the CD and closes the File Manager window.

6 CHECK DATE/TIME AT MSCF, RPG, OR BDDS

Step	Operator Action	System Response/Comments
1	At any MSCF Workstation terminal window prompt, enter: **date<CR>**	This displays the system date and time (GMT time, 24 hour clock). To remotely check the date/time of the RPG and/or BDDS processors from the MSCF, then continue with step 2. Otherwise, this procedure is complete.
2	To remotely check the date/time of the RPG, at an MSCF terminal window prompt, enter: **telnet rpg1<CR>** (or rpg2 for FAA Redundant only)	"telnet" will establish a remote connection to that processor. To check the BDDS processor time only, skip to step 5. Otherwise, continue with the next step.
3	At the `Login:` prompt, enter normal user account name and enter password when prompted.	All maintenance personnel should have user accounts on all processors.
4	Enter: **date<CR>**	This displays the system date and time (GMT time, 24 hour clock). To remotely check the date/time of the BDDS processor from the RPG, then continue with step 5. Otherwise, this procedure is complete. (Note: NWS and DoD sites will have BDDS units.)

Notes for Figure 6–2 (RPG Fault Isolation Flowchart)

Step	Operator Action	System Response/Comments
5	To remotely check the date/time of the BDDS, at an MSCF terminal window prompt or an RPG terminal window prompt, enter: **telnet bdds<CR>**	"telnet" will establish a remote connection to that processor.
6	At the `Login:` prompt, enter normal user account name and enter password when prompted.	All maintenance personnel should have user accounts on all processors.
7	Enter: **date<CR>**	This displays the system date and time (GMT time, 24 hour clock). This procedure is complete.
8	Enter: **exit<CR>**as many times as necessary to exit telnet session(s) and return to an MSCF prompt.	This displays the system date and time (GMT time, 24 hour clock). This procedure is complete.

7 VERIFY PROCESSOR GRAPHICS OPERABILITY

Step	Operator Action	System Response/Comments
1	If there is a BDDS (UD70A1) unit installed, then use the Raritan KVM switch to select the correct processor to test. If not already logged into the CDE, then login as a normal user.	The KVM switch is only installed when a BDDS processor is installed in the UD70 RPGPCA. If not able to login to the CDE, then keyboard or graphics problems exist and this procedure is complete.
2	Move the mouse around.	Moving mouse cursor visible on the screen.
3	Right click in the workspace background.	`Workspace Menu` appears. Proceed to step 5 if a terminal window or console window is already open on the desktop.
4	If a terminal or console window is not open on the desktop, on the `Workspace Menu`, click **Hosts ▶ This Host**.	New window opens.

Notes for Figure 6–2 (RPG Fault Isolation Flowchart)

Step	Operator Action	System Response/Comments
5	Click in a terminal or console window.	Cursor in window blinks.
6	Enter: **pwd<CR>**	Text is observed in window and system returns present working directory.

8 SHUTDOWN SUN PROCESSOR WITH GRAPHICS PROBLEMS

Step	Operator Action	System Response/Comments
1	Press the Power key in the very upper right of the Sun keyboard (circle with vertical line).	If the workstation was being used within the CDE, this may bring up the `Power Off Selection` graphical menu. If so, continue with the next step. However, if this doesn't work, the workstation was not being used in CDE, the CDE was "locked" when the graphics problem occurred, or the mouse is malfunctioning, this probably will not work. Proceed to step 3.
2	On the `Power Off Selection`, click **Shutdown**.	After approximately 15 seconds, the system should shutdown to an ok prompt. If so, this procedure is complete.
3	If the `Power Off Selection` graphical menu can not be used to shutdown the system, press the Standby button on the front of the Ultra 5/10 processor assembly (below green power LED).	No immediate response for approximately 50 seconds (Ultra 10 only) then another 20 seconds to complete the shutdown. The system should shutdown to an ok prompt. If none of this works correctly, keyboard or graphic problems may exist and this procedure is complete. Continue with the fault isolation checks.

Notes for Figure 6–2 (RPG Fault Isolation Flowchart)

9 VERIFY MOUSE & KEYBOARD OPERABILITY

Step	Operator Action	System Response/Comments
1	While viewing the CDE Login screen, move the mouse around.	Moving mouse cursor visible on the screen. If mouse appears non–functional, skip to step 9.
2	Click CDE window **Options**, hold button and scroll to select **Command Line Login** (release button to select).	CDE Login screen disappears and security information scrolls on screen. Mouse appears to be functional. If mouse appears non–functional, skip to step 9.
3	Enter a **<CR>**. At the login prompt, enter a normal user account name and associated password.	System prompt appears.
4	At the # prompt, enter: **cat > test<CR>** **cat test<CR>** **<Ctrl> D**	Makes a short file called "test" mainly to test the control key (<Ctrl>).
5	Push the power button on the front of the processor assembly. Wait about 30 seconds for a response on the screen.	No immediate response for approximately 50 seconds (Ultra 10 only) then another 20 seconds to complete the shutdown. Halts the system and system goes to an `ok` prompt.
6	At the `ok` prompt, enter: **reset–all<CR>**	Powers off/on system and reboots system.
7	When system starts to boot (three banner lines and `Initializing Memory` noted), simultaneously press the **Stop** and **A** keys.	System boot stops. This tests the Stop key.
8	At the `ok` prompt, enter: **boot –r<CR>**	System returns to the CDE Login screen. Keyboard appears functional if steps 3 through 8 work correctly.
9	If the mouse appears non–functional, attempt to login to the CDE as a normal user.	If not able to login to the CDE, then the keyboard appears non–functional and the mouse may only appear bad because of a defective keyboard.

Notes for Figure 6–2 (RPG Fault Isolation Flowchart)

(10) START NEW MSCF DISPLAY AT MSCF WORKSTATION/EVALUATE COMMS STATUS

Step	Operator Action	System Response/Comments
1	Kill the current MSCF display window at the MSCF workstation by double–clicking the **[–]** in the upper left hand corner.	Old display may have misleading Comms Status information.
2	At a terminal window, enter: **mscf &<CR>**	New MSCF display starts.
3	Evaluate the link indicators at the bottom of the display. They will either be red or green. At a minimum, there will be indicators for `rtr`, `lan`, `rpg`, and `network`. If a BDDS is part of this system then there will also be a `bdds` link indicator.	All link indicators should be green if the links are OK. Regardless, perform steps 4 and 5 to collect additional information.
	If this is an FAA Redundant system, there will also be link indicators for `rtr2`, `lan2`, and `rpg2`. For FAA Redundant systems, primarily evaluate the active channel.	For FAA Redundant systems, if the Router, LAN, and RPG links on one channel are OK but the other channel's indicators are not OK, then it would appear the active channel is OK but there may be an interchannel communication problem.

Notes for Figure 6–2 (RPG Fault Isolation Flowchart)

Step	Operator Action	System Response/Comments
4	On the MSCF display window, click **Comms Status**. If link information is displayed for the Cisco Switch, note status of RPG link (link 1). For FAA Redundant systems, use the Channel selector at the top of the MSCF display window to select the active channel (if necessary), wait approximately 30 seconds for the information to refresh, and then perform this step on the active channel.	If MSCF can not communicate with the LAN, no link information will be shown. This step just provides additional verification of the `lan` or `lan2` link indicator status shown in step 3. However, if the LAN link is up, it is important to note the `Comms Status`–displayed status of its associated RPG link (link 1) because this may or may not follow the link indicator depending on whether a possible RPG problem resides at the physical link layer or the logical link layer.
5	On the MSCF `Comms Status` window, click the ⬇ next to `Cisco Switch` and then click on **Cisco Router**.	Router link status should display. It may take up to one minute for link status to display. Display update is complete when device select list disappears. If the MSCF can not communicate with the Router, no link information will be shown. This step just provides additional verification of the `rtr` or `rtr2` link indicator status shown in step 3.

Notes for Figure 6–2 (RPG Fault Isolation Flowchart)

(11) KILL CURRENT MSCF RPG HCI AND START NEW ONE

Step	Operator Action	System Response/Comments
1	Double–click the [–] in the upper left corner of the HCI window. For FAA Redundant systems, kill the HCI for the channel being checked at this time.	The HCI closes. Since this HCI is displayed on this platform through the RSSD, this is all that is required to stop the HCI functionality. If an MSCF Display is already open, proceed to step 3.
2	If an MSCF Display is not available, go to a terminal window and enter: **mscf &<CR>**	The MSCF window is used to start a new HCI.
3	On the MSCF Display, click on **RPG HCI**. For FAA Redundant systems, select the appropriate channel first.	A new HCI appears. For DoD systems and either FAA channel, the display will not be complete for approximately one minute.

(12) ESTABLISH TELNET SESSION TO RPG AND RESTART RPG APPLICATIONS

Step	Operator Action	System Response/Comments
1	At an MSCF terminal window, enter: **telnet rpg<CR>** and login as a normal user. For FAA redundant systems, if Channel 2 is being checked channel, then enter: **telnet rpg2<CR>** to establish a telnet session to RPG 2 instead of RPG 1.	All users should have privileges to control the RPG software.
2	Within the telnet session established to the RPG, enter: **stop<CR>**	Wait for a prompt to reappear indicating the RPG software has stopped.
3	Within the telnet session established to the RPG, enter: **start<CR>**,	Wait for message `RPG startup completed`. The RPG is now started.
4	Within the telnet session window established to the RPG, enter: **exit<CR>**	Exits the telnet session to the RPG.

Notes for Figure 6–2 (RPG Fault Isolation Flowchart)

(13) ESTABLISH TELNET SESSION TO RPG, CLEANSTART RPG APPLICATIONS

Step	Operator Action	System Response/Comments
1	At an MSCF terminal window, enter: **telnet rpg<CR>** and login as a normal user. For FAA redundant systems, if Channel 2 is being checked, then enter: **telnet rpg2<CR>** to establish a telnet session to RPG 2 instead of RPG 1.	All users should have privileges to control the RPG software.
2	Within the telnet session window established to the RPG, enter: **stop<CR>**	This is an alias that will stop the RPG applications software

CAUTION

A clean start will reinitialize some system logs and product databases. This procedure should only be used when necessary to recover failed tasks or possibly recover from abnormal applications functionality.

3	Within the telnet session window established to the RPG, enter: **cleanstart<CR>**	This is an alias that will clean out the RPG's non–persistent data storage buffers and then start the RPG applications software. Wait for message `RPG startup completed`. The RPG is now started.
4	Within the telnet session window established to the RPG, enter: **exit<CR>**	Exits the telnet session to the RPG.

Notes for Figure 6–2 (RPG Fault Isolation Flowchart)

(14) ESTABLISH TELNET SESSION TO RPG AND REBOOT RPG PROCESSOR

SU

Step	Operator Action	System Response/Comments
1	At an MSCF terminal window, enter: **telnet rpg<CR>** and login as a normal user. For FAA redundant systems, if Channel 2 is being checked, then enter: **telnet rpg2<CR>** to establish a telnet session to RPG 2 instead of RPG 1.	All users should have privileges to control the RPG software.
2	Within the telnet session established to the RPG, become a Superuser and enter: **init 6<CR>**	This will reboot the RPG processor.
3	Simultaneously press **<Ctrl>** and **[**, then at the telnet> prompt, enter: **quit<CR>**	Ends the telnet session to the RPG since RPG is beginning a reboot sequence.

(15) REBOOT MSCF PROCESSOR

Step	Operator Action	System Response/Comments
1	Exit out of CDE by clicking **EXIT** on the CDE Control Panel and **OK** at the acknowledgement window.	Leave the CDE.
2	Push the power button on the front of the processor assembly. Wait about 30 seconds for a response on the screen.	Takes approximately 20 seconds to complete the shutdown. Halts the system and system goes to an `ok` prompt.
3	At the `ok` prompt, enter: **boot –r<CR>**	System boots.

(16) EVALUATE RPG ROUTER LINKS USING MSCF DISPLAY AT MSCF WORKSTATION

Step	Operator Action	System Response/Comments
1	Kill the current MSCF display window at the MSCF workstation by double–clicking the **[–]** in the upper left hand corner.	Old display may have misleading Comms Status information.
2	At a terminal window normal user prompt, enter: **mscf &<CR>**	New MSCF display starts.
3	On the MSCF display window, click **Comms Status**.	MSCF display `Comms Status` window opens.
4	On the MSCF `Comms Status` window, click the ⬇ next to `Cisco Switch` and then click on **Cisco Router**.	Router link status should display. It may take up to one minute for link status to display. Display update is complete when device select list disappears.
5	Verify the following link information is displayed for a given configuration:	Even if given links are not `up` (green), all basic link information should be shown for a specific configuration indicating the router is configured correctly. If this check is being done from the MSCF workstation and any information is displayed at all, then the MSCF link must already show a status of `up`.

DEVICE	DESCRIPTION NAME	RPG CONFIG
`lan_switch`	`FastEthernet0/0`	All
`local_mscf`	`FastEthernet0/1`	NWS only
`redundant_rtr`	`FastEthernet0/1`	FAA only
`distant_mscf`	`Serial2/0`	FAA/DoD only
BLANK	`BVI1`	All
`commercial_rda`	`Serial0/0`	NWS special
AWIPS LANOP	FastEthernet1/0	NWS only
Line 37 DEDIC	Serial 2/0	NWS only
Line 33 DEDIC	Serial 2/1	All
Line 34 DEDIC	Serial 2/2	All
Line 35 DEDIC	Serial 2/3	All
Line 36 DEDIC	Serial 2/4	All
Line 38 DIALIN	Serial 2/5	All
Line 39 DIALIN	Serial 2/6	All
Line 40 DIALIN	Serial 2/7	All

Notes for Figure 6–2 (RPG Fault Isolation Flowchart)

(17) REBOOT LAN AND ROUTER USING OUT–OF–BANDWIDTH POWER CONTROL

Step	Operator Action	System Response/Comments
1	At a terminal window at the MSCF workstation, enter: **telnet rtr 2129<CR>**. For an FAA Redundant system, if Channel 2 is/was the Active channel, enter: **telnet rtr2 2129<CR>**	This is an out–of–bandwidth power control function that does not require actual RPG LAN access.
2	Enter the site–specific RPGPCA Router (70/170A2) AUX port password as established by paragraph 6.6.5.3 step 13.m.	Each port on the router has its own password but the password may be the same for all ports at any given site. The AUX port is used as the out–of–bandwidth path to the power administrator.
3	Enter a **<CR>** to establish a terminal session to the power administrator (APC MasterSwitch). Then enter the appropriate login name and site–unique password.	The login name will be "pwradm" for single channel systems, "pwradm1" for FAA Redundant channel 1, and "pwradm2" for FAA Redundant channel 2.
4	Use the power administrator menus (under Device Manager) to issue an immediate reboot for the LAN (outlet 2) first. Then issue an immediate reboot for the Router (outlet 3).	LAN switch and router reboot.
5	If the router reboot does not automatically end the telnet session, enter: **Ctrl** and **]** simultaneously to stop the telnet session and then enter: **quit<CR>** at the telnet> prompt.	If the telnet session had already ended (returned to a normal prompt at the MSCF) this is not necessary. This procedure is complete; however, before proceeding to other checks, wait one minute for the LAN and router to fully reboot.

Notes for Figure 6–2 (RPG Fault Isolation Flowchart)

(18) REBOOT ROUTER USING OUT–OF–BANDWIDTH POWER CONTROL

Step	Operator Action	System Response/Comments
1	At a terminal window at the MSCF workstation, enter: **telnet rtr 2129<CR>**. For an FAA Redundant system, if Channel 2 is/was the Active channel, enter: **telnet rtr2 2129<CR>**	This is an out–of–bandwidth power control function that does not require actual RPG LAN access.
2	Enter the site–specific RPGPCA Router (70/170A2) AUX port password as established by paragraph 6.6.5.3 step 13.m.	Each port on the router has its own password but the password may be the same for all ports at any given site. The AUX port is used as the out–of–bandwidth path to the power administrator.
3	Enter a **<CR>** to establish a terminal session to the power administrator (APC MasterSwitch). Then enter the appropriate login name and site–unique password.	The login name will be "pwradm" for single channel systems, "pwradm1" for FAA Redundant channel 1, and "pwradm2" for FAA Redundant channel 2.
4	Use the power administrator menus (under Device Manager) to issue an immediate reboot for the Router (outlet 3).	Router reboots.
5	If the router reboot does not automatically end the telnet session, enter: **Ctrl** and **]** simultaneously to stop the telnet session and then enter: **quit<CR>** at the telnet> prompt.	If the telnet session had already ended (returned to a normal prompt at the MSCF this is not necessary. This procedure is complete; however, before proceeding to other checks, wait one minute for the router to fully reboot.

Notes for Figure 6–2 (RPG Fault Isolation Flowchart)

(19) EVALUATE RPG ROUTER LINKS USING MSCF DISPLAY AT RPG WORKSTATION

Step	Operator Action	System Response/Comments
1	At a terminal window normal user prompt at the RPG workstation, enter: **mscf &<CR>**	MSCF display starts. Even though the MSCF display is normally viewed at the MSCF workstation, it can be viewed at the RPG also.
2	On the MSCF display window, click **Comms Status**.	MSCF display `Comms Status` window opens.
3	On the MSCF `Comms Status` window, click the ⬇ next to `Cisco Switch` and then click on **Cisco Router**.	Router link status should display. It may take up to one minute for link status to display. Display update is complete when device select list disappears.
4	Verify the following link information is displayed for a given configuration:	Even if given links are not up (green), all basic link information should be shown for a specific configuration indicating the router is configured correctly. If this check is being done from the MSCF workstation and any information is displayed at all, then the MSCF link must already show a status of up.

DEVICE	DESCRIPTION NAME	RPG CONFIG
`lan_switch`	`FastEthernet0/0`	All
`local_mscf`	`FastEthernet0/1`	NWS only
`redundant_rtr`	`FastEthernet0/1`	FAA only
`distant_mscf`	`Serial2/0`	FAA/DoD only
BLANK	`BVI1`	All
`commercial_rda`	`Serial0/0`	NWS special
AWIPS LANOP	FastEthernet1/0	NWS only
Line 37 DEDIC	Serial 2/0	NWS only
Line 33 DEDIC	Serial 2/1	All
Line 34 DEDIC	Serial 2/2	All
Line 35 DEDIC	Serial 2/3	All
Line 36 DEDIC	Serial 2/4	All
Line 38 DIALIN	Serial 2/5	All
Line 39 DIALIN	Serial 2/6	All
Line 40 DIALIN	Serial 2/7	All

Notes for Figure 6–2 (RPG Fault Isolation Flowchart)

(20) REBOOT ROUTER WITH POWER SWITCH AND EVALUATE BOOT/OPERATION

Step	Operator Action	System Response/Comments
1	Use the power switch at the rear of the Router Assembly chassis UD70/170A2 and power it off/on. Then at front of router, monitor status lights.	If router boots OK, system status light (far left) should initially blink and then become solid green after about 40 seconds. For each module installed, a solid green `Ready` light should also be observed. 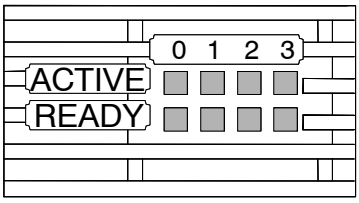 Router Assembly (A2) Front Panel LEDs
2	At rear of router, verify EN lights are illuminated on all installed cards.	The EN light should be lit indicating the module passed its self–test and is available for use. 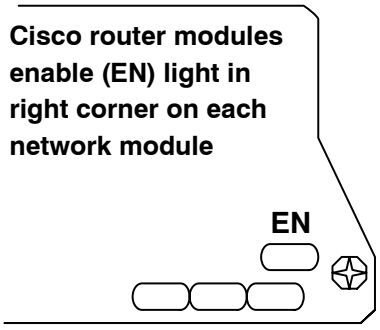

Notes for Figure 6–2 (RPG Fault Isolation Flowchart)

Step	Operator Action	System Response/Comments
3	Look at the serial module (A2A1A2) lights for ports 0 through 7. The mapping for each port is given below:	For normally connected dedicated lines 33 – 37, all lights for the corresponding port(s) should be lit for full operation.

Port	Function	RPG Type
1	Line 33	All
2	Line 34	All
3	Line 35	All
4	Line 36	All
5	Line 38	All
6	Line 39	All
7	Line 40	All
0	Distant MSCF	DoD/FAA
0	Line 37	NWS

For DoD systems and the FAA Redundant Active Channel, port 0 status light CN/LP should be lit for full Distant MSCF operation.

NOTE: It will not be possible to view the status lights for ports 4 – 7 when all cables are installed on the module. If any ports 4 – 7 are suspect, the cable(s) directly below the trouble port(s) may need to be temporarily removed to view the status lights.

4 Look at the network module lights in router slots 0 and 1 (A2A1A0 and A2A1A1, respectively.) On all systems, the link lights should be lit for the following LAN ports:

Lower Right Network Module Slot

A2A1A0	Function
FAST ETH 0	RPG LAN
FAST ETH 1	(FAA Only) CH1&2 Link
FAST ETH 1	(NWS Only) MSCF

Lower Left Network Module Slot

A2A1A1	Function
FAST ETH 0	(NWS Only) AWIPS
FAST ETH 1	Not Used

The FDX and 100Mbps lights may not be lit for connections to external systems (e.g., AWIPS). If the external equipment is configured for 100Mbps and/or full duplex, then the corresponding lights will be lit for the link.

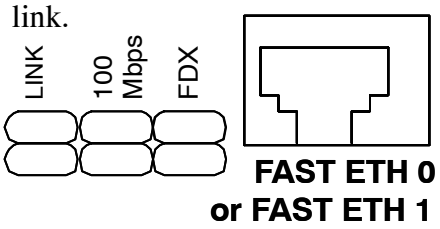

Notes for Figure 6–2 (RPG Fault Isolation Flowchart)

Step	Operator Action	System Response/Comments
5	Look at the status lights for installed WAN Interface Cards (WIC) in the 2FE2W network modules. The DSU/CSU WIC cards are labeled WIC 1DSU T1. Lower Left Network Module Slot A2A1A1 — Function W0 — Frame Relay Service DoD/FAA – for Distant MSCF NWS – for AWIPS W1 — Future ORDA Connection	The carrier light labeled CD (data carrier detect) should be lit for A2A1A1W0 when a Frame Relay Hub Router is connected to the RPG. The LP light is lit when the CSU is in loopback mode. The AL light is lit when a network alarm is detected (e.g., loss of network signal or frame or a network alarm is detected). 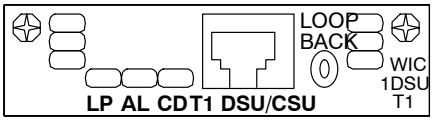

(21) ESTABLISH DIAL SESSION TO RDA RRRAT FOR REMOTE RPG REBOOT (DoD ONLY)

SU

Step	Operator Action	System Response/Comments
1	The dial to the RDA RRRAT will be performed using original PCAnywhere software. Use the original RRRAT (or office laptop with PCAnywhere software and a dial line) to dial and establish a desktop session to the RDA RRRAT.	Use established procedures provided by the RRRAT User's Guide.
2	After the dial session is established to the RDA RRRAT and its Windows desktop is displayed, open up HyperTerminal by clicking **Start ▶ Programs ▶ Accessories ▶ HyperTerminal**	HyperTerminal window opens.
3	Search for ICON indicating an interconnection to the RPG. If there is one, double–click on the icon. If not, initiate a new session (provide new session name such as "RPG Terminal") with a link speed of 38400, 8 data bits, no parity, and one stop bit (38400,8,N,1). After the communications parameters are set, click **File ▶ Save** to save the session (and new icon).	If this was done previously, the icon should already exist.
4	After the session connects and a login prompt is received, login as a normal user (i.e., user login account).	

Notes for Figure 6–2 (RPG Fault Isolation Flowchart)

Step	Operator Action	System Response/Comments
5	Become a Superuser by entering **su<CR>** and then the *root_password<CR>* when prompted.	Required to initiate RPG reboot.
6	Enter **init 6<CR>**	Reboots RPG.

22 STOP/START MSCF PPP, RESET MODEM, AND CHECK LINKS

Step	Operator Action	System Response/Comments
1	At an MSCF terminal window, become a Superusernormal user and then enter: **ppp_stop<CR>**.	Stops the MSCF PPP.
2	Use the UD71A5 modem power switch (ar rear) and power it off for five seconds, then back on.	Clears modem buffers.
3	At the MSCF terminal window, enter: **ppp_start<CR>**.	Starts the MSCF PPP.
4	At the MSCF terminal window, enter: **ping –s rtr<CR>** For FAA Redundant systems, if Channel 2 is being checked, enter: **ping –s rtr2<CR>**	Wait one minute. If link reestablishes, recurring “ping” responses should be observed within one minute.
5	At the MSCF terminal window, enter: **<Ctrl> C<CR>** to stop the ping.	If the step 4 ping was successful, then continue with the next step. If not, this procedure is complete.
6	At the MSCF terminal window, enter: **ping –s lan<CR>** For FAA Redundant systems, if Channel 2 is being checked, enter: **ping –s lan2<CR>**	Wait one minute. If link reestablishes, recurring “ping” responses should be observed.
7	At the MSCF terminal window, enter: **<Ctrl> C<CR>** to stop the ping.	If the step 6 ping was successful, then continue with the next step. If not, this procedure is complete.
8	At the MSCF terminal window, enter: **ping –s rpg<CR>** For FAA Redundant systems, if Channel 2 is being checked, enter: **ping –s rpg2<CR>**	Wait one minute. If link reestablishes, recurring “ping” responses should be observed.
9	At the MSCF terminal window, enter: **<Ctrl> C<CR>** to stop the ping.	Procedure is complete.

Notes for Figure 6–2 (RPG Fault Isolation Flowchart)

23 REBOOT MSCF AND MONITOR FOR ERRORS

Step	Operator Action	System Response/Comments
1	Exit out of CDE by clicking **EXIT** on the CDE Control Panel and **OK** at the acknowledgement window.	Leave the CDE.
2	Push the power button on the front of the processor assembly.	Takes approximately 20 seconds to complete the shutdown. Halts the system and system goes to an `ok` prompt.
3	At the `ok` prompt, enter: **boot –r<CR>**	System boots.
4	Carefully monitor the boot process display for any errors. If necessary, reboot processor again to monitor for errors.	No errors should be noted. The following listing provides an example of a "clean" reboot. Future flowchart "Decision point" possible problem areas are noted by *`ERROR NOTE`* references and possible errors are listed before the example boot sequence. If an UPS is not directly connected to this system, see the (NOTE) reference at the end of the example.

ERROR NOTES:

1. Could indicate configuration error on hme0.
2. This error message is normal on a Distant MSCF
3. Could indicate a problem with starting the ppp interface(s) (Distant MSCF only).
4. Somewhere near this time, could indicate a `link down` message on hme0. Watch from this point for four or five lines.
5. Could indicate an error when checking the Jaz disk or setting permissions.

Notes for Figure 6–2 (RPG Fault Isolation Flowchart)

Example of good MSCF reboot:

```
Sun Ultra 5/10 UPA/PCI (UltraSPARC–IIi 400MHz), Keyboard Present
OpenBoot 3.25, 256 MB (50 ns) memory installed, Serial #16090789.
Ethernet address 8:0:20:f5:86:a5, Host ID: 80f586a5.

Initializing Memory
Boot device: /pci@1f,0/pci@1,1/ide@3/disk@0,0:a  File and args:
SunOS Release 5.8 Version Generic_108528–27 64–bit
Copyright 1983–2003, Sun Microsystems, Inc.  All rights reserved.
configuring IPv4 interfaces: hme0.                          (ERROR NOTE 1)
Hostname: mscf–roc3
SIOCSIFDSTADDR: IFF_POINTOPOINT not set                     (ERROR NOTE 2)
The system is coming up.  Please wait.
checking ufs filesystems
/dev/rdsk/c0t0d0s4: is clean.
/dev/rdsk/c0t0d0s5: is clean.
/dev/rdsk/c0t0d0s7: is clean.
starting ppp: ipdptp0.                                      (ERROR NOTE 3)
Setting local Solaris kernel changes –ndd Tuning
NIS domainname is nexrad.noaa.gov
starting rpc services: rpcbind keyserv done.
Setting netmask of hme0 to 255.255.255.128                  (ERROR NOTE 4)
Setting default IPv4 interface for multicast: add net 224.0/4 gateway mscf–roc3
syslog service starting.
Print services started.
volume management starting.
Feb  3 20:10:46 mscf–roc3 upsd[257]: Unable to communicate with UPS  (SEE NOTE AT
                                                                      END)

PowerChute Plus for Unix, v4.2.3: Copyright 1998, American Power Conversion
tarting audit daemon
Configured 229 kernel events.
Checking /jaz filesystem                                    (ERROR NOTE 5)
Checking permissions on /jaz
Setting NEXRAD eeprom settings...
The system is ready.
```

Notes for Figure 6–2 (RPG Fault Isolation Flowchart)

** WARNING ** WARNING ** WARNING ** WARNING ** WARNING **

This is a U.S. Government system for authorized use only (Public Law 99–474). No authorized or unauthorized user has an explicit or implicit expectation of privacy. Unauthorized or improper use of this system may result in disciplinary action and civil and criminal penalties.

All uses of and files on this system may be intercepted, inspected, monitored, recorded, audited, copied, and disclosed to authorized site, Federal Government, law enforcement, and other domestic and foreign agency's personnel. Using this system indicates your awareness of and consent to such interception, inspection, monitoring, recording, auditing, copying, and disclosure at the discretion of authorized personnel. LOG OFF NOW if you do not agree to the conditions of this warning. Report suspected violations to the System Security Officer.

** WARNING ** WARNING ** WARNING ** WARNING ** WARNING **

****

* Starting Desktop Login on display :0...
** Wait for the Desktop Login screen before logging in.

****

**********<u>Displays CDE Login Screen</u>**********

NOTE: By default, all Sun Processors used as part of this system come with the PowerChute software installed just in case an APC Smart UPS is attached. Normally, only the RPG processor actually has a serial connection to an UPS; therefore, the noted error–type indication shown above is considered normal for any BDDS or MSCF that does not have its own Smart UPS. Should this MSCF be installed in a building location not serviced by a building UPS, then a separate APC Smart UPS could be utilized and connected with a serial cable.

Notes for Figure 6−2 (RPG Fault Isolation Flowchart)

(24) REBOOT FRAME RELAY HUB ROUTER AND EVALUATE BOOT/OPERATION

Step	Operator Action	System Response/Comments
1	Use the power switch at the rear of the Frame Relay Hub Router Assembly chassis UD75 and power it off/on. Then at front of router, monitor status lights.	If router boots OK, the POWER indicator light (far left) should be green. The RPS light should be off. The ACTIVITY light should blink while the router is booting and while system activity is occurring. 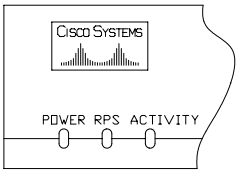
2	At rear of router, verify EN light is illuminated on the 4−port Ethernet module (ETHERNET 4E).	The EN light should be lit indicating the module passed its self−test and is available for use. 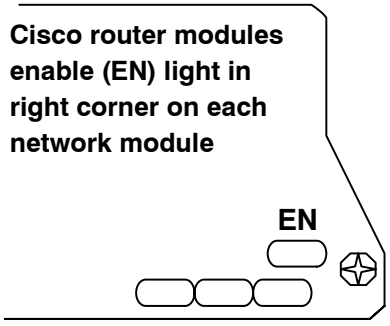

Notes for Figure 6–2 (RPG Fault Isolation Flowchart)

Step	Operator Action	System Response/Comments
3	Look at the 4–port Ethernet module (UD75A1A1) Ethernet ports 0 through 3. The mapping for each port is given below for frame relay service to a DoD radar (except OCONUS and Vandenberg AFB): Port — Function 1 — Distant MSCF #1 2 — Distant MSCF #2* 3 — NWSNet 0 — MSCF Printer The mapping for each port is given below for frame relay service to one or multiple FAA radars. Port — Function 1 — Distant MSCF #1 2 — Distant MSCF #2* 3 — Distant MSCF #3* 0 — Distant MSCF #4* *site dependent	For each port with a connection to it, the LINK and ACTIVITY lights corresponding to it should be lit or blinking. If any ports are suspect, a cable associated with a known working Ethernet port on the 4–port module can be used to verify a port failure. If it is determined that one or more ports have failed, the entire Frame Relay Hub Router will need to be replaced.

Notes for Figure 6–2 (RPG Fault Isolation Flowchart)

Step	Operator Action	System Response/Comments
4	Look at the status lights for installed WAN Interface Card (WIC) (UD75A1W0). The DSU/CSU WIC card is labeled WIC 1DSU T1. Upper Right Network Module Slot UD75A1 — Function W0 — WFO supporting DoD/FAA only Frame Relay Telco Smart Jack	The carrier light labeled CD (data carrier detect) should be lit for 75A1W0 when a connection is established to the Frame Relay Hub Router. The LP light is lit when the CSU is in loopback mode. The AL light is lit when a network alarm is detected (e.g., loss of network signal or frame or a network alarm is detected). 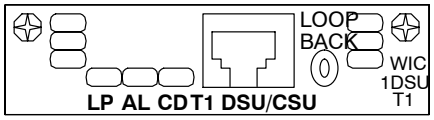 If the carrier light is not lit, check the cable between the WIC module and Frame Relay Telco Smart Jack. If the cable is good, reload frame relay hub router software. If that does not work, replace frame relay hub router.

25 VERIFY FRAME RELAY SERVICE IS UP

Step	Operator Action	System Response/Comments
1	Perform Note 24	This reboots and checks the frame relay hub router configuration.
2	At the Distant MSCF terminal window, enter: **telenet frhubrtr<CR>**	The frame relay hub router should respond if the physical connection is okay.
3	At the `Password:` prompt, enter: *site selected password***<CR>**	

Step	Operator Action	System Response/Comments
4	At the `frhubrtr>` prompt, enter: **enable<CR>**	
5	At the `Password:` prompt, enter: *site selected password***<CR>**	
6	At the frhubrtr# prompt, enter: **show int S0/0<CR>**	If the line is down, the problem may be due to a telco outage. If the line is up, but there is a problem with connectivity to AWIPS, proceed to Note 65.

(26) VERIFY RPG FUNCTIONALITY

Step	Operator Action	System Response/Comments
1	If there is a BDDS (UD70A1) installed, then use the Raritan KVM switch to select the RPG processor to test.	The KVM switch is only installed when a BDDS processor is installed in the UD70 RPGPCA.
2	If not already logged into CDE, then login as a normal user into CDE.	Wait for CDE desktop to appear.
3	In a terminal window, enter **rpg_ps<CR>** and evaluate task table.	No tasks should show a FAIL condition. If not, RPG is not fully functional.
4	In a terminal window, enter **mscf &<CR>**.	`Master System Control Functions` window (MSCF Display) should appear. If not, RPG is not functional.
5	On the `Master System Control Functions` window, click **Comms Status**.	`Comms Status` window should appear with Cisco switch links (24 total) shown. If not, RPG is not functional. Note links `up` for future reference.
6	On the `Master System Control Functions` window, click **RPG HCI** On an FAA Redundant system, select the appropriate channel first.	HCI should appear. Wideband link should be connected (white or green). `RPG State`: should be `Operate`. If not, RPG may not be functional.

Notes for Figure 6–2 (RPG Fault Isolation Flowchart)

Step	Operator Action	System Response/Comments
7	Using the HCI, perform a wideband disconnect/reconnect. If wideband is connected, attempt changing RDA state from Operate to Standby or Standby to Operate (available on Active channel only of FAA Redundant system).	If wideband state can not be affected, the RPG is not functional. If state can be affected to some degree, but the wideband will not connect, the RPG is OK and a wideband problem exists. If Standby or Operate commands are not accepted, the RPG is not functional assuming wideband is good and RPG has control of the RDA (`RPG` in Operate or `Either` in Standby).

(27) REBOOT RPG AND MONITOR FOR ERRORS

Step	Operator Action	System Response/Comments
1	If there is a BDDS (UD70A1) installed, then use the Raritan KVM switch to select the RPG processor to test.	The KVM switch is only installed when a BDDS processor is installed in the UD70 RPGPCA.
2	Exit out of CDE by clicking **EXIT** on the CDE Control Panel and **OK** at the acknowledgement window.	Leave the CDE.
3	Push the power button on the front of the processor assembly.	Takes approximately 20 seconds to complete the shutdown. Halts the system and system goes to an `ok` prompt.
4	At the `ok` prompt, enter: **boot –r<CR>**	System boots.
5	Carefully monitor the boot process display for any errors. If necessary, reboot processor again to monitor for errors.	No errors should be noted. The following listing provides an example of a “clean” reboot. Future flowchart “Decision point” possible problem areas are noted by *`ERROR NOTE`* references and possible errors are listed before the example boot sequence.

Notes for Figure 6–2 (RPG Fault Isolation Flowchart)

ERROR NOTES:

1. Could indicate an error for “driver/mh”
2. Could indicate configuration error on hme0.
3. Somewhere near this time, could indicate a `link down` message on hme0. Watch from this point for four or five lines.
4. Could indicate an error when checking the Jaz disk or setting permissions.

Example of good RPG reboot:

```
Sun Ultra 5/10 UPA/PCI (UltraSPARC–IIi 440MHz), Keyboard Present
OpenBoot 3.19, 256 MB (50 ns) memory installed, Serial #11598044.
Ethernet address 8:0:20:b0:f8:dc, Host ID: 80b0f8dc.

Initializing Memory
Boot device: /pci@1f,0/pci@1,1/ide@3/disk@0,0:a  File and args:
SunOS Release 5.8 Version Generic_108528–27 64–bit
Copyright 1983–2003, Sun Microsystems, Inc.  All rights reserved.
NOTICE: MAGMA PCI driver 5.0 (32/64 bit)  for MAGMA 4 PCI DMA instance 0
NOTICE: hboard offset is 0x110                          (ERROR NOTE 1)
configuring IPv4 interfaces: hme0.                      (ERROR NOTE 2)
Hostname: rpg1–roc3

The system is coming up.  Please wait.
checking ufs filesystems
/dev/rdsk/c0t0d0s4: is clean.
/dev/rdsk/c0t0d0s5: is clean.
/dev/rdsk/c0t0d0s7: is clean.
starting ppp (no interface defined).
Setting local Solaris kernel changes –ndd Tuning
NIS domainname is nexrad.noaa.gov
starting rpc services: rpcbind keyserv done.
Setting netmask of hme0 to 255.255.255.128              (ERROR NOTE 3)
Setting default IPv4 interface for multicast: add net 224.0/4 gateway rpg1–roc3
syslog service starting.
Print services started.
volume management starting.

PowerChute Plus for Unix, v4.2.3: Copyright 1998, American Power Conversion


starting audit daemon
Configured 229 kernel events.
Checking /jaz filesystem                                (ERROR NOTE 4)
Checking permissions on /jaz
Setting NEXRAD eeprom settings...
Checking MLOS serial port settings
The system is ready.
```

Notes for Figure 6–2 (RPG Fault Isolation Flowchart)

** WARNING ** WARNING ** WARNING ** WARNING ** WARNING **

This is a U.S. Government system for authorized use only (Public Law 99–474). No authorized or unauthorized user has an explicit or implicit expectation of privacy. Unauthorized or improper use of this system may result in disciplinary action and civil and criminal penalties.

All uses of and files on this system may be intercepted, inspected, monitored, recorded, audited, copied, and disclosed to authorized site, Federal Government, law enforcement, and other domestic and foreign agency's personnel. Using this system indicates your awareness of and consent to such interception, inspection, monitoring, recording, auditing, copying, and disclosure at the discretion of authorized personnel. LOG OFF NOW if you do not agree to the conditions of this warning. Report suspected violations to the System Security Officer.

** WARNING ** WARNING ** WARNING ** WARNING ** WARNING **

****
*
* Starting Desktop Login on display :0...
*
* Wait for the Desktop Login screen before logging in.
*

****

**********Displays CDE Login Screen**********

Notes for Figure 6–2 (RPG Fault Isolation Flowchart)

(28) VERIFY BDDS FUNCTIONALITY

SU

Step	Operator Action	System Response/Comments
1	If this is a BDDS (UD70A1), then use the Raritan KVM switch to select the Local BDDS processor to test.	The KVM switch is only installed when a BDDS processor is installed in the UD70 RPGPCA.
2	If not already logged into CDE, then login as a normal user into CDE.	Wait for CDE desktop to appear.
3	In a normal terminal window, become a Superuser and then enter: **cd /bdds<CR>** **./wbstat<CR>**	Verify that the BDDS software is running. The system will display a `BDDS Active Processes` table and the four normal active processes (`wbserver`, `convert`, `brecv`, and `wbcontrol`) should be listed. This indicates that the base data server is running. If all four lines are not seen, the BDDS is not functional.
4	In the same terminal window, enter: **ping rpg<CR>**	Response `rpg is alive` should be received. If not, the BDDS is considered not functional because base data can not be received for redistribution.

(29) REBOOT BDDS AND MONITOR FOR ERRORS

Step	Operator Action	System Response/Comments
1	Use the Raritan KVM switch to select the BDDS Processor (UD70A1) to test.	The KVM switch is only installed when a BDDS processor is installed in the UD70 RPGPCA.
2	Exit out of CDE by clicking **EXIT** on the CDE Control Panel and **OK** at the acknowledgement window.	Leave the CDE.

Notes for Figure 6–2 (RPG Fault Isolation Flowchart)

Step	Operator Action	System Response/Comments
3	Push the power button on the front of the processor assembly.	Takes approximately 20 seconds to complete the shutdown. Halts the system and system goes to an `ok` prompt.
4	At the `ok` prompt, enter: **boot –r<CR>**	System boots.
5	Carefully monitor the boot process display for any errors. If necessary, reboot processor again to monitor for errors.	No errors should be noted. The following listing provides an example of a "clean" reboot. Future flowchart "Decision point" possible problem areas are noted by *`ERROR NOTE`* references and possible errors are listed before the example boot sequence. If an UPS is not directly connected to this system, see the (NOTE) reference at the end of the example.

ERROR NOTES:

1. Could indicate configuration error on hme0 or hme1.
2. Somewhere near this time, could indicate a `link down` message on hme0 or hme1. Watch from this point for four or five lines.
3. Could indicate an error when checking the Jaz disk or setting permissions. Normally, the BDDS does not have a Jaz drive connected, in which case no disk error messages could be noted at this point.

Example of good BDDS reboot:

```
Sun Ultra 5/10 UPA/PCI (UltraSPARC–IIi 400MHz), Keyboard Present
OpenBoot 3.25, 128 MB (50 ns) memory installed, Serial #13008420.
Ethernet address 8:0:20:c6:7e:24, Host ID: 80c67e24.

Initializing Memory
Boot device: /pci@1f,0/pci@1,1/ide@3/disk@0,0:a  File and args:
SunOS Release 5.8 Version Generic_108528–27 64–bit
Copyright 1983–2003, Sun Microsystems, Inc.  All rights reserved.
configuring IPv4 interfaces: hme0 hme1.                    (ERROR NOTE 1)
Hostname: bdds–roc3
The system is coming up.  Please wait.
checking ufs filesystems
```

```
/dev/rdsk/c0t0d0s4: is clean.
/dev/rdsk/c0t0d0s5: is clean.
/dev/rdsk/c0t0d0s7: is clean.
starting ppp (no interface defined).
Setting local Solaris kernel changes –ndd Tuning
NIS domainname is nexrad.noaa.gov
starting rpc services: rpcbind keyserv done.
Setting netmask of hme0 to 255.255.255.128
Setting netmask of hme1 to 255.255.255.0                    (ERROR NOTE 2)
Setting default IPv4 interface for multicast: add net 224.0.0.0: gateway bdds–roc3
syslog service starting.
Print services started.
volume management starting.
Feb 3 19:56:24 bdds–roc3 upsd[250]: Unable to communicate with UPS (SEE NOTE AT END)

PowerChute Plus for Unix, v4.2.3: Copyright 1998, American Power Conversion

starting audit daemon
Configured 229 kernel events.
Checking /jaz filesystem                                    (ERROR NOTE 3)
Checking permissions on /jaz
Setting NEXRAD eeprom settings...
Starting ORPG Base Data Distribution Server
[1] 304
The system is ready.

** WARNING ** WARNING ** WARNING ** WARNING ** WARNING **
_____________________________________________________________

This is a U.S. Government system for authorized use only
(Public Law 99–474).  No authorized or unauthorized user
has an explicit or implicit expectation of privacy.
Unauthorized or improper use of this system may result in
disciplinary action and civil and criminal penalties.

All uses of and files on this system may be intercepted,
inspected, monitored, recorded, audited, copied, and
disclosed to authorized site, Federal Government, law
enforcement, and other domestic and foreign agency's
personnel.  Using this system indicates your awareness of
and consent to such interception, inspection, monitoring,
recording, auditing, copying, and disclosure at the
discretion of authorized personnel.  LOG OFF NOW if you
do not agree to the conditions of this warning.  Report
suspected violations to the System Security Officer.

_____________________________________________________________
** WARNING ** WARNING ** WARNING ** WARNING ** WARNING **
```

Notes for Figure 6–2 (RPG Fault Isolation Flowchart)

```
*************************************************************************
*
* Starting Desktop Login on display :0...
*
* Wait for the Desktop Login screen before logging in.
*
*************************************************************************
```

**********Displays CDE Login Screen**********

NOTE: By default, all Sun Processors used as part of this system come with the PowerChute software installed just in case an APC Smart UPS is attached. Normally, only the RPG processor actually has a serial connection to an UPS; therefore, the noted error–type indication shown above is considered normal for any BDDS or MSCF that does not have its own Smart UPS.

(30) PROCESSOR EVALUATION FOR MOTHERBOARD PROBLEMS

Any of the following would indicate a motherboard type problem:

- Continuous scrolling error messages.
- Multiple State Exception messages, such as `RED State Exception` with displayed memory register dumps for “TL”, “TT”, “TPC”, “TnPC”, or “TSTATE”. (Probable memory or memory controller failed.)
- Any messages such as:

  NVRAM Battery Detect Test
  MESSAGE=NVRAM Low Battery

  NVRAM Scratch Addr Test
  MESSAGE=Data miss compare

  NVRAM Scratch Data Test
  MESSAGE=Data miss compare

Notes for Figure 6–2 (RPG Fault Isolation Flowchart)

(31) USE MSCF POWER CONTROL TO REBOOT RDA/RPG GATEWAY

Step	Operator Action	System Response/Comments
1	If an MSCF Display is already open on the MSCF Workstation monitor, proceed to step 2. Otherwise, at any MSCF terminal window, as a normal user, enter: **mscf &<CR>**	An MSCF Display will normally be open at the MSCF Workstation. If one is started, it will take approximately 30 seconds to appear.
2	On the MSCF Display, click **Power Control** and then click the **RDA/RPG Gateway** outlet to select it (highlights yellow).	
3	Click the **Reboot** button and click **Yes** when prompted.	The outlet will turn red for five seconds and then revert back to its normal color. This indicates that power was removed from the device and then restored, thus effecting a reboot of the device.

(32) CHECK PROCESSOR SCSI FUNCTIONALITY

Step	Operator Action	System Response/Comments
1	If at a CDE Login screen (see Figure 4–9 for example), then proceed to step 3. If within the CDE, continue with the next step.	The system will be halted and it's better to get out of the CDE before that happens.
2	Exit out of CDE by clicking **EXIT** on the CDE Control Panel and **OK** at the acknowledgement window.	Leave the CDE.
3	Push the power button on the front of the processor assembly.	No immediate response for approximately 50 seconds (Ultra 10 only) then another 20 seconds to complete the shutdown. Halts the system and system goes to an `ok` prompt (after approximately 30 seconds).

Notes for Figure 6–2 (RPG Fault Isolation Flowchart)

Step	Operator Action	System Response/Comments
4	At the ok prompt, enter: **setenv auto–boot? false<CR>**, then enter: **reset–all<CR>**	The SCSI test will not work correctly after being halted, even with an init 0 command. Thus, auto–boot is turned off and then the system is reset to reinitialize it cleanly.
5	After the system resets and returns to an ok prompt, enter: **probe–scsi–all<CR>**	probe–scsi–all will look for all SCSI devices, including devices connected on the SCSI bus. Wait approximately one minute for "probe" to complete (returned to an ok prompt). The displays should output one information line if it finds the SCSI card, a second information line if the card appears operable, and a third and fourth line for the Jaz Disk drive. If returned to an ok prompt (even without any SCSI information lines returned by the probe), then proceed to step 7.
6	If the system does not return to an ok prompt, then enter **Stop–A** (simultaneously press the Stop and A keys).	
7	If only two lines were shown but the Jaz disk was not found (3rd and fourth lines), then return to the fault isolation flowcharts before completing this procedure.	To further check the Jaz drive, this check will be redone. When completed for the final time, then perform the last step (step 8).
8	At the ok prompt, enter: **setenv auto–boot? true<CR>**, followed by: **reset–all<CR>**	Auto–boot is turned back on and the system is reinitialized.

Notes for Figure 6–2 (RPG Fault Isolation Flowchart)

(33) PERFORM PRINTER SELF–TEST (TEST PRINT)

Step	Operator Action	System Response/Comments
1	On the printer's front panel, press the **Help** button.	`Help Guide` will appear.
2	Press the **--->** button until `Supplies Information` appears.	
3	Press the **Menu** button.	`Supplies Page` appears.
4	Press the **Print** button.	It may take 8 to 10 minutes while the printer warms up. Wait for the Supplies Page to print. The front panel will read `Ready` when printing is complete.

(34) CHECK MSCF hme0 CONFIGURATION (DoD or FAA MSCF) WITHOUT FRAME RELAY

At an MSCF terminal window, enter **ifconfig –a<CR>**. Verify hme0 is correct as shown in the following example:

```
lo0: flags=849<UP,LOOPBACK,RUNNING,MULTICAST> mtu 8232
        inet 127.0.0.1 netmask ff000000
hme0: flags=851<UP,POINTOPOINT,RUNNING,MULTICAST> mtu 1500
        inet 172.25.===.23 --> 172.25.===.21 netmask ffffff80
ipdptp0: flags=8d1<UP,POINTOPOINT,RUNNING,NOARP,MULTICAST> mtu 1500
        inet 172.25.===.20 --> 172.25.===.0 netmask ffffff80
ipdptp1: flags=8d0<POINTOPOINT,RUNNING,NOARP,MULTICAST> mtu 1500
        inet 172.25.===.26 --> 172.25.===.28 netmask ffffff80
```

... where === is the site–unique subnet ID.

Notes for Figure 6–2 (RPG Fault Isolation Flowchart)

(35) CHECK MSCF hme0 CONFIGURATION (DoD or FAA MSCF) WITH FRAME RELAY

Step	Operator Action	System Response/Comments
1	At Distant MSCF terminal window, enter: **ping –s frhubrtr<CR>**	Wait one minute. If link is established, response should be observed within one minute.
2	Enter: **ping –s printer<CR>**	Wait one minute. If link is established, response should be observed within one minute. If you can ping the frame relay hub router and the MSCF printer, there is not a physical problem. However, there may be a configuration problem. Reboot one or both devices and repeat steps 1 and 2. If there is still a problem, check configuration of printer. If it is correct, replace printer.
3	Check cable between the frame relay hub router and the MSCF printer.	If you can ping the frame relay hub router but not the MSCF printer, there may be a problem with the cable. If the cable checks out okay, proceed to Note 36.

(36) REBOOT AND MONITOR FOR hme0 ERRORS

Step	Operator Action	System Response/Comments
1	Exit out of CDE by clicking **EXIT** on the CDE Control Panel and **OK** at the acknowledgement window.	Leave the CDE.
2	Push the power button on the front of the processor assembly. Wait about 30 seconds for a response on the screen.	No immediate response for approximately 50 seconds (Ultra 10 only) then another 20 seconds to complete the shutdown. Halts the system and system goes to an `ok` prompt (after approximately 30 seconds).

Notes for Figure 6–2 (RPG Fault Isolation Flowchart)

Step	Operator Action	System Response/Comments
3	At the `ok` prompt, enter: **boot –r<CR>**	System boots.
4	Carefully monitor the boot process display for any hme0 errors. If necessary, reboot processor again to monitor for errors.	When the system boots, there should be an `configuring network interfaces: hme0` indication on approximately the fourth line of the boot sequence (immediately following copyright line). Also, while the system completes booting, no additional `SUNW,hme0: Link Down - cable problem?` messages should be noted.

(37) ACTIVATE SNMP DISPLAY FOR STATUS INDICATIONS

If an MSCF Display is not already open, enter **mscf &<CR>** at a workstation terminal window. Wait for the MSCF display to appear then view status as follows:

COMM STATUS: Click `Comms Status` at top of display then use the pull down menu to select status for the Cisco Switch or Cisco Router. If the window was already open, click **Update** to retrieve new Comms Status information.

POWER CONTROL: Click **Power Control** at top of display to view Power Administrator outlet status.

TRAP LOG MESSAGES: Trap log (Hardware Status/Warnings) is displayed on the middle portion of the window.

(38) USE ETHERNET CABLE CHECKER

Disconnect both ends of “suspect” ethernet cable. Connect one half of the cable checker to each end of the cable. Ensure GND button is OFF and then press the power button on transmit end of cable checker. Red light should be blinking. (Note: If checking long cables, ensure battery is fresh.)

Monitor the terminator on the other end of cable. Lights should blink green from top–to–bottom for straight–through blue cables (pairs 1&2, 3&6, 4&5, 7&8). For the red swapped cables, the lights should blink green in a sequence pattern of either 3&6, 1&2, 4&5, 7&8 or 3&6, 1&2, 7&8, 4&5. At a minimum, the two 10BASE–T pairs (wire pairs 1&2, 3&6) should always show a good status. The status (or even sequence order) of pairs 4&5, 7&8 is not really relevant since these pairs are not used.

(39) INITIALIZE OBDIAGs AND TEST FLOPPY DRIVE

SU

Step	Operator Action	System Response/Comments
1	At the ok prompt, enter: **setenv mfg–mode on<CR>** **setenv diag–switch? true<CR>** **setenv auto–boot? false<CR>**	Sets parameters required to run OBDIAGs.
2	At the ok prompt, enter: **reset–all<CR>**	This effectively powers the processor off and back on. The screen may be blank for a short time while the POST completes. An ok prompt should appear.
3	At the ok prompt, enter: **obdiag<CR>**	The OBDIAG Menu will appear.
4	At the test menu prompt, enter: **16<CR>** **18<CR>**	Enables script debug messages and disables external loopback tests.
5	Insert a formatted floppy disk (DOS format OK) into floppy drive. Use a known good floppy disk. If possible, check disk for write/read capability on a DOS machine first. Ensure disk is not write protected (locked).	DOS–formatted floppy disks work in Sun machines.

6	At the test menu prompt, enter:
	5<CR> If test is successful, the system should indicate:
	`TEST='floppy_test'`
	`SUBTEST='floppy_id0_read_test'`
		Runs floppy test. Note any error messages displayed.

7	At the test menu prompt, enter: **14<CR>**	Exits out of OBDAIG.
8	At the ok prompt, enter: **set–defaults<CR>**	This will reset all NVRAM parameters back to default.
9	At the ok prompt, enter: **reset–all<CR>**	System will boot.

(40) EVALUATE SYSTEM FOR PRODUCT DISTRIBUTION PROBLEMS

Step	Operator Action	System Response/Comments
1	At the MSCF RPG HCI, click `RPG` **Status**	No Maintenance Required `Task Failure` or `Distribution` alarm should be evident.
2	At an MSCF terminal window prompt, enter: **telnet rpg<CR>**. When prompted, enter login name and password. For FAA Redundant systems, enter **telnet rpg2<CR>** if Channel 2 is the active channel.	Login to the RPG as a normal user.
3	If fault isolation is specifically for X.25 product distribution problems (lines 1 – 24), at the RPG prompt, enter: **ps –ef | grep cm_uconx<CR>** Also, complete step 5.	Three active communications server tasks titled “cm_uconx” should be listed. If not, a problem exists with one or more of these tasks. There are 8 product user lines assigned to each instance as follows: 1 – 8 (dial–in) 9 – 16 (dedicated) 17 – 24 (dedicated).
4	If fault isolation is specifically for TCP product distribution problems (lines 25 – 40), at the RPG prompt, enter: **ps –ef | grep cm_tcp<CR>** Also, complete step 5.	Three active communications server tasks titled “cm_tcp” should be listed. If not, a problem exists with one or more of these tasks. The product user lines are assigned to an instance of cm_tcp as follows: 25 – 32 33 – 37 (dedicated) 38 – 40 (dial–in).

Notes for Figure 6–2 (RPG Fault Isolation Flowchart)

Step	Operator Action	System Response/Comments
5	At the RPG prompt, enter: **ps –ef | grep p_server<CR>**	Five active product distribution server tasks titled "p_server" should be listed. If not, a problem exists with one or more of these tasks. The product user lines are assigned to an instance of p_server as follows: 1 – 8 (X.25 dial–in) 9 – 16 (X.25 dedicated) 17 – 24 (X.25 dedicated) 25 – 32 (TCP dedicated) 33 – 40 (PPP dedicated and dial–in).

41 CHECK FOR FULL NARROWBAND OPERABILITY AT MSCF

Step	Operator Action	System Response/Comments
1	At the MSCF RPG HCI, click on the **Comms** block in the `USERS` container.	This will bring up the `Product Distribution Comms Status` (PDCS) window.
2	For all 24 lines, verify that the status does not indicate FAILED. For lines 9 through 24, verify that all normally–connected dedicated users show a status of `CONNECT`. See Table 6–1 to determine which dedicated lines should have an active user connected	If all lines are failed then all lines are non–operational. However, if all lines are not failed but none of the normally–connected dedicated users are actually connected, then all lines are probably non–operational or at least one communications server is non–operational (server "b" for dedicated lines 9 through 16 and/or server "c" for dedicated lines 17 through 24). However, perform the next step to also verify dial–in functionality.

Notes for Figure 6–2 (RPG Fault Isolation Flowchart)

Step	Operator Action	System Response/Comments
3	For the dial–in lines (1 through 8), test at least one dial line using one of the following methods: a. Use a handset to dial the phone number and verify that the dial–in modem answers the call (Note: Sprint VPN lines must be called from a Sprint VPN line). b. Get a normal dial–in user to dial–in and request a product through that dial line/modem. c. Contact the ROC Hotline and have them test the line using ether method a. or method b. If the dial line test fails, test at least one more dial line to see if it is an individual line problem or not.	See Table 6–1 to determine what dial–in phone numbers are available. On each of the lines tested, the modem should answer the in–coming call at a minimum, and distribute a product if requested from a normal dial–in user (e.g., a PUP). If called from a normal dial–in user, the PDCS window should show the `CONNECT` status; however, if just dialed from a normal phone, it will not.

(42) CHECK FOR TCP PRODUCT USER OPERABILITY AT MSCF

Step	Operator Action	System Response/Comments
1	At the MSCF RPG HCI, click on the **Comms** block in the `USERS` container.	This will bring up the `Product Distribution Comms Status` (PDCS) window.
2	For all lines 25 – 40, verify status does not indicate FAILED. For lines 25 – 37, verify that all normally connected dedicated users show a status of `CONNECT`. See Table 6–1 to determine which dedicated lines should have an active user connected.	If all lines are `FAILED` then all lines are non–operational. However, if all lines are not `FAILED` but none of the normally connected dedicated users are actually connected, then all lines are probably non–operational or at least one or more router modules/cards are non–operational. Router A2A1A2 serial module is for dedicated lines 33 – 36, 37 (NWS only), and 38 – 40. At NWS sites, router network module A2A1A1 FAST ETH 0 is for AWIPS LAN connection (line 25). Verify dial functionality in the next step.

Notes for Figure 6–2 (RPG Fault Isolation Flowchart)

Step	Operator Action	System Response/Comments
3	For the dial–in lines (38 – 40), test at least one dial line using one of the following methods: a. Use a handset to dial the phone number and verify that the dial–in modem answers the call. (Note: Sprint VPN lines must be called from a Sprint VPN line). b. Get a PPP dial–in user to make a one–time product request via dial–out to test the RPG dial line/modem. c. Contact the ROC Hotline and have them test a PPP line using either method a. or method b. If the dial line test fails, test at least one more dial line to see if it is an individual line problem or not.	See Table 6–1 to determine what dial–in phone numbers are available. On each of the lines tested, the modem should answer the in–coming call at a minimum, and distribute a product if requested from a PPP dial–in user (e.g., a TCP OPUP). If called from a PPP dial–in user, the PDCS window should show the `CONNECT` status; however, if just dialed from a normal phone, it will not.

Notes for Figure 6–2 (RPG Fault Isolation Flowchart)

(43) REBOOT RPG AND ALL COMM SERVERS FROM MSCF

Step	Operator Action	System Response/Comments
1	At the MSCF workstation, if an MSCF Display is not already open, enter **mscf &<CR>** at an MSCF terminal window.	If an MSCF Display is already open, continue with the next step.
2	On the MSCF Display, click the **Power Control** button. If this is an FAA Redundant system, first select the active channel before bringing up the Power Control window.	All reboots will be done using the power control functionality.
3	Click the RPG outlet to select it. Then click **Reboot** and **Yes** when prompted to continue.	For the RPG, the reboot functionality will first logically shut down the RPG. After the RPG is logically shut down (approximately 25 seconds), observe that the outlet will turn red for approximately five seconds and then revert back to green (power off/on reboot). For a Distant MSCF, the "red outlet" may not actually be seen due to the window refresh rate; however, appropriate messages should be observed in the displayed trap log. Wait for this to occur before proceeding.
4	Click the Comm Server A, B, and C outlets to select all three outlets. Then click **Reboot** and **Yes** when prompted to continue.	Note all three outlets turn red for approximately five seconds and then revert back to green (power off/on reboot). For a Distant MSCF, the "red outlet" may not actually be seen due to the window refresh rate; however, appropriate messages should be observed in the displayed trap log. It will take approximately two and one–half minutes for everything to reboot back to normal operation.

Notes for Figure 6–2 (RPG Fault Isolation Flowchart)

(44) REBOOT RPG AND RPG ROUTER FROM MSCF

Step	Operator Action	System Response/Comments
1	At the MSCF workstation, if an MSCF Display is not already open, enter **mscf &<CR>** at an MSCF terminal window.	If an MSCF Display is already open, continue with the next step.
2	On the MSCF Display, click the **Power Control** button. If this is an FAA Redundant system, first select the active channel before bringing up the Power Control window.	All reboots will be done using the power control functionality.
3	Click the RPG outlet to select it. Then click **Reboot** and **Yes** when prompted to continue.	For the RPG, the reboot functionality will first logically shut down the RPG. After the RPG is logically shut down (approximately 25 seconds), observe that the outlet will turn red for approximately five seconds and then revert back to green (power off/on reboot). For a Distant MSCF, the "red outlet" may not actually be seen due to the window refresh rate; however, appropriate messages should be observed in the displayed trap log. Wait for this to occur before proceeding.
4	Click the Router outlet to select it. Then click **Reboot** and **Yes** when prompted to continue.	The Router reboot functionality will cause the communications between the RPG and MSCF processors to be temporarily disconnected. After the RPG is rebooted and MSCF to RPG communications are re–established, (approximately 1 1/2 – 2 minutes for DoD/FAA configurations), observe that the outlet and alarm indications will revert back to green. Wait for this to occur before proceeding.

Notes for Figure 6–2 (RPG Fault Isolation Flowchart)

(45) REBOOT SPECIFIC COMM SERVER FROM MSCF AND TEST WITH PING

Step	Operator Action	System Response/Comments
1	At the MSCF workstation, if an MSCF Display is not already open, enter **mscf &<CR>** at an MSCF terminal window.	If an MSCF Display is already open, continue with the next step.
2	On the MSCF Display, click the **Power Control** button. If this is an FAA Redundant system, first select the active channel before bringing up the Power Control window.	All reboots will be done using the power control functionality.
3	Click the Comm Server A, B, or C outlet to select the outlet for the Comm Server that does not appear to be functioning correctly. Then click **Reboot** and **Yes** when prompted to continue.	Note the outlet turns red for approximately five seconds and then revert back to green (power off/on reboot). For a Distant MSCF, the "red outlet" may not actually be seen due to the window refresh rate; however, appropriate messages should be observed in the displayed trap log. It will take approximately one minute for the Comm Server to reboot.
4	After approximately one minute, test the box using a "ping" as follows for the "suspect Comm Server: **ping mps1a<CR>** (Single Channel or FAA Ch1) **ping mps1b<CR>** (Single Channel or FAA Ch1) **ping mps1c<CR>** (Single Channel or FAA Ch1) **ping mps2a<CR>** (FAA Channel 2 only) **ping mps2b<CR>** (FAA Channel 2 only) **ping mps2c<CR>** (FAA Channel 2 only)	If box rebooted successfully and the LAN connection is OK, box should respond with a: `.... is alive` message.

Notes for Figure 6–2 (RPG Fault Isolation Flowchart)

46 REBOOT RPG ROUTER FROM MSCF

Step	Operator Action	System Response/Comments
1	At the MSCF workstation, if an MSCF Display is not already open, enter **mscf &<CR>** at an MSCF terminal window.	If an MSCF Display is already open, continue with the next step.
2	On the MSCF Display, click the **Power Control** button. If this is an FAA Redundant system, first select the active channel before bringing up the Power Control window.	All reboots will be done using the power control functionality.
3	Click the RPG outlet to select it. Then click **Reboot** and **Yes** when prompted to continue.	The Router reboot functionality will cause the communications between the RPG and MSCF processors to be temporarily disconnected. After the RPG is rebooted and MSCF to RPG communications are re–established, (approximately 1 1/2 – 2 minutes for DoD/FAA configurations), observe that the outlet and alarm indications will revert back to green. Wait for this to occur before proceeding.

47 PING TCP PRODUCT DISTRIBUTION DEDICATED USERS (LINE 25 – 37)

Step	Operator Action	System Response/Comments
1	Obtain the IP–address corresponding to the problem use line(s). Refer to Table 6–2 for active user connections and their IP–address.	RPG runs a server application called cm_tcp for network connected product users. Each corresponding product user system runs the corresponding client version of cm_tcp. The user host IP–address should be the IP–address of the host, which runs the cm_tcp client application.
2	At the MSCF workstation, open a terminal window or select one that is already open on the desktop.	If an MSCF terminal window is already open and active (highlighted in pink), continue with the next step.

Notes for Figure 6–2 (RPG Fault Isolation Flowchart)

Step	Operator Action	System Response/Comments
3	In the terminal window at the MSCF workstation, enter: **telnet rpg<CR>** and login as a normal user. For an FAA Redundant system, if Channel 2 is the Active channel, enter: **telnet rpg2<CR>** to establish a telnet session to RPG 2 instead of RPG 1.	All users should have privileges to control the RPG software.
4	In the telnet session window with the rpg (or rpg2) and using the IP–address obtained in step 1, enter: **ping X.X.X.X<CR>** where X.X.X.X is the actual IP–address of the end user, (e.g., 10.5.4.3).	If network path to host is working, the user's host processor should respond with: `.... is alive` message.
5	An alternate ping test is to have the end user ping the RPG. In the terminal window, enter **cat /etc/hosts<CR>** on the command line. Using the mouse, scroll back in the window and note the IP–address of the processor (active channel processor if FAA redundant). For NWS systems only, enter **more /tftpboot/nws–specific<CR>** on the command line. Using the mouse, scroll back in the window to the beginning of the file and note the IP–address on the line that looks like: `!  AWIPS IP address is X.X.X.X` Call the end user (or advise them if they have called for assistance) and request the end user proceed to their host workstation or host processor, which runs the client version of cm_tcp to connect to the RPG. Proceed to step 6 if supporting an OPUP user connection problem. For NWS only, proceed to step 7 if supporting an AWIPS LAN connection on line 25.	The FAA redundant Channel 1 processor hostname is rpg1. The FAA redundant Channel 2 processor hostname is rpg2. For NWS and DoD, the processor hostname is rpg.

Notes for Figure 6−2 (RPG Fault Isolation Flowchart)

Step	Operator Action	System Response/Comments
6	Request the OPUP end user execute the following command in a terminal window at their host station: **ping *X.X.X.X*<CR>** (where X.X.X.X is the IP−address of rpg1, rpg2, or rpg)	For OPUP IP connections, the RPG router uses RIP version 2 as the routing protocol. The client version of cm_tcp will alternately try to establish connection to the rpg processor on channel 1 then channel 2. If unsuccessful, the cycle is repeated until a connection is made with one of the two processors. The rpg processor on the non−controlling channel will refuse cm−tcp connections. If network path to the RPG host is working, the user's host processor should respond with: `.... is alive` message.
7	Request the AWIPS end user execute the following command in a terminal window at their host station: **ping *X.X.X.X*<CR>** (where X.X.X.X is the AWIPS IP−address noted in step 5 above)	For NWS systems only, the primary AWIPS connection is on line 25. The RPG router uses NAT, which translates an outside AWIPS network IP−address to the RPG inside network IP−address that corresponds to the RPG processor (hostname rpg). So, the AWIPS end user will ping rpg processor using this pre−assigned AWIPS address. If network path to the RPG host is working, the user's host processor should respond with: `.... is alive`. message.

Notes for Figure 6–2 (RPG Fault Isolation Flowchart)

(48) REMOTE DIGITAL LOOPBACK PATTERN TEST (DEDICATED) (CODEX 3263)

Using an internally generated test pattern to provide data, the remote digital loopback pattern (RDL Pat) test examines the transmit and receive circuitry of the local and remote modem and the telephone line.

The pattern is transmitted by the "suspect" modem (first modem) to a second modem and then looped back to the "suspect" modem. Data bit and block errors are recorded during the test and are displayed on the front panel when the test is completed.

Step	Operator Action	System Response/Comments
1	Use the flip cable and connect the "suspect" modem to a second dedicated 14.4 Kbps modem in the modem rack.	Flip cable pinout is defined on Figure 6–2, Sheet 19.

NOTE

The position of the keys listed below are shown as they would appear when the modems are in the rack.

2 On the second modem, perform the following to set it up as a loopback test device:

a. **<DOWN>** until the display reads
`MODULATION OPT's`

b. **<ACROSS>** until the display reads
`Mode=Answer`

c. **<DOWN>** until the display reads
`Mode:Originate`

d. **<ENTER>**

e. **<ACROSS>** until the display reads
`Clock=Loopback`

f. **<DOWN>** until the display reads
`Clock:Internal`

Notes for Figure 6–2 (RPG Fault Isolation Flowchart)

Step	Operator Action	System Response/Comments
2 Cont.	g. **<ENTER>**	
	h. **<RETURN>** until the display reads `MODULATION OPT'S`	
	i. **<DOWN>** until the display reads `TELCO OPT's`	
	j. **<ACROSS>** until the display reads `LL TX Level=x (0 to -15 DB)`	
	k. **<DOWN>** until the display reads `LL TX Level:-15`	
	l. **<ENTER>**	
	m. **<RETURN>** until the display reads `Disconnect T/D? or Data 14.4 T/D?`	
3	On the "suspect" modem, perform the following to set it up as a loopback test device:	
	a. If this is a normal 14.4 modem, skip to step 3.f. If it is a 33.6 AWIPS modem (DoD or FAA only), continue with the next step.	
	b. **<ACROSS>** until the display reads `Select Options (:/=) x (x = 3 or 4)`	
	c. **<DOWN>** until the display reads `Select Options (:/=) 3`	
	d. **<ENTER>**	

Notes for Figure 6–2 (RPG Fault Isolation Flowchart)

Step	Operator Action	System Response/Comments
3 Cont.	e. **<RETURN>** until the display reads `Disconnect T/D? or Data 14.4 T/D?`	
	f. **<DOWN>** until the display reads `TELCO OPT's`	
	g. **<ACROSS>** until the display reads `LL TX Level=x (0 to -15 DB)`	
	h. **<DOWN>** until the display reads `LL TX Level:-15`	
	i. **<ENTER>**	
	j. **<RETURN>** until the display reads `Data 14.4 T/D?`	At this point the modems should be connected.
4	To start test, on the "suspect" modem press:	
	a. **<DOWN>** until the display reads `TEST OPT's`	
	b. **<ACROSS>** until the display reads `TEST = x` (don't care)	
	c. **<DOWN>** until the display reads `TEST (:/=) RDL Pat`	
	d. **<ENTER>** and wait until Alarm Light illuminates	
	e. **<RETURN>** until the display reads `Test 14.4 T/D?`	

Notes for Figure 6–2 (RPG Fault Isolation Flowchart)

Step	Operator Action	System Response/Comments
4. Cont.	f. Allow test to run for 2 minutes.	
5	To halt test, on the "suspect" modem press:	
	a. **<DOWN>** until the display reads `TEST OPT's`	
	b. **<ACROSS>** until the display reads TEST = x (don't care)	
	c. **<DOWN>** until the display reads `TEST (:/=) End Test`	
	d. **<ENTER>**	Bit = 0 Blk = 0 is displayed if test passes.
6	To restore to normal operation, reset both modems by pulling each out approximately one inch and then re-seating them. After they complete their Self Test, press:	
	<RETURN> until display reads `Disconnect T/D? or Data 14.4 T/D?`	

Notes for Figure 6–2 (RPG Fault Isolation Flowchart)

49 MODEM SELF–TEST (DIAL AND DEDICATED) (CODEX 3261, 3262, AND 3263)

Step	Operator Action	System Response/Comments
1	For UD71A5 Standalone Modem, Codex 3261, turn 0/1 Switch on rear panel to 0, then back to 1. For any rack–mounted Dedicated or Dial Modem, Codex 3262 or 3263, pull card out far enough (approximately 1 inch) to disconnect it from power, then push the card back.	
2	Observe the LED display on the Front Panel. • If test passes, `SELFTEST` followed by `3261 Ready`, `3262 Ready`, or `3263 Ready`, `3261 Fast Ready`, or `3263 Fast Ready` appears, depending on which modem is in test. • If test fails, `SELFTEST` appears, followed by an error message immediately after self–test.	

50 ENSURE CORRECT MODEM SETTINGS (DEDICATED)

Step	Operator Action	System Response/Comments
1	Identify the RPG/MSCF modems being used.	Refer to Table 6–1, Table 7–2, and Table 7–3 in this manual.
2	Verify the correct programming of the RPG/MSCF Dedicated Modem.	Refer to Dedicated Port (rack mounted) Modem setup procedures as follows: Lines 9 – 24 X.25 & 14.4Kbps – Para 6.6.14 X.25 & 33.6Kbps – Para 6.6.13 Lines 33 – 37 PPP & 14.4Kbps – Para 6.6.16 MSCF Modems UD70/170A14A21 RPG End – Para 6.6.17 UD71A5 MSCF End – Para 6.6.21

Notes for Figure 6–2 (RPG Fault Isolation Flowchart)

51 ENSURE CORRECT MODEM SETTINGS (DIAL)

Step	Operator Action	System Response/Comments
1	Identify the RPG modems being used.	Refer to Table 6–1, Table 7–2, and Table 7–3 in this manual.
2	Verify the correct programming of the RPG Dial Modem	Refer to Dial Port (rack mounted) Modem setup procedures, as follows: Lines 1 – 5 X.25 & 14.4Kbps – Para 6.6.11 Lines 38 – 40 PPP & 14.4Kbps – Para 6.6.12

52 SURGE SUPPRESSOR TEST (DEDICATED)

Step	Operator Action	System Response/Comments
1	At the Telco demarcation frame for the dedicated line under test or RPGOP Telco demarcation frame, locate the two surge suppressors for that line.	
2	Remove surge suppressor modules by gripping module on both ends and pulling directly away from demarcation frame.	
3	Test surge suppressor by measuring resistance between the following: Pin 1 and Pin 2 Pin 3 and Pin 4	See diagram below. Resistance should be approx. 5 ohms. Failure is indicated by high or infinite resistance measurements.

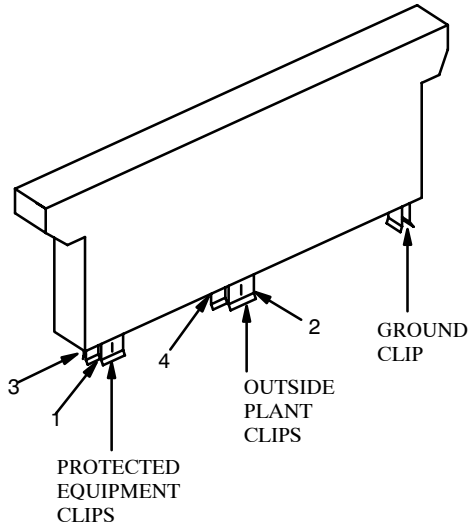

Notes for Figure 6–2 (RPG Fault Isolation Flowchart)

(53) REMOTE DIGITAL LOOPBACK PATTERN TEST (DIAL) (CODEX 3262)

Using an internally generated test pattern to provide data, the remote digital loopback pattern (RDL Pat) test examines the transmit and receive circuitry of the local and remote modem and the telephone line.

First, a second modem is used to dial into the "suspect" modem. Then, the pattern is transmitted by the "suspect" modem to a second modem and then looped back to the "suspect" modem. Data bit and block errors are recorded during the test and are displayed on the front panel when the test is completed.

Step	Operator Action	System Response/Comments

NOTE

The position of the keys listed below are shown as they would appear when the modems are in the rack.

1 On the front of the "suspect" modem, press:

a. **<RETURN>** until `Data 14.4 T/D or Disconnect T/D?` appears

b. **<DOWN>** until `TERMINAL OPT's` appears

c. **<ACROSS>** until `DTR=108.2` appears

d. **<DOWN>** until `DTR:High` appears

e. **<ENTER>**

f. **<RETURN>** until `Data 14.4 T/D` or `Disconnect T/D?` appears

Notes for Figure 6–2 (RPG Fault Isolation Flowchart)

Step	Operator Action	System Response/Comments
2	On a second dial modem, perform the following to set it up to dial the first modem:	The phone number of the "suspect" modem is entered on the second modem so that the second modem can call the "suspect" modem in the next step.
	a. **<RETURN>** until `Data 14.4 T/D?` or `Disconnect T/D?` appears	
	b. **<ACROSS>** until `Enter Phone #=1` appears	
	c. **<ENTER>**	(placeholder) appears
	d. **<DOWN>** until the first digit of the phone number is displayed.	
	e. **<ACROSS>** to display the next place holder	
	f. **<DOWN>** until the next digit of the phone number is displayed	
	g. Repeat steps e and f until the entire number is displayed.	
	h. **<ENTER>** when the phone number is complete	
	i. **<ACROSS>** until `View Phone #=1` appears	
	j. **<ENTER>**	Phone number will appear. Confirm this phone number is correct.

Notes for Figure 6–2 (RPG Fault Isolation Flowchart)

Step	Operator Action	System Response/Comments
2 Cont.	k. **<RETURN>** until `Data 14.4 T/D?` or `Disconnect T/D?` appears	
	l. **<DOWN>** until `MODULATION OPT's` appears	
	m. **<ACROSS>** until `Mode=Answer` appears	
	n. **<DOWN>** until `Mode:Originate` appears	
	o. **<ENTER>**	`Mode=Originate` will appear
	p. **<ACROSS>** until `Clock=Loopback` appears	
	q. **<DOWN>** until `Clock:Internal` appears	
	r. **<ENTER>**	`Clock=Internal` will appear
	s. **<RETURN>** until `MODULATION OPT's` appears	
	t. **<DOWN>** until `TERMINAL OPT's` appears	
	u. **<ACROSS>** until `DTR=108.2` appears	
	v. **<DOWN>** until `DTR:High` appears	

Notes for Figure 6–2 (RPG Fault Isolation Flowchart)

Step	Operator Action	System Response/Comments
2 Cont.	w. **<ENTER>**	`DTR= High` will appear
	x. **<RETURN>** until `TERMINAL OPT's` appears	
	y. **<DOWN>** until `ACU OPT's` appears	
	z. **<ACROSS>** until `Default Dial=Off` appears	
	aa. **<DOWN>** until `Default Dial:1` appears	
	ab. **<ENTER>**	`Default Dial=1` will appear.
	ac. **<RETURN>** until `DATA 14.4 T/D` or `Disconnect T/D` appears	
3	To dial the "suspect" modem from the second, on the second modem press:	
	a. **<ACROSS>** until `Dial From #=1` appears	
	b. **<ENTER>**	`Wait until Data 14.4 T/D?` appears.

Notes for Figure 6–2 (RPG Fault Isolation Flowchart)

Step	Operator Action	System Response/Comments
4	To put the "suspect" modem in loopback, from the front panel of the "suspect" modem, press:	
	a. **<DOWN>** until `TEST OPT's` appears	
	b. **<ACROSS>** until `TEST=End Test` appears	
	c. **<DOWN>** until `TEST:RDL Pat` appears	
	d. **<ENTER>**	`Test = RDL Pat` will appear. The ALM LED illuminates.
	e. Allow test to run approximately 2 minutes	
5	To stop the test, on the "suspect" modem, press the following keys:	
	a. **<RETURN>** twice	`Test 14.4 T/D?` is displayed
	b. **<DOWN>** until `TEST OPT's` appears	
	c. **<ACROSS>** until `TEST=RDL Pat` appears	
	d. **<DOWN>** until `TEST:End Test` appears	

Notes for Figure 6–2 (RPG Fault Isolation Flowchart)

Step	Operator Action	System Response/Comments
5 Cont.	e. **<ENTER>**	The test runs continuously until stopped. When stopped, the number of bit errors `Bit=X` and block errors `BLK=X` is displayed, where X is any digit. If the test runs for a short amount of time, they should both be equal to zero.
6	Pull out the first modem approximately 1 inch and then reseat. Repeat this for the second modem.	The modem self–test will run. All changes to the modem for this test are lost. The original configuration saved is in effect.

54 LOCAL ANALOG LOOPBACK PATTERN TEST (CODEX 3262 AND 3263)

Using an internal pattern generator to provide data, the local analog loopback pattern (LAL Pat) test examines the transmit and receive circuitry of the local modem. A pattern is internally generated and looped from the modem's transmitter to its receiver. Data bit and block errors are recorded and displayed on the front panel at the completion of the test.

Step	Operator Action	System Response/Comments
	NOTE The position of the keys listed below are shown as they would appear when the modems are in the rack. If this is the stand–alone UD71A5 MSCF modem, keys listed below will appear rotated an additional 90 degrees counter–clockwise.	
1	At the Modem under test, press:	
	a. **<RETURN>** until `Data 14.4 T/D?` or `Disconnect T/D?` or `Ranging T/D?`appears	If this is the MSCF modem, the display will either indicate `V34 33.6` or `Lineprobing`.
	b. **<DOWN>** until `TEST OPT's` appears	

Notes for Figure 6–2 (RPG Fault Isolation Flowchart)

Step	Operator Action	System Response/Comments
1 Cont.	c. **<ACROSS>** until `TEST=End Test` appears	
	d. **<DOWN>** until `TEST:LAL Pat` appears	
	e. **<ENTER>** until `TEST=LAL Pat` appears	The ALM LED on the modem front panel illuminates.
	f. Allow test to run for approximately 2 minutes	
2	At the front panel, press the following to stop the test:	
	a. **<DOWN>** until `TEST:End Test` appears	
	b. **<ENTER>**	The test runs continuously until stopped. When stopped, the number of bit errors `Bit = X` and Block errors `Blk = X` is displayed, where X is any digit. If the test runs for a short duration, they both should equal zero.
3	Press **<RETURN>** until `Data 14.4 T/D?` or `Disconnect T/D?` appears.	If this is the MSCF modem, the display will either indicate `V34 33.6` or `Lineprobing`.

Notes for Figure 6–2 (RPG Fault Isolation Flowchart)

(55) CHECK FOR DIAL TONE AND TEST DIAL LINE

At the RPG dial patch panel A23, observe the two rows of phone line jacks. Two vertical jacks with the switch in between are associated with each dial modem. They are arranged such that the first set of jacks on the left corresponds to the first dial modem (modem 1A), the next set is for dial modem 1B, and so forth. Make sure the switch is to the left. For the "suspect" modem, plug a normal phone or test headset into either the top or bottom jack and verify that a dial tone is available. Then, verify that the line is active by dialing another RPG modem or any outside line to see if it connects. If this is a Sprint VPN line, other Sprint lines can be dialed using the seven digit Sprint VPN number. If this is a Sprint Line, commercial phone numbers can be called using the full 10 digit number (with Area Code).

(56) TOGGLE OF CODEX MODEM (IF NECESSARY)

Step	Operator Action	System Response/Comments
1	Check if A/B LED on front of modem is illuminated.	
2	If A/B LED is illuminated, modem A is in use. If A/B LED is extinguished, modem B is in use.	
3	To toggle from modem A to modem B or vise versa, press **<RETURN>** and **<ENTER>** simultaneously.	

(57) PERFORM COMMUNICATION SERVER LOOPBACK TEST

Step	Operator Action	System Response/Comments
1	Shutdown the RPG applications software at the RPG workstation using the RPG HCI's `RPG Control` functionality, or by entering: **stop<CR>** at a terminal window user prompt.	Applications software stops. If an RPG HCI is open, the state changes to `SHUTDOWN`.

Notes for Figure 6–2 (RPG Fault Isolation Flowchart)

Step	Operator Action	System Response/Comments
2	At a terminal window user prompt, reboot the communications server that requires testing by entering the appropriate "commreset" command: SINGLE CHANNEL OR FAA CHANNEL 1: **commreset mps1a<CR>** (Lines 1 through 8) **commreset mps1b<CR>** (Lines 9 through 16) **commreset mps1c<CR>** (Lines 10 through 24) FAA CHANNEL 2: **commreset mps2a<CR>** (Lines 1 through 8) **commreset mps2b<CR>** (Lines 9 through 16) **commreset mps2c<CR>** (Lines 10 through 24)	Required to purge the box of previous applications control functions. The line numbers shown are the applications software line numbers. It takes approximately 45 seconds for the box to reload its protocol translation software. Do not proceed with step 4 until the box has fully rebooted. A "ping" can be used to verify that the box has fully rebooted (box will not respond to ping until that time).
3	Determine test requirements. If internal clocking will be used, connect the two–headed loopback cable (part number 2210042–206) either directly on two ports at the rear of the comm server being tested or at the end of the two DTE cables from the ports being tested (normally connected to a modem, except for Line 9 at NWS sites which would be connected to the 232/422 Converter A20). If external clocking will be used, use the three–headed loopback cable (part number 2200101–201) with the two female connectors being connected at the end of two DTE cables, and the male connector being connected to the "suspect" modem (or possibly the 232/422 converter for NWS sites).	The eight ports on each box are labeled 0 through 7. The two ports being tested must be in the same box. They must also be an even numbered port and the next odd numbered port. For example, if the "suspect" port is port 3, it must be looped to port 2 when the test is executed.

NOTE

If external clocking will be used and a dedicated modem is supplying the clock, see Note 6 on flowchart Figure 6–2, sheet 21. Clock instability can occur if the dedicated modem supplying the clock for the test is not physically connected to another modem.

4	At a terminal window normal user prompt, enter: **loopback<CR>** to start the loopback test user function.	This is an application designed to run the loopback tests based on minimal user input.

Notes for Figure 6–2 (RPG Fault Isolation Flowchart)

Step	Operator Action	System Response/Comments

NOTE

Steps 5 through 8 each address a system load query/prompt and are divided into two parts. The first part of the step provides the query/prompt information and default information (if any) in the RESPONSE/COMMENTS column. The second part of the step provides the specific action/procedure required.

5	`Choose which MPS800 to test:`
	
	`1 1A`
	`2 1B`
	`3 1C`
	`4 2A`
	`5 2B`
	`6 2C`
	
	`Enter Numeric Selection from Above, q to Quit or ? for Help: [?,??,q]:`
		Each box supports eight lines (1 through 8, 9 through 16, and 17 through 24).

	Enter numeral value of 1 through 6 and a <CR> depending on which box is being tested.	Line items 4 through 6 are only applicable to FAA Redundant Channel 2.

6	`Choose which MPS800 port pair to test:`
	
	`1 0&1`
	`2 2&3`
	`3 4&5`
	`4 6&7`
	
	`Enter Numeric Selection from Above, q to Quit or ? for Help: [?,??,q]:`
		The loopback test program is designed to loopback an even numbered port with the next odd numbered port.

	Enter numeral value of 1 through 4 and a <CR> depending on which ports are being tested.	If this is being done to initially fault isolate an individual bad narrowband link, then one of these two ports should be the “suspect” port.

Notes for Figure 6–2 (RPG Fault Isolation Flowchart)

Step	Operator Action	System Response/Comments

7	`Choose external or internal clocking:`
	
	`1 Internal (default 56000 baud)`
	
	`2 External (Need special Y cable)`
	
	`Enter Numeric Selection from Above, q to Quit or ? for Help: [?,??,q]:`
		Internal clocking should be used to verify that the box and cables are good. External clocking should be used to verify that the modem clocks are good.

	Enter **1<CR>** or **2<CR>** depending on which clocking will be used.	If external clocking is used, ensure that the three–headed loopback cable is used and that the male connector is connected to a modem (initially the "suspect" modem). Also, if this is a normal dedicated narrowband link (not the MSCF modem) and using external clocking, then also set the modems Modulation Clocking to `Internal` as opposed to the normal `Loopback` setting.

8	`Note: Cables should be installed on pairs` *n* `&` *n+1*`.`
	
	`Are you ready to test?`
	
	`Yes or No [y,n,?,q]`
	
	`Note: If test hangs for a long time do a CONTROL-C to exit.`
		The values of *n* & *n+1* will match what was selected from step 6.

Notes for Figure 6–2 (RPG Fault Isolation Flowchart)

Step	Operator Action	System Response/Comments

8 Cont.	Enter **y<CR>** to continue.	The system should respond with:
		`Testing...`
		`Link n open.`
		`Link n+1 open.`
		`Starting File Transfer.`
		`.....`
		`.....`
		
		If the test appears to hang, then the loopback is probably failing because no data is being transferred at all. If so, reverify the test setup and cables or rerun the test on different ports or a different box to verify good loopback test operability.

9	The loopback test will first transfer data from the even numbered port to the odd numbered port, then test again in the opposite direction. When each portion of the loopback test completes, a transfer statistics display will be shown for each of the two ports. Note the transmit and receive frame numbers from each port. Also, note whether any errors were received. If the test file transfers successfully, the following will also be noted:	The `Good Transmits` number on one port should equal the `Good Receives` number on the other and no errors should be noted even if the test file transfers successfully. If not, the loopback test has failed. If no errors are noted and the test file transferred successfully, these two ports are good.

Notes for Figure 6–2 (RPG Fault Isolation Flowchart)

Step	Operator Action	System Response/Comments

9 Cont.	`File Transfer Complete.`
	`SUCCESS: transferred test data successfully between ports n and n+1.`
	AND
	`File Transfer Complete.`
	`SUCCESS: transferred test data successfully between ports n+1 and n.`
	
	`**********Test Summary on` *box_name* `**********`
	`SUCCESS: transferred test data successfully between ports n and n+1.`
	`SUCCESS: transferred test data successfully between ports n+1 and n.`
	`Finished testing. Statistics are saved in the /tmp/looplog.`*PID* `file.`
	`**********`
	Where *box_name* would indicate which Comm Server is being tested and the *PID* in the `/tmp/looplog.`*PID* is the system–assigned Process ID. Since the summary file is placed in the /tmp directory, the file availability is only temporary until the next Sun processor–level reboot.	

NOTE

If the loopback test will not run at all, verify the test setup. If the test setup appears OK, attempt loopback tests on a different communications server that appears to be working OK to verify that a loopback test will work correctly from two of its ports. This is also important when using external clocking from a “suspect” device (modem or 232/422 converter). If that test fails, repeat that test once or twice more using a different modem to supply the external clocks; thus, verifying the first device (modem or 232/422 converter) is really defective.

10	If no other loopback tests are needed, reboot the Comm Server tested by repeating the applicable step “commreset” command. Then, restart the RPG applications software by using the RPG HCI’s RPG Control functionality (Restart All Tasks), or by entering: **start<CR>** at a terminal window user prompt.	Applications software was stopped in step 1.

Notes for Figure 6–2 (RPG Fault Isolation Flowchart)

(58) PERFORM ROUTER SERIAL PORT LOOPBACK TEST

This procedure must be run from an RPG workstation. This procedure will show if the two ports under test are working. The graphic below is a rear view of the RPG Router Serial Module (UD70/170A2A1A2). This module is located in the upper right rear slot (2) of the router. The Cisco convention is to designate each port by the router slot location combined with the port number (e.g., 2/0, 2/1). These designator conventions are show below:

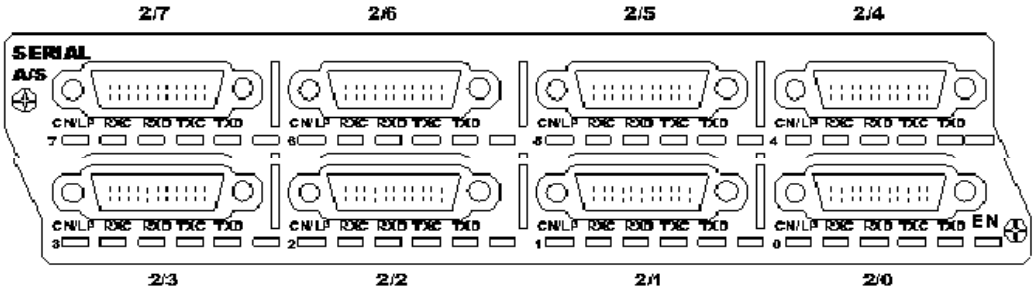

Step	Operator Action	System Response/Comments
1	At the RPGPCA (controlling channel for FAA redundant), log on the workstation and open a terminal window.	

NOTE

Steps 2 through 6 disconnect lines 33 through 40.

2	Use the existing instance of the RPG HCI or start the RPG HCI by entering: **hci &<CR>** in a terminal window. Move the mouse to the RPG HCI window and click once anywhere within the window to make it the active window.	The window now has a pink border highlighting it as the active window.
3	Click on the **Comms** button (blue) to display the Product Distribution Communications Status (PDCS) window.	After several seconds, the PDCS window appears.
4	Click on the **Next** button to display status of lines 25 through 40.	The second page of the PDCS line appears.
5	Using the mouse, highlight line 33. Press and hold the **<Shift>** key on the keyboard, and then click on line 40.	Lines 33 through 40 are highlighted in black.

Notes for Figure 6–2 (RPG Fault Isolation Flowchart)

Step	Operator Action	System Response/Comments
6	Click on the **Disconnect** button to disconnect lines 33 through 40.	The status of each line will change to a status of: `DISCON` This sends the SNMP control command to the router to shutdown the serial interfaces 2/0 (NWS only) and 2/1 through 2/7 (DoD/FAA and NWS configurations).

NOTE

Steps 7 through 13 will start two different telnet sessions with the router to be opened at the same time. Any inactivity in either session for approximately 10 minutes will cause the telnet session to time out. If a time–out occurs, repeat steps 7 through 14 to reactivate the first session or steps 7 through 12 and 15 to reactivate the second session. To avoid a time–out, periodically press the **<CR>** key in the telnet session.

7	Open two different terminal windows on the RPG workstation, and place both windows side–by–side in front of all other open windows on the desktop.	
8	Perform steps 9 through 12 in each terminal window.	Two router telnet sessions will be opened and used during the loopback procedure. One telnet session will display router debug information. The second telnet session will be used to turn the serial ports on and off.

Notes for Figure 6–2 (RPG Fault Isolation Flowchart)

Step	Operator Action	System Response/Comments

9	If this is a single channel RPG or FAA redundant channel 1, at the prompt, enter:
	telnet rtr<CR>
	or
	telnet rtr1<CR>
		The response will be, where XXX corresponds to the specific RPG IP subnet (FAA Channel 2: the IP–address will be 172.25.XXX.77)
		`Trying 172.25.XXX.7...`
		`Connected to rtr.`
		`Escape character is '^]'.`
		`WARNING! US Gov system! PL 99-474 prohibits unauthorized access. Violators may be fined or imprisoned. Persons using this system are subject to and consent to having all activities monitored/recorded.`
		`User Access Verification`
		`Password:`

10	Type in the site selected user level password (default is cisco): **cisco<CR>**	User mode or user level in the router is indicated by the > prompt. `rtr>` or `rtr2>` prompt is displayed.
11	At the `rtr>` or `rtr2>` prompt, enter: **enable<CR>**	This command enters the router into the privilege mode. The router prompt will be `Password:`
12	Type in the site selected privileged password (default is cisco): **cisco<CR>**	Privilege mode is indicated by a # prompt.
13	In the first telnet session, enter: **term mon<CR>**	This turns on the Terminal Monitor Mode. The `rtr#` or `rtr2#` prompt is displayed.

Notes for Figure 6–2 (RPG Fault Isolation Flowchart)

Step	Operator Action	System Response/Comments

NOTE

Router state changes (such as those shown in the example below) will be printed to the screen of the first telnet session window during the remainder of the procedures. New commands can still be entered. Enter a **<CR>** to return to the # prompt and type in the new command followed by **<CR>**. The command might be spaced between lines as the state changes scroll by.

Example router state changes:

```
01:37:24: %LINK-3-UPDOWN: Interface Serial2/5, changed state to up
01:39:26: %LINK-5-CHANGED: Interface Serial2/5, changed state to
reset
```

14	In the first telnet session window, enter: **debug ppp neg<CR>**	Turns on ppp negotiation debugging. PPP debug output will begin to display in approximately 20 seconds. The initial response is: `PPP protocol negotiation debugging is on`

15	In the second telnet session, enter:
	config t<CR>
		This opens the router global configuration mode.
		The initial response is:
		`Enter configuration commands, one per line. End with <Ctrl>Z.`
		The prompt will then change to:
		`rtr(config)#` or
		`rtr2(config)#`
		for FAA Channel 2

16	Look at the serial module (UD70/170A2A1A2) lights for ports 0 thru 7. The mapping for each port is following:	For DoD/FAA only, the Distant MSCF is port 2/0. This port is configured differently from the other serial dedicated ports, so the loopback procedure will not work for this port.

Notes for Figure 6–2 (RPG Fault Isolation Flowchart)

Step	Operator Action	System Response/Comments
16 Cont.	**Dedicated**	

Line	Port	Modem	RPG Type
33	2/1	17	All
34	2/2	18	All
35	2/3	19	All
36	2/4	20	All
37	2/0	21	NWS only

Dial–In

Line	Port	Modem	RPG Type
38	2/5	3B	All
39	2/6	4A	All
40	2/7	4B	All

17	Disconnect the modem ends of Cisco RS–232 DTE cables – one for the suspect port and another port of the same type (dial/dedicated). Connect the full–handshake null modem adapter (SERD 106, NSN 5935–01–503–2892, Blackbox 522303 or equivalent) between the DB25 ends of two Cisco RS–232 DTE cables.	Ports configured for dial should be looped only to other dial ports (2/5 thru 2/7). Ports configured for dedicated should be looped only to other dedicated ports. (All Sites: 2/1 thru 2/4 plus NWS only: 2/0).

NOTE

Steps 18 through 20 configures two serial ports under test for "No Shutdown."

18	In the second telnet session, enter: **int s2/*X*<CR>** Where *X* should be replaced with the actual number corresponding to the port under test.	This opens the serial interface configuration mode. The prompt will change to: `rtr(config-if)#` or `rtr2(config-if)#` for FAA Channel 2.
19	In the second telnet session, enter: **no shutdown<CR>**	In the first telnet session where the terminal monitor command is active, the response will be: `00:38:37: %LINK-3-UPDOWN: Interface Serial2/X, changed state to down 00:38:37:Se2/X LCP: State is Closed`

Notes for Figure 6–2 (RPG Fault Isolation Flowchart)

Step	Operator Action	System Response/Comments
20	Repeat the previous two steps for the other port selected for loopback. If this is a dedicated loopback, proceed to step 24.	
21	For dial loopback, observe the debug output in the first telnet session. An extract of the correct sequence is provided below. Scroll through the debug output in the telnet window, as necessary, to ensure that the "CHAP" phase of negotiation is achieved. There will be at least one "CHAP: O CHALLENGE" and one "CHAP: I CHALLENGE" packet for each port under test. The CHAP sequence may not be in exact consecutive order.	

Example PPP Negotiation Debug Output for Two Good Dial Serial Ports:

```
TIME PORT NEGOTIATION PHASE
00:40:01: Se2/6 CHAP: O CHALLENGE id 1 len 25 from "rtr"
00:40:01: Se2/6 CHAP: I CHALLENGE id 1 len 25 from "rtr"
00:40:01: Se2/6 CHAP: Waiting for peer to authenticate first
00:40:01: Se2/7 CHAP: I CHALLENGE id 1 len 25 from "rtr"
00:40:01: Se2/7 CHAP: Waiting for peer to authenticate first
00:41:01: Se2/7 CHAP: O CHALLENGE id 2 len 25 from "rtr"
```

NOTES

An I and O CHALLENGE packet in the CHAP state must be observed from both serial ports for the loopback to be considered successful. It may be necessary to wait about 2 minutes to see the CHAP protocol negotiation output sequence. During loopback, the negotiation will eventually time out and repeat the negotiation process from the beginning after the ports are reset.

FAA Only: "rtr" will instead be "rtr1" for the channel 1 router or "rtr2" for the channel 2 router.

Reminder that any inactivity for approximately 10 minutes will cause the telnet session to time–out. See NOTE before step 7.

22	If the dial debug observed is correct, proceed to step 27. If no debug is observed within a 30 second interval or there are only I or only O packets observed in the CHAP state for each interface, check the connections of each cable end. Observe the debug output again.	

Notes for Figure 6–2 (RPG Fault Isolation Flowchart)

Step	Operator Action	System Response/Comments
23	If the debug output is now as shown in the good dial example of step 21, proceed to step 27. If the debug output is not like the good example or there is no debug after 30 seconds, the serial module of the router is probably defective. Obtain a replacement router (or serial card if it is the LRU).	
24	For dedicated loopback, observe the debug output in the first telnet session. An extract of the correct sequence is provided below. Scroll through the debug output in the telnet window, as necessary, to ensure the IPCP phase of negotiation is achieved. There will be at least one debug line like IPCP: Install route... for both serial ports.	

Example PPP Negotiation Debug Output for Two Good Dedicated Serial Ports:

```
TIME PORT NEGOTIATION PHASE
01:11:55: Se2/4 IPCP: Install route to 172.25.XXX.7
01:11:55: Se2/2 IPCP: Install route to 172.25.XXX.7
```

FAA RPG CHANNEL 2:

```
TIME PORT NEGOTIATION PHASE
01:11:55: Se2/4 IPCP: Install route to 172.25.XXX.77
01:11:55: Se2/2 IPCP: Install route to 172.25.XXX.77
```

The output must include installed routes to 172.25.XXX.7 (172.25.XXX.77 for FAA CH 2) through both serial ports under test. It may be necessary to wait about 2 minutes to see this output. During loopback, the negotiation will eventually time out and repeat the negotiation process from the beginning after the ports are reset. The *XXX* will be the actual IP subnet for the specific RPG under test.

25	If the debug observed is correct, proceed to step 27. If no debug is observed within a 30 second interval or there are only I or only O packets observed on one or both of the interfaces, check the connections of each cable end. Observe the debug output again.	
26	If the debug output is now as shown in the good dedicated example of step 24, proceed to the next step. If the debug output is not like the good example or there is no debug after 30 seconds, the serial module of the router is probably defective. Obtain a replacement router (or serial card if it is the LRU).	
27	Remove the cable adapter, and reconnect the two RS–232 DTE cables to their original modems.	

Notes for Figure 6–2 (RPG Fault Isolation Flowchart)

Step	Operator Action	System Response/Comments
	NOTE Steps 28 through 30 configures two serial ports under test for "Shutdown".	
28	In the second telnet session, enter: **int s2/*X*<CR>** Where *X* should be replaced with the actual number corresponding to the port under test.	This opens the serial interface configuration mode. The prompt will change to: `rtr(config-if)#` or `rtr2(config-if)#` for FAA Channel 2.

29	In the second telnet session, enter:
	shutdown<CR>
		In the first telnet session where the terminal monitor command is active, the response will be:
		`00:38:37: %LINK-3-UPDOWN: Interface Serial2/X, changed state to down`
		`00:38:37:Se2/X LCP: State is Closed`

30	Repeat the previous two steps for the other port selected for loopback.	
31	In the first telnet session window, enter: **no debug all<CR>**	Turns off the debugging routine. Response is: `All possible debugging has been turned off.`
32	In the first telnet session window, enter: **term no mon<CR>**	Turns off the terminal monitor mode.
33	In the second telnet session window, enter: **end<CR>**	The `rtr#` or `rtr2#` prompt will appear.
34	In both telnet windows, enter: **exit<CR>** to exit out of both telnet sessions.	Response is both windows is: `Connection closed by foreign host`
35	In both telnet windows, enter: **<CR>**	The RPGPCA terminal window prompt will appear.
36	Move the mouse to the RPG HCI PDCS window to make it the active window.	

Notes for Figure 6–2 (RPG Fault Isolation Flowchart)

Step	Operator Action	System Response/Comments
37	Use the mouse to highlight line 33. This line is now highlighted in black. Press the **<Shift>** key on the keyboard. Then, while still pressing the **<Shift>** key **click on line 40**.	
38	Click on the **Connect** button to connect lines 33 through 40.	The status of each line will change to CONNECT or CON PEND depending upon if a distant user is connected to the system. This step returns all router serial module ports to the no shutdown state.

(59) MSCF SURGE SUPPRESSOR TEST

Step	Operator Action	System Response/Comments
1	On the MSCF table, unplug surge suppressor UD71E1 from its base.	
2	Test surge suppressor by measuring resistance across each of the four circuits. Circuits are paired in order top to bottom, disregarding the very top and the very bottom contacts (one offset keyed).	Resistance should be approx. 5 ohms. Failure is indicated by high or infinite resistance measurements.

(60) REDUNDANT STATUS MENU CHECK/CHANNEL SWITCH

Step	Operator Action	System Response/Comments
1	Check the Redundant Status at both RPG HCIs by clicking the RDA **Control** block and viewing the `Redundant Control, Local Channel Status:`	If the `Local Channel Status:` is `Controlling`, then this channel is in control.

NOTE

UD5 and UD105 must be in Remote or Either (L/R) Control before attempting this procedure.

Notes for Figure 6–2 (RPG Fault Isolation Flowchart)

Step	Operator Action	System Response/Comments
2	If Channel 2 is controlling and to make Channel 1 the Controlling Channel: At the Channel 2 RDA Control window, unlock the screen using the lock/password function and then click `Redundant Control` **Non–controlling**.	After a brief period, `Local Channel Status:` will change to `Non–controlling` and `Red Channel Status:` will change to `Controlling`.
3	If Channel 1 is controlling and to make Channel 2 the Controlling Channel: At the Channel 2 RDA Control window, unlock the screen using the lock/password function and then click `Redundant Control` **Controlling**.	After a brief period, `Local Channel Status:` will change to `Controlling` and `Red Channel Status:` will change to `Non–controlling`.

(61) RELAY BOX POWER SUPPLY VOLTAGE MEASUREMENT

Using voltmeter, measure voltage between V+(red lead of meter) and V–(black lead of meter) on 70/170PS1. The meter should read +28.0 volts +/−5%. If reading is not within tolerance, turn power supply UD70/170PS1 output voltage adjustment potentiometer until the voltage reads +28.0V +/– 5%. If the power supply cannot be adjusted to within the limit, replace power supply.

(62) SHUTDOWN RPG SOFTWARE AND PERFORM DIO LOOPBACK TEST ON BOTH CHANNELS

Step	Operator Action	System Response/Comments
1	At a Channel 1 RPG terminal window normal user prompt, enter: **stop<CR>**	This is an alias which stops the RPG software. Wait approximately 15 seconds for the software to stop and a user prompt to return.
2	At the rear of the Channel 1 RPG processor assembly (UD170A7), disconnect cable 170W302 from the DIO card (far right PCI slot) and connect the DIO loopback connector, part number 2320057–301.	
3	At the terminal window prompt, enter: **diotest<CR>**	Opens the “diotest” program. If message `**Error**: Cannot open DIO device!` is received, then the card can not be accessed and is defective. Proceed to step 6 to restart the RPG software and check the other channel.

Notes for Figure 6–2 (RPG Fault Isolation Flowchart)

Step	Operator Action	System Response/Comments
4	At the prompt `Command (r)ead, (w)rite, (s)witch, (l)oopback, e(x)it :`, enter: **l<CR>**	Starts the loopback test.
5	At the prompt `Do you have a male DB37 connector installed with pins 1 <-> 11 and 9 <-> 28 looped and ready? (y)es or (n)o?`, enter: **y<CR>**	Performs the DIO loopback test. Card should respond with a message such as: `**LOOPBACK SUCCESSFUL**` If a `**LOOPBACK FAILED**` message is received, the loopback test did not pass.
6	At the terminal window prompt, enter: **start<CR>**	This is an alias which starts the RPG software.
7	At a Channel 2 RPG terminal window normal user prompt, enter: **stop<CR>**	This is an alias which stops the RPG software. Wait approximately 15 seconds for the software to stop and a user prompt to return.
8	At the rear of the Channel 2 RPG processor assembly (70A7), disconnect cable 70W302 from the DIO card (far right PCI slot) and connect the DIO loopback connector, part number 2320057–301.	
9	At the terminal window prompt, enter: **diotest<CR>**	Opens the “diotest” program. If message `**Error**: Cannot open DIO device!` is received, then the card can not be accessed and is defective. Proceed to step 12 to restart the RPG software.
10	At the prompt `Command (r)ead, (w)rite, (s)witch, (l)oopback, e(x)it :`, enter: **l<CR>**	Starts the loopback test.

Notes for Figure 6–2 (RPG Fault Isolation Flowchart)

Step	Operator Action	System Response/Comments
11	At the prompt `Do you have a male DB37 connector installed with pins 1 <-> 11 and 9 <-> 28 looped and ready? (y)es or (n)o?`, enter: **y<CR>**	Performs the DIO loopback test. Card should respond with a message such as: `**LOOPBACK SUCCESSFUL**` If a `**LOOPBACK FAILED**` message is received, the loopback test did not pass.
12	At the terminal window prompt, enter: **start<CR>**	This is an alias which starts the RPG software.

63 RPG RELAY BOX CONNECTIONS

Use the following reference list when removing narrowband cables at the relay box UD31.

RPG to RELAY BOX CABLE (RELAY BOX JACK)	RELAY BOX to DEMARC CABLE (RELAY BOX JACK)	DESCRIPTION
W169 (J8)	W44 (J14)	CHANNEL 1 LEASED LINES 1–12
W171 (J10)	W46 (J16)	CHANNEL 1 LEASED LINES 13, 14, AND MSCF
W170 (J9)	W45 (J15)	CHANNEL 1 DIAL LINES 1–10
W162 (J3)	W44 (J14)	CHANNEL 2 LEASED LINES 1–12
W164 (J5)	W46 (J16)	CHANNEL 2 LEASED LINES 13, 14, AND MSCF
W163 (J4)	W45 (J15)	CHANNEL 2 DIAL LINES 1–10
W141 (J22)	W143 (J25)	DISTANT MSCF CHANNEL 2
W151 (J24)	W143 (J25)	DISTANT MSCF CHANNEL 1

Notes for Figure 6–2 (RPG Fault Isolation Flowchart)

(64) CSU FAR LOOPBACK TEST

Place the Test Switch in the FAR position. The SET LED should blink for five seconds, the ERR light should blink once quickly, and the SET LED continues to blink. If this is the case, the loopback test has passed. If the ERR LED lights solid after five seconds, then the loopback test failed.

(65) CHECK AWIPS CONNECTIVITY ASSOCIATED WITH DoD AND FAA RADARS (WITH FRAME RELAY)

Step	Operator Action	System Response/Comments
1	At the distant MSCF, on the `Master System Control Function` Window, click on `Comms Status`	At the distant MSCF, verify the RPG is operating, but there is no AWIPS connectivity (or partial connectivity). The `Comms Status` window should appear with Cisco switch links (24 total). If not, the RPG is not functional. Otherwise proceed to step 2.
2	Ask the AWIPS System Administrator to ping the IP–address of the DoD RPG or FAA RPG (Channels 1 and 2)	If AWIPS can ping the RPG (both for FAA radars), but you can't get a connection on the port, an AWIPS configuration problem may exist. Call NCF to verify AWIPS configuration settings for the DoD and FAA radars.

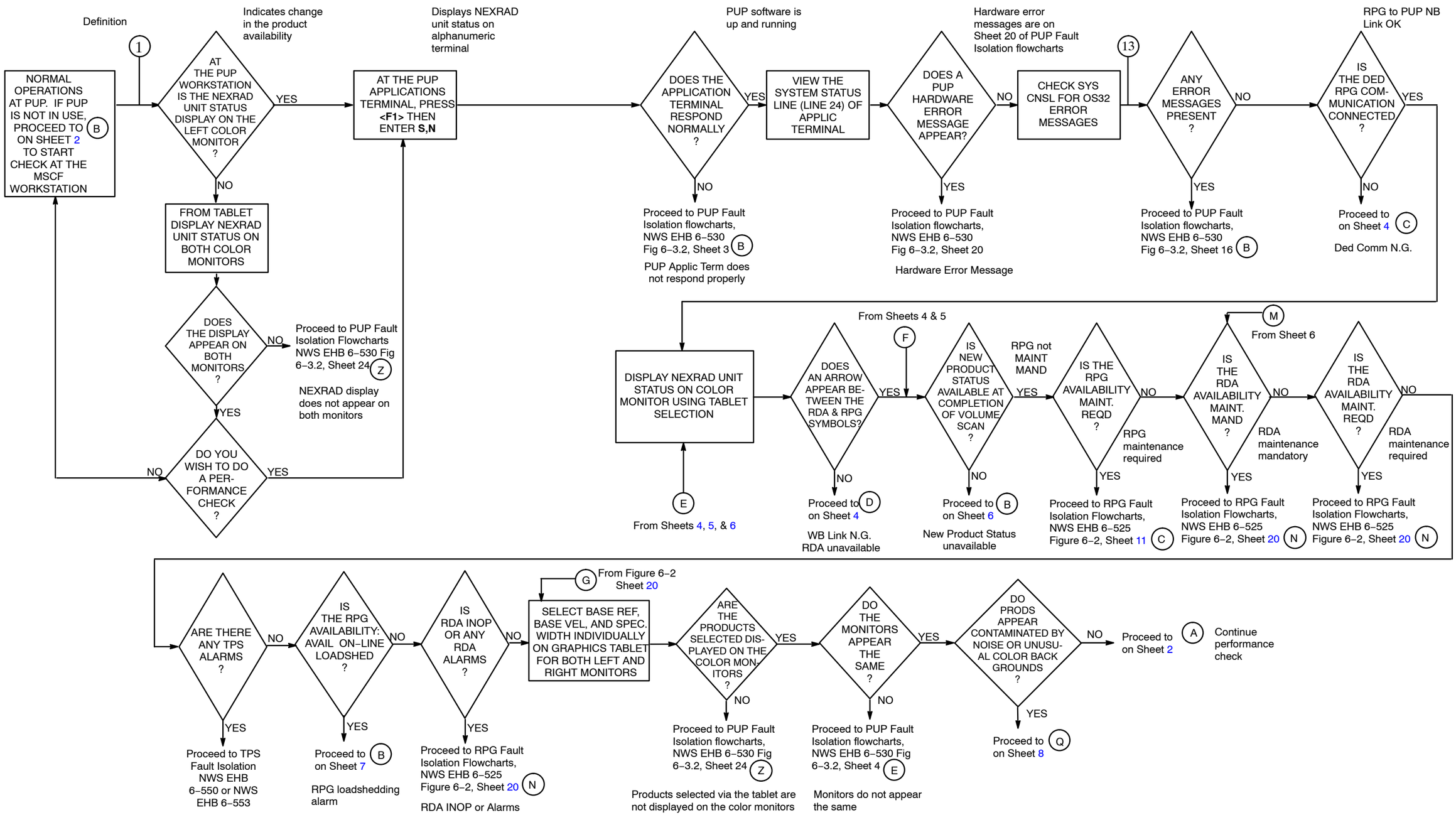

Figure 6–1 System Fault Isolation Flowchart (Operability Check) (Sheet 1 of 8)

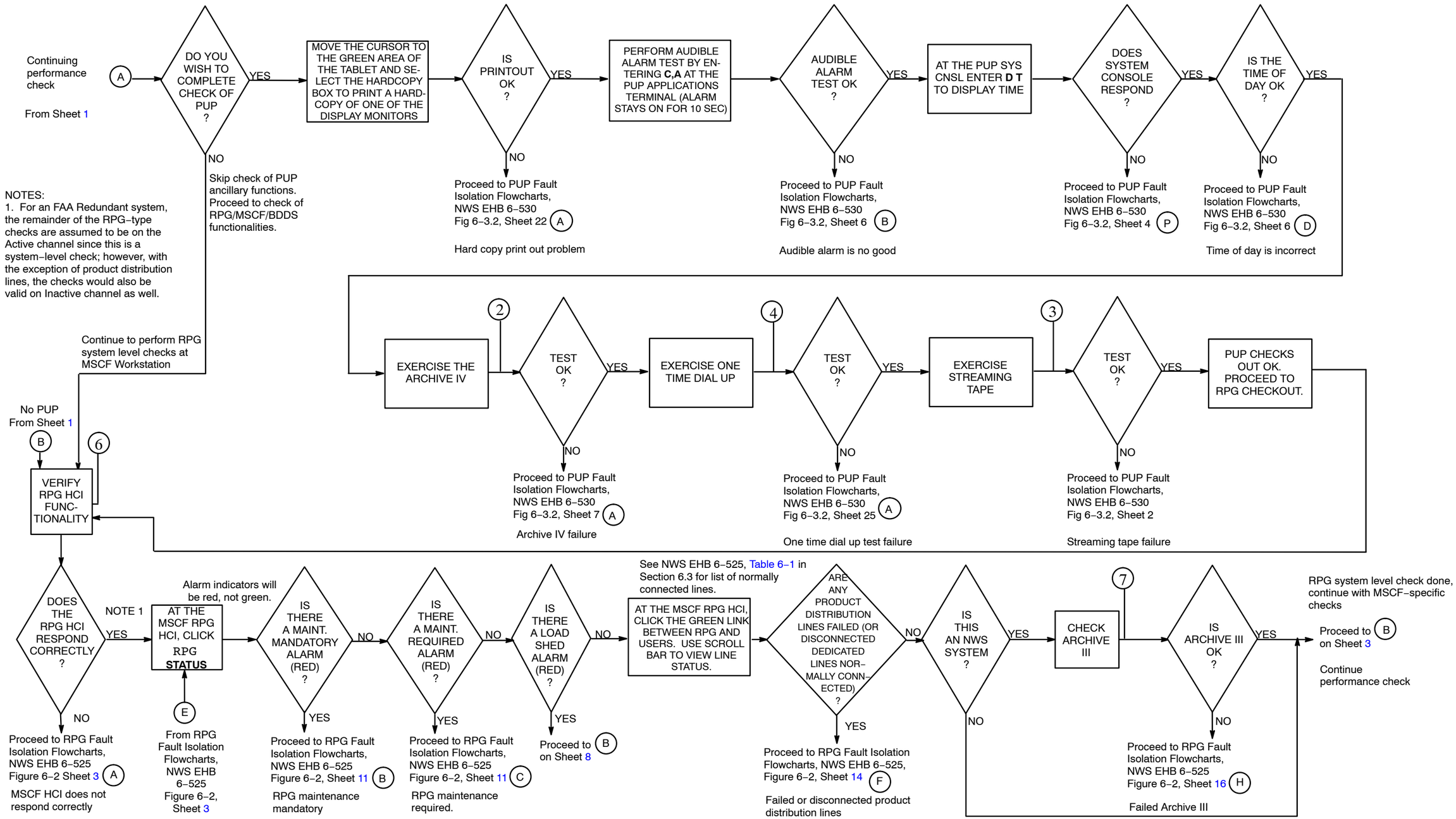

Figure 6–1. System Fault Isolation Flowchart (Operability Check) (Sheet 2 of 8)

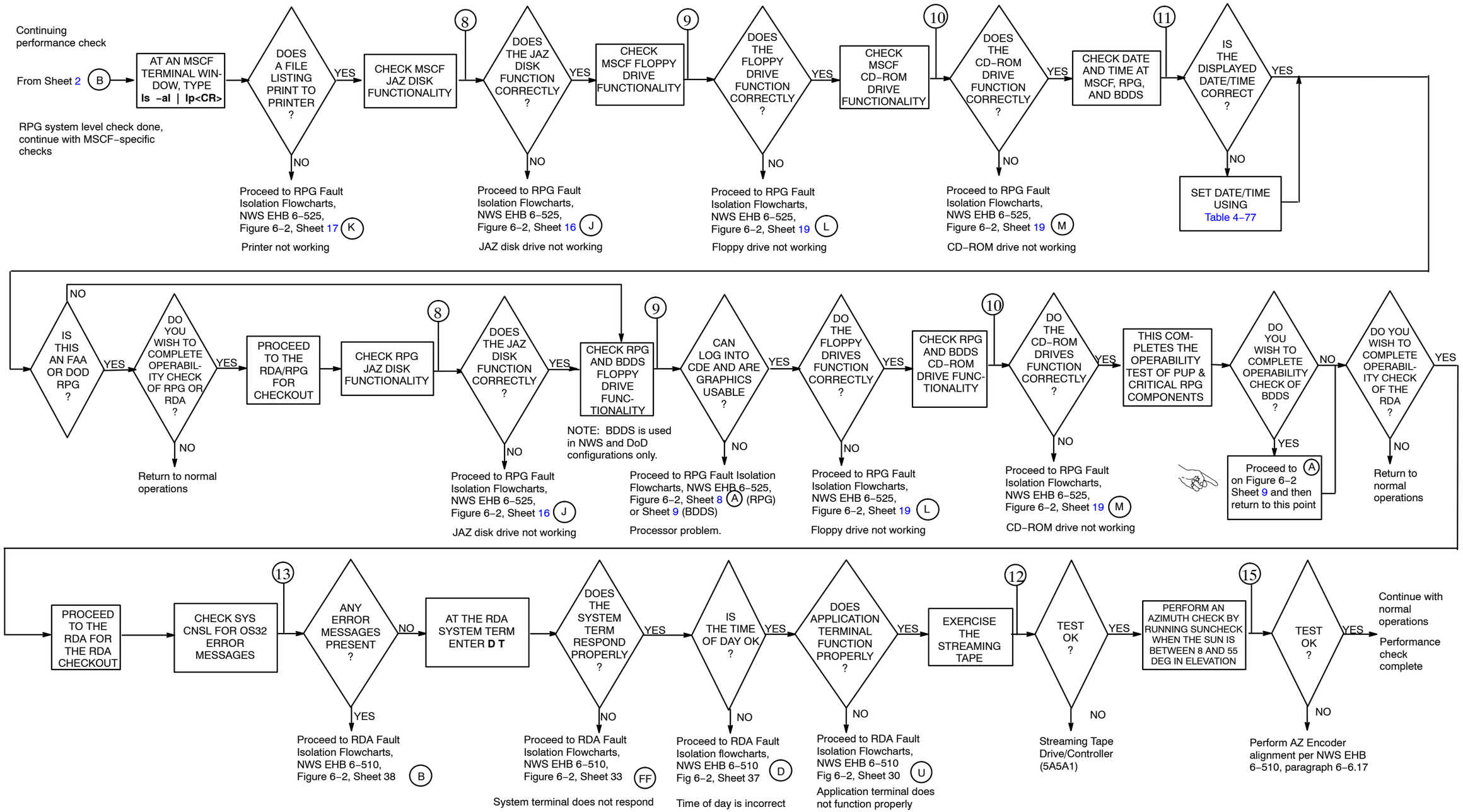

Figure 6–1. System Fault Isolation Flowchart (Operability Check) (Sheet 3 of 8)

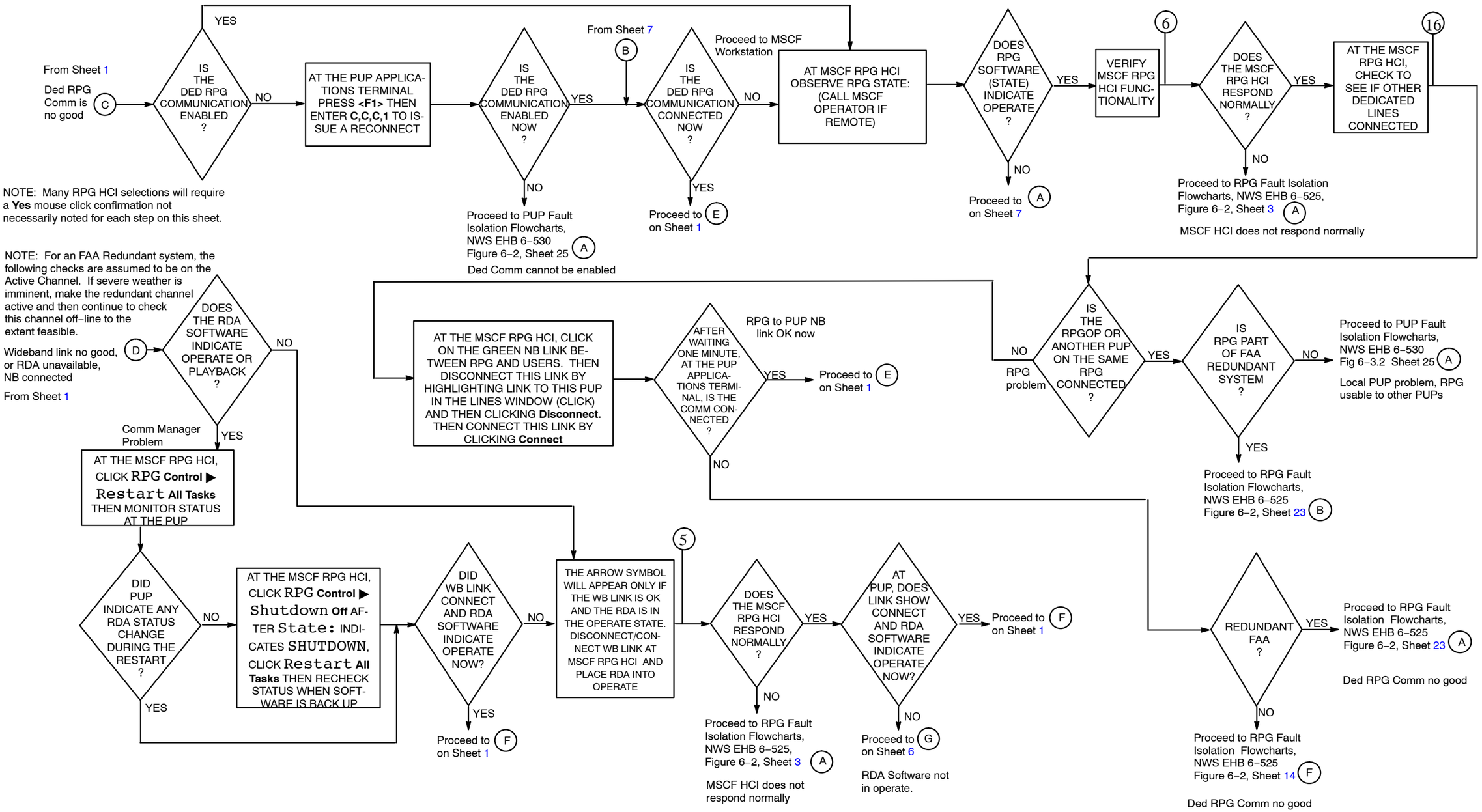

Figure 6–1. System Fault Isolation Flowchart (Communications) (Sheet 4 of 8)

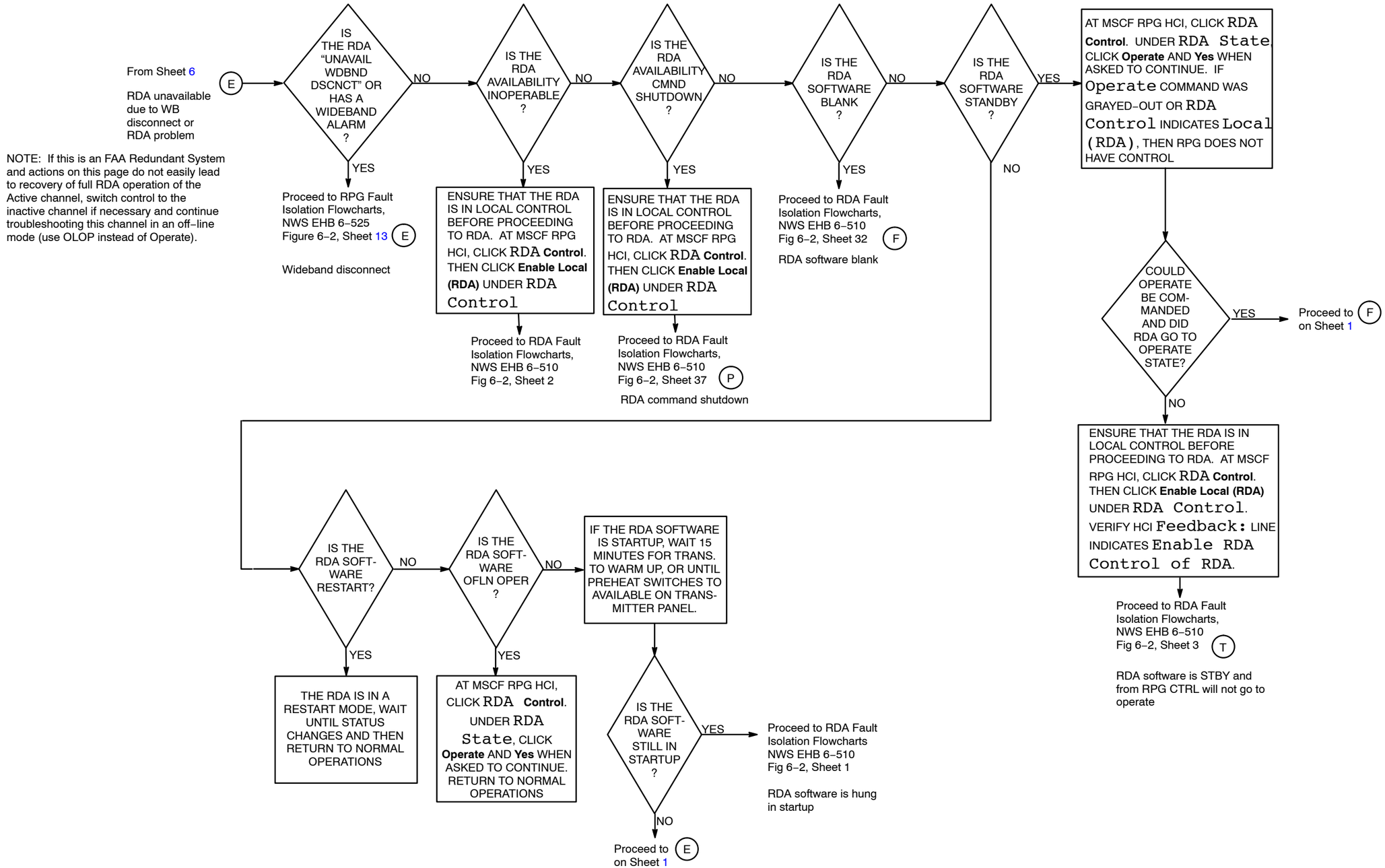

Figure 6–1. System Fault Isolation Flowchart (Status RDA) (Sheet 5 of 8)

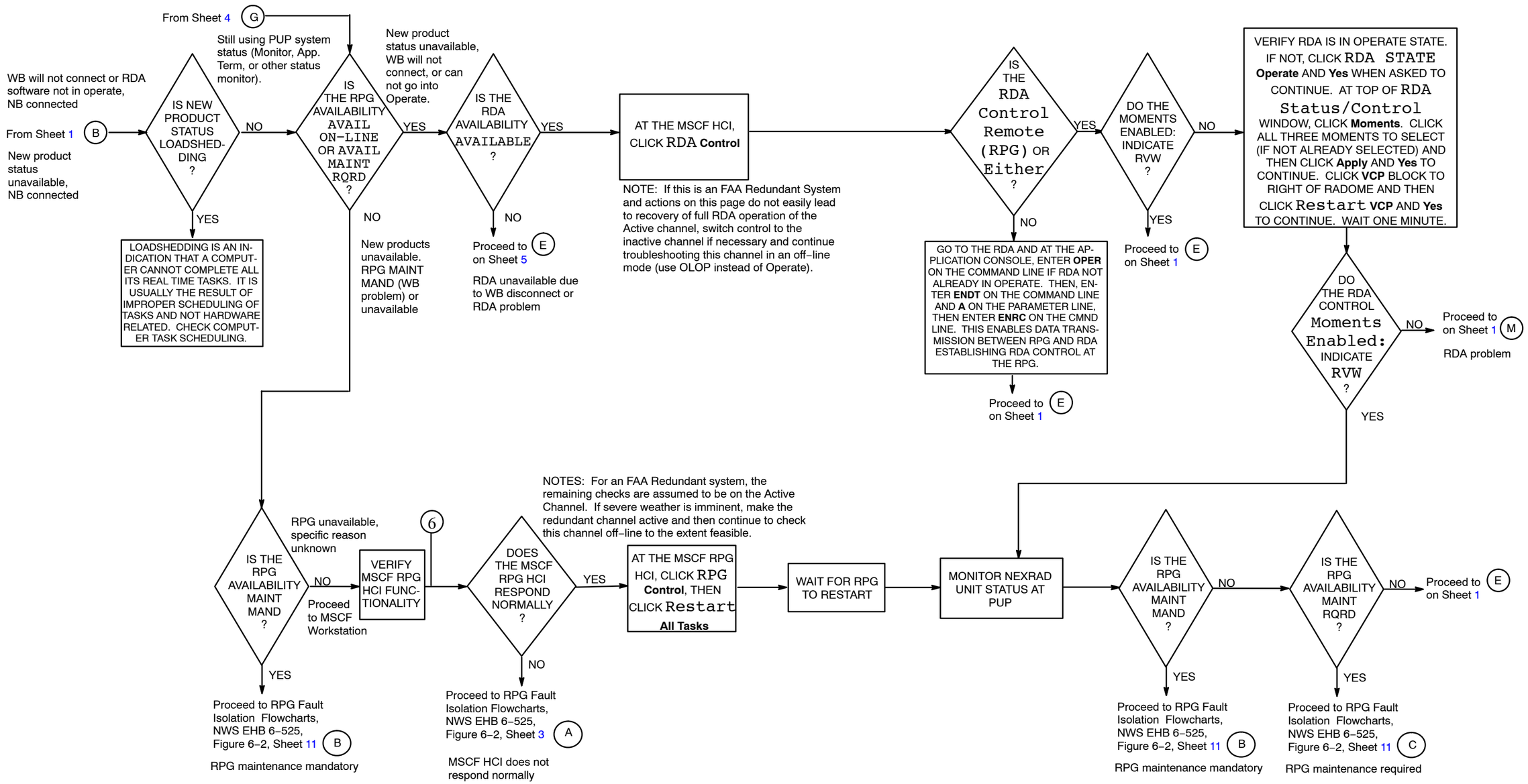

Figure 6–1. System Fault Isolation Flowchart (RPG Check) (Sheet 6 of 8)

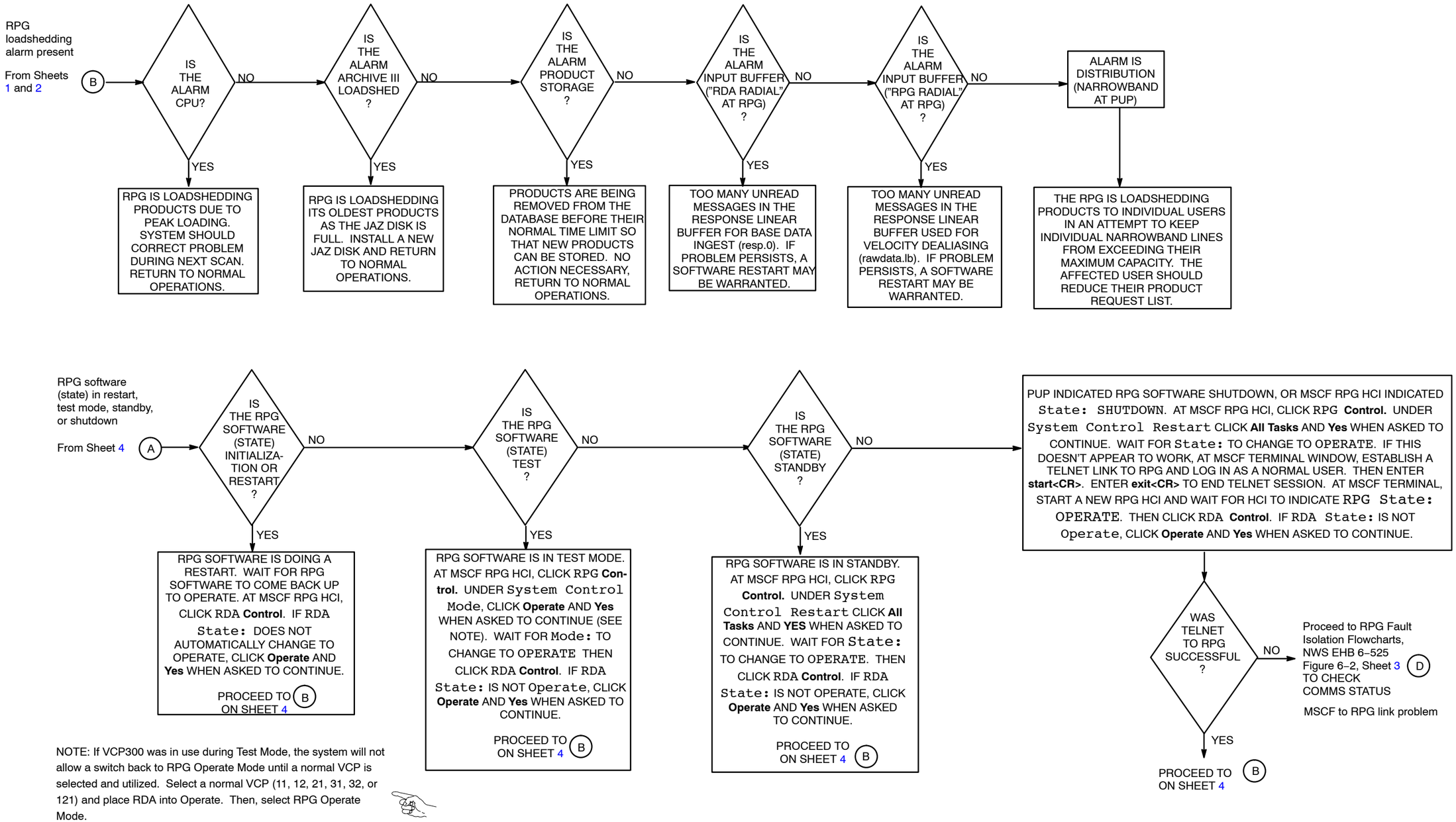

Figure 6–1. System Fault Isolation Flowchart (RPG Software, Alarms) (Sheet 7 of 8)

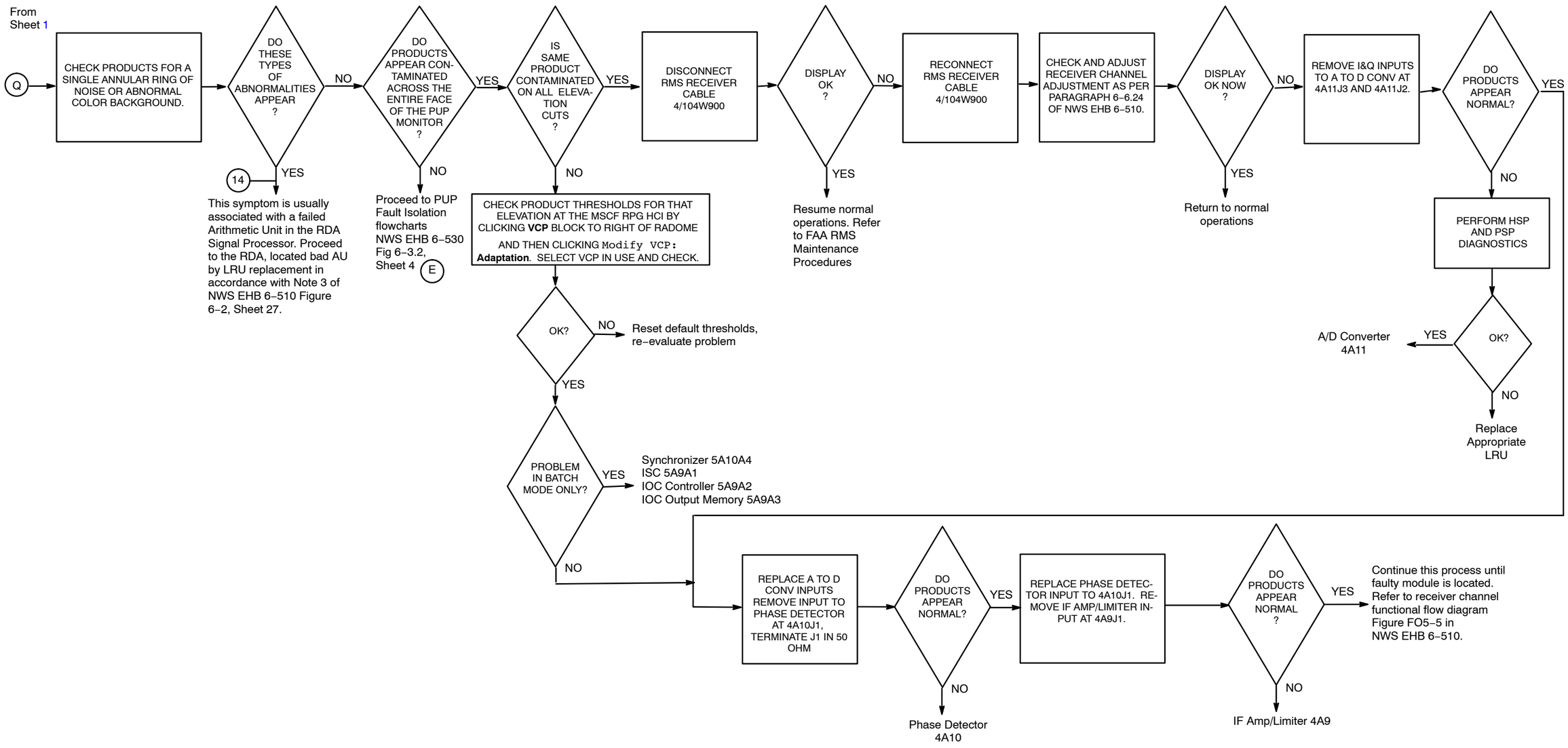

Figure 6–1. System Fault Isolation Flowchart (Sheet 8 of 8)

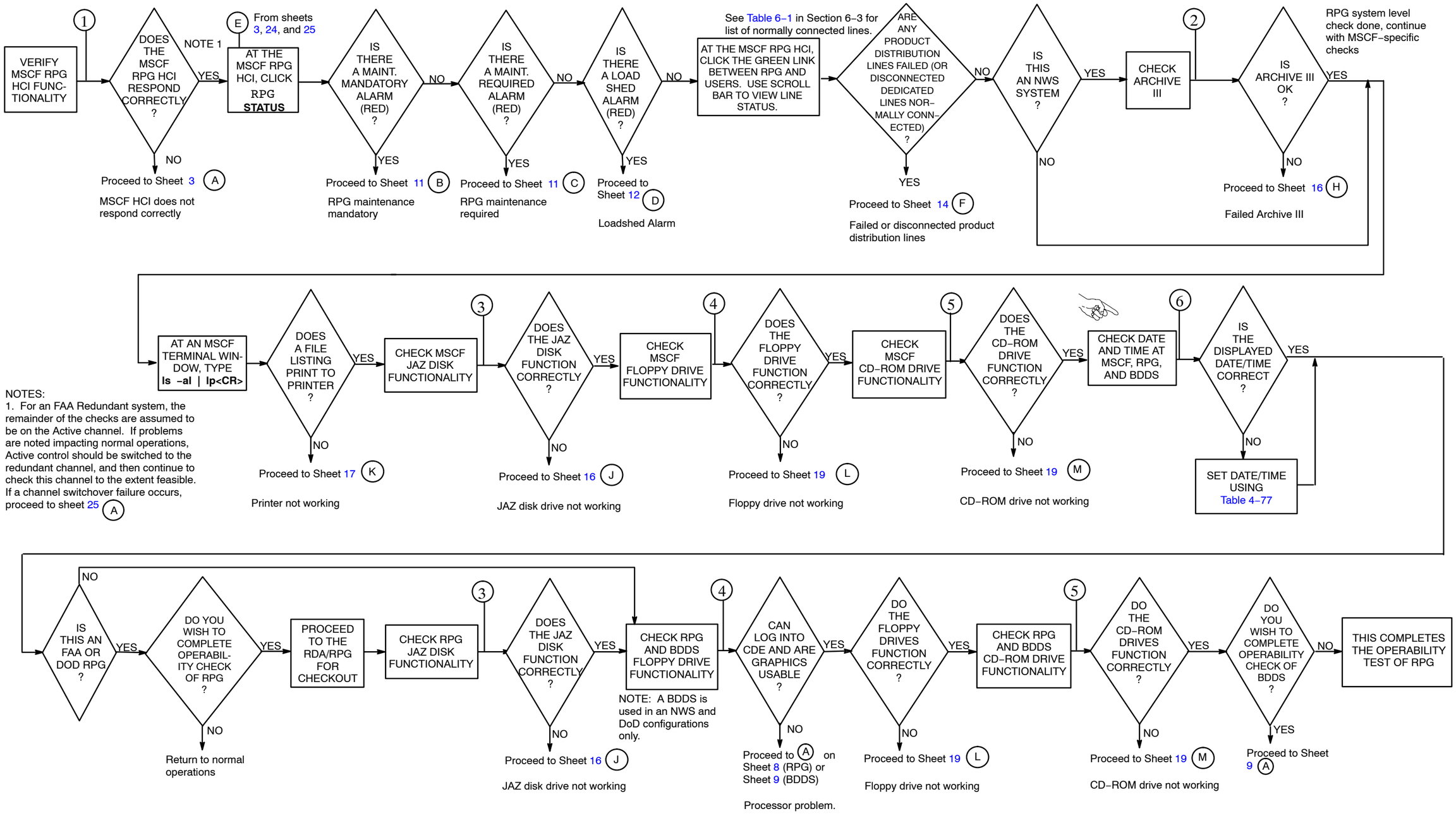

Figure 6–2. RPG Fault Isolation Flowchart (Operability Check) (Sheet 1 of 25)

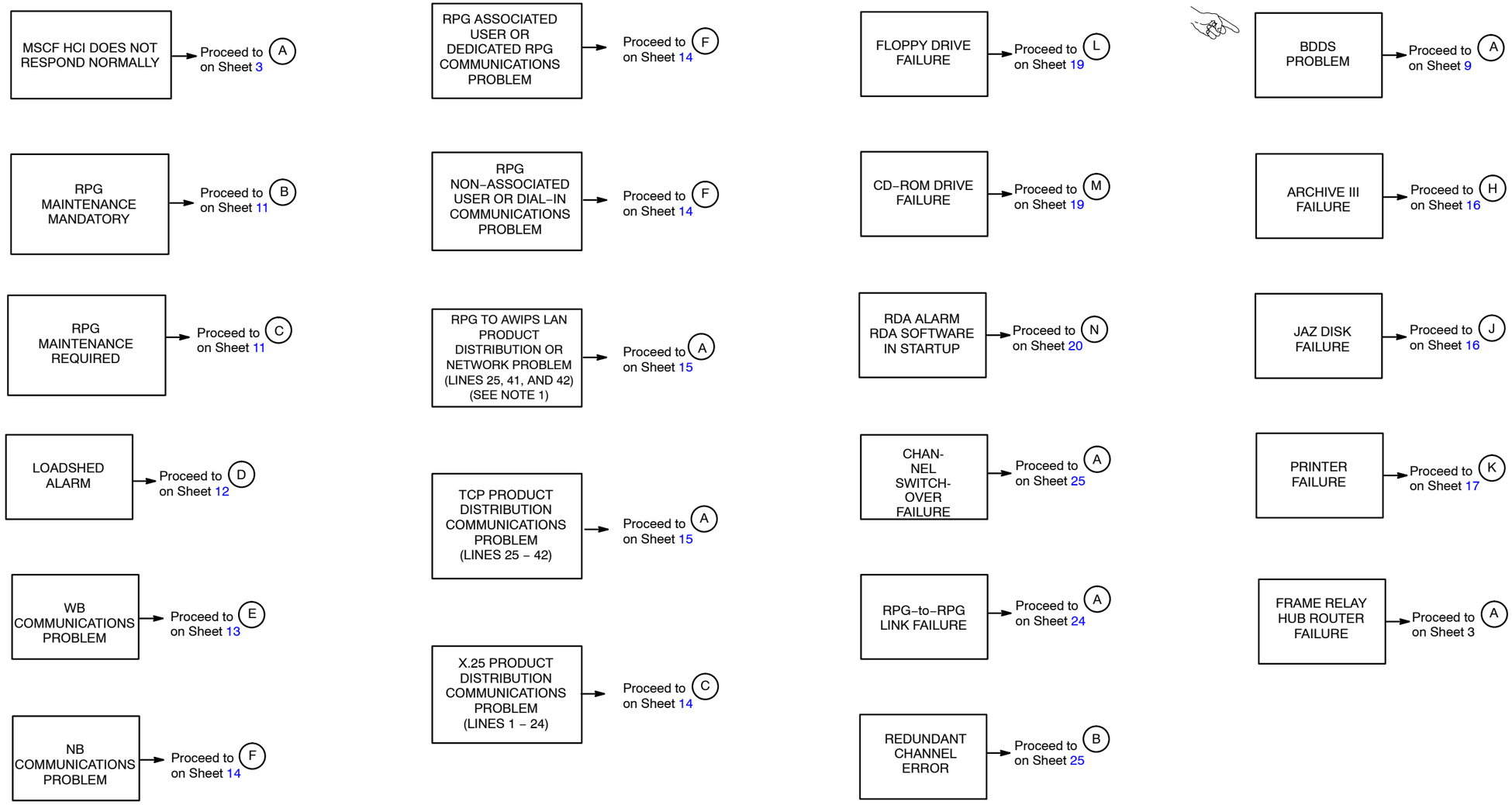

Figure 6–2. RPG Fault Isolation Flowchart (Quick Reference Sheet) (Sheet 2 of 25)

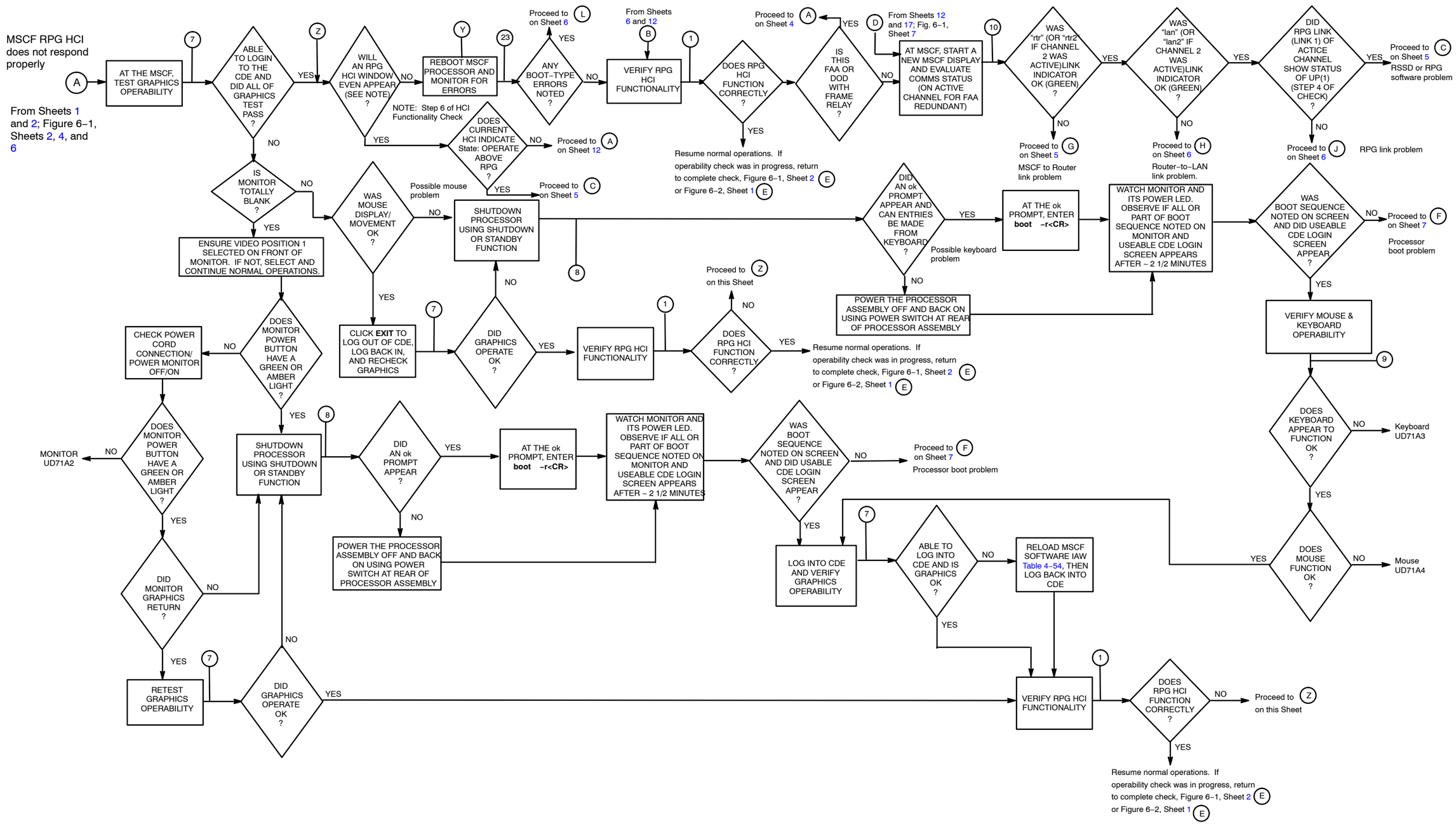

Figure 6–2. RPG Fault Isolation Flowchart (MSCF Processor) (Sheet 3 of 25)

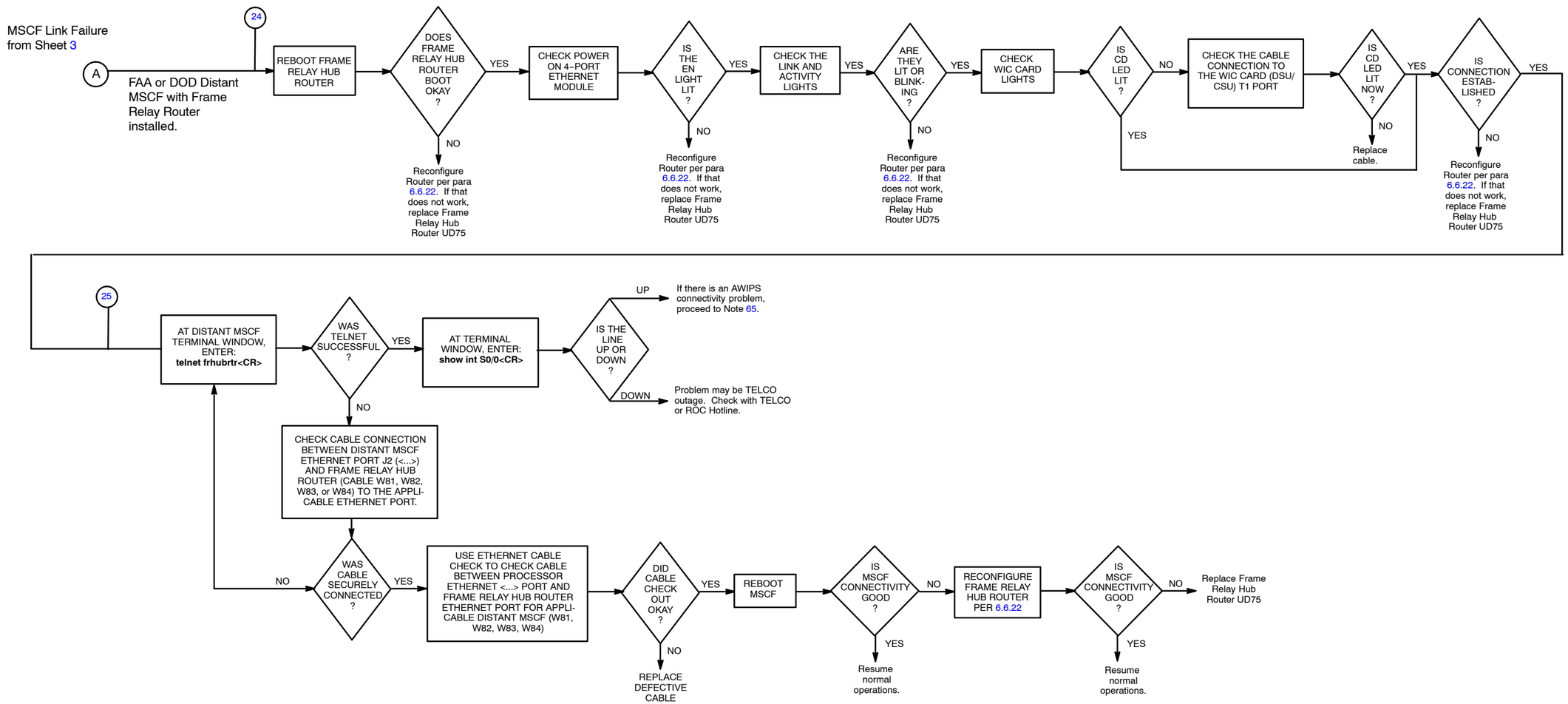

Figure 6–2. RPG Fault Isolation Flowchart (MSCF with Frame Relay Router) (Sheet 4 of 25)

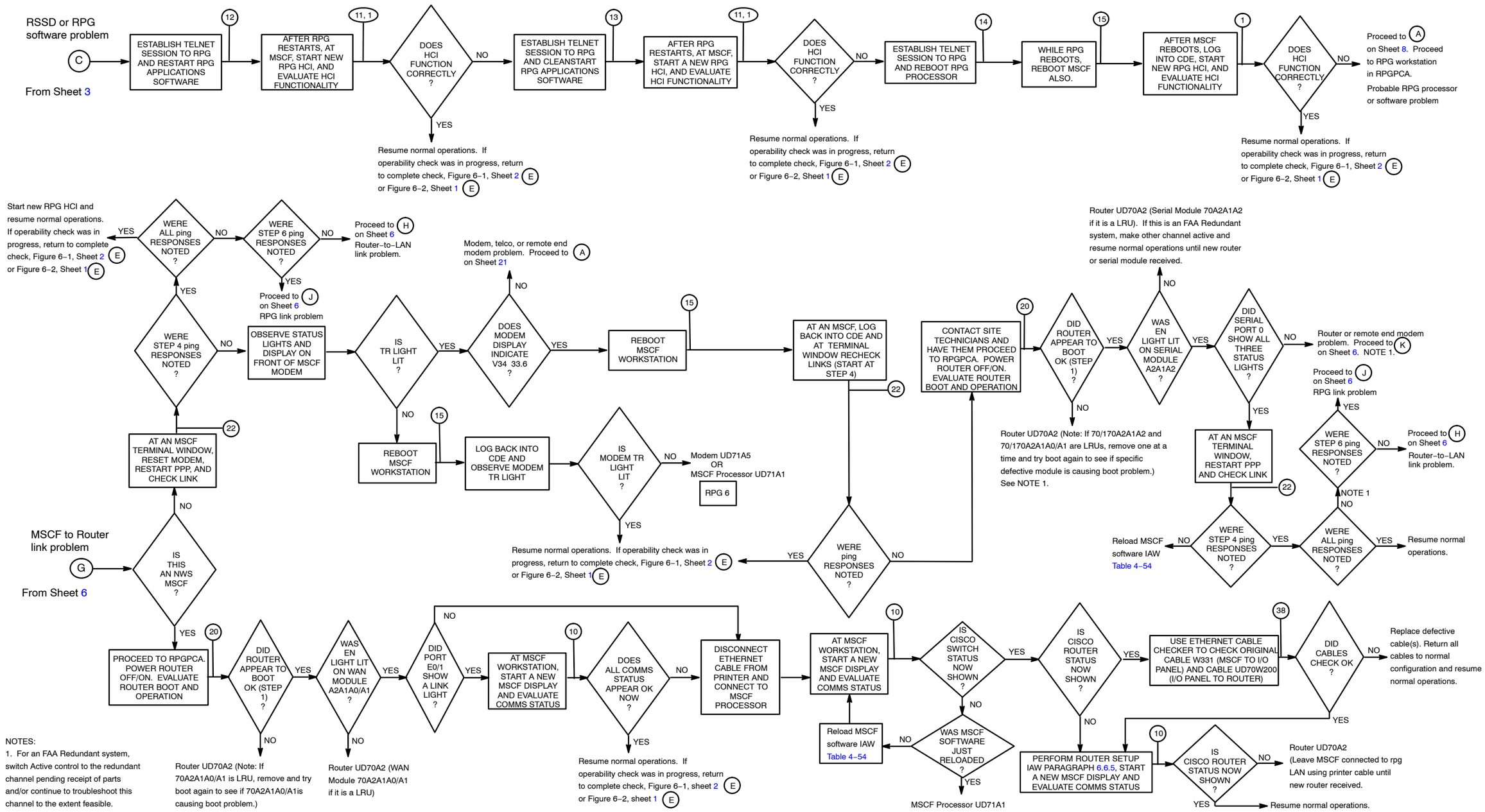

Figure 6–2. RPG Fault Isolation Flowchart (MSCF Link/RSSD Problem) (Sheet 5 of 25)

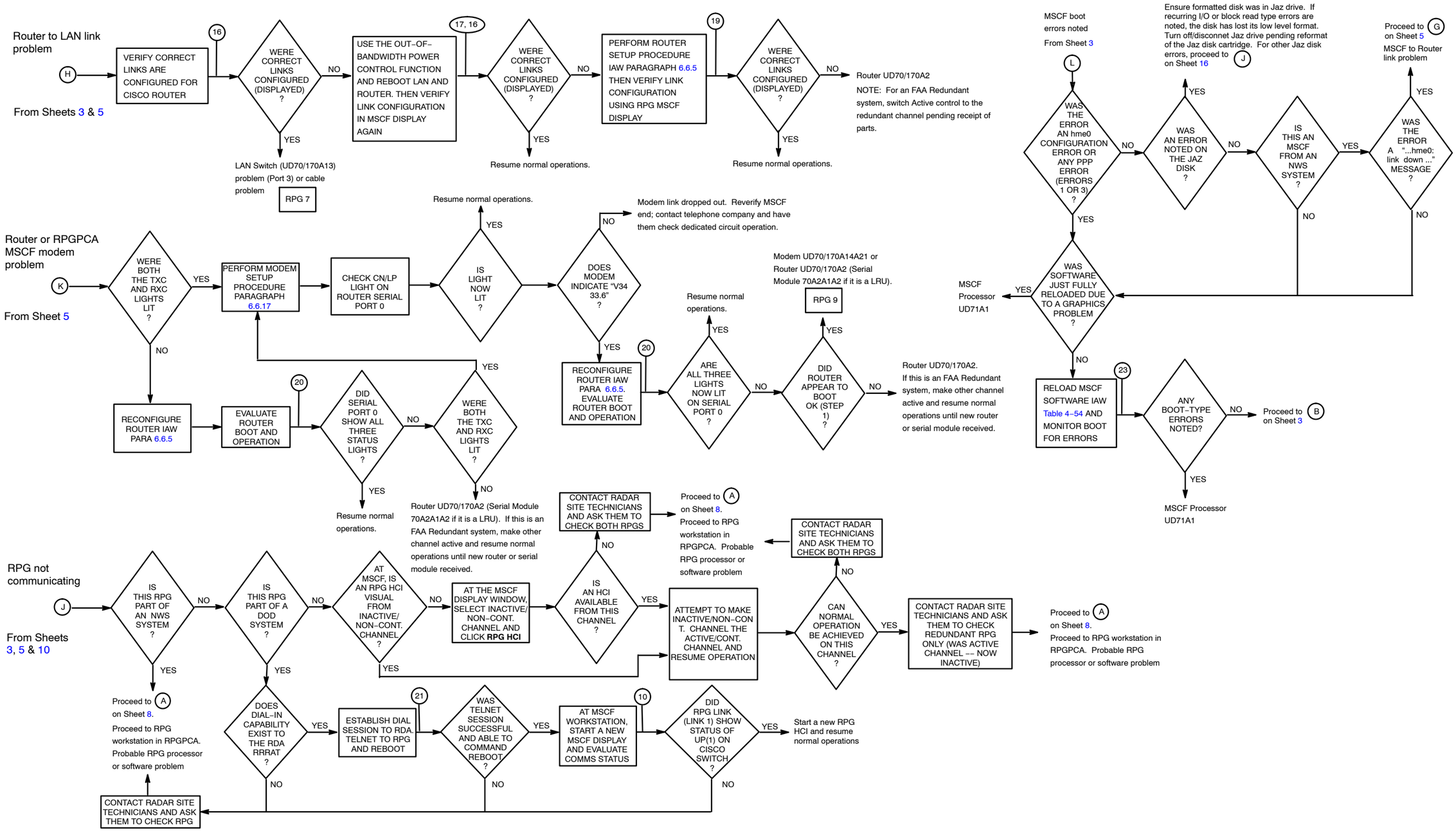

Figure 6–2. RPG Fault Isolation Flowchart (MSCF Boot, Router/LAN/RPG Links) (Sheet 6 of 25)

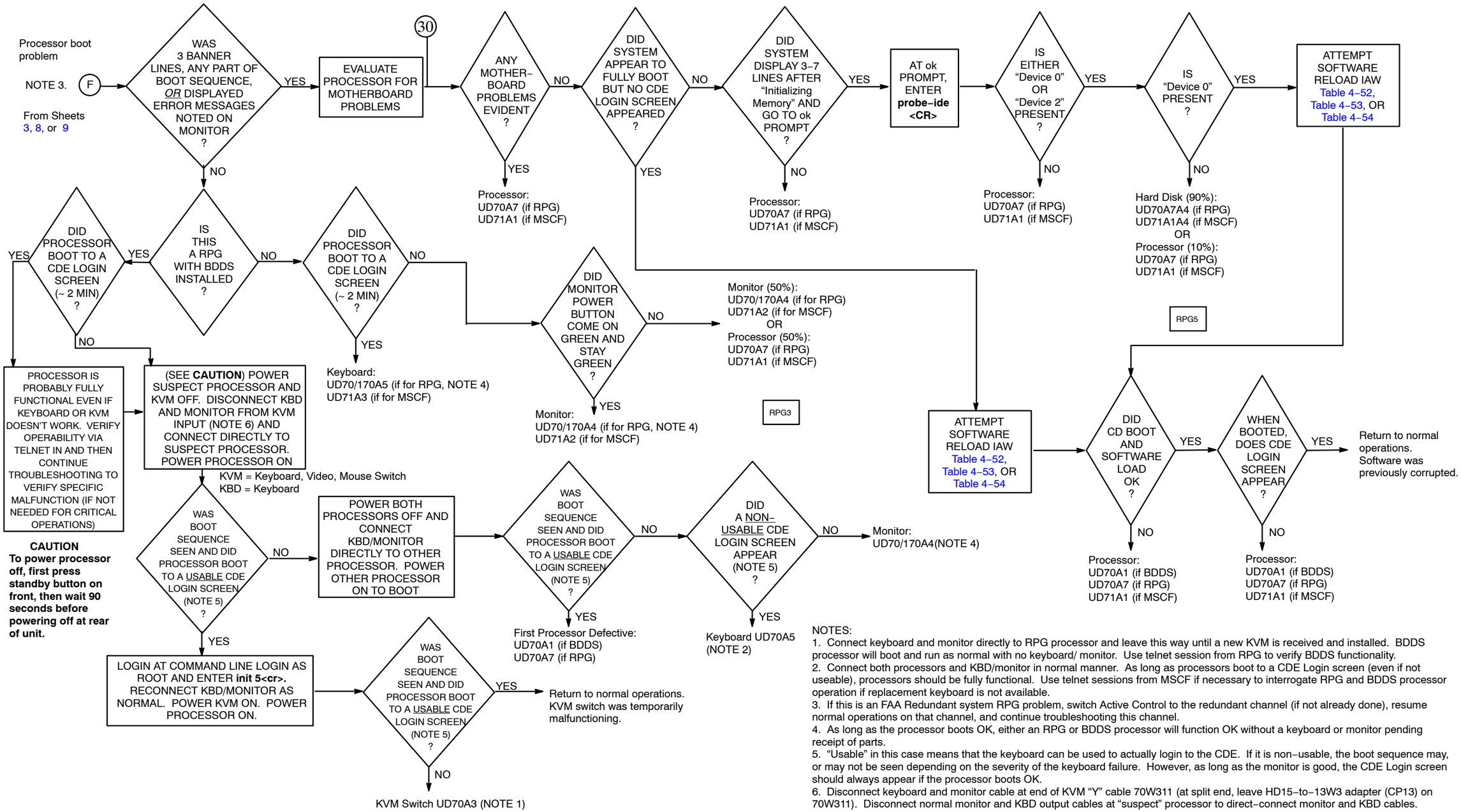

NOTES:

1. Connect keyboard and monitor directly to RPG processor and leave this way until a new KVM is received and installed. BDDS processor will boot and run as normal with no keyboard/ monitor. Use telnet session from RPG to verify BDDS functionality.
2. Connect both processors and KBD/monitor in normal manner. As long as processors boot to a CDE Login screen (even if not useable), processors should be fully functional. Use telnet sessions from MSCF if necessary to interrogate RPG and BDDS processor operation if replacement keyboard is not available.
3. If this is an FAA Redundant system RPG problem, switch Active Control to the redundant channel (if not already done), resume normal operations on that channel, and continue troubleshooting this channel.
4. As long as the processor boots OK, either an RPG or BDDS processor will function OK without a keyboard or monitor pending receipt of parts.
5. "Usable" in this case means that the keyboard can be used to actually login to the CDE. If it is non–usable, the boot sequence may, or may not be seen depending on the severity of the keyboard failure. However, as long as the monitor is good, the CDE Login screen should always appear if the processor boots OK.
6. Disconnect keyboard and monitor cable at end of KVM "Y" cable 70W311 (at split end, leave HD15–to–13W3 adapter (CP13) on 70W311). Disconnect normal monitor and KBD output cables at "suspect" processor to direct–connect monitor and KBD cables.

Figure 6–2. RPG Fault Isolation Flowchart (Processor Boot Problem) (Sheet 7 of 25)

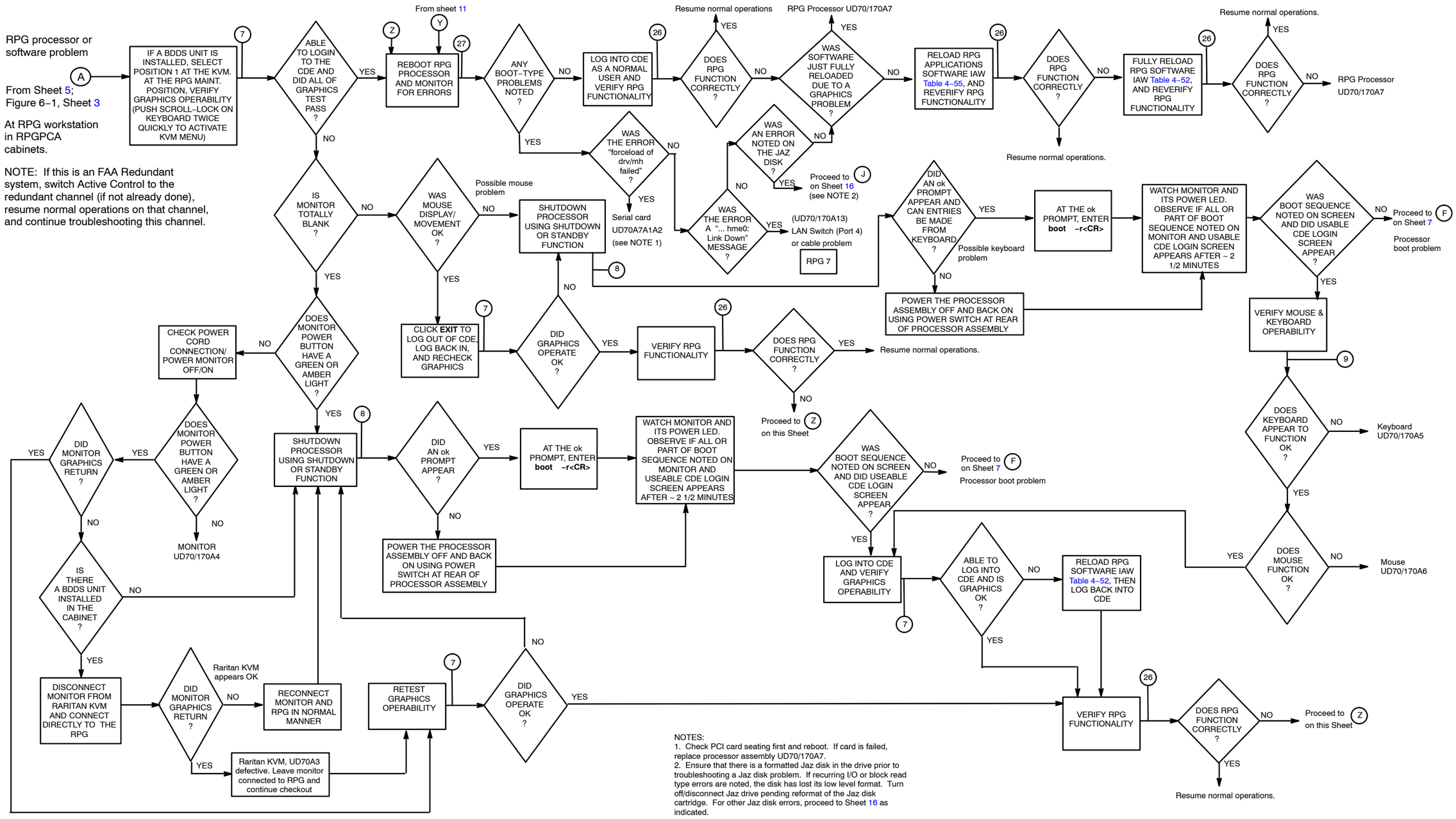

Figure 6–2. RPG Fault Isolation Flowchart (RPG Processor) (Sheet 8 of 25)

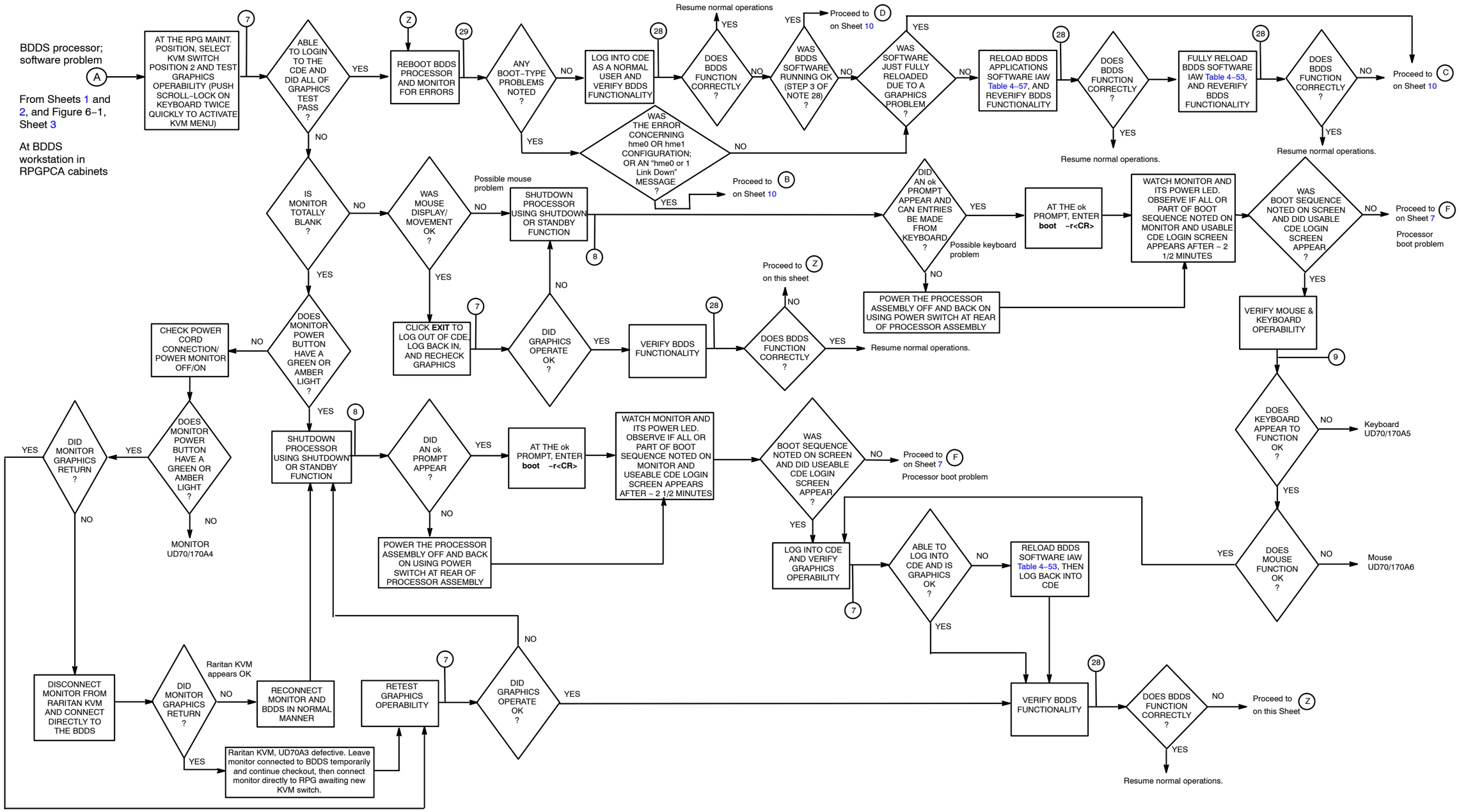

Figure 6–2. RPG Fault Isolation Flowchart (BDDS Processor) (Sheet 9 of 25)

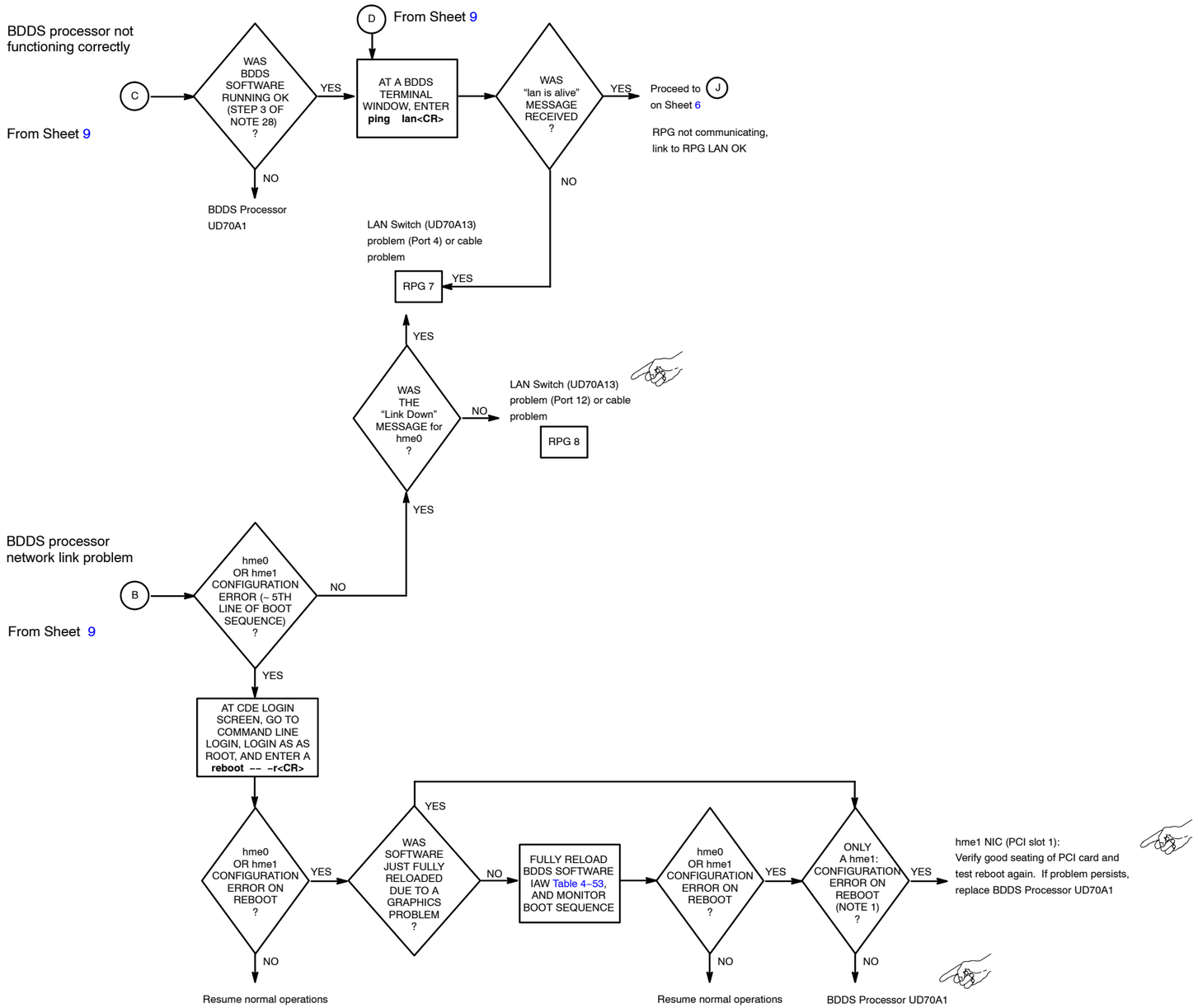

NOTES:

1. hme0 and hme1 may be listed on the same line; however, the actual device with the error will also show a colon (e.g., "hme1: No such device"). A specific "SIOGCFFLAGS" error may also be indicated against a specific defective network device.

Figure 6–2. RPG Fault Isolation Flowchart (BDDS Processor, Network Links) (Sheet 10 of 25)

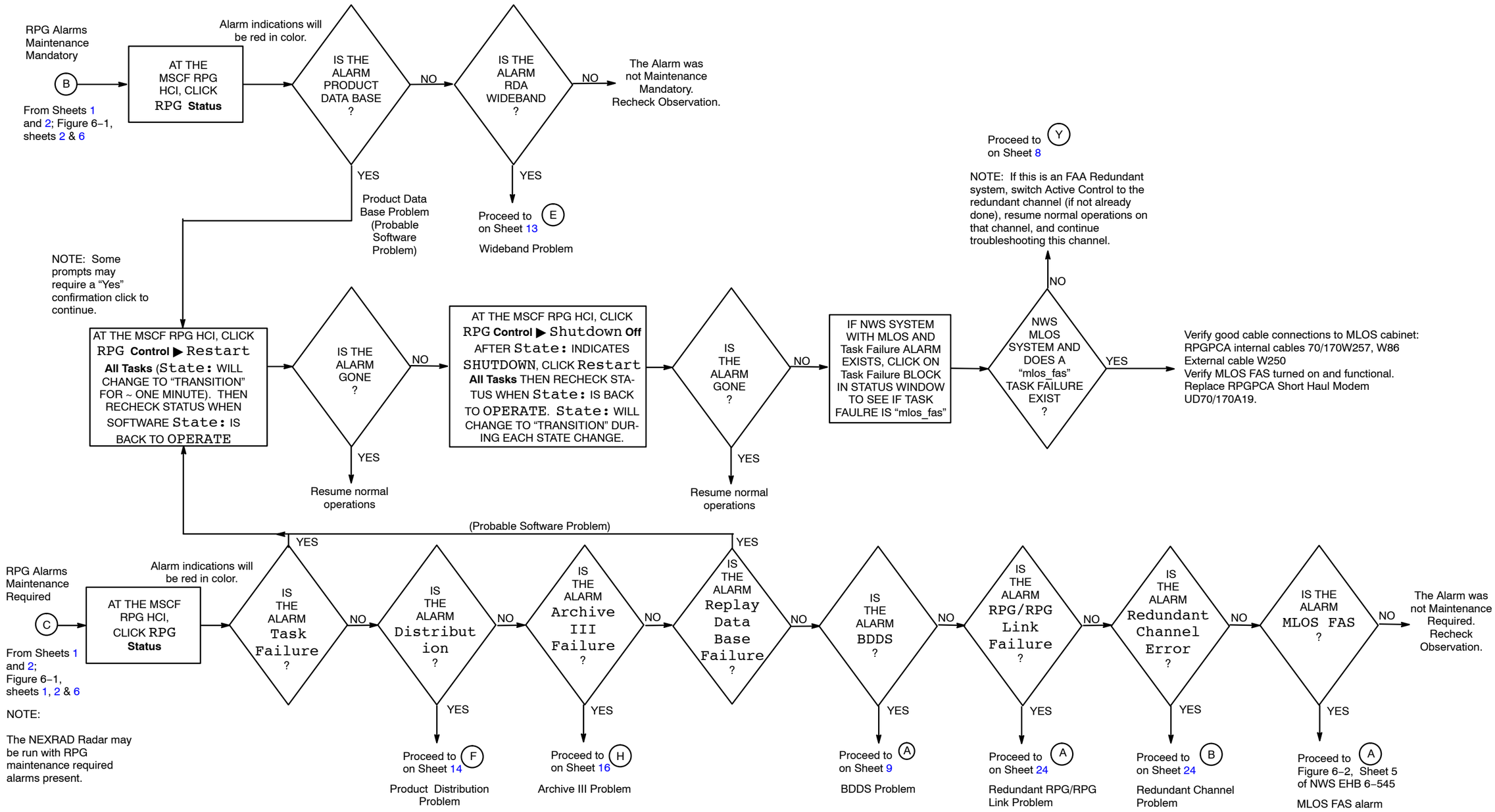

Figure 6–2. RPG Fault Isolation Flowchart (Maintenance Mandatory/Required Alarms) (Sheet 11 of 25)

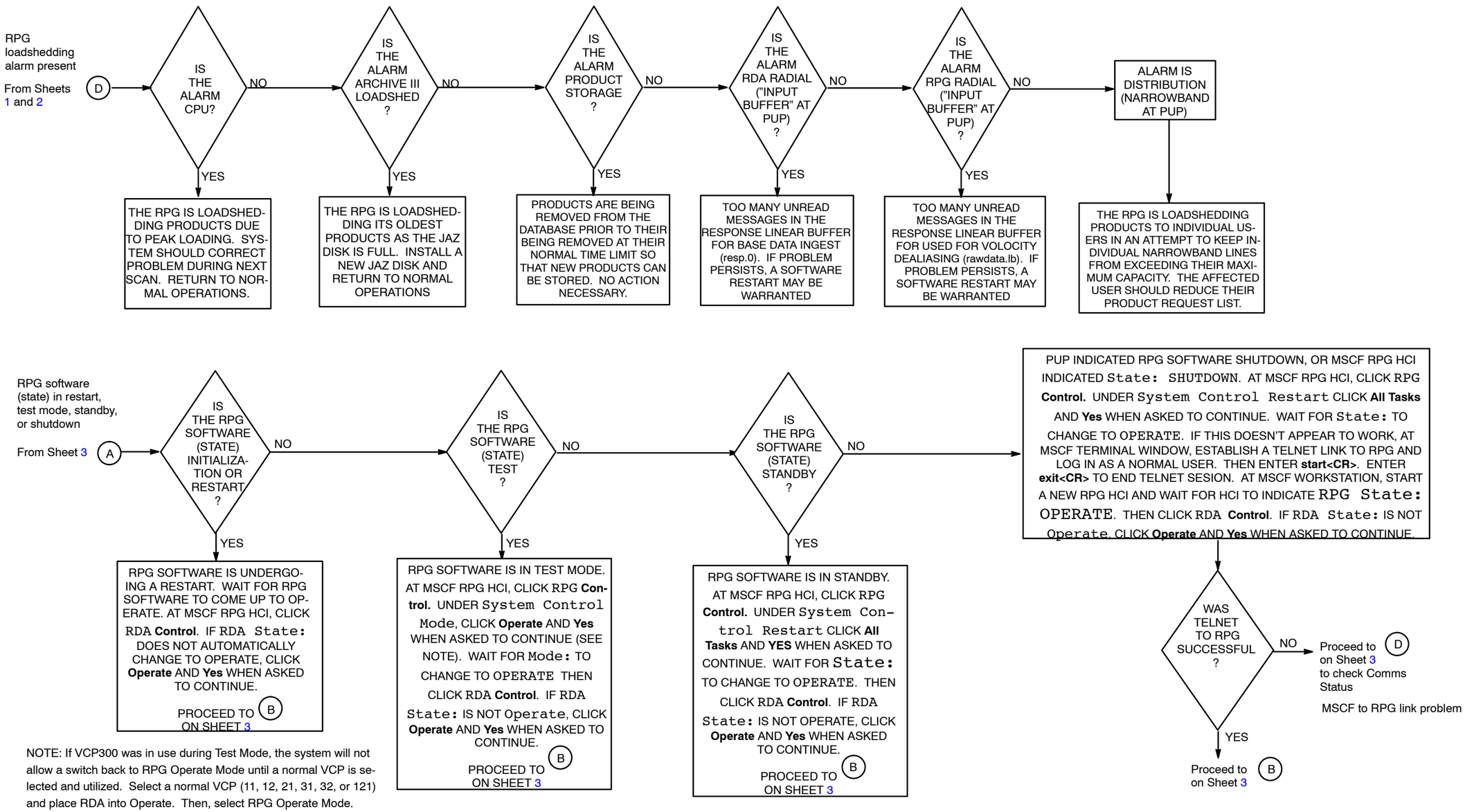

NOTE: If VCP300 was in use during Test Mode, the system will not allow a switch back to RPG Operate Mode until a normal VCP is selected and utilized. Select a normal VCP (11, 12, 21, 31, 32, or 121) and place RDA into Operate. Then, select RPG Operate Mode.

Figure 6–2. RPG Fault Isolation Flowchart (RPG Software, Alarms) (Sheet 12 of 25)

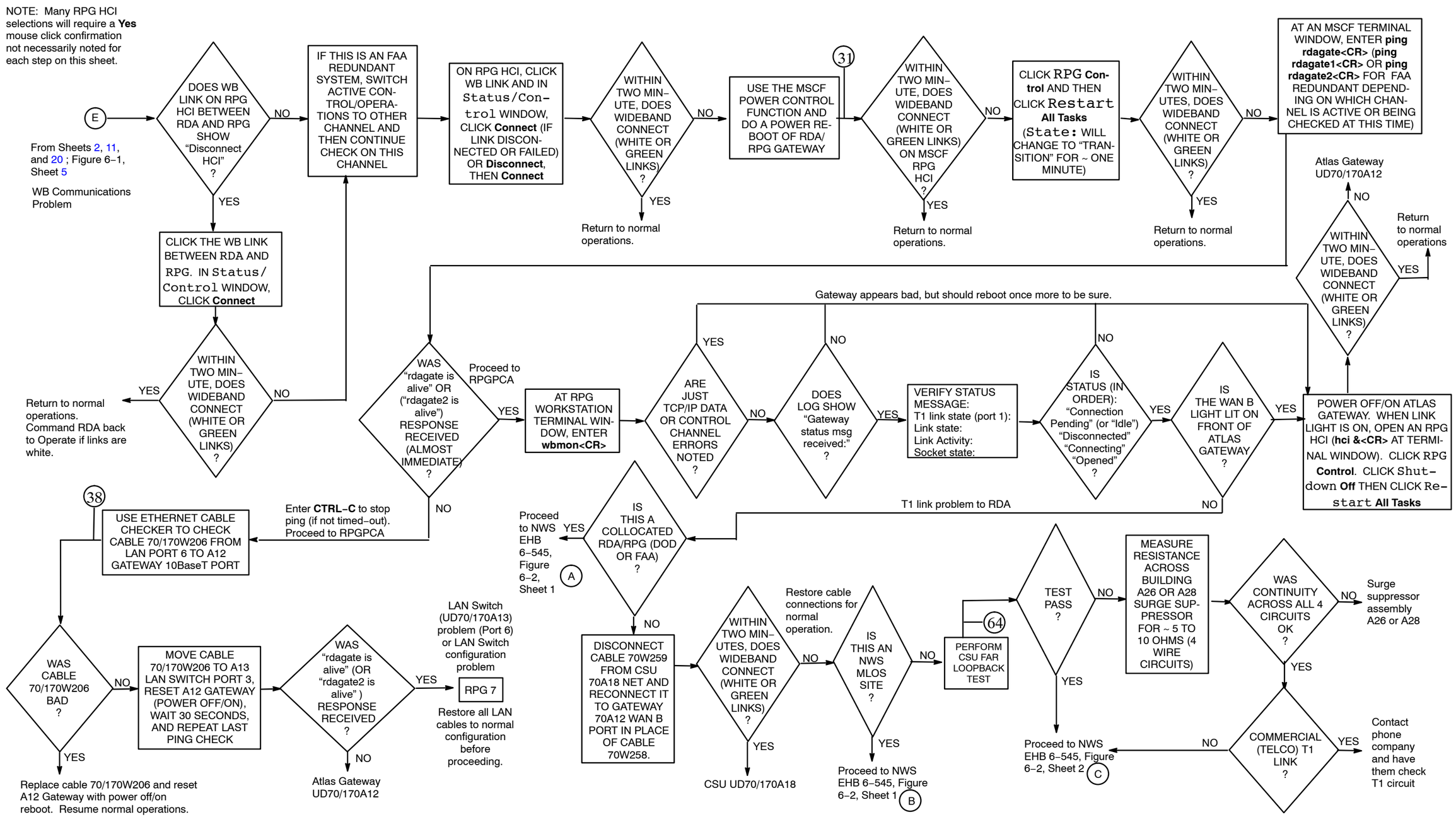

Figure 6–2. RPG Fault Isolation Flowchart (Wideband) (Sheet 13 of 25)

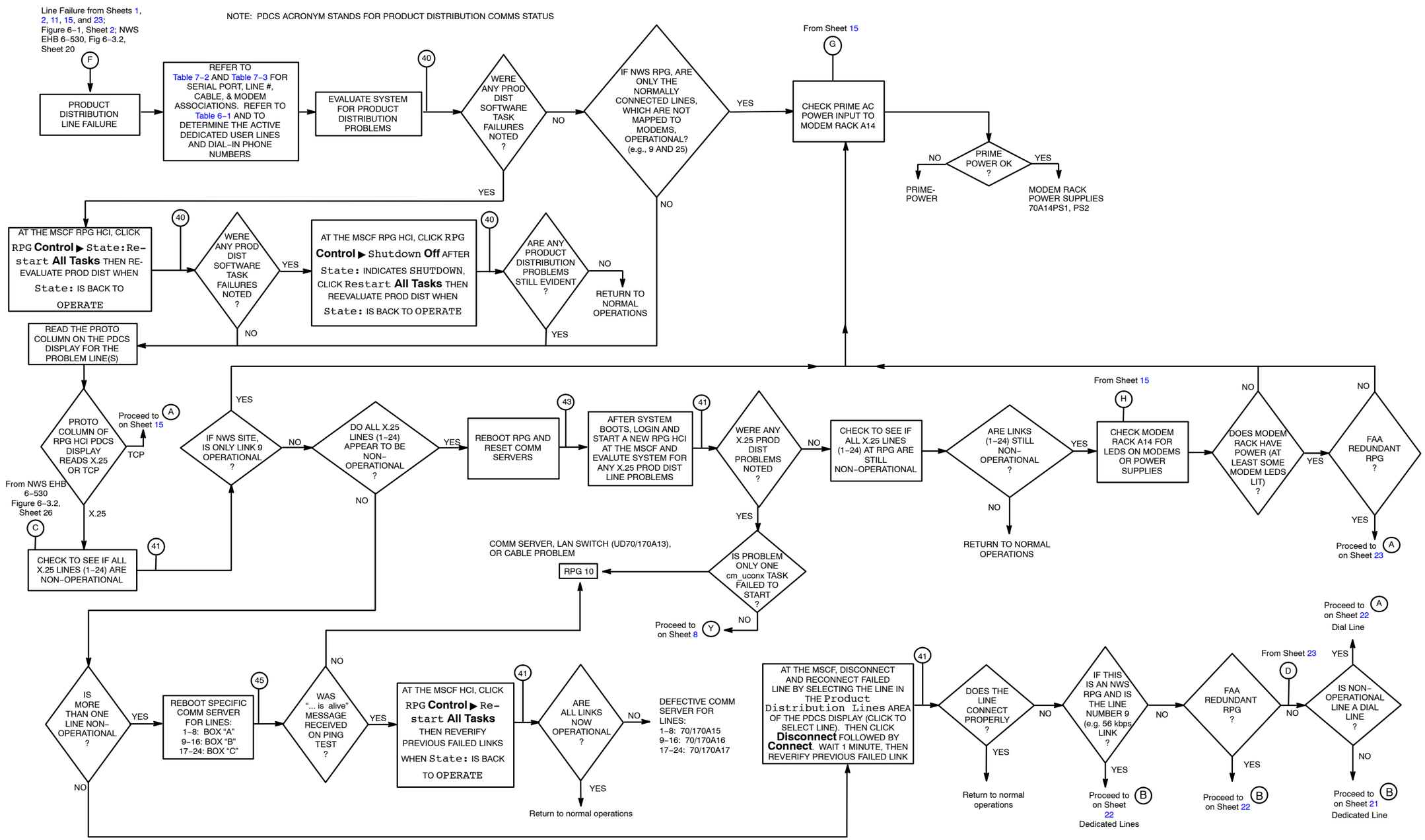

Figure 6–2. RPG Fault Isolation Flowchart (Product Distribution) (Sheet 14 of 25)

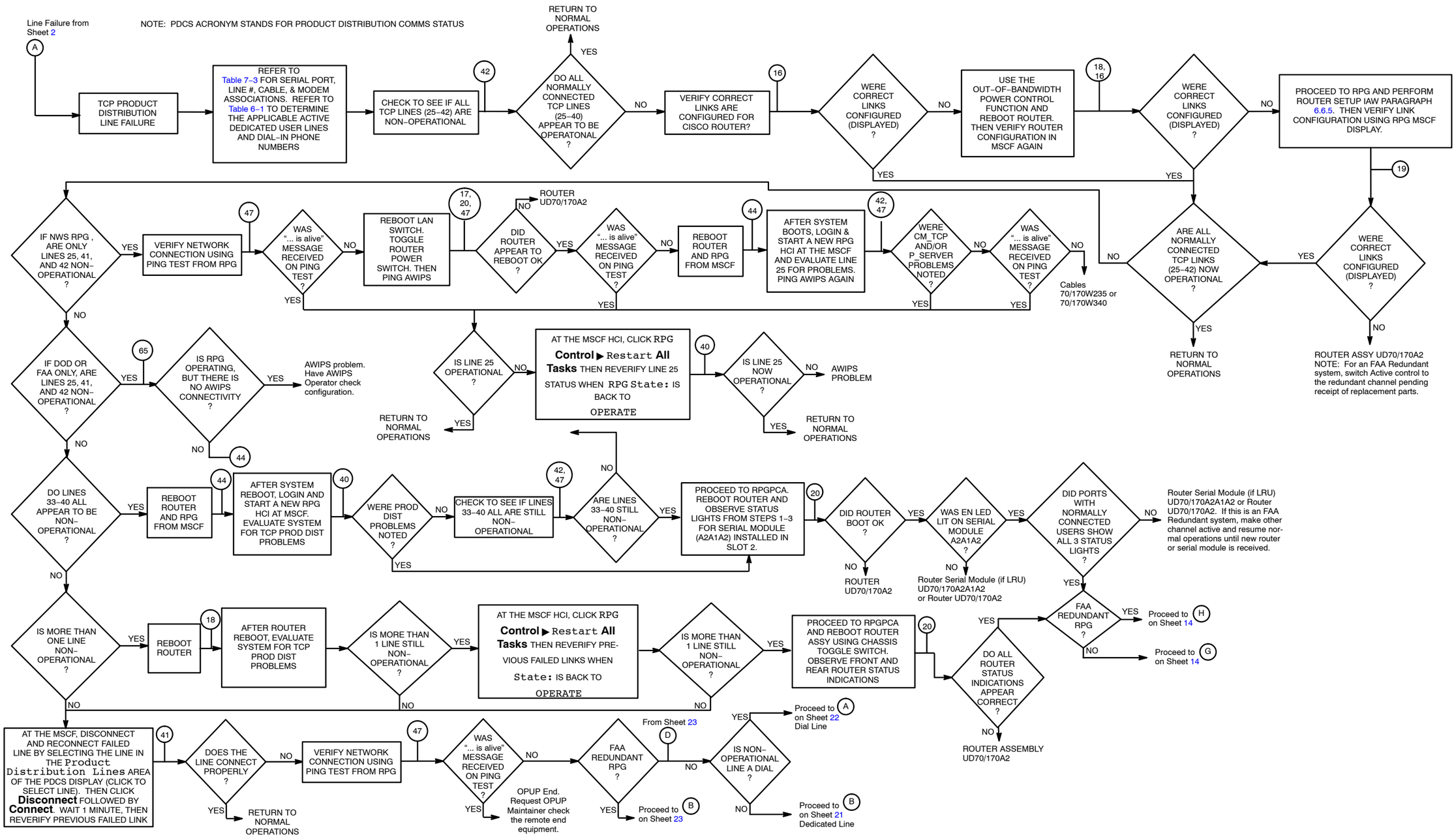

Figure 6–2. RPG Fault Isolation Flowchart (TCP Product Distribution) (Sheet 15 of 25)

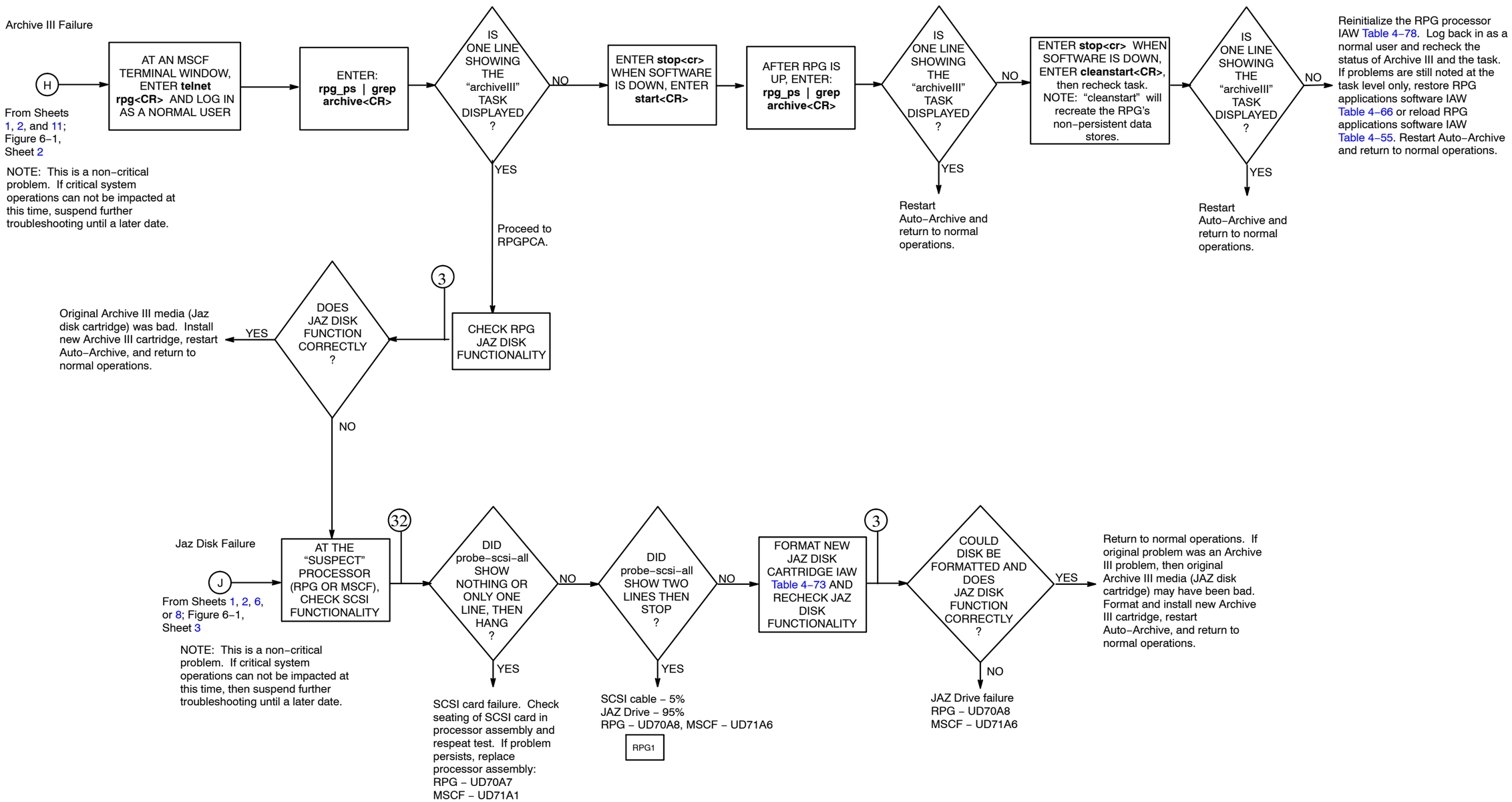

Figure 6–2. RPG Fault Isolation Flowchart (Archive III/Jaz Disk Failure) (Sheet 16 of 25)

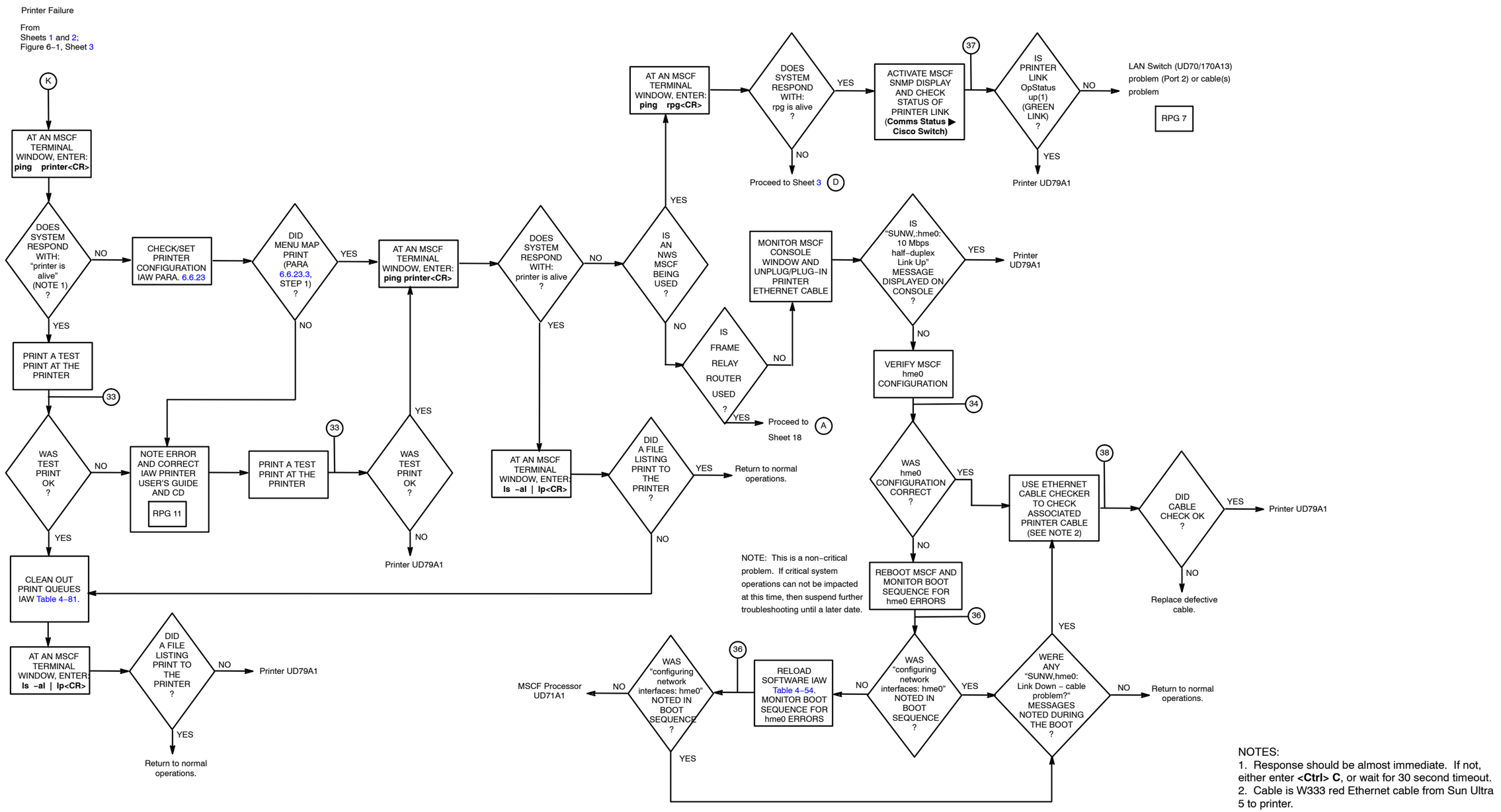

NOTES:
1. Response should be almost immediate. If not, either enter **<Ctrl> C**, or wait for 30 second timeout.
2. Cable is W333 red Ethernet cable from Sun Ultra 5 to printer.

Figure 6–2. RPG Fault Isolation Flowchart (MSCF Printer) (Sheet 17 of 25)

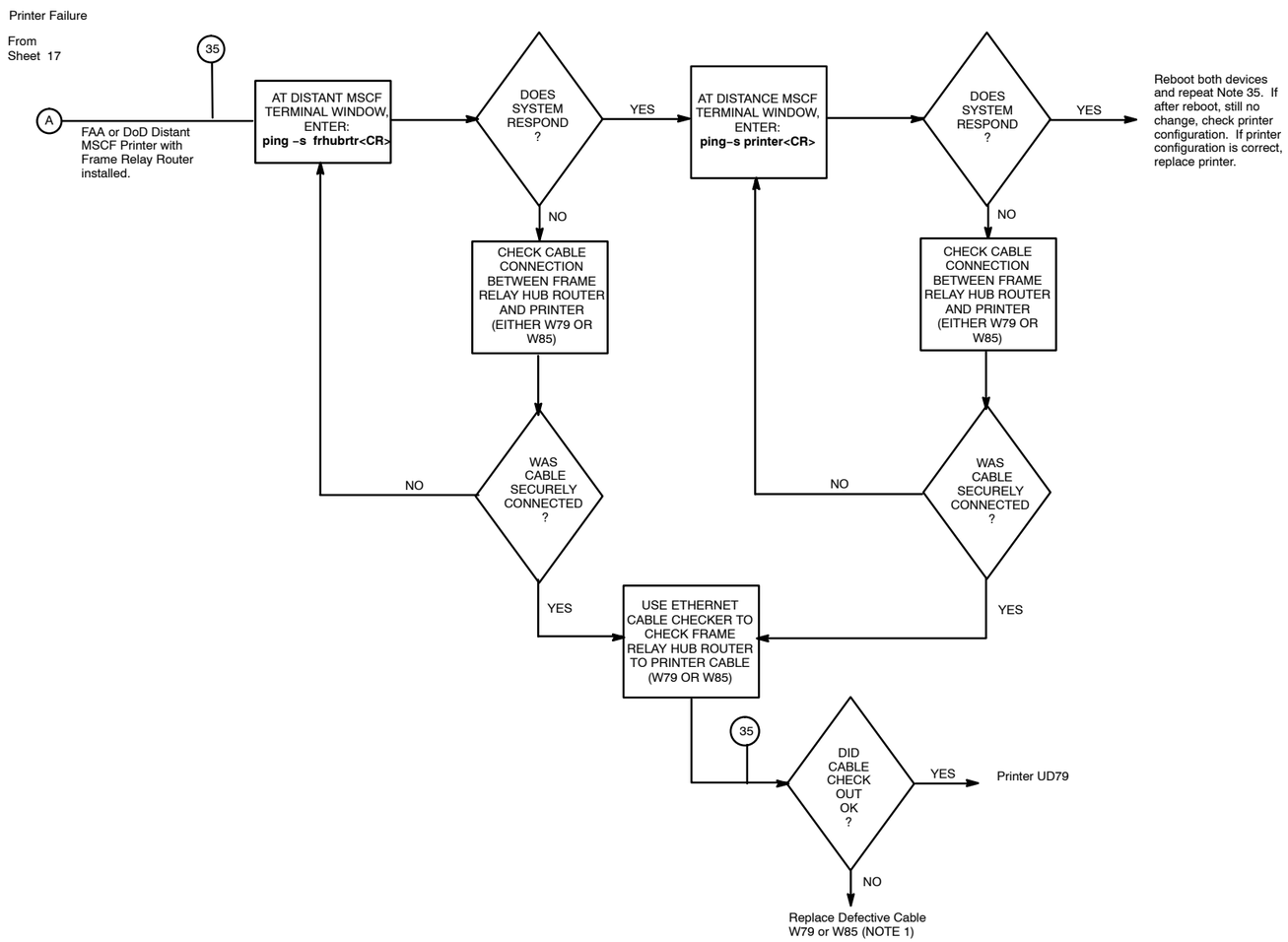

NOTE:

1. Cable W79 or W85 is a cross–over cable from Frame Relay Router UD75 to the Printer UD79.

Figure 6–2. RPG Fault Isolation Flowchart (MSCF Printer) (Sheet 18 of 25)

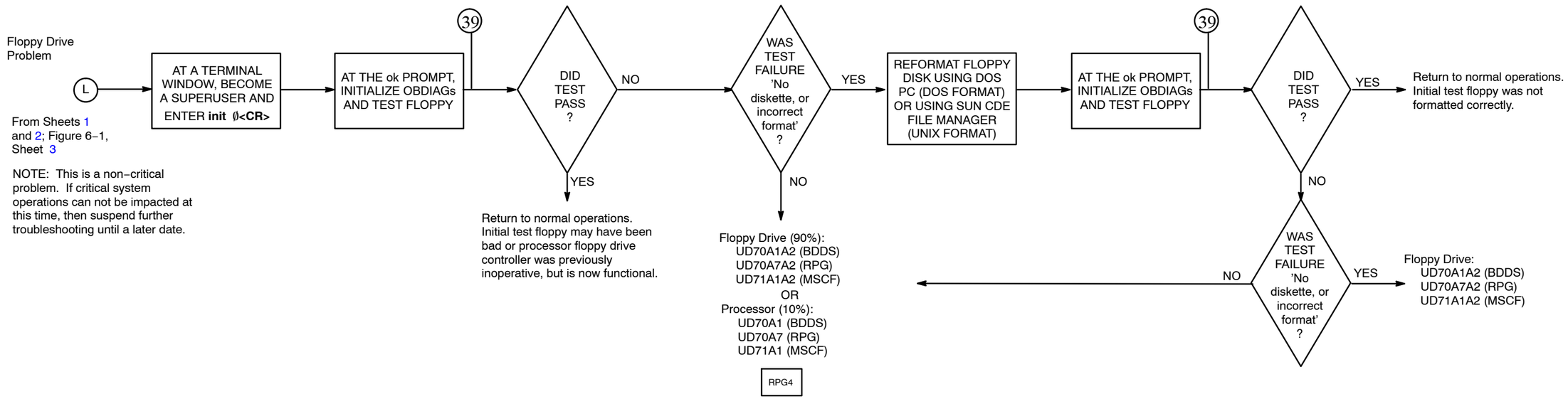

Figure 6–2. RPG Fault Isolation Flowchart (Floppy/CD–ROM Drives) (Sheet 19 of 25)

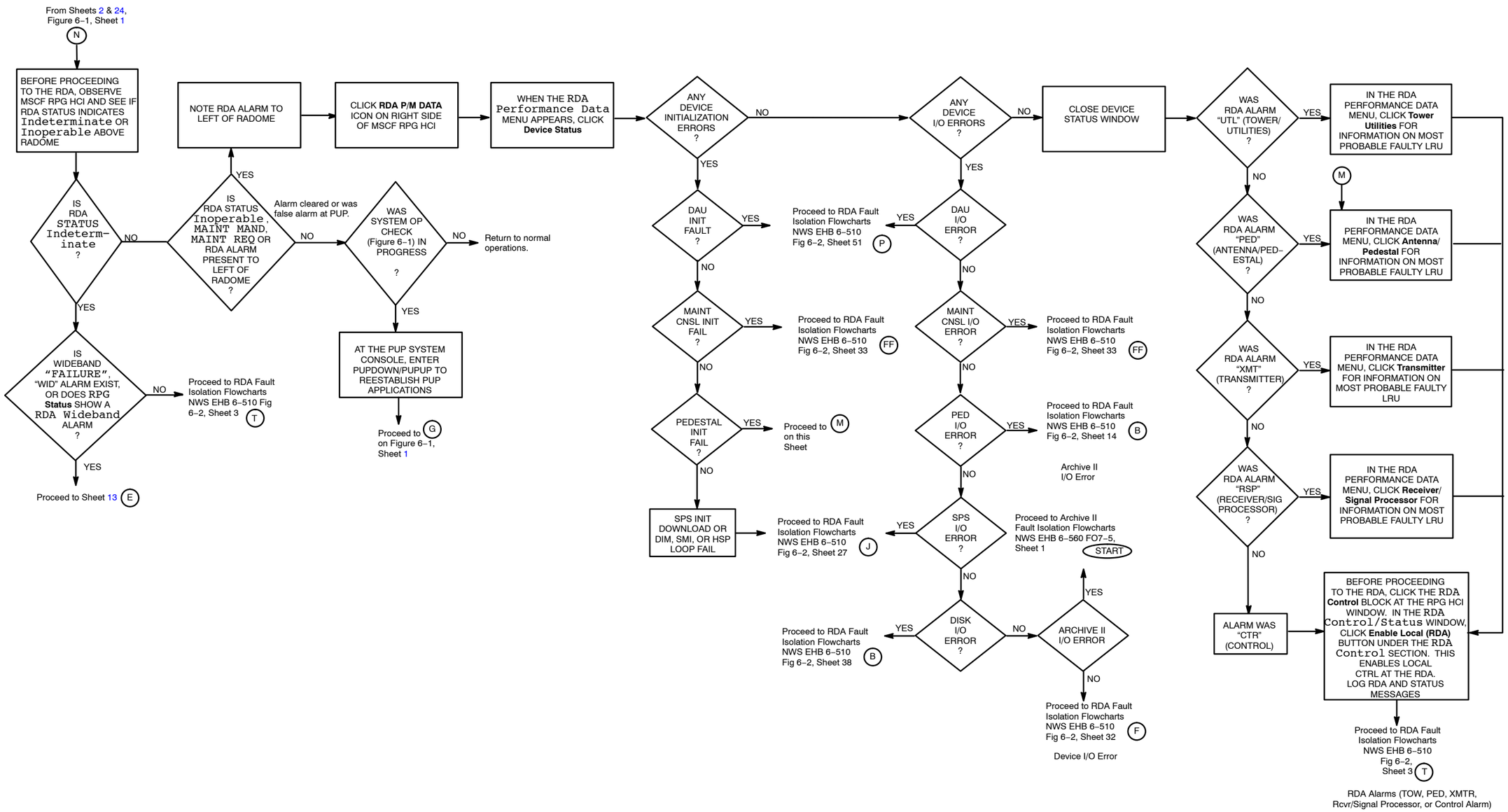

Figure 6–2. RPG Fault Isolation Flowchart (RDA Alarms) (Sheet 20 of 25)

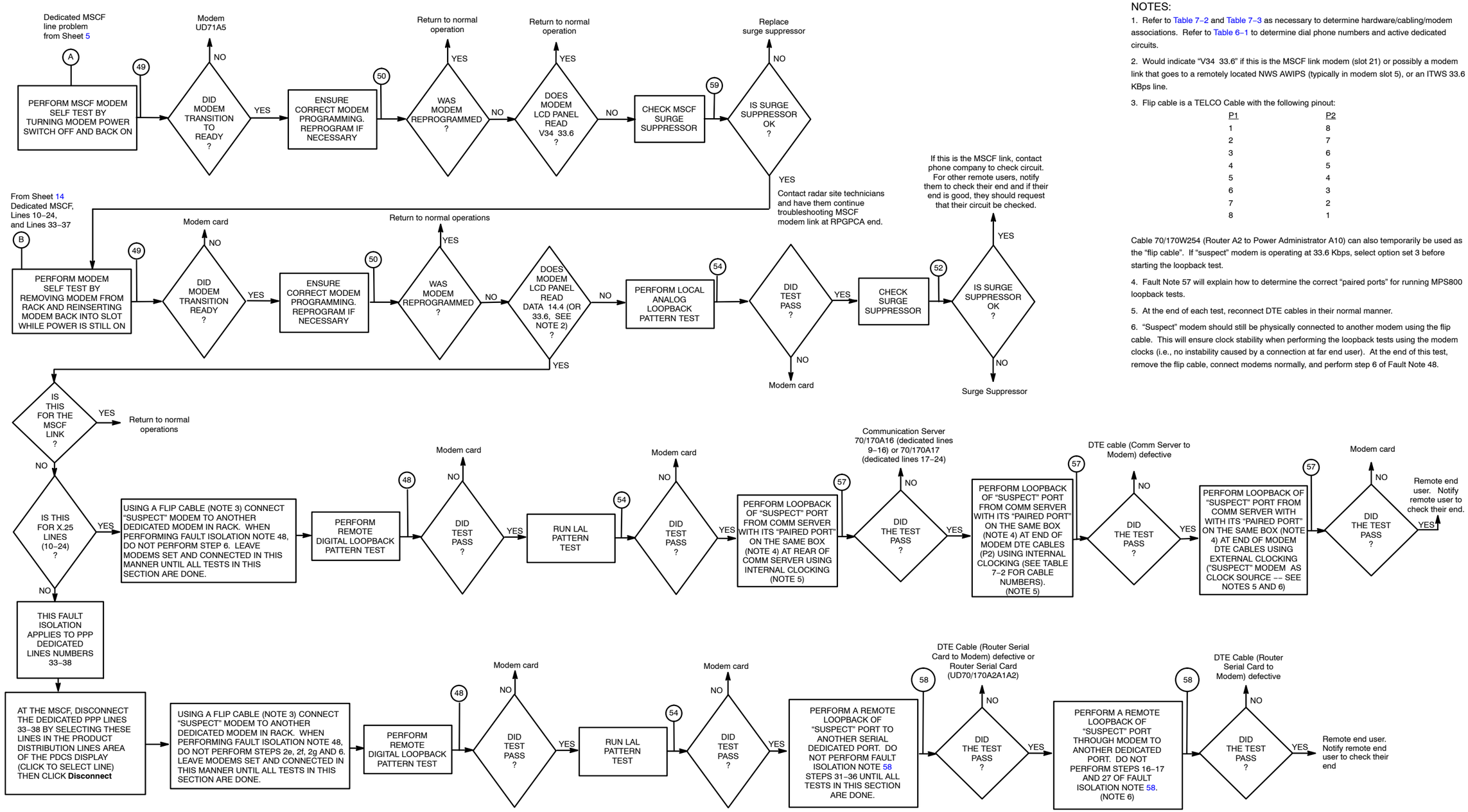

NOTES:

1. Refer to Table 7–2 and Table 7–3 as necessary to determine hardware/cabling/modem associations. Refer to Table 6–1 to determine dial phone numbers and active dedicated circuits.

2. Would indicate "V34 33.6" if this is the MSCF link modem (slot 21) or possibly a modem link that goes to a remotely located NWS AWIPS (typically in modem slot 5), or an ITWS 33.6 KBps line.

3. Flip cable is a TELCO Cable with the following pinout:

P1	P2
1	8
2	7
3	6
4	5
5	4
6	3
7	2
8	1

Cable 70/170W254 (Router A2 to Power Administrator A10) can also temporarily be used as the "flip cable". If "suspect" modem is operating at 33.6 Kbps, select option set 3 before starting the loopback test.

4. Fault Note 57 will explain how to determine the correct "paired ports" for running MPS800 loopback tests.

5. At the end of each test, reconnect DTE cables in their normal manner.

6. "Suspect" modem should still be physically connected to another modem using the flip cable. This will ensure clock stability when performing the loopback tests using the modem clocks (i.e., no instability caused by a connection at far end user). At the end of this test, remove the flip cable, connect modems normally, and perform step 6 of Fault Note 48.

Figure 6–2. RPG Fault Isolation Flowchart (Dedicated Product Distribution Link) (Sheet 21 of 25)

NOTES:
1. At the end of each test, reconnect DTE cables in their normal manner.

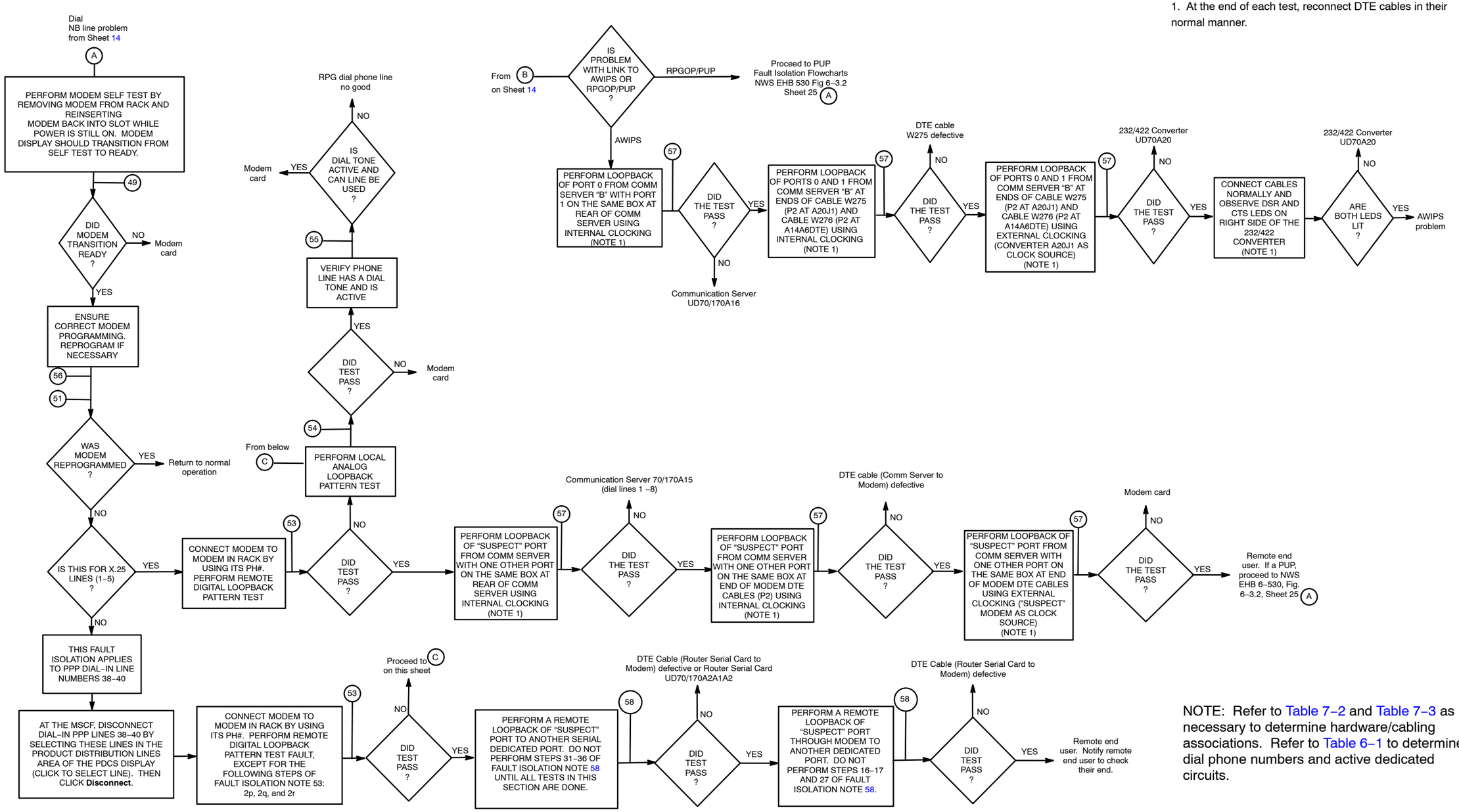

NOTE: Refer to Table 7–2 and Table 7–3 as necessary to determine hardware/cabling associations. Refer to Table 6–1 to determine dial phone numbers and active dedicated circuits.

Figure 6–2. RPG Fault Isolation Flowchart (Dial–Up Product Distribution Links, NWS 56K bps to AWIPS) (Sheet 22 of 25)

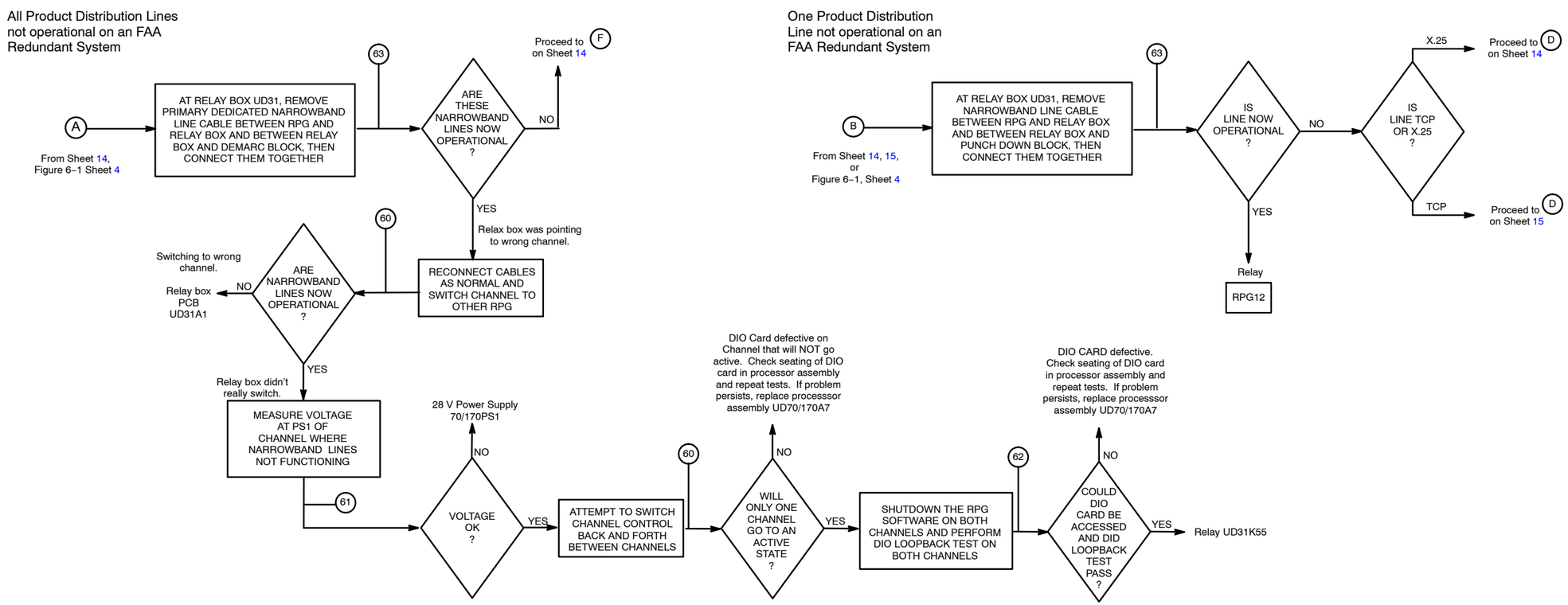

Figure 6–2. RPG Fault Isolation Flowchart (Redundant) (Sheet 23 of 25)

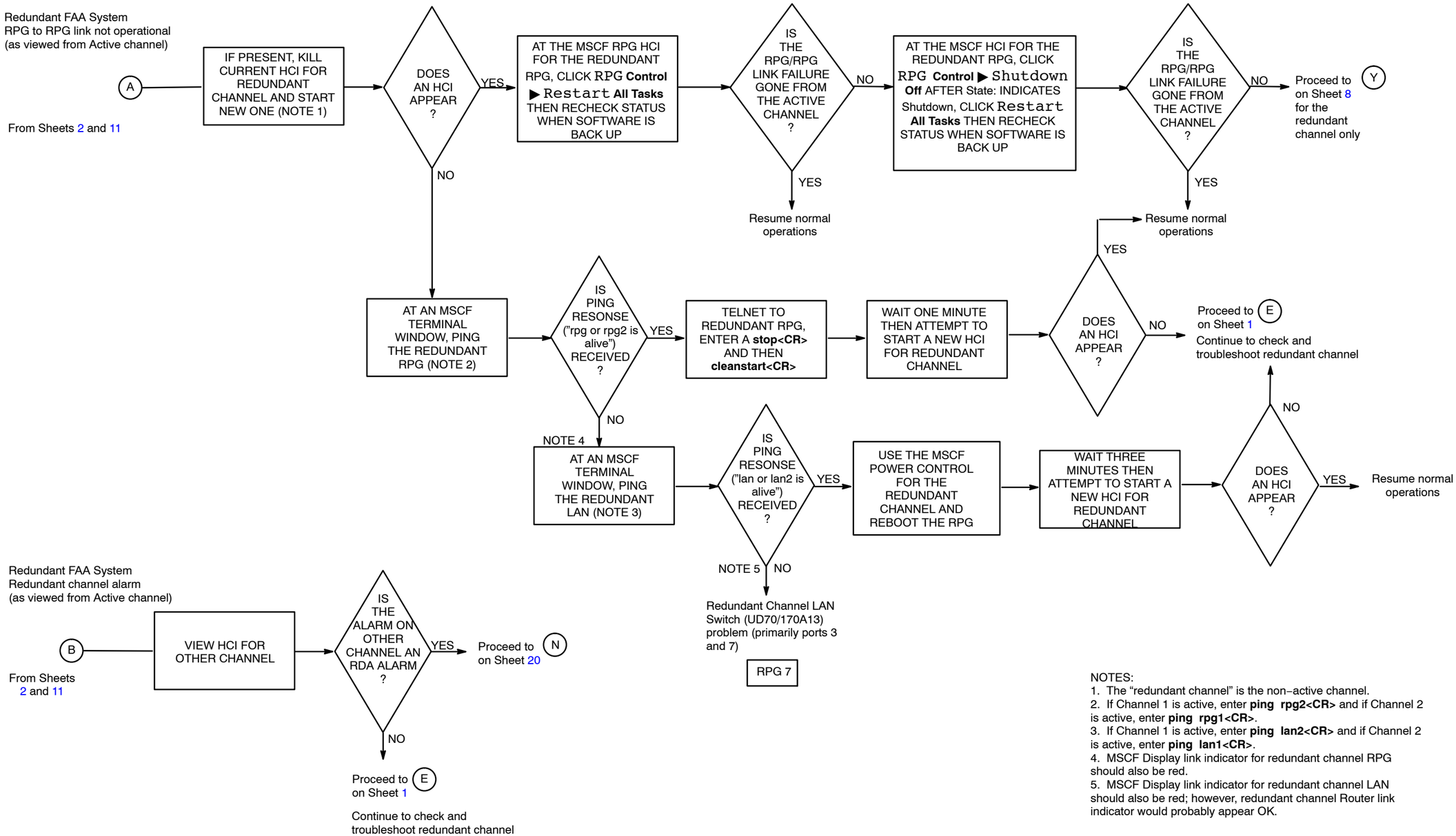

NOTES:
1. The "redundant channel" is the non–active channel.
2. If Channel 1 is active, enter **ping rpg2<CR>** and if Channel 2 is active, enter **ping rpg1<CR>**.
3. If Channel 1 is active, enter **ping lan2<CR>** and if Channel 2 is active, enter **ping lan1<CR>**.
4. MSCF Display link indicator for redundant channel RPG should also be red.
5. MSCF Display link indicator for redundant channel LAN should also be red; however, redundant channel Router link indicator would probably appear OK.

Figure 6–2. RPG Fault Isolation Flowchart (Redundant) (Sheet 24 of 25)

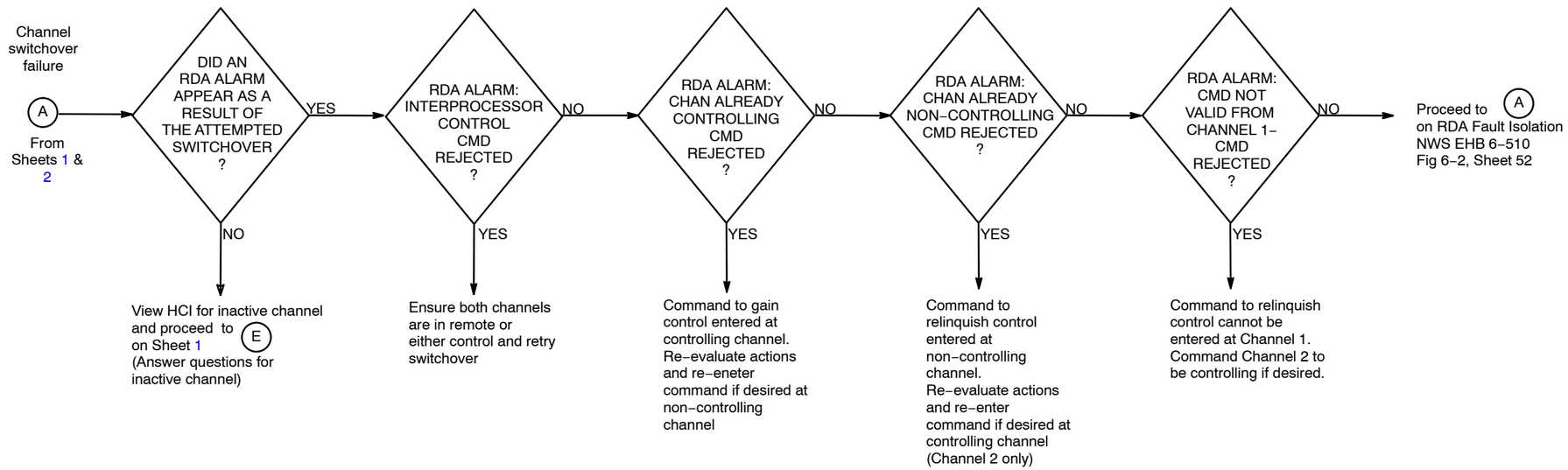

Figure 6–2. RPG Fault Isolation Flowchart (Sheet 25 of 25)

Section 6.4. Secondary Fault Isolation

NOTE

This chapter and its corresponding sections refer to the RPGPCA as UD70. Unless otherwise specified for FAA redundant systems, this information also applies to RPGPCA UD170.

6.4.1 INTRODUCTION.

When primary fault isolation leads to a group of two or more LRUs, the secondary fault isolation procedures are used to isolate faults to a single LRU.

NOTES

Command entries and mouse selections are shown in this section in **bold** type. Variable names are normally shown with a unique font (e.g., *variable_name*). Within a specified command string that must be entered, the variable placeholders are not bold type; however, all portions of the command that are entered exactly as shown are in bold type. The variable placeholder within the command string must be replaced with a name, address, etc. unique to each system and the user is told how to formulate the entry, or directed to where to find this information. Since the keyboard in use may have either an "Enter" key or a "Return" key, the end of the command line is delineated with a **<CR>**. Unless stated otherwise, each command line shown must be "entered" to be processed. Also, directory names/paths shown outside of a command example are *italicized* for clarity purposes.

This section will discuss some graphical manipulations using a mouse. The word "click" indicates a standard left mouse click. When a right click or double–click is required, it is specifically indicated. The symbol ▶ is used to indicate subsequent left clicks through sub–menu selections.

Procedures requiring Sun operating system level Superuser (root) privileges are marked as follows at the right margin:

SU

6.4.2 RPG1.

SU

SCSI cable or SCSI device problem.

Perform the following to isolate the problem:

1. Check connection of SCSI cable at Sun processor end to ensure it's tight. Disconnect SCSI cable from Jaz Drive. Inspect pins on SCSI cable to ensure they are not bent. Reconnect SCSI cable to JAZ drive and ensure that it snaps in place.

2. Repeat SCSI Functionality Check (Figure 6–2 Note 32). If “probe–scsi–all” check still only shows two lines, then the Jaz drive is defective.

3. If “probe–scsi–all” now also shows the Jaz Drive, then problem is corrected. Return to normal operations. If this is the RPG Jaz drive and Archive III was active before problem occurred (NWS only), then reinstall original Archive III disk and restart Auto Archive.

6.4.3 RPG2.

SU

CD–ROM Drive or Sun Processor problem. The initial “probe–ide” should have showed the system hard disk as the first device (“Device 0”).

Perform the following to isolate the problem:

Switch Ultra–ATA channels to verify that problem is not on processor motherboard:

1. At the `ok` prompt, enter **power–off<CR>**, then turn the processor power switch off at rear of unit.

2. Disconnect cables and remove processor from its equipment location if necessary.

3. Open up the processor. Using a static strap, switch the two Ultra–ATA bus cables at J14 and J15 on the motherboard. One bus cable goes to the system hard disk and one goes to the CD–ROM drive.

4. Place processor back in place and reconnect monitor/keyboard cables. Top can be left off temporarily and cables other than for the monitor/keyboard do not need to be connected for this test.

5. Power the processor back on. When the processor starts to boot, press the **Stop** and **A** keys simultaneously to get to an `ok` prompt.

6. Enter **probe–ide<CR>**.

7. If system hard disk is now shown as the third device (“Device 2”) but the CD–ROM is not now seen as the first device (“Device 0”), then the CD–ROM drive is defective. If the CD–ROM drive does now show up as the first device (“Device 0”) but the system hard disk no longer shows up, then the processor motherboard is defective. Replace the processor.

8. At the `ok` prompt, enter **power–off<CR>**, then turn the processor power switch off.

9. Remove processor as necessary. Using static strap, return Ultra–ATA bus cables to their normal location.

10. Replace processor cover. Reinstall processor in its normal location and reconnect all cables.

11. Power the processor back on and allow it to fully boot pending receipt of parts to correct CD–ROM problem.

6.4.4 RPG3.

SU

Monitor or Sun Processor problem (MSCF or RPG with no BDDS installed).

1. If possible, use another workstation within the system (e.g., RPG Workstation within RPGPCA) and telnet into the "suspect" processor. If no other system workstation is available for this test, proceed to step 2. or step 3. as applicable. If able to telnet in, use the "ps –ef" command and verify that normal processes appear to be active. If able to telnet in, then normal processes should be active and it appears the monitor is defective. Perform step 2. or step 3. as applicable to verify if monitor is really bad.

   If not able to telnet in, then it would appear the processor didn't boot and it appears that the processor assembly is defective. However, perform step 2. or step 3. as applicable anyway to verify that the monitor is good.

2. MSCF monitor. Connect the "suspect" monitor in place of the monitor in the RPGPCA cabinet or connect it to an office PC. If monitor is functional after "new" processor is booted, then original Sun processor assembly is defective. If monitor is still blank, then the monitor is defective.

NOTES

When moving the monitor, all processors (Sun or otherwise) should be turned off (and then rebooted) to verify monitor operability.

If this is for an MSCF unit at NWS office, either temporarily use the RPGPCA monitor in place of the MSCF monitor or, in most cases, any standard office PC monitor could be used in place of the MSCF monitor.

3. RPG monitor with no BDDS (FAA only). Connect the "suspect" monitor in place of the RMS monitor. If monitor is functional after "new" processor is booted, then original Sun processor assembly is defective. If monitor is still blank, then the monitor is defective.

NOTES

When moving the monitor, all processors (Sun or otherwise) should be turned off (and then rebooted) to verify monitor operability.

If a monitor problem exists on the RPG workstation, it's not critical (pending receipt of new monitor) since the RPG processor assembly will function OK without a monitor.

6.4.5 RPG4.

Floppy Drive or Sun processor problem.

Perform the following to isolate the problem:

Verify cable connectivity to floppy drive. Verify power (+5 vdc, +12 vdc) at end of floppy power cable (+ 5 vdc yellow/black; +12 vdc orange/black). Replace processor if bad. If the test output indicates "`MESSAGE='ERROR: Track 0 not reported`" or ="`ERROR: Recalibrate failed. Floppy missing, improperly connected, or defective`", then replace the floppy drive. Otherwise, replace the processor.

6.4.6 RPG5.

SU

Hard Drive or Sun processor problem. The initial "probe–ide" should have showed the CD–ROM drive as the third device ("Device 2").

Perform the following to isolate the problem:

Switch Ultra–ATA channels to verify that problem is not on processor motherboard:

1. At the `ok` prompt, enter **power–off<CR>**, then turn the processor power switch off at rear of unit.
2. Disconnect cables and remove processor from its equipment location if necessary.
3. Open up the processor. Using a static strap, switch the two Ultra–ATA bus cables at J14 and J15 on the motherboard. One bus cable goes to the system hard disk and one goes to the CD–ROM drive.
4. Place processor back in place and reconnect monitor/keyboard cables. Top can be left off temporarily and cables other than for the monitor/keyboard do not need to be connected for this test.
5. Power the processor back on. When the processor starts to boot, press the **Stop** and **A** keys simultaneously to get to an `ok` prompt.
6. Enter **probe–ide<CR>**.
7. If the CD–ROM is now shown as the first device ("Device 0") but the hard disk is not now seen as the third device ("Device 2"), then the hard disk is defective. If the hard disk does now show up as the third device ("Device 2") but the CD–ROM drive no longer shows up, then the processor motherboard is defective. Replace the processor.
8. At the `ok` prompt, enter **power–off<CR>**, then turn the processor power switch off.
9. Remove processor as necessary. Using static strap, return Ultra–ATA bus cables to their normal location.

10. Replace processor cover.

6.4.7 RPG6.

MSCF modem, cable, or MSCF processor problem.

Perform the following to isolate the problem:

1. Use DB9(F) – DB25(M) serial cable (supplied fixture) to connect MSCF modem to MSCF processor serial port B. If modem TR light comes on, proceed to step 4. If no serial cable is available, take modem to RPG and connect AC power cord. Observe RPG dedicated modems to find an active dedicated modem (TR light on) and connect its DTE cable to MSCF modem. If modem TR light comes on, proceed to step 4.
2. If modem TR light does not come on, accomplish modem setup procedure IAW paragraph 6.6.21.
3. If modem TR light now comes on, reconnect modem in normal configuration and resume normal operations. If modem TR light still does not come on, replace defective modem UD71A5. This procedure is complete.
4. Reconnect modem in normal configuration and reload MSCF software IAW Table 4–54. While MSCF software loads, accomplish modem setup procedure IAW paragraph 6.6.21.
5. After MSCF boots, log into CDE and at a normal terminal window, enter **ping –s rtr<CR>** (or **ping –s rtr2<CR>** if Channel 2 was active).
6. If the modem TR light is now lit and normal ping responses are received, resume normal operations. If not, verify continuity of cable 71W221. If cable appears good, replace defective MSCF processor UD71A1.

6.4.8 RPG7.

LAN Switch UD70/170A13 (VLAN 1 ports) or cable problem. The following is a list of possible used VLAN 1 switch ports and an associated cable number if a cable is connected to that port. Not all ports listed are used in all configurations.

Port	Cable	Used in Configurations:
1	70/170W201	All
2	70/170W202, W332	NWS
3	70/170W203	All
4	70/170W204	NWS and DoD
6	70/170W206	All

7	70/170W207, W113	FAA
8	70/170W208	All
9	70/170W209	All
10	70/170W210	FAA
11	70/170W211	FAA

Ports 12 through 16 (NWS and DoD only) are discussed in secondary fault isolation procedure RPG8. Ports 17 through 19 are discussed in secondary fault isolation procedure RPG10 (Comm Server problems).

Perform the following to isolate the problem:

NOTE

If the "bad port" is port 7 (FAA redundant RPG–to–RPG link), then the following troubleshooting steps should be done at both the UD70A13 and UD170A13 LAN switches.

1. Disconnect the cable from the "suspect" port and reconnect it. If a green link light is not observed, proceed to step 4.
2. Reaccomplish the "failed" check from the troubleshooting flowcharts that indicated the problem in the first place. These checks could have been any of the following:
   a. A "ping" to the device that is connected to that port to see if a "*device* is alive" message is received.
   b. Noting the status on the Comms Status function of the MSCF Display window to see if the link is "up" (green link). If the Comms Status for the "Cisco Switch" was already open, click the Update button to retrieve new status.
   c. If the problem was with a link to a Sun processor, the problem may have been noted by an hme0 "link down" message at reboot time. If the connection is now restored, an associated "link up" message will be noted in the Sun's Console window.
3. If the step 2. check indicates the link is now good, this procedure is complete –– resume normal operations. If not, proceed with fault isolation.
4. Disconnect the cable from the "suspect" port and reconnect it to port 24. If a green link light is not observed, reconnect the cable to original port and proceed to step 7.
5. Reaccomplish the "failed" check from the troubleshooting flowcharts that indicated the problem in the first place. These checks could have been any of the following:
   a. A "ping" to the device that is connected to that port to see if a "*device* is alive" message is received.

b. Noting the status on the Comms Status function of the MSCF Display window to see if the link is “up” (green link). If the Comms Status for the “Cisco Switch” was already open, click the Update button to retrieve new status. At this point, verify status on Link 24.

c. If the problem was with a link to a Sun processor, the problem may have been noted by an hme0 “link down” message. If the connection is now restored, an associated “link up” message will be noted in the Sun’s Console window.

6. If the step 5. check indicates the link was still not functional, proceed to the next step. If the step 5. check indicates the link is now good, then there is a problem with the original port on the LAN switch. Perform the setup procedure IAW paragraph 6.6.10. and recheck the link functionality (see step 2. or 5. above) with the cable connected on its original port. If it is still defective, the LAN switch is defective. Pending replacement of the LAN switch, port 24 can be used temporarily in place of the failed port.

CAUTION

The next step will disrupt full system operations. If this procedure is being performed to troubleshoot a non−critical link (e.g., a BDDS link) and system operations can not be disrupted at this time, then delay further action at this point.

7. Check if the System light is lit solid green on the front of the LAN switch and if the other links specified above for a given configuration appear to be functioning (green link lights). If so, proceed to step 8. If not, power the LAN switch off/on to reboot it. After about 1 minute, check if the System light is lit solid green on the front of the LAN switch and if the other links specified above for a given configuration appear to be functioning (green link lights). If the System light is not lit solid green or no links appear to be functional, the LAN switch appears to be defective and it should be replaced. If some links appear functional (green link lights) while one or more of the other links show amber link lights, proceed to step 12. If only the original “suspect” link is still non−functional, continue with the next step.

NOTE

For steps 8. through 11., if the “bad port” is port 2 (NWS only printer link), then check external cable W332 along with cable 70/170W202. If the “bad port” is port 7 (FAA redundant RPG−to−RPG link), then check external cabinet−to−cabinet cable W113 along with cables 70W207 and 170W207.

8. Use the ethernet cable checker (if available) to verify if the cable is good. If a cable checker is not available, proceed to the next step. If it checks good, reconnect it to its original port and proceed to step 12. If it checks bad, replace it with a known good cable. This procedure is complete −− resume normal operations.

9. If a cable checker is not available, use a spare cable or a known good cable to recable the failed link to its original LAN switch port.

10. Reaccomplish the "failed" check from the troubleshooting flowcharts that indicated the problem in the first place. These checks could have been any of the following:

    a. A "ping" to the device that is connected to that port to see if a "*device* is alive" message is received.

    b. Noting the status on the Comms Status function of the MSCF Display window to see if the link is "up" (green link). If the Comms Status for the "Cisco Switch" was already open, click the Update button to retrieve new status.

    c. If the problem was with a link to a Sun processor, the problem may have been noted by an hme0 "link down" message. If the connection is now restored, an associated "link up" message will be noted in the Sun's Console window.

11. If the step 10. check indicates the link is now good, then the original cable was defective. This procedure is complete −− resume normal operations. If the step 10. check indicates the link was still not functional, continue on with fault isolation.

CAUTION

The next step will disrupt full system operations. If this procedure is being performed to troubleshoot a non−critical link (e.g., a BDDS link) and system operations can not be disrupted at this time, then delay further action at this point.

12. Perform the LAN switch setup procedure IAW paragraph 6.6.10.

13. Reaccomplish the "failed" check from the troubleshooting flowcharts that indicated the problem in the first place. These checks could have been any of the following:

    a. A "ping" to the device that is connected to that port to see if a "*device* is alive" message is received.

    b. Noting the status on the Comms Status function of the MSCF Display window to see if the link is "up" (green link). If the Comms Status for the "Cisco Switch" was already open, click the Update button to retrieve new status.

    c. If the problem was with a link to a Sun processor, the problem may have been noted by an hme0 "link down" message. If the connection is now restored, an associated "link up" message will be noted in the Sun's Console window.

14. If the step 13. check indicates the link is now good, then the original LAN switch configuration was corrupted. This procedure is complete −− resume normal operations. If the step 13. check indicates the link was still not functional, the LAN switch is defective.

6.4.9 RPG8.

LAN Switch UD70/170A13 (VLAN 2 ports) or cable problem. The following is a list of possible used VLAN 2 switch ports (BDDS output) and an associated cable number to that port. Even though all ports have cables connected, ports 13 through 16 may not actually be in–use unless there is an actual BDDS client connection to the cabinet I/O panel.

Port	Cable	Used in Configurations:
12	70/170W212	If BDDS installed in Cabinet
13	70/170W213	If BDDS installed in Cabinet & BDDS client connected to CP2
14	70/170W214	If BDDS installed in Cabinet & BDDS client connected to CP3
15	70/170W215	If BDDS installed in Cabinet & BDDS client connected to CP4
16	70/170W216	If BDDS installed in Cabinet & BDDS client connected to CP5

Perform the following to isolate the problem:

1. Disconnect the cable from the "suspect" port and reconnect it. If a green link light is not observed, proceed to step 4.
2. Reaccomplish the "failed" check from the troubleshooting flowcharts that indicated the problem in the first place. These checks could have been any of the following:
   a. A "ping" to the device that is connected to that port to see if a "*device* is alive" message is received.
   b. Noting the status on the Comms Status function of the MSCF Display window to see if the link is "up" (green link). If the Comms Status for the "Cisco Switch" was already open, click the Update button to retrieve new status.
   c. If the problem was with a link from the Sun BDDS processor, the problem may have been noted by an hme1 "link down" message. If the connection is now restored, an associated "link up" message will be noted in the Sun's Console window.
3. If the step 2. check indicates the link is now good, this procedure is complete –– resume normal operations. If not, proceed with fault isolation.
4. Disconnect the cable from the "suspect" port and reconnect it to one of the other ports in this group. This may require that the cable currently connected on that port be disconnected. If a green link light is not observed, reconnect the cable to original port and proceed to step 7.
5. Reaccomplish the "failed" check from the troubleshooting flowcharts that indicated the problem in the first place. These checks could have been any of the following:

a. A “ping” to the device that is connected to that port to see if a “*device* is alive” message is received.

b. Noting the status on the Comms Status function of the MSCF Display window to see if the link is “up” (green link). If the Comms Status for the “Cisco Switch” was already open, click the Update button to retrieve new status. At this point, verify status on link associated with the port to which the cable was connected.

c. If the problem was with a link from the Sun BDDS processor, the problem may have been noted by an hme1 “link down” message. If the connection is now restored, an associated “link up” message will be noted in the Sun’s Console window.

6. If the step 5. check indicates the link was still not functional, proceed to the next step. If the step 5. check indicates the link is now good, then there is a problem with the original port on the LAN switch. Perform the setup procedure IAW paragraph 6.6.10. and recheck the link functionality (see step 2. or 5. above) with the cable connected on its original port. If it is still defective, the LAN switch is defective. Pending replacement of the LAN switch, determine if one of the BDDS Client ports is normally not in use and use that port in place of the failed port. If all client ports were really active prior to this problem, one client link will need to remain down pending receipt of a new LAN switch. For any client to receive data, it is critical that the original BDDS data output link from the BDDS processor to the LAN switch (original port 12) be functional.

CAUTION

The next step will disrupt full system operations. If this procedure is being performed to troubleshoot a non–critical link (e.g., a BDDS link) and system operations can not be disrupted at this time, then delay further action at this point.

7. Check if the System light is lit solid green on the front of the LAN switch and if the other links specified above for a given configuration (see RPG7, paragraph 6.4.8 also) appear to be functioning (green link lights). If so, proceed to step 8. If not, power the LAN switch off/on to reboot it. After about 1 minute, check if the System light is lit solid green on the front of the LAN switch and if the other links specified above for a given configuration appear to be functioning (green link lights). If the System light is not lit solid green or no links appear to be functional, the LAN switch appears to be defective and it should be replaced. If some links appear functional (green link lights) while one or more of the other links show amber link lights, proceed to step 12. If only the original “suspect” link is still non–functional, continue with the next step.

8. Use the ethernet cable checker (if available) to verify if the cable is good. If a cable checker is not available, proceed to the next step. If it checks good, reconnect it to

its original port and proceed to step 12. If it checks bad, replace it with a known good cable. This procedure is complete –– resume normal operations.

9. If a cable checker is not available, use a spare cable or know good cable to recable the failed link to its original LAN switch port.

10. Reaccomplish the "failed" check from the troubleshooting flowcharts that indicated the problem in the first place. These checks could have been any of the following:

    a. A "ping" to the device that is connected to that port to see if a "*device* is alive" message is received.

    b. Noting the status on the Comms Status function of the MSCF Display window to see if the link is "up" (green link). If the Comms Status for the "Cisco Switch" was already open, click the Update button to retrieve new status.

    c. If the problem was with a link from the Sun BDDS processor, the problem may have been noted by an hme1 "link down" message. If the connection is now restored, an associated "link up" message will be noted in the Sun's Console window.

11. If the step 10. check indicates the link is now good, then the original cable was defective. This procedure is complete –– resume normal operations. If the step 10. check indicates the link was still not functional, continue on with fault isolation.

CAUTION

The next step will disrupt full system operations. If this procedure is being performed to troubleshoot a non–critical link (e.g., a BDDS link) and system operations can not be disrupted at this time, then delay further action at this point.

12. Perform the LAN switch setup procedure IAW paragraph 6.6.10.

13. Reaccomplish the "failed" check from the troubleshooting flowcharts that indicated the problem in the first place. These checks could have been any of the following:

    a. A "ping" to the device that is connected to that port to see if a "*device* is alive" message is received.

    b. Noting the status on the Comms Status function of the MSCF Display window to see if the link is "up" (green link). If the Comms Status for the "Cisco Switch" was already open, click the Update button to retrieve new status.

    c. If the problem was with a link from the Sun BDDS processor, the problem may have been noted by an hme1 "link down" message. If the connection is now restored, an associated "link up" message will be noted in the Sun's Console window.

14. If the step 13. check indicates the link is now good, then the original LAN switch configuration was corrupted. This procedure is complete –– resume normal operations. If the step 13. check indicates the link was still not functional, the LAN switch is defective.

6.4.10 RPG9.

RPG's MSCF Link Modem UD70/170A14A21 or Router Serial Module UD70/170A2A1A2 problem.

At this point, it is assumed that the RPG's MSCF link modem A14A21 still shows a good physical link to the MSCF workstation end (V34 33.6) and that only the CN/LP light is missing on serial port 0 of the router serial card A2A1A2 (May also be indicated by lack of a "TR" light on the modem). Perform the following to isolate the problem:

1. If this is DoD system, proceed to step 2. For FAA systems, temporarily exchange the A14A21 modem between this channel (still the "active" channel and the inactive channel. Observe serial port 0 of the router serial card A2A1A2 to see if the CN/LP light is now on. If so, original modem is defective (A14A21). If not, router serial module is defective (A2A1A2). In either case, leave defective part in inactive channel pending receipt of new parts.

2. For a DoD system, temporarily disconnect the DTE cable from the A14A21 modem and connect it to any normal product distribution dedicated modem (slots 6 through 19) that shows a Data 14.4 connection. Observe serial port 0 of the router serial card A2A1A2 to see if the CN/LP light is now on. If so, original modem is defective (A14A21). If not, router serial module is defective (A2A1A2). Reconnect cables as normal pending receipt of parts.

6.4.11 RPG10.

Communication Server UD70/170A15, A16, or A17; LAN Switch UD70/170A13 (ports 17, 18, or 19); or cable problem. The Comm Servers will not activate their network layer (to allow a basic "ping" test) until they are fully booted and a box would not be able to boot if it had a network connectivity problem. This procedure will isolate the problem to the box or the network connection. If the problem is with the network connection, the following is a list of possible used switch ports and an associated cable number.

Port	Cable	Used for Comm Server:
17	70/170W217	70/170A15
18	70/170W218	70/170A16
19	70/170W219	70/170A17

Perform the following to isolate the problem:

1. Reverify the “bad” box by pinging all three Comm servers in this channel to see which one does not respond (enter **<Ctrl> C** to stop ping):

   Single Channel or FAA Redundant Channel 1:
   ping –s mps1a<CR>
   ping –s mps1b<CR>
   ping –s mps1c<CR>

   FAA Redundant Channel 2:
   ping –s mps2a<CR>
   ping –s mps2b<CR>
   ping –s mps2c<CR>

2. Observe the front panel on all three MPS800 servers. If the network connection is working OK, the `FDX`, `LINK`, and `100 BASET` LEDs will all be lit. If these lights are all lit on the “suspect” box, proceed to step 7. (network connection appears OK). If not, then a network connectivity problem exists. Continue with the next step.

3. Disconnect the cable for the “suspect” box from its LAN switch port (17, 18, or 19) and then reconnect it. If the three LEDs on the front of the “suspect” box are still not lit, continue with the next step. If the three LEDs on the front of the “suspect” box are now lit, the problem appears to be corrected. Turn the box power off/on to reboot the box. Wait approximately 45 seconds and then repeat step 1. to verify if the problem is corrected. If it is, this procedure is complete. If the one box still does not respond, proceed to step 7.

4. At the rear of the three MPS800 servers, swap the Ethernet LAN cable at the “TX” port of the “suspect” box with that of a box that is working correctly. Observe the front panel of the “suspect” server. If the `FDX`, `LINK`, and `100 BASET` LEDs are still not lit, the MPS800 server is defective and requires replacement. If the three LEDs are now lit, then a problem exists with the original LAN Switch port or Ethernet cable. At the rear of the servers, return the Ethernet cables to their original configuration and continue with the next step.

5. Disconnect the cable from the “suspect” port and reconnect it to one of the two ports for the working servers. If the `FDX`, `LINK`, and `100 BASET` LEDs are still not lit, the original Ethernet cable for the failed server is defective and requires replacement. If they are now lit, then the original LAN switch port is defective or not configured correctly. Return all cables to their original configuration and continue with the next step.

CAUTION

The next step will disrupt full system operations. If this procedure is being performed to troubleshoot non–critical product distribution links (e.g., dial–in) and dedicated links can not be disrupted at this time, then delay further action at this point.

6. Perform the LAN Switch setup procedure IAW paragraph 6.6.10 and recheck the `FDX`, `LINK`, and `100 BASET` LEDs of the “suspect” box. If they are still not lit, the LAN switch is defective. Pending replacement of the LAN switch, port 24 can

be used temporarily in place of the failed port. If they are now lit, completion of the setup procedure corrected the problem. In either case, this procedure is complete.

7. Perform the Communication Server setup procedure IAW paragraph 6.6.18 for the "suspect" box. When the setup procedure is completed, verify that the box does boot correctly as indicated in step 37. of paragraph 6.6.18.3 and that it can then be pinged (see step 1. above). If the box will not boot correctly or still can not be pinged after it boots, then it is defective and should be replaced.

6.4.12 RPG11.

Troubleshooting Color Printer Problems. This section will provide the cross–reference into Tektronix/Xerox–supplied documentation for troubleshooting color printer media jam problems, print quality problems, and error codes displayed on the front panel. It also provides the cross–reference into applicable Remove and Replace procedures for parts identified to be defective through troubleshooting or for which replacement is indicated based on time/usage end–of–life criteria (front panel messages).

Table 6–4 provides the references to the User Guide hard copy (TEK part number 071–0632) and to user manuals and videos which exist on the Phaser 750 Laser Printer Software CD–ROM (TEK part number 063–3295). For the User Guide references, the applicable section tab name is shown. For the CD references, the hyper–linked path to the applicable information is shown.

Table 6–4. Color Printer Documentation Cross–Reference

Problem or Action Required	User Guide Reference	CD User Manuals Reference	CD Videos
Error Code Displayed		User Manuals & Videos alphabetical index error codes	
Clearing Media Jams	Jams	User Manuals & Videos topic list Media Jams	User Manuals & Videos videos Clearing Jams Video
Frequent Media Jams		User Manuals & Videos alphabetical index Go to "media jams" avoiding	
Print Quality Problems	Print Quality	User Manuals & Videos topic list Troubleshooting Troubleshooting Print Quality	

Table 6–4. Color Printer Documentation Cross–Reference – Continued

Problem or Action Required	User Guide Reference	CD User Manuals Reference	CD Videos
Remove and Replace Procedures:			
Toner Cartridges		User Manuals & Videos printable documents Consumable Replacement Instructions Toner Cartridge (PDF page 719)	User Manuals & Videos videos Toner Replacement Video
Imaging Unit		User Manuals & Videos printable documents Consumable Replacement Instructions Imaging Unit (PDF pages 720 and 721)	User Manuals & Videos videos Imaging Unit Replacement Video
Fuser Kit		User Manuals & Videos printable documents Consumable Replacement Instructions Fuser Roll (PDF pages 724 and 725)	User Manuals & Videos videos Fuser Kit Replacement Video
Fuser		User Manuals & Videos printable documents Consumable Replacement Instructions Fuser (PDF pages 728 and 729)	

Table 6–4. Color Printer Documentation Cross–Reference – Continued

Problem or Action Required	User Guide Reference	CD User Manuals Reference	CD Videos
Transfer Roll		User Manuals & Videos printable documents Consumable Replacement Instructions Transfer Kit (PDF pages 730 and 731)	User Manuals & Videos videos Transfer Roll Replacement Video
Main Charge Grid		User Manuals & Videos printable documents Consumable Replacement Instructions Main Charge Grid (PDF page 734)	

6.4.13 RPG12.

Table 6–5 provides a description of which relay is related to what function.

Table 6–5. Relay Function Map

Product Distribution Comms Status Line #	Function	Relay No.
9	1st Leased Line	K56
10	2nd Leased Line	K1
11	3rd Leased Line	K2
12	4th Leased Line	K3
13	5th Leased Line	K4
14	6th Leased Line	K5
15	7th Leased Line	K6
16	8th Leased Line	K7
17	9th Leased Line	K8
18	10th Leased Line	K9
19	11th Leased Line	K10
20	12th Leased Line	K11

Table 6–5. Relay Function Map – Continued

Product Distribution Comms Status Line #	Function	Relay No.
33	13th Leased Line	K24
34	14th Leased Line	K25
35	15th Leased Line	K26
36	16th Leased Line	K27
	17th Leased Line (MSCF)	K28
1 & 2	1st & 2nd Dial Lines	K12
3 & 4	3rd & 4th Dial Lines	K13
5 & 38	5th & 6th Dial Lines	K14
39 & 40	7th & 8th Dial Lines	K15
	Distant MSCF	K54
	DIO Control (Relay Switchover)	K55

Section 6.5. Replacement Procedures

NOTE

This chapter and its corresponding sections refer to the RPGPCA as UD70. Unless otherwise specified for FAA redundant systems, this information also applies to RPGPCA UD170.

6.5.1 INTRODUCTION.

This section provides instructions and data for the replacement of those WSR–88D assemblies which require special handling or setup procedures. The procedures are organized by reference designation numbers type. Table 6–6 provides an index to identify the replacement procedures that must be performed when a given assembly is to be replaced. Figure 1–3 through Figure 1–5 in Section 1.1 are provided for quick reference to locate assemblies within the RPGPCA cabinet, the Remote RDA Maintenance Terminal, and the MSCF Workstation. The great majority of WSR–88D assemblies are either stand–alone, plug–in, or rack–mounted modules which do not require special replacement instructions. Visual inspection and reference to cabinet layout/interconnection drawings to determine access requirements, cable connections, and fastening hardware suffice for most assemblies. There are three types of assemblies for which special procedures are required. These include certain electro–mechanical assemblies, printed circuit cards, and peripheral communications devices. Each of these types is defined in the following paragraphs. For exact parts location identification and part number ordering data, refer to the IPB, NWS EHB 6–501.

6.5.1.1 Printed Circuit Cards. Many of the printed circuit cards in the WSR–88D digital processors require removal or installation of jumpers (straps) before they are installed into the WSR–88D equipment. Many cards require the proper setting of miniature built–in switches before they are installed. These switches are either rotary, rocker, or DIP switches. The reason for this requirement is that many of the cards are standard off–the–shelf card assemblies which can function in several different modes or configurations. They must be configured for their specific WSR–88D application at the time of installation. This section provides tables for determining the proper strap/switch setting for each unique card location and includes card layout figure for positive identification of straps/switches.

NOTE

All straps not defined in this section must be left in the original configuration as received from the factory/spares depot.

6.5.1.2 Universal Communication Devices. Most of the communications devices used in the WSR–88D equipment (modems, STATMUX, modem eliminator) are universal RS–232 devices capable of operating in a wide variety of applications. Special jumper/switch settings are required to define the operating modes and data transfer protocols. Instructions to accomplish the correct setup for the WSR–88D applications are referenced in the applicable replacement procedure.

Table 6–6. RPG LRU Replacement Procedure Index

Reference Designation	Name **Relay Box Assembly**	Replacement Paragraph
UD31A1–A2	Relay Driver Circuit	6.5.3
UD31K1–K60	Relay Box Relays	6.5.4
Reference Designation	**Name** **Remote RDA Maintenance Terminal**	**Replacement Paragraph**
UD32A9/A10	CPU/Monitor	6.5.5
UD32A2	Dual A/B Switch	6.5.6
UD32A3	STATMUX (Penril VCX–150)	6.5.7
UD32A4	Dedicated/Dial Port Modem Stand Alone (Codex 326x)	6.5.8
Reference Designation	**Name** **RPGPCA**	**Replacement Paragraph**
UD70A1*	BDDS Processor Assembly (Sun Ultra 5 with PCI card)	6.5.9
UD70A1A1*	Sun Ultra 5 without PCI card	**
UD70A1A1A2	BDDS Floppy Drive (Sun Ultra 5)	6.5.42
UD70A1A1A3	BDDS CD–ROM Drive (Sun Ultra 5)	6.5.43
UD70A1A1A4	BDDS Hard Drive (Sun Ultra 5)	6.5.44
UD70A2	Router Assembly (Cisco 3640)	6.5.10
UD70A3*	KVM Switch (Raritan)	6.5.11
UD70A4	RPG 17–Inch Monitor (Sun)	6.5.12
UD70A5	RPG Keyboard (Sun)	6.5.13
UD70A6	RPG Mouse (Sun)	6.5.14
UD70A7	RPG Processor Assembly (Sun Ultra 10 with PCI cards)	6.5.15
UD70A7A1	Sun Ultra 10 without PCI cards	**
UD70A7A1A2	RPG Floppy Drive (Sun Ultra 10)	6.5.16
UD70A7A1A3	RPG CD–ROM Drive (Sun Ultra 10)	6.5.17
UD70A7A1A4	RPG Hard Disk (Sun Ultra 10)	6.5.18

* Site dependent
** For reference only. Item must be ordered and replaced as an assembly.

Table 6–6. RPG LRU Replacement Procedure Index – Continued

Reference Designation	Name RPGPCA	Replacement Paragraph
UD70A8 and UD70A9*	Archive Storage Device (Iomega Jaz)	6.5.19
UD70A10	Power Administrator Unit (APC MasterSwitch)	6.5.20
UD70A11	UPS Assembly (APC 1400) with AP9606 Web/ SNMP Management Card	6.5.21
UD70A11A1	UPS (APC 1400) without AP9606 Web/SNMP Management Card	**
UD70A11A2	UPS AP9606 Web/SNMP Management Card	6.5.22
UD70A11A1BT1	UPS Battery Module (APC RPC24)	6.5.23
UD70A12	RDA/RPG Gateway (Polycom 505–0081)	6.5.24
UD70A13	LAN Switch (Cisco 2924)	6.5.25
UD70A14A1–A21	Dial and Dedicated Port Modems (Codex 3262 and 3263)	6.5.26
UD70A14B1	Dedicated/Dial Modem Rack (Codex 326x) Fan Module	6.5.27
UD70A14PS1 and PS2	Dedicated/Dial Modem Rack (Codex 326x) Power Supplies	6.5.27
UD70A15, UD70A16, and UD70A17	Communication Server (PTI MPS 800)	6.5.28
UD70A18*	CSU	6.5.29
UD70A19*	Short Haul Modem	6.5.30
UD70A20*	RS232/422 Converter	6.5.31
UD70A22	AC Power Distribution Panel	6.5.32
UD70A23	Dial Patch Panel	6.5.33
UD70A24	Dial Adapter Panel	6.5.34
UD70A25	Dedicated Adapter Panel	6.5.35
UD70A26	Dedicated Patch Panel	6.5.36
UD70A27	Dedicated Patch Panel	6.5.37
UD70A28* and UD70A29*	RMS Power Administrator (Baytech RPC–5)	6.5.38

* Site dependent
** For reference only. Item must be ordered and replaced as an assembly.

Table 6–6. RPG LRU Replacement Procedure Index – Continued

Reference Designation	Name **RPGPCA**	Replacement Paragraph
UD70FL1	Power Filter	6.5.39
UD70PS1*	Relay Box Power Supply	6.5.40
Reference Designation	**Name** **MSCF Workstation**	**Replacement Paragraph**
UD71A1	MSCF Processor Assembly (Sun Ultra 5 with PCI cards)	6.5.41
UD71A1A1	Sun Ultra 5 without PCI cards	**
UD71A1A1A2	MSCF Floppy Drive (Sun Ultra 5)	6.5.42
UD71A1A1A3	MSCF CD–ROM Drive (Sun Ultra 5)	6.5.43
UD71A1A1A4	MSCF Hard Disk (Sun Ultra 5)	6.5.44
UD71A2	MSCF 21–Inch Monitor (Sun)	6.5.45
UD71A3	MSCF Keyboard (Sun)	6.5.46
UD71A4	MSCF Mouse (Sun)	6.5.47
UD71A5*	MSCF Stand Alone Modem (Codex 3261 FAST)	6.5.48
UD71A6	MSCF Backup Storage Device (Iomega Jaz)	6.5.49
UD71E1	MSCF Surge Suppressor	6.5.50
UD75	Frame Relay Hub Router	6.5.51
Reference Designation	**Name** **Printer Workstation**	**Replacement Paragraph**
UD79A1	MSCF Color Printer (Xerox/Tektronix Phaser 750)	6.5.52

* Site dependent
** For reference only. Item must be ordered and replaced as an assembly.

6.5.2 SPECIAL CONSIDERATIONS FOR REPLACEMENT PROCEDURES.

Whenever a part or assembly is to be replaced, the following general considerations apply:

6.5.2.1 Safety. Always read the text and procedures and note the safety cautions provided. Do not attempt to bypass or circumvent instructions and features provided for the safety of personnel or the protection of the equipment.

6.5.2.2 Software Shutdown. A software shutdown is applicable when it is necessary to stop the application software prior to a removal and replacement procedure. When a software shutdown is necessary, it is written in the removal and replacement procedure.

6.5.2.3 Power Turn−off. Always de−energize equipment before connecting/disconnecting, or removing/installing components. Follow the appropriate equipment shutdown procedure as provided within each removal and replacement procedure.

6.5.2.4 Labeling. When a piece of equipment has to be replaced, prior to disconnecting any cables, label the cables. Noting on the label which connector the cables are to be attached. This way the cables can be re−installed correctly onto the new equipment.

6.5.2.5 Inspection. When a new or replacement component is to be installed in the equipment, first verify it is the correct part by checking part numbers against the parts list. Then inspect for physical damage. Attempted installation of an incorrect part (or into the wrong location), can cause equipment damage.

6.5.2.6 Related Procedures. The replacement of certain components require a setup procedure or initialization to be done. This is referenced as one of the last steps of a replacement procedure.

6.5.2.7 Handling of Electrostatic Sensitive Devices. All WSR−88D internal LRU components are an ESD and must be handled using the special ESD handling procedures given below. An ESD Component Handling Kit (conductive mat and wrist strap) and a suitable conductive bag are required to provide proper component protection. Use the following procedure as applicable.

****ESD** CAUTION **ESD****

The ESD symbol establishes the requirement that all paragraphs/steps, figures with illustrations and diagrams identified by ** ESD ** must be followed as written and according to ESD device handling procedures.

6.5.2.7.1 Internal Component Removal/Installation. Follow these steps.

1. Remove all power to equipment.
2. Put ESD wrist strap on bare wrist and connect clip lead to to chassis frame or proper ground.
3. Have a conductive bag ready.
4. Remove the component and place into the conductive bag.
5. Remove new card from its conductive package and install.
6. Disconnect ESD wrist strap and return system to normal operation.

6.5.2.7.2 ESD DIP Switch Setting. Follow these steps.

1. Place ESD conductive mat upon work surface and connect clip lead to to chassis frame or proper ground.
2. Put ESD wrist strap on bare wrist and connect clip lead to chassis frame.
3. Remove new circuit card from its conductive package and place circuit card onto grounded conductive mat.

4. Set DIP switches for correct setting.
5. Install circuit card in proper slot.
6. Remove ESD wrist strap.
7. Disconnect wrist strap and conductive mat clip leads from ground.

6.5.3 RELAY DRIVER CIRCUITS UD31A1, A2 REPLACEMENT PROCEDURE.

One technician is required for this procedure.

6.5.3.1 Equipment and Tools Required.

1. Screwdriver set, Phillips–tip
2. Screwdriver set, flat–tip
3. ESD Component Handling Kit

6.5.3.2 Initial Conditions/Preliminary Setup.

1. Unplug the UD70/170PS1 Power Supply cord 70/170W150 from the Power Strip UD70/170J23 in both RPGPCA cabinets.
2. Locate the Relay Box UD31 on wall inside shelter UD1.

6.5.3.3 Replacement Procedure. (See Figure 6–3 for detailed illustration.)

1. Loosen nine captive screws holding the front door of relay box in place.
2. Swing out front door of relay box.
3. Loosen two captive screws securing relay inner door. Swing out door.

ESD **CAUTION** **ESD**

All WSR–88D printed circuit boards are electrostatic sensitive devices which require special handling. Refer to paragraph 6.5.2.7.

4. Unscrew two Phillips–tip screws securing connector to either A1 or A2. Remove respective connector.
5. Unscrew four Phillips–tip screws holding A1 or A2 relay driver circuit board to standoffs on relay box back panel.
6. Remove A1 or A2 relay driver circuit board.
7. Reverse steps 1 through 6 to install the new circuit board.
8. Plug the UD70/170PS1 Power Supply cord 70/170W150 into the Power Strip UD70/170J23 in both RPGPCA cabinets.

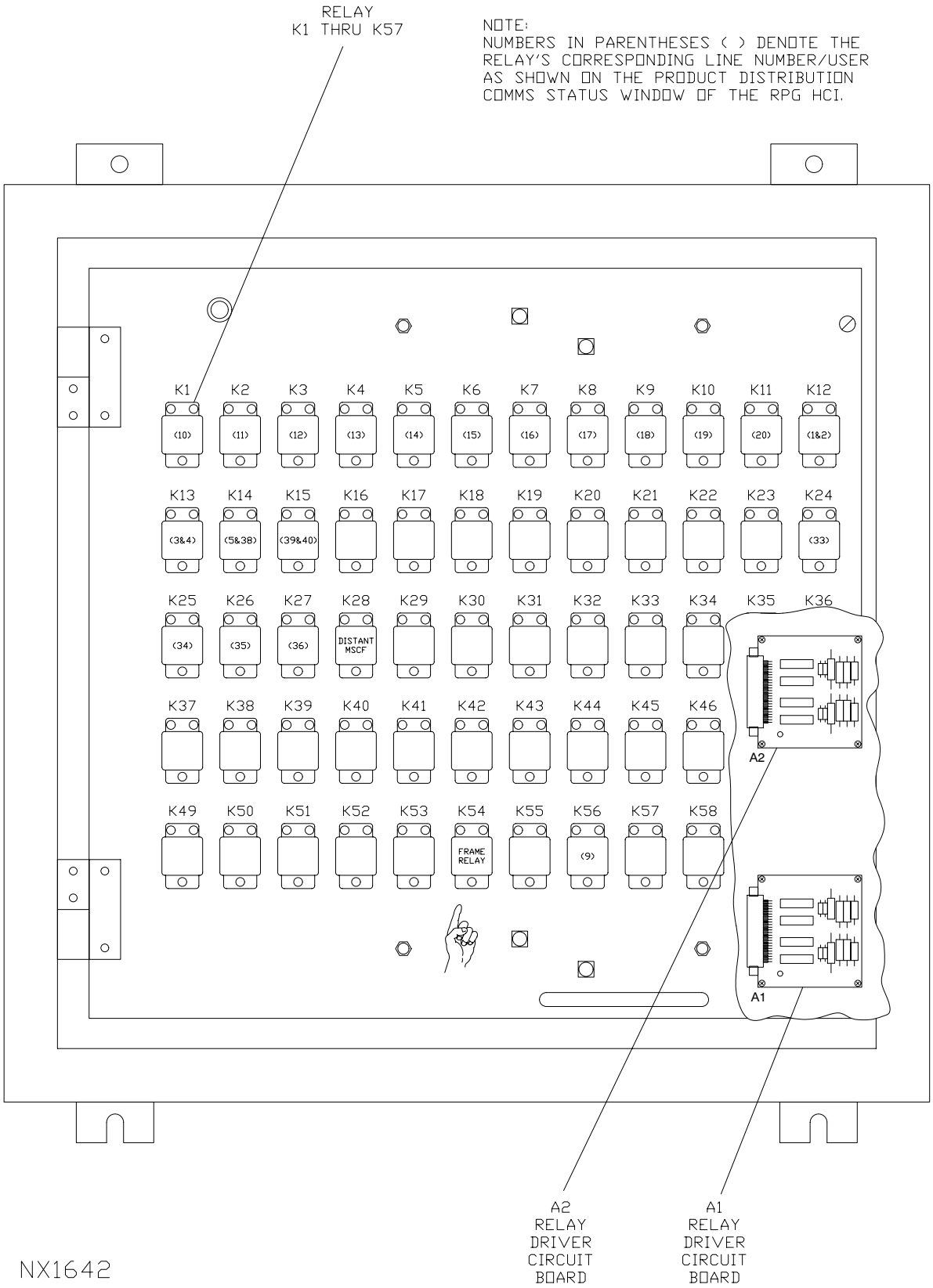

Figure 6–3. Relay Box UD31

6.5.4 RELAY BOX RELAYS UD31K1–K60 REPLACEMENT PROCEDURE.

One technician is required for this procedure.

6.5.4.1 Equipment and Tools Required.

1. Screwdriver set, Phillips–tip
2. Screwdriver set, flat–tip
3. Nut driver set

6.5.4.2 Initial Conditions/Preliminary Setup.

1. Unplug the UD70/170PS1 Power Supply cord 70/170W150 from the Power Strip UD70/170J23 in both RPGPCA cabinets.
2. Locate the Relay Box UD31 on wall inside shelter UD1.

6.5.4.3 Replacement Procedure. (See Figure 6–3 for detailed illustration.)

1. Loosen nine captive screws holding the front door of relay box in place.
2. Swing out front door of relay box.
3. Using proper nut driver from nut driver set, unscrew three nuts holding relay to relay door. Unplug relay.
4. Reverse steps 1. through 3. to complete installation of the new relay.
5. Plug the UD70/170PS1 Power Supply cord 70/170W150 into the Power Strip UD70/170J23 in both RPGPCA cabinets.

6.5.5 REMOTE RDA MAINTENANCE TERMINAL CPU UD32A9/MONITOR UD32A10 REPLACEMENT PROCEDURE.

One technician is required for this procedure.

6.5.5.1 Equipment and Tools Required.

1. Screwdriver set, flat–tip
2. Screwdriver set, Phillips–tip

6.5.5.2 Initial Conditions/Preliminary Setup. (Refer to Figure 1–4 for part location.)

NOTE

Read paragraph 6.5.2 for special considerations for replacement procedures.

1. Locate the CPU UD32A9 or Monitor UD32A10 at the Remote RDA Maintenance Terminal UD32.

6.5.5.3 Replacement Procedure.

1. At the front of the Monitor UD32A10, turn power Off by pressing the power button.
2. At the front of the CPU UD32A9, turn power Off by pressing the power button.
3. At the rear of the CPU UD32A9, disconnect the monitor video cable from the monitor jack at the lower right corner.

NOTE

If replacing only the Monitor UD32A10, perform step 4.
Otherwise, skip step 4 and proceed to step 5.

4. For Monitor UD32A10 replacement only, perform the following:
   a. At the rear of the monitor, disconnect the AC power cord.
   b. Remove defective monitor and set new monitor in place.
   c. Reconnect the AC power cord to rear of monitor.
   d. Connect the monitor video cable to the monitor jack at the rear of the CPU.
   e. At the front of the monitor, press the power button to turn power On.
   f. At the front of the CPU, press the power button to turn power On.
5. At the rear of the CPU UD32A9, perform the following:
   a. Disconnect the AC power cord.
   b. Disconnect the keyboard cable from the ”orange” jack.
   c. Disconnect the mouse cable from the ”green” jack.
   d. Disconnect the RS−232 cable 32W905 and Serial Adapter UD32CP1 from the COMM B serial port (center top).
   e. Disconnect the RS−232 cable 32W906 and Null Modem Adapter UD32A12 from the COMM A serial port (center bottom).
   f. Disconnect the TELCO cable 32W900 from the TELCO jack.
6. Remove the defective CPU and set it aside.
7. Install the new CPU.
8. At the rear of the CPU, reconnect the cables removed in step 5 and step 3 (monitor video cable).
9. At the front of the monitor, press the power button to turn power On.

10. At the front of the CPU, press the power button to turn power On.

6.5.5.4 Terminal Setup Configuration Procedure.

NOTE

The operation of the terminal is controlled by the configuration options selected in the setup configuration mode. The configuration parameters listed in Table 6–7 should be checked or set prior to doing a startup procedure after installation or replacement of the terminal.

1. Press the **<Shift>** and **<Setup/Reset>** keys simultaneously to enter setup configuration and display Main Setup menu. See Figure 6–4. If the Main Setup menu does not appear, perform step 2.; otherwise skip to step 3.

NOTE

The Main Setup menu contains all available options for the configuration of the terminal. Check or set the parameters according to Table 6–7 using Figure 6–4 as an example only.

2. If pressing the **<Shift>** and **<Setup/Reset>** keys simultaneously does not result in the display of the Main Setup menu, the terminal may not be set up to emulate a 6312. Press the **<F3>** key and then press the **<F2Ø>** key to display the Main Setup menu. If the Main Setup menu is not displayed on the screen, press the **<Ctrl>** and **<F3>** keys simultaneously and then press the **<F2Ø>** key.

3. Tab cursor to parameter fields and enter data as follows:

   a. Press **<Space Bar>** until desired parameter is displayed in other fields.

   b. For special function characters in the terminator parameters field refer to Table 6–8.

4. Press the **<Setup/Reset>** key. `SAVE ALL? (Y/N)` is displayed on the lower right area of the screen. To save configuration and exit setup configuration press, the **Y** key.

5. Press the **<Shift>** and **<Port>** keys to shift to other port.

6. Press the **<Shift>** and **<Setup/Reset>** keys to enter setup configuration.

7. Repeat steps 1. through 4. for the configuration of the Application Terminal port.

KBD CTRL	N	ESC	N	CURSOR, EDIT KEYS	N	TAB BACKTAB	N	CR.LF
	N	F01-F04	N	F05-F08	N	F09-F12	N	F13-F16
KBD LOCK	Y	ESC	N	CURSOR KYS	N	TAB BACKTAB	N	CR.LF
	N	F01-F04	N	F05-F08	N	F09-F12	N	F13-F16
MODE	Y	SCROLL	N	AUTO LINE FEED	Y	AUTO TAB	Y	NEW LINE
	N	UPPER CASE	N	INVERSE VIDEO	Y	BLINK CURSOR	Y	BLOCK CURSOR
	N	KEY CLICK	Y	SCREEN SAVE	N	SMOOTH SCROLL	N	BACKTAB KEY
SYSTEM	N	SEND STAT LINE	N	DISPLAY STAT LN	Y	PWR UP ON LINE	Y	RETURN=SEND
	N	EXPERT	N	CLEAR TO SPACES	Y	SEND CRSR EDIT	N	SEND CLEAR ALL
COMM.	N	BLOCK	N	POLLED	Y	ONE STOP BIT	N	HALF DUPLEX
	N	NULL SUPP UNFOR	N	NULL SUPP FORMT	Y	XON/XOFF	N	113J
PRINTER	N	LINE DRAWING	Y	READY(-)	Y	ONE STOP BIT		
COMM MODE	PAGE	PARITY	EVEN	BAUD	9600	PRT MODE	PAGE	PARITY	SPACE	BAUD	9600
BRIGHTNESS	13	CONTRAST	3	COLS	80	LINES	24	BELL VOL	2	POUND CHAR	HASH
EMULATION	6312	ACTIVE HOST PORT	A	VIRTUAL TERMINAL	ON	LANGUAGE	US				
TERMINATOR	EXCNCN	SEND LINE	GSCNCN	FIELD	CNCNCN	UNFORMAT LINE	EXCNCN	UNFORMAT PG			
	EXCNCN	FORMAT PG	CNCNCN	REQ TO SEND	CRLFCNCNEXCNCN	PRINT LINE					
SPCL CHAR	EC	MULTICODE CHAR	A	POLL CHAR	D3	PAUSE CHAR	D1	RESUME CHAR	080	RING BELL	
FUNCTION KEYS: HERE IS=				TRANSMIT DELAY	NONE	ATTRIBUTE EFFECT	DELAYED				

DEPRESS Y OR N TO SET VALUE
DEPRESS ↑↓←→ OR TAB TO SELECT ITEM
DEPRESS RESET TO EXIT DEPRESS F1 FOR GENERAL SETUP
POSITION CURSOR TO THIS FIELD FOR FUNCTION KEY DEFINITIONS

NX1643

Figure 6–4. Main Setup Menu

Table 6–7. Parameter Options

Parameter	Default Value	System Console Value Port A	Application Terminal Value Port B
Kbd Cntrl Parameters			
+Esc	N	N	N
+Cursor, edit kys	N	N	N
+Tab backtab	N	N	N
+Cr, lf	N	N	N
+F01–F04	N	Y	N
+F05–F08	N	Y	N
+F09–F12	N	Y	N
+F13–F16	N	Y	N
Kbd Lock Parameters			
+Esc	N	N	Y
+Cursor kys	N	N	N
+Tab backtab	N	N	N
+Cr, lf	N	N	N
+F01–F04	N	N	N
+F05–F08	N	N	N
+F09–F12	N	N	N
+F13–F16	N	N	N
Mode Parameters			
+Scroll	Y	Y	Y
+Auto line feed	N	N	N
+Auto tab	Y	Y	Y
+New line	Y	Y	Y
*Upper case	N	N	N
*Inverse video	N	N	N
*Blink cursor	Y	Y	Y
*Block cursor	Y	Y	Y
*Key click	N	N	N
*Screen save	Y	N	Y
*Smooth scroll	N	N	N
*Backtab Key	N	N	N

– – – – –

* The values picked for these parameters are not necessary for system operation, nor are they downloaded by the processor to the applications port.

\+ Value required for operation in WSR–88D environment.

Table 6–7. Parameter Options – Continued

Parameter	Default Value	System Console Value Port A	Application Terminal Value Port B
System Parameters			
+Send stat line	Y	Y	N
+Dsplay stat ln	Y	Y	Y
+Pwr up on line	Y	Y	Y
+Return=send	Y	N	Y
+Expert	N	N	N
+Clear to spaces	Y	Y	Y
+Send crsr edit	Y	Y	N
+Send clear all	N	N	N
Comm Parameters			
Block	N	N	N
*Polled	N	N	N
+One Stop Bit	Y	Y	Y
+Half duplex	N	N	N
+Null supp unfor	N	Y	N
+Null supp formt	Y	Y	N
+Xon/Xoff	N	N	Y
+113J	N	N	N
Printer Parameters			
+Line drawing	Y	N	N
+Ready (–)	N	N	Y
*One Stop Bit	Y	Y	Y
Comm:			
*Mode	Line	Line	Page
+Parity	Even	Even	Even
*Baud	9600	9600	9600
Printer Parameters			
+Prt mode	Page	Page	Line
*Parity	Space	Space	Space
Screen Display Parameters			

– – – – –

* The values picked for these parameters are not necessary for system operation, nor are they downloaded by the processor to the applications port.

\+ Value required for operation in WSR–88D environment.

Table 6–7. Parameter Options – Continued

Parameter	Default Value	System Console Value Port A	Application Terminal Value Port B
*Cols	80	80	80
*Lines	24	24	24
*Bell vol	2	2	2
*Pound char	Hash	Hash	Hash
Comm Parameters			
+Emulation	6312	6312	6312
+Active host port	A	A	B
*Virtual terminal	Off	On	On
+Language	US	US	US
Terminator Parameters			
+Send line	Ex cn cn cn	Ex cn Cn cn	Ex cn Cn cn
+Field	Gs cn cn cn	Gs cn cn cn	Gs cn cn cn
+Unformat line	Cn cn cn cn	Cn cn cn cn	Cn cn cn cn
+Unformat pg	Ex cn cn cn	Ex cn cn Cn	Ex cn cn cn
+Format pg	Ex cn cn cn	Ex cn cn cn	Ex cn cn cn
+Req to send	Cn cn Cn cn	Cn cn cn cn	Cn cn cn cn
+Print line	Cr lf cn cn cn cn cn	Cr lf cn cn cn cn cn	Cr lf cn cn cn cn cn
Spec Char Parameters			
Multicode char	EC	EC	EC
Poll char	A	A	A
Pause char	D3	D3	DC3
Resume char	D1	D1	DC1
Ring bell	080	80	80
Comm Parameters			

– – – – –

* The values picked for these parameters are not necessary for system operation, nor are they downloaded by the processor to the applications port.

\+ Value required for operation in WSR–88D environment.

Table 6–7. Parameter Options – Continued

Parameter	Default Value	System Console Value Port A	Application Terminal Value Port B
Transmit delay	None	None	None
Screen Display Parameters			
Attribute effect	Delayed	Delayed	Delayed

– – – – –

* The values picked for these parameters are not necessary for system operation, nor are they downloaded by the processor to the applications port.

\+ Value required for operation in WSR–88D environment.

Table 6–8. Special Function Characters

Special Function Character	Press <Ctrl> key and
E_X	C
C_N	X
G_S	]
C_R	M
L_F	J
E_C	[
D_3	S
D_1	Q

NOTES

Parameters may be entered on category configuration menus instead of Main Setup menu. For information about these menus, refer to the COTS manual, Guide to Installing and Using the CDT–100, Chapter 10.

Use function key F6 to exit these menus and display main setup menu. All parameter entries are saved when the F6 key is pressed.

6.5.6 REMOTE RDA MAINTENANCE TERMINAL DUAL A/B SWITCH UD32A2 REPLACEMENT PROCEDURE.

One technician is required for this procedure.

6.5.6.1 Equipment and Tools Required.

1. Screwdriver set, flat–tip

6.5.6.2 Initial Conditions/Preliminary Setup. (Refer to Figure 1–4 for part location.)

1. Locate the Dual A/B Switch UD32A2 at the Remote RDA Maintenance Terminal.

6.5.6.3 Replacement Procedure.

1. Turn the STATMUX power switch (On/Off) (located at the rear of the STATMUX) to the Off position.
2. Locate and unscrew two flat–tip screws securing each of the six connectors to rear of the Dual A/B Switch. Remove all connectors and label them (for reinstallation).
3. Remove screws, and washers that secure the Dual A/B Switch to workstation using the proper screwdriver.
4. Reverse steps 1. through 3. to complete installation of the new Dual A/B Switch.

6.5.7 REMOTE RDA MAINTENANCE TERMINAL STATMUX UD32A3 (PENRIL VCX–150) REPLACEMENT PROCEDURE.

Two technicians are required.

6.5.7.1 Equipment and Tools Required.

1. Screwdriver set, flat–tip
2. Screwdriver set, Phillips–tip

6.5.7.2 Initial Conditions/Preliminary Setup. (Refer to Figure 1–4 for part location.)

1. For UD32A3, locate the STATMUX to be replaced at workstation.

6.5.7.3 Replacement Procedure.

1. Switch STATMUX On/Off switch to Off at rear of chassis.
2. Unplug power cord.
3. Unscrew two screws holding each connector to back of chassis. Unplug all connectors from the STATMUX and label them (for reinstallation).
4. While another technician supports unit, remove screws, and washers from the mounting straps using the proper screwdriver.

5. Reverse steps 1. through 4. to complete installation of the new STATMUX.

6. Setup the new STATMUX as described in paragraph 6.6.2.

6.5.8 REMOTE RDA MAINTENANCE TERMINAL STAND–ALONE DIAL PORT MODEM (CODEX 326x) UD32A4 REPLACEMENT PROCEDURE.

One technician is required for this procedure.

6.5.8.1 Equipment and Tools Required.

1. Screwdriver set, flat–tip

2. Screwdriver set, Phillips–tip

6.5.8.2 Initial Conditions/Preliminary Setup. (Refer to Figure 1–4 for part location.)

NOTE

Read paragraph 6.5.2 for special considerations for replacement procedures.

1. For an NWS redundant system, locate the UD32A4 at Remote RDA Maintenance Terminal.

6.5.8.3 Replacement Procedure.

1. Place Power 0/1 switch at the back of the modem to the 0 position to remove power. (See Figure 6–5.)

2. Disconnect modem AC power cord, located at the back, from the source.

3. Disconnect the leased line (W239) from the back of the modem unit.

4. Disconnect the DTE cable (32W7) from the back of the modem using the proper screwdriver.

5. Install new modem into holding brackets and tighten bracket screws.

6. Ensure that all six DIP switches at the back of the modem are in the Off (up) position.

7. Connect the DTE cable (32W7) to the back of the modem using the proper screwdriver.

8. Connect the leased line cable (W239) to the back of the modem.

9. Connect the AC power cord to the back of the modem.

10. Apply power to the modem by pressing the Power 0/1 switch at the back of the modem to the 1 position.

11. For UD32A4, perform setup procedures described in paragraph 6.6.3.

6.5.9 BDDS PROCESSOR ASSEMBLY (SUN ULTRA 5) UD70A1 REPLACEMENT PROCEDURE.

Two technicians are required for this procedure.

6.5.9.1 Equipment and Tools Required.

1. 6–foot step ladder.

6.5.9.2 Initial Conditions/Preliminary Setup. (Refer to Figure 1–3 for BDDS processor location.)

1. Open the RPGPCA cabinet doors and locate the defective BDDS processor Assembly UD70A1.

2. For NWS and DoD sites to access the BDDS processor:

   a. Depressing the **<Scroll Lock>** button twice on the keyboard will cause the CDE Login screen or the `Selection Menu` to appear on the monitor.

   b. If a CDE Login screen appears, continue with this step, otherwise continue to step c. Enter **raritan<CR>** for the user (no password). The `Selection Menu` will appear on the monitor.

   c. Under normal conditions, the RPG processor is `Channel 1`, the BDDS processor is `Channel 2` and KBD Failure is `Channel 3`.

   d. Using the ↓ and ↑ keys on the keyboard highlight the BDDS channel. Press **<CR>** to invoke the selection.

CAUTION

Failure to perform the applicable shutdown procedures in steps 3. through 6. could cause serious damage to the BDDS processor.

3. If at a CDE Login screen, skip to step 5.

4. If within CDE and the BDDS processor is responding, click **EXIT ▶ OK** to log out and return to the CDE Login screen. If the BDDS processor is not responding skip to step 6.

5. Push the power button on the front of the BDDS processor. Wait about 20 seconds for the shutdown to complete. The system should shut down to an `ok` prompt.

6. At the back of the BDDS processor turn the power switch to Off.

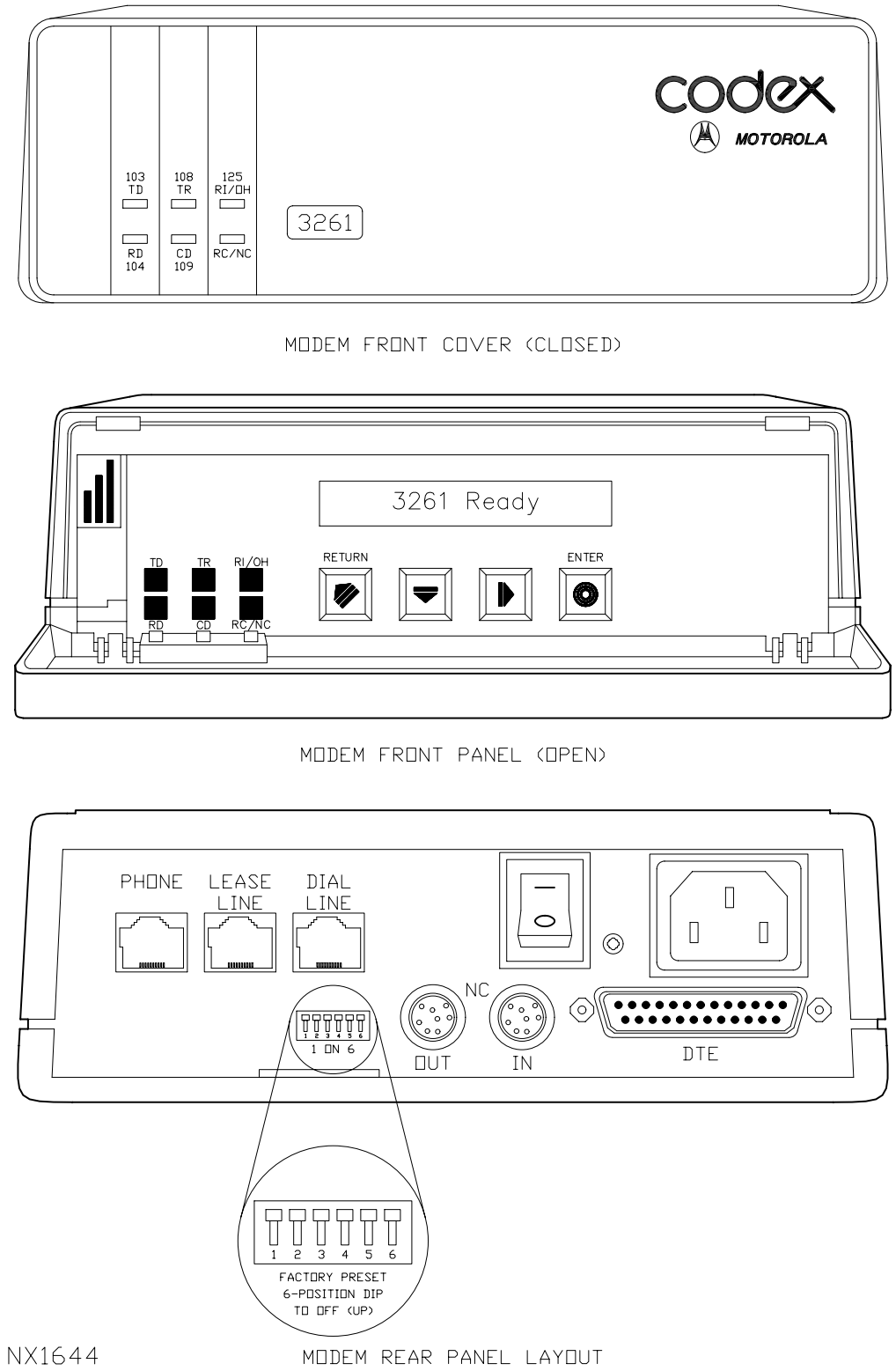

Figure 6–5. Stand–Alone Dial Modem (Codex 326x) UD32A4

WARNING

Lethal voltages (from commercial power, CRTs, high−voltage power supplies, and low−voltage, high current power supplies) are present in much of the RPG Group equipment. Observe appropriate safety precautions at all times to ensure personnel safety. The maintenance technician must be familiar with the safety summary at the beginning of this document prior to performing any maintenance procedure.

6.5.9.3 Replacement Procedure.

1. Locate and disconnect the AC power cord (70/170W55) from the back of the BDDS processor.
2. Disconnect cable 70/170W304 from the keyboard port and disconnect cable 70/170W304A from the video port at the back of the BDDS processor.
3. Disconnect cable 70/170W204 from the Network port (<...>)at the back of the BDDS processor.
4. Disconnect cable 70/170W212 from PCI Card 1 at the back of the BDDS processor.
5. Extend the sliding shelf, the BDDS processor rests on, forward out of the RPGPCA until the BDDS processor is clear of the RPGPCA. The rails on the shelf are designed to not extend any further than safely permitted.

WARNING

Until the BDDS processor shelf is slid back into the RPGPCA, it represents a possible injury hazard to personnel. Use caution when standing or working near the extended shelf to prevent from striking the shelf.

NOTE

There is a green lock button on each side of the shelf rails, which is a 2−stage locking mechanism when the shelf is in the outward position. To slide the shelf back into the RPGPCA these green buttons must be depressed until the shelf is slid past the locking mechanism.

WARNING

Pinched or cut fingers could result if care is not taken while depressing the green lock buttons and sliding the shelf inward.

6. Have a second technician standing by to receive the BDDS processor.

7. Standing on the ladder, release the Velcro strapping which secures the BDDS processor to the shelf.

8. Remove the BDDS processor off the shelf and hand it to the second technician. Have the second technician set it aside.

9. Reverse steps 1. through 8. to complete installation of the new BDDS processor.

10. For setup procedures and instructions, see paragraph 6.6.4.

6.5.10 ROUTER ASSEMBLY (CISCO 3640) UD70A2 REPLACEMENT PROCEDURE.

Two technicians are required for this procedure.

6.5.10.1 Equipment and Tools Required.

1. Screwdriver set, Phillips–tip

6.5.10.2 Initial Conditions/Preliminary Setup. (Refer to Figure 1–3 for Router location.)

1. Open the RPGPCA cabinet doors and locate the defective Router UD70A2.

CAUTION

Failure to perform step 2. could cause serious damage to the Router.

2. At the back of the defective Router, turn the power switch to Off.

WARNING

Lethal voltages (from commercial power, CRTs, high–voltage power supplies, and low–voltage, high current power supplies) are present in much of the RPG Group equipment. Observe appropriate safety precautions at all times to ensure personnel safety. The maintenance technician must be familiar with the safety summary at the beginning of this document prior to performing any maintenance procedure.

6.5.10.3 Replacement Procedure.

1. Locate and disconnect the AC power cord from the back of the Router.

   a. NWS and DoD: 70/170W52

   b. FAA: 70/170W65

NOTE

Steps 2. through 4. reference the modules installed in the back of the Router. Module 0 (UD70/170A2A1A0) is the bottom right module. Module 1 (UD70/170A2A1A1) is the bottom left module. The Module 2 (UD70/170A2A1A2) is the top right module on the back of the Router. The Module number is engraved on the Router case and may be difficult to see.

2. On Module 0 (UD70/170A2A1A0) on the back of the Router:

   a. Disconnect 70/170W203 from the FAST ETH 0 Port.

   b. NWS: Disconnect 70/170W200 from the FAST ETH 1 Port.

   c. FAA: Disconnect 70/170W233 from the FAST ETH 1 Port.

3. On Module 1 (UD70/170A2A1A1) on the back of the Router:

   a. Disconnect 70/170W261 from the T1 DSU/CSU port.

   b. NWS: Disconnect 70/170W235 from the FAST ETH 0 Port.

4. On Module 2 (UD70/170A2A1A2) at the back of the Router disconnect 70/170W265 from Serial Port 0 and 70/170W291 through 70/70W297 from Serial Ports 1 through 7, respectively.

5. At the front of the Router, disconnect the following cables:

   a. Cable 70/170W254 from the AUX port.

   b. Cable 70/170W315C from the CON port.

6. With a second technician supporting the Router, remove the screws and washers which secure the Router to the cabinet mounting rails.

7. With the assistance of the second technician, remove the Router out of the cabinet and set the Router aside.

8. If mounting brackets are not provided with the new Router, remove the mounting brackets from the defective Router for reuse.

9. Attach the mounting brackets to the new Router in the same manner that the defective Router had the brackets installed.

10. Reverse reverse steps 1. through 7. to complete installation of the new Router.

11. Turn the power switch to On to complete the installation.

12. For setup procedures and instructions see paragraph 6.6.5.

6.5.11 KVM SWITCH (RARITAN SMX18) UD70A3 REPLACEMENT PROCEDURE.

Two technicians are required for this procedure.

6.5.11.1 Equipment and Tools Required.

1. Screwdriver set, Phillips–tip

6.5.11.2 Initial Conditions/Preliminary Setup. (Refer to Figure 1–3 for KVM Switch location.)

1. Locate the Raritan KVM Switch UD70A3.
2. For NWS and DoD sites to access the BDDS processor:
   a. Depressing the **<Scroll Lock>** button twice on the keyboard will cause the CDE Login screen or the `Selection Menu` to appear on the monitor.
   b. If a CDE Login screen appears, continue with this step, otherwise continue to step c. Enter **raritan<CR>** for the user (no password). The `Selection Menu` will appear on the monitor.
   c. Under normal conditions, the RPG processor is `Channel 1`, the BDDS processor is `Channel 2`, and KBD Failure is `Channel 3`.
   d. Using the ↓ and ↑ keys on the keyboard highlight the BDDS channel. Press **<CR>** to invoke the selection.

CAUTION

Failure to perform the applicable shutdown procedures in steps 3. through 7. could cause serious damage to the KVM Switch, BDDS and RPG processors.

3. At the BDDS:
   a. If at a CDE Login screen, skip to step c.
   b. If within CDE, click **EXIT ▶ OK** to log out and return to the CDE Login screen.
   c. Push the power button on the front of the BDDS processor. Wait about 20 seconds for the shutdown to complete. The system should shut down to an `ok` prompt.
   d. At the back of the BDDS processor turn the power switch to Off.
4. For NWS and DoD sites to access the RPG processor:
   a. Depressing the **<Scroll Lock>** button twice on the keyboard will cause the CDE Login screen or the `Selection Menu` to appear on the monitor.
   b. If a CDE Login screen appears, continue with this step, otherwise continue to step c. Enter **raritan<CR>** for the user (no password). The `Selection Menu` will appear on the monitor.

c. Under normal conditions, the RPG processor is `Channel 1`, the BDDS processor is `Channel 2`, and KBD Failure is `Channel 3`.

d. Using the ↓ and ↑ keys on the keyboard highlight the RPG channel. Press **<CR>** to invoke the selection.

5. At the RPG processor:

   a. Login to the CDE as a normal user, if necessary.

   b. If the PowerChute display window is open, double–click on the minus sign (–) in the upper left corner of the PowerChute display window to close the PowerChute software.

   c. On the CDE Control Panel, click **EXIT ▶ OK** to log out of the CDE and return to the CDE Login screen.

   d. Push the power button on the front of the RPG processor. There is no immediate response for approximately 50 seconds, then another 20 seconds to complete the shutdown. The system should shut down to an `ok` prompt.

   e. At the back of the RPG processor turn the power switch to Off.

6. At the front of the Monitor, turn the power switch Off.

7. At the back of the KVM Switch, turn the power switch to Off.

WARNING

Lethal voltages (from commercial power, CRTs, high–voltage power supplies, and low–voltage, high current power supplies) are present in much of the RPG Group equipment. Observe appropriate safety precautions at all times to ensure personnel safety. The maintenance technician must be familiar with the safety summary at the beginning of this document prior to performing any maintenance procedure.

6.5.11.3 Replacement Procedure.

1. Locate and disconnect the AC power cord 70/170W77 from the back of the KVM Switch.

2. Disconnect 70/170W303 from Channel Port 1 at the back of the KVM Switch.

3. Disconnect 70/170W304 from Channel Port 2 at the back of the KVM Switch.

4. Disconnect 70/170W311 from the User Port 1 at the back of the KVM Switch.

5. With a second technician supporting the KVM Switch, remove the screws and washers securing the KVM Switch to the cabinet mounting rails.

6. Remove the KVM Switch from the cabinet and set the unit aside.
7. If mounting brackets are not provided, remove the mounting brackets from the defective KVM Switch for reuse.
8. Attach the mounting brackets to the new KVM Switch in the same manner that the defective KVM Switch had the brackets installed.
9. With the assistance of the second technician, secure the new KVM Switch to the cabinet mounting rails using the four Phillips–tip mounting screws and washers previously removed.
10. Ensure the power switch, at the back of the new KVM Switch, is in the Off position.
11. Reverse steps 1. through 4. to complete installation of the new KVM Switch.
12. Turn the power On to the Monitor.
13. At the rear of the processors, turn the power switches On to the BDDS and RPG processors.
14. Turn the power switch On to the KVM Switch.
15. For setup procedures and instructions, see Section 6.6, paragraph 6.6.6.
16. Press the **<F9>** key, the Login screen appears.
17. Using the keyboard, at the `User Name` prompt, enter **raritan<CR>**.
18. The `Selection Menu` appears on the monitor.
19. Use the KVM Switch `Selection Menu` to select the BDDS processor channel.
    a. Under normal conditions, the RPG processor is `Channel 1`, the BDDS processor is `Channel 2`, and KBD Failure is `Channel 3`.
    b. Using the ↓ and ↑ arrow keys on the keyboard to highlight the BDDS processor channel. Press **<CR>** to invoke the selection.
20. Log into the CDE of the BDDS processor as a normal user to verify KVM Switch operability. BDDS processor software starts automatically. Exit out of the CDE.
21. Use the KVM Switch `Selection Menu` to select the RPG processor channel.
    a. Under normal conditions, the RPG processor is `Channel 1`, the BDDS processor is `Channel 2`, and KBD Failure is `Channel 3`.
    b. Using the ↓ and ↑ arrow keys on the keyboard to highlight the RPG processor channel. Press **<CR>** to invoke the selection.
22. Log into the CDE of the RPG processor as a normal user.
23. This completes the replacement procedure.

6.5.12 RPG 17–INCH MONITOR (SUN) UD70A4 REPLACEMENT PROCEDURE.

Two technicians are required for this procedure.

6.5.12.1 Equipment and Tools Required.

1. None

6.5.12.2 Initial Conditions/Preliminary Setup. (Refer to Figure 1–3 RPG Monitor location.)

1. Locate the defective RPG Sun 17–inch Monitor UD70A4.

CAUTION

Failure to perform step 2. could cause serious damage to the RPG Monitor.

2. At the front of the defective RPG Monitor, turn the power switch to Off.

WARNING

Lethal voltages (from commercial power, CRTs, high–voltage power supplies, and low–voltage, high current power supplies) are present in much of the RPG Group equipment. Observe appropriate safety precautions at all times to ensure personnel safety. The maintenance technician must be familiar with the safety summary at the beginning of this document prior to performing any maintenance procedure.

6.5.12.3 Replacement Procedure.

1. Locate and disconnect the AC power cord 70/170W58 from the back of the Monitor.

2. Locate and disconnect the Monitor HD15M cable

   a. NWS and DoD: From the CP13 interconnect adapter

   b. FAA: From the Video Port at the back of the RPG processor

3. Extend the sliding shelf the Monitor rests on, forward, out of the RPGPCA until the Monitor is clear of the RPGPCA and the shelf is locked in the outward position. The rails on the shelf are designed to completely extend and lock.

WARNING

Until the Monitor shelf is slid back into the RPGPCA, it represents a possible injury hazard to personnel. Use caution when standing or working near the extended shelf to prevent accidently striking the shelf.

NOTE

There are green 2–stage lock buttons on each side of the shelf rails, which acts as a locking mechanism when the shelf is in the outward position. To slide the shelf back into the RPGPCA these green buttons must be depressed until the shelf is slid past the locking mechanism.

WARNING

Pinched or cut fingers could result if care is not taken while depressing the green lock buttons and sliding the shelf inward.

4. Release the Velcro straps which secure the Monitor to the shelf.
5. Ensuring the shelf is in a locked position, slide the Monitor back towards the RPGPCA, approximately 3 inches, to remove the Monitor base from its strapping.
6. With help from the second technician, remove the Monitor from the cabinet. Set the RPG Monitor aside.
7. Reverse steps 1. through 6. to complete installation of the new Monitor.
8. Turn the power switch On to the new Monitor.
9. There are no follow–on setup procedures for this piece of equipment.

6.5.13 RPG KEYBOARD (SUN) UD70A5 REPLACEMENT PROCEDURE.

One technician is required for this procedure.

The Keyboard is a hot–swappable item.

6.5.13.1 Equipment and Tools Required.

1. None

6.5.13.2 Initial Conditions/Preliminary Setup. (Refer to Figure 1–3 for Keyboard and Mouse location.)

1. Locate the Sun Keyboard UD70A5 and Mouse UD70A6 in the RPGPCA UD70.
2. For NWS and DoD sites to access the KBD Failure feature:

a. Depressing the **<Scroll Lock>** button twice on the keyboard will cause the CDE Login screen or the `Selection Menu` to appear on the monitor.

b. If a CDE Login screen appears, continue with this step, otherwise continue to step c. Enter **raritan<CR>** for the user (no password). The `Selection Menu` will appear on the monitor.

c. Under normal conditions, the RPG processor is `Channel 1`, the BDDS processor is `Channel 2`, and KBD Failure is `Channel 3`.

d. Using the ↓ and ↑ keys on the keyboard highlight the KBD Failure channel. Press **<CR>** to invoke the selection.

6.5.13.3 Replacement Procedure.

1. Locate and disconnect the Keyboard cable.

   a. NWS and DoD: Disconnect the Keyboard cable from the W311 cable at the interconnect.

   b. FAA: Disconnect from the Keyboard port at the back of the RPG processor.

2. If necessary, extend out the writing surface board in the RPGPCA cabinet.

3. Lift and place the Keyboard face down upon the writing surface.

4. Disconnect the Mouse cable from the back of the Keyboard.

5. Remove the Mouse and set it aside.

6. Remove the Keyboard and set it aside.

7. Connect the Mouse to the new Keyboard. Run the Mouse cable so the Mouse sits on the pull–out surface with its cable out of the way.

8. Reverse steps 1. through 3. complete installation of the new Keyboard.

9. There are no follow–on setup procedures for this piece of equipment.

6.5.14 RPG MOUSE (SUN) UD70A6 REPLACEMENT PROCEDURE.

One technician is required for this procedure.

6.5.14.1 Equipment and Tools Required.

1. None

6.5.14.2 Initial Conditions/Preliminary Setup. (Refer to Figure 1–3 for Keyboard and Mouse location.)

1. Locate the Sun Mouse UD70A6.

6.5.14.3 Replacement Procedure.

1. For NWS and DoD sites to access the KBD Failure feature:

   a. Depressing the **<Scroll Lock>** button twice on the keyboard will cause the CDE Login screen or the `Selection Menu` to appear on the monitor.

   b. If a CDE Login screen appears, continue with this step, otherwise continue to step c. Enter **raritan<CR>** for the user (no password). The `Selection Menu` will appear on the monitor.

   c. Under normal conditions, the RPG processor is `Channel 1`, the BDDS processor is `Channel 2`, and KBD Failure is `Channel 3`.

   d. Using the ↓ and ↑ keys on the keyboard highlight the KBD Failure channel. Press **<CR>** to invoke the selection.

2. Locate and disconnect the Keyboard cable at its first interconnect.

   a. NWS and DoD: Disconnect the Keyboard cable from the W311 cable at the interconnect.

   b. FAA: Disconnect from the Keyboard port at the back of the RPG processor.

3. Extend out the writing surface board in the RPGPCA cabinet.

4. Lift and place the Keyboard face–down upon the writing surface.

5. Disconnect the Mouse cable from the back of the Keyboard.

6. Remove the defective Mouse and set it aside.

7. Connect the new Mouse cable to the Keyboard. Run the Mouse cable so the Mouse sits on the pull–out surface with its cable out of the way.

8. Replace the Keyboard to its original position.

9. There are no follow–on setup procedures for this piece of equipment.

6.5.15 RPG PROCESSOR ASSEMBLY (SUN ULTRA 10) UD70A7 REPLACEMENT PROCEDURE.

One technician is required for this procedure.

6.5.15.1 Equipment and Tools Required.

1. None

6.5.15.2 Initial Conditions/Preliminary Setup. (Refer to Figure 1–3 for RPG processor location.)

1. Open the RPGPCA cabinet doors and locate the defective RPG processor Assembly UD70A7.

CAUTION

Failure to perform the applicable shutdown procedures in steps 2. through 6. could cause serious damage to the RPG processor.

1. For NWS and DoD sites to access the RPG processor:

   a. Depressing the **<Scroll Lock>** button twice on the keyboard will cause the CDE Login screen or the `Selection Menu` to appear on the monitor.

   b. If a CDE Login screen appears, continue with this step, otherwise continue to step c. Enter **raritan<CR>** for the user (no password). The `Selection Menu` will appear on the monitor.

   c. Under normal conditions, the RPG processor is `Channel 1`, the BDDS processor is `Channel 2`, and KBD Failure is `Channel 3`.

   d. Using the ↓ and ↑ keys on the keyboard highlight the RPG processor channel. Press **<CR>** to invoke the selection.

2. Login to the CDE as a normal user, if necessary. If the processor is not responding skip to step 6., otherwise continue to the next step.

3. If the PowerChute display window is open, double–click on the minus sign (–) in the upper left corner of the PowerChute display window to close the PowerChute software.

4. On the CDE Control Panel, click **EXIT ▶ OK** to log out of the CDE and return to the CDE Login screen.

5. Push the power button on the front of the RPG processor. There is no immediate response for approximately 50 seconds, then another 20 seconds to complete the shutdown. The system should shut down to an `ok` prompt.

6. At the back of the RPG processor turn the power switch to Off.

WARNING

Lethal voltages (from commercial power, CRTs, high–voltage power supplies, and low–voltage, high current power supplies) are present in much of the RPG Group equipment. Observe appropriate safety precautions at all times to ensure personnel safety. The maintenance technician must be familiar with the safety summary at the beginning of this document prior to performing any maintenance procedure.

6.5.15.3 Replacement Procedure.

1. FAA sites: Turn the power Off to the Monitor.

2. Turn the power Off to the Backup Storage Device.
3. Locate and disconnect the AC power cord from the back of the RPG processor.
   a. NWS and DoD: 70/170W50
   b. FAA: 70/170W61
4. Disconnect the Keyboard and Video cables from their respective ports on the RPG processor.
   a. NWS and DoD: Cable 70/170W303 and cable 70/170W303A
   b. FAA: Keyboard and Monitor cables
5. MLOS sites only: Disconnect the serial cable 70/170W257 from the Serial Port.
6. Disconnect the UPS serial cable 70/170W255 from Serial Port B.
7. Disconnect the LAN cable 70/170W201 from the Network Port <...>.
8. Disconnect cable 70/170W301 from the SCSI Card in PCI Slot 1, Port A.
9. Disconnect cable 70/170W315 from the 8–Port Serial Card in PCI Slot 3.
10. NWS sites:
    a. Disconnect serial cable 70/170W253 from the Serial Card in PCI Slot 2, Port 3.
    b. Disconnect serial cable 70/170W251 from the Serial Card in PCI Slot 2, Port 1.
11. DoD sites:
    a. Disconnect serial cable 70/170W253 from the Serial Card in PCI Slot 2, Port 3.
    b. Disconnect serial cable 70/170W251 from the Serial Card in PCI Slot 2, Port 1.
    c. Disconnect serial cable 70/170W250 from the Serial Card in PCI Slot 2, Port 0.
12. FAA sites:
    a. Disconnect serial cable 70/170W253 from the Serial Card in PCI Slot 2, Port 3.
    b. Disconnect serial cable 70/170W252 from the Serial Card in PCI Slot 2, Port 2.
    c. Disconnect serial cable 70/170W251 from the Serial Card in PCI Slot 2, Port 1.
    d. Disconnect serial cable 70/170W250 from the Serial Card in PCI Slot 2, Port 0.
    e. Disconnect cable 70/170W302 from the DIO Card in PCI Slot 4.
13. Extend the sliding shelf the RPG processor rests on, forward, out of the RPGPCA until the RPG processor is clear of the RPGPCA. The rails on the shelf are designed to not extend any further than safely permitted.

WARNING

Until the RPG processor shelf is slid back into the RPGPCA, it represents a possible injury hazard to personnel. Use caution when standing or working near the extended shelf to prevent from striking or tripping over the shelf.

NOTE

There is a green 2–stage lock button on each side of the shelf rails, which acts as a locking mechanism when the shelf is in the outward position. To slide the shelf back into the RPGPCA these green buttons must be depressed until the shelf is slid past the locking mechanism.

WARNING

Pinched or cut fingers could result if care is not taken while depressing the green lock buttons and sliding the shelf inward.

14. Release the Velcro straps which secure the RPG processor to the shelf.

15. Remove the RPG processor and set it aside.

16. Reverse steps 1. through 15. to complete installation of the new RPG processor.

17. For setup procedures and instructions see paragraph 6.6.7.

6.5.16 FLOPPY DRIVE (SUN ULTRA 10) UD70A7A1A2 REPLACEMENT PROCEDURE.

One technician is required for this procedure.

6.5.16.1 Equipment and Tools Required.

1. Screwdriver set, Phillips–tip

2. ESD Component Handling Kit

6.5.16.2 Initial Conditions/Preliminary Setup.

1. Open the RPGPCA cabinet doors and locate the RPG processor Assembly UD70A7.

2. For NWS and DoD sites to access the RPG processor:

   a. Depressing the **<Scroll Lock>** button twice on the keyboard will cause the CDE Login screen or the `Selection Menu` to appear on the monitor.

   b. If a CDE Login screen appears, continue with this step, otherwise continue to step c. Enter **raritan<CR>** for the user (no password). The `Selection Menu` will appear on the monitor.

c. Under normal conditions, the RPG processor is `Channel 1`, the BDDS processor is `Channel 2`, and KBD Failure is `Channel 3`.

d. Using the ↓ and ↑ keys on the keyboard highlight the RPG processor channel. Press **<CR>** to invoke the selection.

CAUTION

Failure to perform the applicable shutdown procedures in steps 3. through 7. could cause serious damage to the RPG processor.

3. Login to the CDE as a normal user, if necessary. If the RPG processor is not responding skip to step 7., otherwise continue to the next step.

4. If the PowerChute display window is open, double–click on the minus sign (**–**) in the upper left corner of the PowerChute display window to close the PowerChute software.

5. On the CDE Control Panel, click **EXIT ▶ OK** to log out of the CDE and return to the CDE Login screen.

6. Push the power button on the front of the RPG processor. There is no immediate response for approximately 50 seconds, then another 20 seconds to complete the shutdown. The system should shut down to an `ok` prompt.

7. At the back of the RPG processor turn the power switch to Off.

8. Place ESD conductive mat upon work surface and connect clip lead to to chassis frame or proper ground.

WARNING

Lethal voltages (from commercial power, CRTs, high–voltage power supplies, and low–voltage, high current power supplies) are present in much of the RPG Group equipment. Observe appropriate safety precautions at all times to ensure personnel safety. The maintenance technician must be familiar with the safety summary at the beginning of this document prior to performing any maintenance procedure.

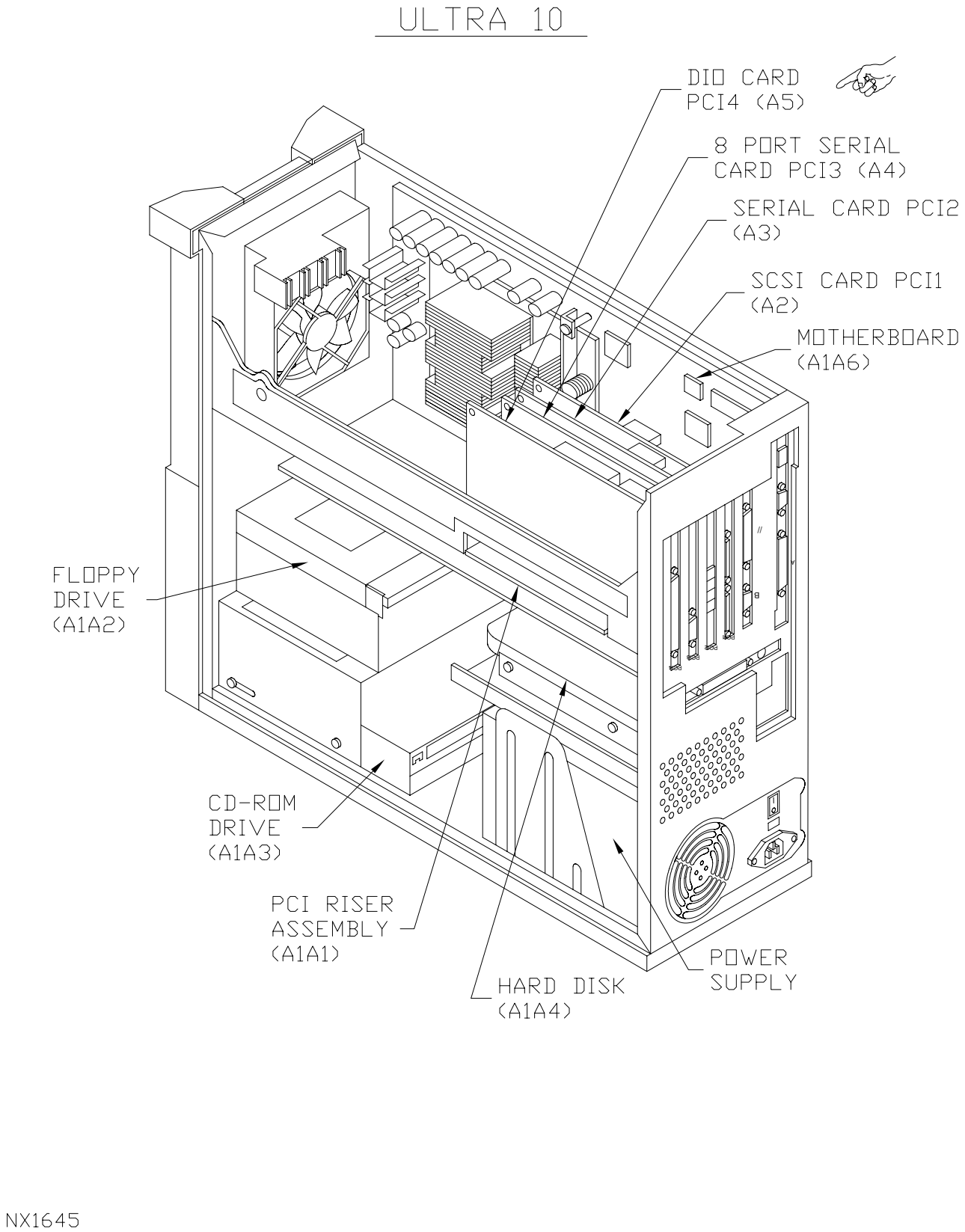

Figure 6–6 RPG Processor Assembly Ultra 10 (UD70A7) Interior Overview

6.5.16.3 Replacement Procedure.

1. FAA sites: Turn the power Off to the Monitor.
2. Turn the power Off to the Backup Storage Device.
3. Locate and disconnect the AC power cord from the back of the RPG processor.
   a. NWS and DoD: 70/170W50
   b. FAA: 70/170W61
4. Disconnect the Keyboard and Video cables from their respective ports on the RPG processor.
   a. NWS and DoD: Cable 70/170W303 and cable 70/170W303A
   b. FAA: Keyboard and Monitor cables
5. MLOS sites only: Disconnect the serial cable 70/170W257 from the Serial Port.
6. Disconnect the UPS serial cable 70/170W255 from Serial Port B.
7. Disconnect the LAN cable 70/170W201 from the Network Port <...>.
8. Disconnect cable 70/170W301 from the SCSI Card in PCI Slot 1, Port A.
9. Disconnect cable 70/170W315 from the 8–Port Serial Card in PCI Slot 3.
10. NWS sites:
    a. Disconnect serial cable 70/170W253 from the Serial Card in PCI Slot 2, Port 3.
    b. Disconnect serial cable 70/170W251 from the Serial Card in PCI Slot 2, Port 1.
11. DoD sites:
    a. Disconnect serial cable 70/170W253 from the Serial Card in PCI Slot 2, Port 3.
    b. Disconnect serial cable 70/170W251 from the Serial Card in PCI Slot 2, Port 1.
    c. Disconnect serial cable 70/170W250 from the Serial Card in PCI Slot 2, Port 0.
12. FAA sites:
    a. Disconnect serial cable 70/170W253 from the Serial Card in PCI Slot 2, Port 3.
    b. Disconnect serial cable 70/170W252 from the Serial Card in PCI Slot 2, Port 2.
    c. Disconnect serial cable 70/170W251 from the Serial Card in PCI Slot 2, Port 1.
    d. Disconnect serial cable 70/170W250 from the Serial Card in PCI Slot 2, Port 0.
    e. Disconnect cable 70/170W302 from the DIO Card in PCI Slot 4.

13. Extend the sliding shelf the RPG processor rests on, forward, out of the RPGPCA until the RPG processor is clear of the RPGPCA. The rails on the shelf are designed to not extend any further than safely permitted.

WARNING

Until the RPG processor shelf is slid back into the RPGPCA, it represents a possible injury hazard to personnel. Use caution when standing or working near the extended shelf to prevent from striking or tripping over the shelf.

NOTE

There is a green 2–stage lock button on each side of the shelf rails, which acts as a locking mechanism when the shelf is in the outward position. To slide the shelf back into the RPGPCA these green buttons must be depressed until the shelf is slid past the locking mechanism.

WARNING

Pinched or cut fingers could result if care is not taken while depressing the green lock buttons and sliding the shelf inward.

14. Release the Velcro straps which secure the RPG processor to the shelf.
15. Remove the RPG processor.
16. Place the RPG processor onto the ESD conductive mat.
17. To remove the RPG processor cover.
    a. Position the RPG processor upside–down.
    b. Using a Phillips–tip screwdriver, remove the four screws securing the RPG processor cover to the chassis.
    c. Slide the cover towards the back of the processor to disengage the cover from the cover tabs.
    d. Lift the RPG processor cover straight up.
    e. Set the RPG processor cover aside.

ESD **CAUTION** **ESD**

The Floppy Drive is an electrostatic sensitive device which requires special handling. Refer to paragraph 6.5.2.7.

18. Put ESD wrist strap on bare wrist and connect clip lead to to chassis frame or proper ground.

19. Locate the Floppy Drive (UD70A7A1A2) in the RPG processor. (Refer to Figure 6–6 for the Floppy Drive location.)

20. To remove the Floppy Drive.

    a. Disconnect and note for replacement, the Floppy Drive bus cable assembly from the Floppy Drive.

    b. Disconnect and note for replacement, the Power cable from the Floppy Drive.

    c. With a Phillips–tip screwdriver, remove the single screw securing the floppy drive bracket to the chassis. This screw is located on the side of the chassis that is closest to the mother board

    d. Remove the Floppy Drive bracket with the defective floppy drive from the chassis.

    e. Remove the 4 screws securing the defective Floppy Drive to the Floppy Drive bracket.

    f. Remove the defective floppy drive and set it onto the ESD mat.

21. To replace the Floppy Drive.

CAUTION

When reattaching the cable connectors, verify that the cable connectors are oriented properly before applying pressure. The red stripe on the bus cable must be aligned with Pin 1.

    a. Position and secure, with the 4 screws, the new Floppy Drive into the Floppy Drive bracket.

    b. Position the Floppy Drive bracket into the chassis and slide the Floppy Drive bracket toward the chassis front into position.

    c. With a Phillips–tip screwdriver, replace the single screw securing the Floppy Drive bracket to the chassis.

    d. Connect the Power cable to the Floppy Drive.

    e. Connect the Floppy Drive bus cable assembly to the Floppy Drive.

22. Remove the ESD wrist strap.

23. Reverse steps 1. through 17. to complete installation of the new Floppy Drive.

24. Turn the power switch On at the back of the RPG processor.

25. Verify proper Floppy Drive functionality IAW Figure 6–2, Note 4.

26. There are no follow–on setup procedures for this piece of equipment.

6.5.17 CD–ROM DRIVE (SUN ULTRA 10) UD70A7A1A3 REPLACEMENT PROCEDURE.

One technician is required for this procedure.

6.5.17.1 Equipment and Tools Required.

1. Screwdriver set, Phillips–tip
2. ESD Component Handling Kit

6.5.17.2 Initial Conditions/Preliminary Setup.

1. Open the RPGPCA cabinet doors and locate the RPG processor Assembly UD70A7.
2. For NWS and DoD sites to access the RPG processor:
   a. Depressing the **<Scroll Lock>** button twice on the keyboard will cause the CDE Login screen or the `Selection Menu` to appear on the monitor.
   b. If a CDE Login screen appears, continue with this step, otherwise continue to step c. Enter **raritan<CR>** for the user (no password). The `Selection Menu` will appear on the monitor.
   c. Under normal conditions, the RPG processor is `Channel 1`, the BDDS processor is `Channel 2`, and KBD Failure is `Channel 3`.
   d. Using the ↓ and ↑ keys on the keyboard highlight the RPG processor channel. Press **<CR>** to invoke the selection.

CAUTION

Failure to perform the applicable shutdown procedures in steps 3. through 7. could cause serious damage to the RPG processor.

3. Login to the CDE as a normal user, if necessary. If the RPG processor is not responding skip to step 7., otherwise continue to step 4.
4. If the PowerChute display window is open, double–click on the minus sign (–) in the upper left corner of the PowerChute display window to close the PowerChute software.
5. On the CDE Control Panel, click **EXIT ▶ OK** to log out of the CDE and return to the CDE Login screen.
6. Push the power button on the front of the RPG processor. There is no immediate response for approximately 50 seconds, then another 20 seconds to complete the shutdown. The system should shut down to an `ok` prompt.
7. At the back of the RPG processor turn the power switch to Off.

8. Place ESD conductive mat upon work surface and connect clip lead to to chassis frame or proper ground.

WARNING

Lethal voltages (from commercial power, CRTs, high−voltage power supplies, and low−voltage, high current power supplies) are present in much of the RPG Group equipment. Observe appropriate safety precautions at all times to ensure personnel safety. The maintenance technician must be familiar with the safety summary at the beginning of this document prior to performing any maintenance procedure.

6.5.17.3 Replacement Procedure.

1. FAA sites: Turn the power Off to the Monitor.
2. Turn the power Off to the Backup Storage Device.
3. Locate and disconnect the AC power cord from the back of the RPG processor.
   a. NWS and DoD: 70/170W50
   b. FAA: 70/170W61
4. Disconnect the Keyboard and Video cables from their respective ports on the RPG processor.
   a. NWS and DoD: Cable 70/170W303 and cable 70/170W303A
   b. FAA: Keyboard and Monitor cables
5. MLOS sites only: Disconnect the serial cable 70/170W257 from the Serial Port.
6. Disconnect the UPS serial cable 70/170W255 from Serial Port B.
7. Disconnect the LAN cable 70/170W201 from the Network Port <...>.
8. Disconnect cable 70/170W301 from the SCSI Card in PCI Slot 1, Port A.
9. Disconnect cable 70/170W315 from the 8−Port Serial Card in PCI Slot 3.
10. NWS sites:
    a. Disconnect serial cable 70/170W253 from the Serial Card in PCI Slot 2, Port 3.
    b. Disconnect serial cable 70/170W251 from the Serial Card in PCI Slot 2, Port 1.
11. DoD sites:
    a. Disconnect serial cable 70/170W253 from the Serial Card in PCI Slot 2, Port 3.

b. Disconnect serial cable 70/170W251 from the Serial Card in PCI Slot 2, Port 1.

c. Disconnect serial cable 70/170W250 from the Serial Card in PCI Slot 2, Port 0.

12. FAA sites:

a. Disconnect serial cable 70/170W253 from the Serial Card in PCI Slot 2, Port 3.

b. Disconnect serial cable 70/170W252 from the Serial Card in PCI Slot 2, Port 2.

c. Disconnect serial cable 70/170W251 from the Serial Card in PCI Slot 2, Port 1.

d. Disconnect serial cable 70/170W250 from the Serial Card in PCI Slot 2, Port 0.

e. Disconnect cable 70/170W302 from the DIO Card in PCI Slot 4.

13. Extend the sliding shelf the RPG processor rests on, forward, out of the RPGPCA until the RPG processor is clear of the RPGPCA. The rails on the shelf are designed to not extend any further than safely permitted.

WARNING

Until the RPG processor shelf is slid back into the RPGPCA, it represents a possible injury hazard to personnel. Use caution when standing or working near the extended shelf to prevent from striking or tripping over the shelf.

NOTE

There is a green 2–stage lock button on each side of the shelf rails, which acts as a locking mechanism when the shelf is in the outward position. To slide the shelf back into the RPGPCA these green buttons must be depressed until the shelf is slid past the locking mechanism.

WARNING

Pinched or cut fingers could result if care is not taken while depressing the green lock buttons and sliding the shelf inward.

14. Release theVelcro straps which secure the RPG processor to the shelf.

15. Remove the RPG processor.

16. Move and place the RPG processor onto the ESD conductive mat.

17. To remove the RPG processor cover.

a. Position the RPG processor upside–down.

b. Using a Phillips–tip screwdriver, remove the four screws securing the RPG processor cover to the chassis.

c. Slide the cover towards the back of the processor to disengage the cover from the cover tabs.

d. Lift the RPG processor cover straight up.

e. Set the RPG processor cover aside.

ESD **CAUTION** **ESD**

The CD−ROM Drive is an electrostatic sensitive device which requires special handling. Refer to paragraph 6.5.2.7.

18. Put ESD wrist strap on bare wrist and connect clip lead to to chassis frame or proper ground.

19. Locate the CD−ROM Drive (UD70A7A1A3) in the RPG processor. (Refer to Figure 6−6 for the CD−ROM Drive location.)

20. To remove the CD−ROM Drive.

    a. Disconnect and note for replacement, the CD−ROM Power cable connector at the back of the CD−ROM drive.

    b. Disconnect and note for replacement, the CD−ROM Drive bus cable connector at the back of the CD−ROM Drive.

    c. Disconnect and note for replacement, the CD−ROM Audio cable connector at the back of the CD−ROM Drive.

    d. With a Phillips−tip screwdriver remove the four screws, two on each side, securing the CD−ROM Drive to the CD−ROM Drive bracket.

    e. Push the CD−ROM Drive, from the rear of the CD−ROM drive, toward the chassis front for removal.

    f. Remove the defective CD−ROM and set aside onto the ESD mat.

21. To replace the CD−ROM Drive.

CAUTION

When reattaching the cable connectors, verify that the cable connectors are oriented properly before applying pressure. The red stripe on the bus cable must be aligned with Pin 1.

    a. Ensure that the new CD−ROM Drive back panel mode−select jumper is set to MA.

    b. Position the new CD−ROM Drive into the CD−ROM drive bracket.

    c. Push the new CD−ROM Drive toward the chassis rear.

d. With a Phillips–tip screwdriver, replace the four screws securing the CD–ROM Drive to the bracket.

e. Connect the CD–ROM audio cable to the analog audio port at the back of the CD–ROM Drive.

f. Connect the CD–ROM bus cable at the back of the CD–ROM Drive.

g. Connect the CD–ROM power cable at the back of the CD–ROM Drive.

22. Remove the ESD wrist strap.

23. Reverse steps 1. through 17. to complete installation of the new CD–ROM Drive.

24. Turn the power switch On at the back of the RPG processor.

25. Verify proper CD–ROM Drive functionality IAW Figure 6–2, Note 5.

26. There are no follow–on setup procedures for this piece of equipment.

6.5.18 HARD DISK (SUN ULTRA 10) UD70A7A1A4 REPLACEMENT PROCEDURE.

One technician is required for this procedure.

6.5.18.1 Equipment and Tools Required.

1. Screwdriver set, Phillips–tip

2. ESD Component Handling Kit

6.5.18.2 Initial Conditions/Preliminary Setup.

1. Open the RPGPCA cabinet doors and locate the RPG processor Assembly UD70A7.

2. For NWS and DoD sites to access the RPG processor:

   a. Depressing the **<Scroll Lock>** button twice on the keyboard will cause the CDE Login screen or the `Selection Menu` to appear on the monitor.

   b. If a CDE Login screen appears, continue with this step, otherwise continue to step c. Enter **raritan<CR>** for the user (no password). The `Selection Menu` will appear on the monitor.

   c. Under normal conditions, the RPG processor is `Channel 1`, the BDDS processor is `Channel 2`, and KBD Failure is `Channel 3`.

   d. Using the ↓ and ↑ keys on the keyboard highlight the RPG processor channel. Press **<CR>** to invoke the selection.

CAUTION

Failure to perform the applicable shutdown procedures in steps 3. through 7. could cause serious damage to the RPG processor.

3. Login to the CDE as a normal user, if necessary. If the RPG processor is not responding skip to step 7., otherwise continue to step 4.

4. If the PowerChute display window is open, double–click on the minus sign (–) in the upper left corner of the PowerChute display window to close the PowerChute software.

5. On the CDE Control Panel, click **EXIT ▶ OK** to log out of the CDE and return to the CDE Login screen.

6. Push the power button on the front of the RPG processor. There is no immediate response for approximately 50 seconds, then another 20 seconds to complete the shutdown. The system should shut down to an `ok` prompt.

7. At the back of the RPG processor turn the power switch to Off.

8. Place ESD conductive mat upon work surface and connect clip lead to to chassis frame or proper ground.

WARNING

Lethal voltages (from commercial power, CRTs, high–voltage power supplies, and low–voltage, high current power supplies) are present in much of the RPG Group equipment. Observe appropriate safety precautions at all times to ensure personnel safety. The maintenance technician must be familiar with the safety summary at the beginning of this document prior to performing any maintenance procedure.

6.5.18.3 Replacement Procedure.

1. FAA sites: Turn the power Off to the Monitor.

2. Turn the power Off to the Backup Storage Device.

3. Locate and disconnect the AC power cord from the back of the RPG processor.

   a. NWS and DoD: 70/170W50

   b. FAA: 70/170W61

4. Disconnect the Keyboard and Video cables from their respective ports on the RPG processor.

   a. NWS and DoD: Cable 70/170W303 and cable 70/170W303A

   b. FAA: Keyboard and Monitor cables

5. MLOS sites only: Disconnect the serial cable 70/170W257 from the Serial Port.

6. Disconnect the UPS serial cable 70/170W255 from Serial Port B.

7. Disconnect the LAN cable 70/170W201 from the Network Port <...>.
8. Disconnect cable 70/170W301 from the SCSI Card in PCI Slot 1, Port A.
9. Disconnect cable 70/170W315 from the 8–Port Serial Card in PCI Slot 3.
10. NWS sites:
    a. Disconnect serial cable 70/170W253 from the Serial Card in PCI Slot 2, Port 3.
    b. Disconnect serial cable 70/170W251 from the Serial Card in PCI Slot 2, Port 1.
11. DoD sites:
    a. Disconnect serial cable 70/170W253 from the Serial Card in PCI Slot 2, Port 3.
    b. Disconnect serial cable 70/170W251 from the Serial Card in PCI Slot 2, Port 1.
    c. Disconnect serial cable 70/170W250 from the Serial Card in PCI Slot 2, Port 0.
12. FAA sites:
    a. Disconnect serial cable 70/170W253 from the Serial Card in PCI Slot 2, Port 3.
    b. Disconnect serial cable 70/170W252 from the Serial Card in PCI Slot 2, Port 2.
    c. Disconnect serial cable 70/170W251 from the Serial Card in PCI Slot 2, Port 1.
    d. Disconnect serial cable 70/170W250 from the Serial Card in PCI Slot 2, Port 0.
    e. Disconnect cable 70/170W302 from the DIO Card in PCI Slot 4.
13. Extend the sliding shelf the RPG processor rests on, forward, out of the RPGPCA until the RPG processor is clear of the RPGPCA. The rails on the shelf are designed to not extend any further than safely permitted.

WARNING

Until the RPG processor shelf is slid back into the RPGPCA, it represents a possible injury hazard to personnel. Use caution when standing or working near the extended shelf to prevent from striking or tripping over the shelf.

NOTE

There is a green 2–stage lock button on each side of the shelf rails, which acts as a locking mechanism when the shelf is in the outward position. To slide the shelf back into the RPGPCA these green buttons must be depressed until the shelf is slid past the locking mechanism.

WARNING

Pinched or cut fingers could result if care is not taken while depressing the green lock buttons and sliding the shelf inward.

14. Release the Velcro straps which secure the RPG processor to the shelf.

15. Remove the RPG processor.

16. Move and place the RPG processor onto the ESD conductive mat.

17. To remove the RPG processor cover.

    a. Position the RPG processor upside–down.

    b. Using a Phillips–tip screwdriver, remove the four screws securing the RPG processor cover to the chassis.

    c. Slide the cover towards the back of the processor to disengage the cover from the cover tabs.

    d. Lift the RPG processor cover straight up.

    e. Set the RPG processor cover aside.

ESD **CAUTION** **ESD**

The Hard Disk is an electrostatic sensitive device which requires special handling. Refer to paragraph 6.5.2.7.

18. Put ESD wrist strap on bare wrist and connect clip lead to to chassis frame or proper ground.

19. Locate the Hard Disk (UD70A7A1A4) in the RPG processor. (Refer to Figure 6–6 for the Hard Disk location.)

20. To remove the Hard Disk.

    a. Disconnect and note for replacement, the power cable from the Hard Disk. Move the power cable out of the way.

    b. Disconnect and note for replacement, the Hard Disk bus cable from the Hard Disk. Move the Hard Disk bus cable out of the way.

    c. With a Phillips–tip screwdriver remove the four screws, two on each side, securing the defective Hard Disk to the Hard Disk bracket.

    d. Remove the defective Hard Disk from the Hard Disk bracket.

    e. Place the Hard Disk aside onto the ESD mat.

21. To replace the Hard Disk.

CAUTION

When reattaching the cable connectors, verify that the cable connectors are oriented properly before applying pressure. The red stripe on the bus cable must be aligned with Pin 1.

a. Ensure the back panel mode–select jumper, on the new Hard Disk is set to Cable Select (CS).

b. Position the new Hard Disk into the Hard Disk bracket. Ensure the Hard Disk is oriented correctly.

c. With a Phillips–tip screwdriver, replace the four screws securing the new Hard Disk to the Hard Disk bracket.

d. Position the Hard Disk bus cable and connect the Hard Disk bus cable to the Hard Disk.

e. Position the power cable and connect the power cable to the Hard Disk.

22. Remove the ESD wrist strap.

23. Reverse steps 1. through 17. to complete installation of the new Hard Disk.

24. Complete the setup procedure in Section 6.6, paragraph 6.6.7.

25. This completes the replacement procedure.

6.5.19 ARCHIVE STORAGE DEVICE (IOMEGA JAZ) UD70A8 AND UD70A9 REPLACEMENT PROCEDURE.

One technician is required for this procedure.

UD70A9 is an optional expansion item, and may not be at all sites.

6.5.19.1 Equipment and Tools Required.

1. Scribe

6.5.19.2 Initial Conditions/Preliminary Setup. (Refer to Figure 1–3 for the Archive Storage Device location.)

1. Open the RPGPCA cabinet doors and locate the defective Archive Storage Device UD70A8 or UD70A9.

2. For NWS and DoD sites to access the RPG processor:

a. Depressing the **<Scroll Lock>** button twice on the keyboard will cause the CDE Login screen or the `Selection Menu` to appear on the monitor.

b. If a CDE Login screen appears, continue with this step, otherwise continue to step c. Enter **raritan<CR>** for the user (no password). The `Selection Menu` will appear on the monitor.

c. Under normal conditions, the RPG processor is `Channel 1`, the BDDS processor is `Channel 2`, and KBD Failure is `Channel 3`.

d. Using the ↓ and ↑ keys on the keyboard highlight the RPG processor channel. Press **<CR>** to invoke the selection.

CAUTION

Failure to perform the applicable shutdown procedures in steps 3. through 9. could cause damage to the Archive Storage Device or the Archive III data disk.

3. Note if there is an Archive III disk in the drive. If not, proceed to step 9.

4. Login to the CDE as a normal user if necessary. For NWS sites, start a new HCI if one is not already open (**hci&<CR>** at a terminal window), and then skip to step 8.

5. In a terminal window, become a Superuser (**su<CR>**) and then the *root_password***<CR>**.

6. In the same terminal window enter **umount /jaz<CR>** to unmount the Jaz disk.

7. Eject the disk cartridge by pressing the eject button on the front of the Archive Storage Device. Skip to step 9.

8. For NWS sites on the main HCI, click on the **Archive Products** block and note if the main Archive III status is `Active` or `Idle` on the `Archive III Control/Status` window. If `Active,` click on `Auto Archive Control/Status` **Stop** for `Products` and/or `Status` as necessary until the main Archive III status returns to `Idle.` Then click on **Unmount Disk.** Disk should unmount and eject from the drive at this time.

9. At the back of the Archive Storage Device, turn the power switch to Off.

WARNING

Lethal voltages (from commercial power, CRTs, high–voltage power supplies, and low–voltage, high current power supplies) are present in much of the RPG Group equipment. Observe appropriate safety precautions at all times to ensure personnel safety. The maintenance technician must be familiar with the safety summary at the beginning of this document prior to performing any maintenance procedure.

10. Shutdown the RPG Processor UD70/170 as follows:

    a. On the CDE Control Panel, click **EXIT ▶ OK** to log out of the CDE and return to the CDE Login Screen.

b. Push the power button on the front of the RPG processor. There is no immediate response for approximately 50 seconds, then another 20 seconds to complete the shutdown. The system should shut down to an `ok` prompt.

c. At the back of the RPG processor turn the power switch to Off.

6.5.19.3 Replacement Procedure.

1. If the defective unit Archive Storage Device is UD70A8:

   a. Disconnect the AC power cord 70/170W78 from the back of the defective Archive Storage Device.

   b. Disconnect the MD68F–MD50M adapter with cable 70/170W301 from the bottom SCSI Port at the back of the Archive Storage Device.

   c. If the expansion archive storage device UD70A9 is present: disconnect cable 70/170W312 from the top SCSI Port at the back of the Archive Storage Device UD70A8.

2. If the defective unit Archive Storage Device is UD70A9:

   a. Locate and disconnect the AC power cord 70/170W79 from the back of the defective Archive Storage Device.

   b. Disconnect cable 70/170W312 from the bottom SCSI Port at the back of the Archive Storage Device.

3. Remove defective Archive Storage Device and set it aside.

4. At the back of the new Archive Storage Device, locate the ID Switch and the two buttons located at either side of the ID Switch.

5. Set the ID Switch at the back to of the Archive Storage Device. Use a small, thin tool (e.g., a scribe):

   a. For UD70A8: set to **3**, using the buttons to reach the number 3.

   b. For UD70A9: set to **4**, using the buttons to reach the number 4.

6. Below the ID Switch, locate the Termination Switch (recessed lever). Using a small, thin tool (e.g., a scribe), carefully set the Switch lever:

   a. If just a UD70A8 unit is present: set to the left side (marked with a **1** to represent termination forced On).

   b. If both UD70A8 and UD70A9 are present:

      (1) Set the UD70A9 termination switch to **1** (On) to the left side and then ensure the UD70A8 termination switch is set to **0** (Off) to the right side.

7. Reverse steps 1. through 3. to complete installation of the new Archive Storage Device.

8. Turn the power switch On at the back of the new Jaz Archive Storage Device.

9. Restore the RPG processor to operation as follows:

   a. Turn On the processor using the power switch located at the back of the processor.

   b. Log into the RPG processor as a normal user.

10. In a terminal window, become a Superuser (**su<CR>**) and then the *root_password***<CR>**.

11. If there was a disk in the drive prior to starting replacement procedure, reinsert the data disk into the new Archive Storage Device.

12. If a new disk cartridge will be used, ensure it has been formatted IAW Table 4–73.

13. Verify Jaz Drive functionality IAW Figure 6–2, Note 3.

14. NWS sites: Using the HCI, start Archive III recording if required.

15. There are no follow–on setup procedures for this equipment.

6.5.20 POWER ADMINISTRATOR UNIT (APC MASTERSWITCH) UD70A10 REPLACEMENT PROCEDURE.

One technician is required for this procedure.

6.5.20.1 Equipment and Tools Required.

1. Screwdriver set, Phillips–tip

2. Flashlight

6.5.20.2 Initial Conditions/Preliminary Setup. (Refer to Figure 1–3 for the Power Administrator location.)

1. Open the RPGPCA cabinet doors and locate the defective APC Power Administrator UD70A10. FAA sites skip to step 5.

2. For NWS and DoD sites to access the BDDS processor:

   a. Depressing the **<Scroll Lock>** button twice on the keyboard will cause the CDE Login screen or the `Selection Menu` to appear on the monitor.

   b. If a CDE Login screen appears, continue with this step, otherwise continue to step c. Enter **raritan<CR>** for the user (no password). The `Selection Menu` will appear on the monitor.

   c. Under normal conditions, the RPG processor is `Channel 1`, the BDDS processor is `Channel 2`, and KBD Failure is `Channel 3`.

d. Using the ↓ and ↑ keys on the keyboard highlight the BDDS processor channel. Press **<CR>** to invoke the selection.

3. NWS and DoD sites: At the BDDS processor:

   a. If at a CDE Login screen, skip to step c.

   b. If within CDE, click **EXIT ▶ OK** to log out and return to the CDE Login screen.

   c. Push the power button on the front of the BDDS processor. Wait about 20 seconds for the shutdown to complete. The system should shut down to an `ok` prompt.

   d. At the back of the BDDS processor turn the power switch to Off.

4. For NWS and DoD sites to access the RPG processor:

   a. Depressing the **<Scroll Lock>** button twice on the keyboard will cause the CDE Login screen or the `Selection Menu` to appear on the monitor.

   b. If a CDE Login screen appears, continue with this step, otherwise continue to step c. Enter **raritan<CR>** for the user (no password). The `Selection Menu` will appear on the monitor.

   c. Under normal conditions, the RPG processor is `Channel 1`, the BDDS processor is `Channel 2`, and KBD Failure is `Channel 3`.

   d. Using the ↓ and ↑ keys on the keyboard highlight the RPG processor channel. Press **<CR>** to invoke the selection.

5. At the RPG processor:

CAUTION

Failure to perform the applicable shutdown procedures in step 5. through 7. could cause serious damage to the RPG processor and Communication Servers.

   a. Login to the CDE as a normal user, if necessary.

   b. If the PowerChute display window is open, double–click on the minus sign (–) in the upper left corner of the PowerChute display window to close the PowerChute software.

   c. On the CDE Control Panel, click **EXIT ▶ OK** to log out of the CDE and return to the CDE Login screen.

   d. Push the power button on the front of the RPG processor. There is no immediate response for approximately 50 seconds, then another 20 seconds to complete the shutdown. The system should shut down to an `ok` prompt.

e. At the back of the RPG processor turn the power switch to Off.

6. At the back of the Router UD70A2 turn the power switch Off.

7. At the back of the three Communication Servers UD70A15, A16, A17 turn the power switch Off.

WARNING

Lethal voltages (from commercial power, CRTs, high−voltage power supplies, and low−voltage, high current power supplies) are present in much of the RPG Group equipment. Observe appropriate safety precautions at all times to ensure personnel safety. The maintenance technician must be familiar with the safety summary at the beginning of this document prior to performing any maintenance procedure.

6.5.20.3 Replacement Procedure.

NOTE

The Power Administrator has it outlets numbered from right to left when being viewed from the rear.

1. Locate and disconnect the Power Administrator AC power cord from the UPS.

2. NWS and DoD: Disconnect the following power cords at the back of the Power Administrator. FAA sites skip to step 3.

   a. Disconnect the RPG processor power cord 70/170W50 from Outlet 1.

   b. Disconnect the LAN Switch power cord 70/170W51 from Outlet 2.

   c. Disconnect the Router power cord 70/170W52 from Outlet 3.

   d. Disconnect the Communication Server A power cord 70/170W53 from Outlet 4.

   e. Disconnect the RPG/RDA Gateway power cord 70/170W54 from Outlet 5.

   f. Disconnect the BDDS processor power cord 70/170W55 from Outlet 6.

   g. Disconnect the Communication Server B power cord 70/170W56 from Outlet 7.

   h. Disconnect the Communication Server C power cord 70/170W57 from Outlet 8.

   i. Skip to step 4.

3. For FAA sites, disconnect the following power cords at the back of the Power Administrator. All these power cords are leading from the RMS Power Administrator A and B.

   a. Disconnect 70/170W60 from Outlet 1.

b. Disconnect 70/170W62 from Outlet 2.

c. Disconnect 70/170W64 from Outlet 3.

d. Disconnect 70/170W66 from Outlet 4.

e. Disconnect 70/170W68 from Outlet 5.

f. Disconnect 70/170W70 from Outlet 6.

g. Disconnect 70/170W72 from Outlet 7.

h. Disconnect 70/170W74 from Outlet 8.

4. At the front of the Power Administrator:

   a. Disconnect the LAN cable 70/170W209 from the 10Base–T port.

   b. Disconnect the Router cable adapter CP14 with attached cable 70/170W254 from the Serial Port.

5. Support the Power Administrator while removing the screws and washers that secure the Power Administrator to the cabinet mounting rails.

6. Slide the defective Power Administrator out of the RPGPCA cabinet and set it aside.

7. If not provided with the new Power Administrator, remove the mounting brackets from the defective Power Administrator.

8. Place L–shaped mounting brackets at the sides of the new Power Administrator using the 4 supplied screws and a Phillips–tip screwdriver. Attach the mounting brackets to the new Power Administrator in an identical manner as the defective Power Administrator.

9. Reverse steps 1. through 6. to complete installation of the new Power Administrator.

10. Turn On the power switch to each of the three Communication Servers UD70A15, A16, A17.

11. Turn On the power switch to the Router UD70A2.

12. Turn On the RPG and BDDS (NWS and DoD sites) processors using the power switch located at the back of each processor.

13. Log into the RPG processor as a normal user.

14. NWS and DoD sites: The BDDS processor software starts automatically.

15. For setup procedures of the Power Administrator see paragraph 6.6.8.

6.5.21 UPS ASSEMBLY (APC 1400) UD70A11 REPLACEMENT PROCEDURE.

Two technicians are required for this procedure.

6.5.21.1 Equipment and Tools Required.

1. Screwdriver set, Phillips–tip
2. Flashlight

6.5.21.2 Initial Conditions/Preliminary Setup. (Refer to Figure 1–3 for the UPS location.)

1. Open the RPGPCA cabinet doors and locate the defective UPS Assembly UD70A11. FAA sites, skip to step 5.
2. For NWS and DoD sites to access the BDDS processor:
   a. Depressing the **<Scroll Lock>** button twice on the keyboard will cause the CDE Login screen or the `Selection Menu` to appear on the monitor.
   b. If a CDE Login screen appears, continue with this step, otherwise continue to step c. Enter **raritan<CR>** for the user (no password). The `Selection Menu` will appear on the monitor.
   c. Under normal conditions, the RPG processor is `Channel 1`, the BDDS processor is `Channel 2`, and KBD Failure is `Channel 3`.
   d. Using the ↓ and ↑ keys on the keyboard highlight the BDDS processor channel. Press **<CR>** to invoke the selection.
3. NWS and DoD sites: At the BDDS processor:
   a. If at a CDE Login screen, skip to step c.
   b. If within CDE, click **EXIT ▶ OK** to log out and return to the CDE Login screen.
   c. Push the power button on the front of the BDDS processor. Wait about 20 seconds for the shutdown to complete. The system should shut down to an `ok` prompt.
   d. At the back of the BDDS processor turn the power switch to Off.
4. For NWS and DoD sites to access the RPG processor:
   a. Depressing the **<Scroll Lock>** button twice on the keyboard will cause the CDE Login screen or the `Selection Menu` to appear on the monitor.
   b. If a CDE Login screen appears, continue with this step, otherwise continue to step c. Enter **raritan<CR>** for the user (no password). The `Selection Menu` will appear on the monitor.
   c. Under normal conditions, the RPG processor is `Channel 1`, the BDDS processor is `Channel 2`, and KBD Failure is `Channel 3`.

d. Using the ↓ and ↑ keys on the keyboard highlight the RPG processor channel. Press **<CR>** to invoke the selection.

5. At the RPG processor:

CAUTION

Failure to perform the applicable shutdown procedures in steps 5. through 10. could cause serious damage to the RPGPCA equipment.

a. Login to the CDE as a normal user, if necessary.

b. If the PowerChute display window is open, double–click on the minus sign (–) in the upper left corner of the PowerChute display window to close the PowerChute software.

c. On the CDE Control Panel, click **EXIT ▶ OK** to log out of the CDE and return to the CDE Login screen.

d. Push the power button on the front of the RPG processor. There is no immediate response for approximately 50 seconds, then another 20 seconds to complete the shutdown. The system should shut down to an `ok` prompt.

e. At the back of the RPG processor turn the power switch to Off.

6. NWS and DoD sites: Turn Off the power switch to the KVM Switch UD70A3.

7. Turn Off the power switch to the Router UD70A2.

8. Turn Off the power switch at each of the Communications Servers UD70A15, A16, A17.

9. Turn Off the power switch to the Archive Storage Device(s) UD70A8 and UD70A9 (if present).

10. At the front of the RPGPCA UPS, press the (0) power switch to Off.

WARNING

Lethal voltages (from commercial power, CRTs, high–voltage power supplies, and low–voltage, high current power supplies) are present in much of the RPG Group equipment. Observe appropriate safety precautions at all times to ensure personnel safety. The maintenance technician must be familiar with the safety summary at the beginning of this document prior to performing any maintenance procedure.

6.5.21.3 Replacement Procedure.

1. Locate and disconnect the UPS power cord from J1 on the AC Power Distribution Panel (UD70A22).
2. At the front of the UPS, remove the front cover panel and set aside.
3. Using the pull−rope supplied, disconnect the battery module connector from the UPS.
4. Locate and disconnect the Power Administrator power cord from the UPS.
5. NWS and DoD sites: Disconnect the KVM Switch power cord 70/170W77 from the UPS.
6. Disconnect the Archive Storage Device power cord 70/170W78 from the UPS.
7. Disconnect the Archive Storage Device (expansion) power cord 70/170W79 (if present) from the UPS.
8. Disconnect the LAN cable 70/170W208 from 10Base−T port at the back of the UPS.
9. Disconnect the 70/170W255 serial cable from the Serial port at the back of the UPS.
10. Remove the screws and washers that attach the UPS to the cabinet. The UPS is mounted on sliding rails and will be supported.

WARNING

The weight of the UPS is approximately 63 pounds. Ensure a second technician is available to help support the weight, and assist with moving the UPS when it is disengaged from the support rails.

11. With a second technician assisting, slide the UPS forward on the support rails. Continue to slide the UPS out of the cabinet. The UPS will detach from the support rails when the rails are fully extended.
12. With a second technician assisting, set the defective UPS unit aside.
13. Replace the front cover on the defective UPS removed earlier when disconnecting the battery module.
14. If mounting brackets are not provided, remove the mounting brackets from the defective UPS for reuse.
15. Attach mounting brackets in an identical manner as the defective UPS to the new UPS.
16. Reverse steps 1. through 12. to complete installation of the new UPS.
17. Remove the front cover of the new UPS.

18. Plug the battery module connector into the UPS connector. Press firmly to ensure connection is complete. A “snap” will be heard when the connector is properly seated.

19. Replace the front cover to the UPS.

20. At the front of the UPS, press the (1/Test) power switch On to the UPS.

21. Turn the power switch On to the Archive Storage Device(s) UD70A8 and UD70A9 (if present).

22. Turn the power switch On to each of the Communication Servers UD70A15, A16, A17.

23. Turn the power switch On to the Router UD70A2.

24. NWS and DoD sites: Turn the power switch On to the KVM Switch UD70A3

25. NWS and DoD sites: Wait 1 minute for the KVM to complete its self–test. This can be observed on the KVM Switch LED.

26. Turn power On to the RPG and BDDS (NWS and DoD sites) processors using the power switch located at the back of each processor.

27. Log into the RPG processor as a normal user.

28. NWS and DoD sites: The BDDS processor software starts automatically.

29. For setup procedures of the UPS see paragraph 6.6.9.

6.5.22 UPS AP9606 WEB/SNMP MANAGEMENT CARD (LAN INTERFACE MODULE) UD70A11A2 REPLACEMENT PROCEDURE.

One technician is required for this procedure.

6.5.22.1 Equipment and Tools Required.

1. Screwdriver set, Phillips–tip

2. ESD Component Handling Kit

3. Flashlight

6.5.22.2 Initial Conditions/Preliminary Setup.

1. Open the rear RPGPCA cabinet doors and locate the UPS LAN Interface Module UD70A11A2 at the back of the UPS Assembly UD70A11. FAA sites skip to step 5.

2. For NWS and DoD sites to access the BDDS processor:

   a. Depressing the **<Scroll Lock>** button twice on the keyboard will cause the CDE Login screen or the `Selection Menu` to appear on the monitor.

b. If a CDE Login screen appears, continue with this step, otherwise continue to step c. Enter **raritan<CR>** for the user (no password). The `Selection Menu` will appear on the monitor.

c. Under normal conditions, the RPG processor is `Channel 1`, the BDDS processor is `Channel 2`, and KBD Failure is `Channel 3`.

d. Using the ↓ and ↑ keys on the keyboard highlight the BDDS processor channel. Press **<CR>** to invoke the selection.

3. NWS and DoD sites: At the BDDS processor:

a. If at a CDE Login screen, skip to step c.

b. If within CDE, click **EXIT ▶ OK** to log out and return to the CDE Login screen.

c. Push the power button on the front of the BDDS processor. Wait about 20 seconds for the shutdown to complete. The system should shut down to an `ok` prompt.

d. At the back of the BDDS processor turn the power switch to Off.

4. For NWS and DoD sites to access the RPG processor:

a. Depressing the **<Scroll Lock>** button twice on the keyboard will cause the CDE Login screen or the `Selection Menu` to appear on the monitor.

b. If a CDE Login screen appears, continue with this step, otherwise continue to step c. Enter **raritan<CR>** for the user (no password). The `Selection Menu` will appear on the monitor.

c. Under normal conditions, the RPG processor is `Channel 1`, the BDDS processor is `Channel 2`, and KBD Failure is `Channel 3`.

d. Using the ↓ and ↑ keys on the keyboard highlight the RPG processor channel. Press **<CR>** to invoke the selection.

5. At the RPG processor:

CAUTION

Failure to perform the applicable shutdown procedures in steps 5. through 10. could cause serious damage to RPGPCA components.

a. Login to the CDE as a normal user, if necessary.

b. If the PowerChute display window is open, double–click on the minus sign (**–**) in the upper left corner of the PowerChute display window to close the PowerChute software.

c. On the CDE Control Panel, click **EXIT ▶ OK** to log out of the CDE and return to the CDE Login screen.

d. Push the power button on the front of the RPG processor. There is no immediate response for approximately 50 seconds, then another 20 seconds to complete the shutdown. The system should shut down to an `ok` prompt.

e. At the back of the RPG processor turn the power switch to Off.

6. NWS and DoD sites: Turn Off the power switch to the KVM Switch UD70A3.

7. Turn Off the power switch to the Router UD70A2.

8. Turn Off the power switch at each of the Communications Servers UD70A15, A16, A17.

9. Turn Off the power switch to the Archive Storage Device(s) UD70A8 and UD70A9 (if present).

10. At the front of the UPS, press the (0) power switch to Off.

WARNING

Lethal voltages (from commercial power, CRTs, high–voltage power supplies, and low–voltage, high current power supplies) are present in much of the RPG Group equipment. Observe appropriate safety precautions at all times to ensure personnel safety. The maintenance technician must be familiar with the safety summary at the beginning of this document prior to performing any maintenance procedure.

6.5.22.3 Replacement Procedure.

1. Locate and disconnect the UPS AC power cord from the AC Power Distribution Panel (UD70A22).

2. At the back of the UPS, disconnect the LAN cable 70/170W208 from 10Base–T port.

3. At the front of the UPS, remove the front cover panel and set aside.

4. Using the pull–rope supplied, disconnect the battery module connector from the UPS.

ESD **CAUTION** **ESD**

The LAN Interface Module is an electrostatic sensitive device which requires special handling. Refer to paragraph 6.5.2.7.

5. Put ESD wrist strap on bare wrist and connect clip lead to to chassis frame or proper ground at the back of the UPS.

6. Remove the defective LAN Interface Module.
   a. With a Phillips–tip screwdriver, remove the two screws securing the defective LAN Interface Module to the UPS chassis.

CAUTION

To avoid damaging the card's connector, apply force evenly to both sides of the LAN Interface Module.

   b. Grasp the two sides of the LAN Interface Module and pull the card straight out from the UPS chassis.
   c. Place the defective LAN Interface Module aside onto an ESD mat.
7. Replace the LAN Interface Module.
   a. Position the new LAN Interface Module into the chassis slot.
   b. Push the LAN Interface Module into the UPS chassis until the LAN Interface Module is fully seated.
   c. With a Phillips–tip screwdriver, replace the two screws securing the new LAN Interface Module to the UPS chassis.
8. Remove the ESD wrist strap.
9. Plug the battery module connector into the UPS connector. Press firmly to ensure connection is complete. A "snap" will be heard when the connector is properly seated.
10. Replace the front cover onto the UPS.
11. Reverse steps 1. and 2. to complete installation of the new LAN Interface Module.
12. Turn the power switch On to the UPS.
13. Turn the power switch On to the Archive Storage Device(s) UD70A8 and UD70A9 (if present).
14. Turn the power switch On to each of the Communication Servers UD70A15, A16, A17.
15. Turn the power switch On to the Router UD70A2.
16. NWS and DoD sites: Turn the power switch On to the KVM Switch UD70A3.
17. NWS and DoD sites: Wait 1 minute for the KVM to complete its self–test. This can be observed on the KVM Switch LED.
18. Turn On the RPG and BDDS (NWS and DoD sites) processors using the power switch located at the back of each processor.

19. Log into the RPG processor as a normal user.

20. NWS and DoD sites: The BDDS processor software starts automatically.

21. This completes the replacement procedure.

6.5.23 UPS BATTERY MODULE (APC RPC24) UD70A11A1BT1 REPLACEMENT PROCEDURE.

One technician is required for this procedure.

The Battery Module is a “hot–swappable” item.

6.5.23.1 Equipment and Tools Required.

1. Screwdriver set, Phillips–tip
2. Flashlight

6.5.23.2 Initial Conditions/Preliminary Setup. (Refer to Figure 1–3 for the UPS location.)

1. Open the front RPGPCA cabinet doors and locate the UPS Assembly UD70A11.

WARNING

Lethal voltages (from commercial power, CRTs, high–voltage power supplies, and low–voltage, high current power supplies) are present in much of the RPG Group equipment. Observe appropriate safety precautions at all times to ensure personnel safety. The maintenance technician must be familiar with the safety summary at the beginning of this document prior to performing any maintenance procedure.

6.5.23.3 Replacement Procedure.

1. At the front of the UPS, remove the front cover panel and set aside.
2. Using the pull–rope supplied, disconnect the defective battery module connector from the UPS.
3. Remove the 4 screws that secure the defective battery module to the UPS.
4. Use the battery module handle on the front to pull the defective battery module out of the UPS until it is stopped by the stop tab.
5. Lift the battery module to clear the stop tab and remove the defective battery module from the UPS and set it aside.
6. Align the new battery module with its opening and slide the battery module into the UPS.

7. Replace the 4 screws which secure the battery module to the UPS.
8. Remove the tape , if necessary, from the battery module connector.
9. Plug the battery module connector into the UPS connector. Press firmly to ensure connection is complete. A “snap” will be heard when the connector is properly seated.
10. Replace the front cover of the UPS.
11. Ensure the Replace Battery LED changes back to a normal status. See Figure 4–22 and accompanying Table 4–15.
12. This completes the replacement procedure.

6.5.24 RDA/RPG GATEWAY (POLYCOM 505–0081) UD70A12 REPLACEMENT PROCEDURE.

Two technicians are required for this procedure.

6.5.24.1 Equipment and Tools Required.

1. Screwdriver set, Phillips–tip

6.5.24.2 Initial Conditions/Preliminary Setup. (Refer to Figure 1–3 for the RDA/RPG Gateway location.)

1. Open the RPGPCA cabinet doors and locate the defective RDA/RPG Gateway UD70A12.

WARNING

Lethal voltages (from commercial power, CRTs, high–voltage power supplies, and low–voltage, high current power supplies) are present in much of the RPG Group equipment. Observe appropriate safety precautions at all times to ensure personnel safety. The maintenance technician must be familiar with the safety summary at the beginning of this document prior to performing any maintenance procedure.

6.5.24.3 Replacement Procedure.

1. Locate and disconnect the AC power cord from the back of the RDA/RPG Gateway.
   a. NWS and DoD: Cable 70/170W54
   b. FAA: Cable 70/170W69
2. Disconnect the LAN cable 70/170W206 from the 10Base–T LAN Port at the back of the RDA/RPG Gateway.

3. Disconnect the T1 cable 70/170W256 from the WAN B Port at the back of the RDA/RPG Gateway.
4. With a second technician supporting the RDA/RPG Gateway, remove the screws and washers securing the RDA/RPG Gateway to the cabinet mounting rails.
5. Remove the defective RDA/RPG Gateway from the UD70 cabinet and set it aside.
6. If mounting brackets are not provided, remove the mounting brackets from the defective RDA/RPG Gateway for reuse.
7. Secure the mounting brackets to the new RDA/RPG Gateway in the same manner that the defective RDA/RPG Gateway had the brackets installed.
8. Reverse steps 1. through 5. to complete installation of the new RDA/RPG Gateway.
9. There are no follow–on setup procedures for this piece of equipment.
10. This completes the replacement procedure.

6.5.25 LAN SWITCH (CISCO 2924) UD70A13 REPLACEMENT PROCEDURE.

Two technicians are required for this procedure.

6.5.25.1 Equipment and Tools Required.

1. Screwdriver set, Phillips–tip
2. Step Stool

6.5.25.2 Initial Conditions/Preliminary Setup. (Refer to Figure 1–3 for the LAN Switch location.)

NOTE

Refer to paragraph 6.5.2 for special consideration for replacement procedures.

3. Open the RPGPCA cabinet doors and locate the defective LAN Switch UD70A13.

WARNING

Lethal voltages (from commercial power, CRTs, high–voltage power supplies, and low–voltage, high current power supplies) are present in much of the RPG Group equipment. Observe appropriate safety precautions at all times to ensure personnel safety. The maintenance technician must be familiar with the safety summary at the beginning of this document prior to performing any maintenance procedure.

6.5.25.3 Replacement Procedure.

1. Locate and disconnect the AC power cord from the back of the LAN Switch.
   a. NWS and DoD: Disconnect 70/170W51.
   b. FAA: Disconnect 70/170W63.
2. At the back of the LAN switch, disconnect cable 70/170W315B from the CONSOLE port.
3. To fully access the LAN Switch, disconnect the screws attaching the Dial Patch Panel (UD70A23) to the chassis and allow the Dial Patch Panel to hang and rest against the outside of the chassis.

NOTE

Ensure the cables in the next step are labeled for reinstallation at the end of this procedure.

4. Disconnect the LAN cables 70/170W201 through 70/170219, as appropriate.
   a. NWS and DoD:
      (1) Disconnect the RPG processor (Network <...>) LAN cable 70/170W201 from port 1.
      (2) NWS only: Disconnect the I/O panel CP10 LAN cable 70/170W202 from port 2.
      (3) Disconnect the Router LAN cable 70/170W203 from port 3.
      (4) Disconnect the BDDS (Network <...>) LAN cable 70/170W204 from port 4.
      (5) Disconnect the RDA/RPG Gateway LAN cable 70/170W206 from port 6.
      (6) Disconnect the UPS LAN cable 70/170W208 from port 8.
      (7) Disconnect the Power Administrator LAN cable 70/170W209 from port 9.
      (8) Disconnect the BDDS (PCI 1) LAN cable 70/170W212 from port 12.
      (9) Disconnect the I/O panel CP2 LAN cable 70/170W213 from port 13.
      (10) Disconnect the I/O panel CP3 LAN cable 70/170W214 from port 14.
      (11) Disconnect the I/O panel CP4 LAN cable 70/170W215 from port 15.
      (12) Disconnect the I/O panel CP5 LAN cable 70/170W216 from port 16.
      (13) Disconnect Communication Server A LAN cable 70/170W217 from port 17.
      (14) Disconnect Communication Server B LAN cable 70/170W218 from port 18.

(15) Disconnect Communication Server C LAN cable 70/170W219 from port 19.

b. FAA:

(1) Disconnect the RPG processor (Network <...>) LAN cable 70/170W201 from port 1.

(2) Disconnect the Router LAN cable 70/170W203 from port 3.

(3) Disconnect the RDA/RPG Gateway LAN cable 70/170W206 from port 6.

(4) Disconnect the I/O panel CP8 LAN cable 70/170W207 from port 7.

(5) Disconnect the UPS LAN cable 70/170W208 from port 8.

(6) Disconnect the Power Administrator LAN cable 70/170W209 from port 9.

(7) Disconnect the RMS Power Administrator Unit A LAN cable 70/170W210 from port 10.

(8) Disconnect the RMS Power Administrator Unit B LAN cable 70/170W211 from port 11.

(9) Disconnect Communication Server A LAN cable 70/170W217 from port 17.

(10) Disconnect Communication Server B LAN cable 70/170W218 from port 18.

(11) Disconnect Communication Server C LAN cable 70/170W219 from port 19.

5. With a second technician supporting the LAN Switch, remove the 4 screws and washers securing the LAN Switch to the cabinet mounting rails.

6. While the second technician supports the LAN Switch, remove one of the mounting rails from the LAN Switch to allow clearance for removal.

7. Remove and set aside the defective LAN Switch from the UD70 cabinet.

8. If mounting brackets are not provided with the new LAN Switch, remove the mounting brackets from the defective LAN Switch for reuse.

9. Attach only one mounting bracket to the LAN Switch.

10. Reverse steps 1. through 7. to complete installation of the new LAN Switch.

11. For setup procedures see paragraph 6.6.10.

6.5.26 DIAL AND DEDICATED PORT (RACK–MOUNTED) MODEM (CODEX 3262 AND 3263) UD70A14A1–A21 REPLACEMENT.

One technician is needed for this procedure.

6.5.26.1 Equipment and Tools Required.

1. ESD Component Handling Kit

6.5.26.2 Initial Conditions/Preliminary Setup. (Refer to Figure 1–3 for Dedicated/Dial Modem Rack Assembly location.)

NOTE

Read paragraph 6.5.2 for special considerations for replacement procedures.

1. Open the RPGPCA cabinet doors and locate the Dedicated/Dial Modem Rack Assembly UD70A14.

2. Insert key into lock on modem rack door, turn key to unlock, and fully swing out modem rack door.

6.5.26.3 Replacement Procedure.

ESD **CAUTION** **ESD**

All WSR–88D printed circuit cards are electrostatic sensitive devices which require special handling. Refer to paragraph 6.5.2.7.

1. Put ESD wrist strap on bare wrist and connect clip lead to chassis frame or proper ground.

NOTE

Modem cards can be removed and installed while power is On and software is running.

2. Remove defective modem card from the enclosure by rotating the card ejectors simultaneously at the top and bottom of each modem that hold the card in place and carefully sliding the card out from the enclosure as shown in Figure 6–7.

3. See Figure 6–8. Check/set the DIP switches at the replacement modem as follows:

   a. 3262: 1,2,7, and 8 are On, all others are Off.

   b. 3263: 1 and 2 are On, all others are Off.

4. Install replacement unit by sliding card into enclosure while ejectors are in position (A) as shown in Figure 6–7. When the modem card makes contact with the ejectors, swing ejectors inward toward the card and press to ensure proper seating of the card.

5. Refer to Section 6.6 for specific setup procedures as follows:
   Paragraph 6.6.11 for Dial Port Modems UD70A14A1–A3A
   (connected to X.25 Comm Server A15),
   Paragraph 6.6.12 for the Dial Port Modems UD70A14A3B – A4B
   (connected to Router PPP Serial Card A2A1A2),
   Paragraph 6.6.13 for the Dedicated Port AWIPS Modem UD70A14A5
   Paragraph 6.6.14 for the Dedicated Port Modems UD70A14A6–A16
   Paragraph 6.6.17 for the Dedicated Port Distant MSCF Modem UD70A14A21
   (DoD/FAA sites without Frame Relay service only), or
   Paragraph 6.6.16 for the Dedicated PPP OPUP Port Modems UD70A14A17–A20
   and A21 (NWS only)

   The AWIPS and Distant MSCF modems are only found at DoD and FAA sites. The AWIPS modem will be in slot #5 and the Distant MSCF modem will be in slot # 21 (if installed).

6. Remove the ESD wrist strap and remove the clip lead from chassis frame.

7. Close and lock the modem rack assembly door. Remove the key from the lock.

8. Close the UD70 cabinet front door.

9. This completes the replacement procedure.

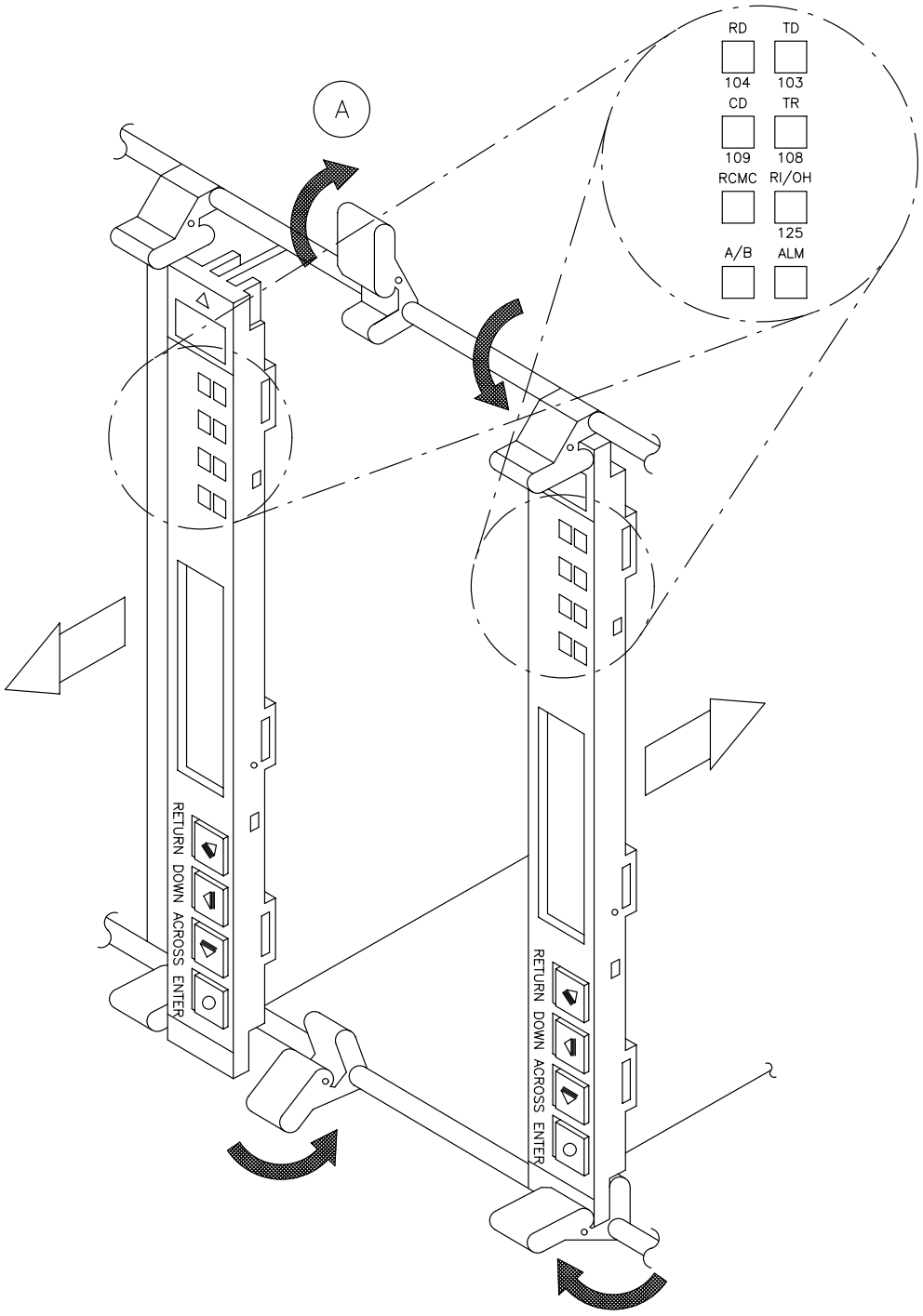

NX1646

Figure 6–7. Dial and Dedicated Modem Card Removal and Replacement

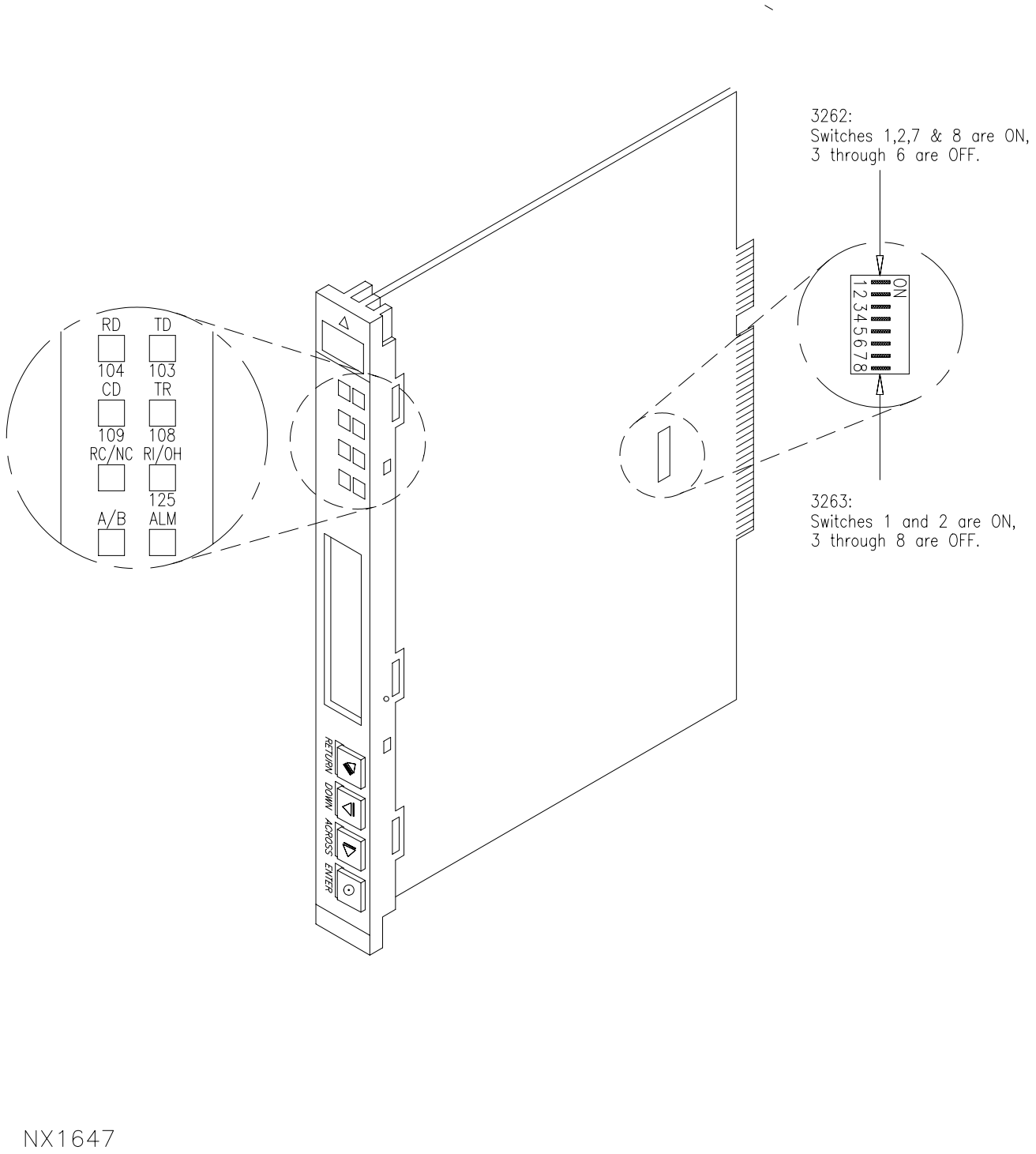

Figure 6–8. Dial and Dedicated Port (Rack–Mounted) Modem, Front Panel and DIP Switch Location

6.5.27 DEDICATED/DIAL MODEM RACK (CODEX 326x) UD70A14PS1,PS2, POWER SUPPLY/FAN MODULE UD70A14B1 ASSEMBLIES REPLACEMENT.

One technician is needed for this procedure.

There are two types of modules mounted underneath the modem cards inside the Dedicated/Dial Modem Rack Assembly: a Power Supply Module and a Fan Module. The two types of modules are both shaped identically and both have the same type of fan mounted to their front. While they are in the rack, they can be distinguished as follows. The Fan Modules each have one green LED that is located inside the fan assembly, to the right, just behind the fan's propellers. The Power Supply Module has two LEDs in the same location.

6.5.27.1 Equipment and Tools Required.

1. Screwdriver set, flat–tip
2. Screwdriver set, Phillips–tip
3. Wrench, 1/4–inch, open end
4. Wrench set, adjustable

6.5.27.2 Initial Conditions/Preliminary Setup. (Refer to Figure 1–3 Dedicated/Dial Modem Rack Assembly location.)

NOTE

Read paragraph 6.5.2 for special considerations for replacement procedures.

1. Open the UD70 cabinet doors and locate the Dedicated/Dial Modem Rack Assembly UD70A14.
2. Unlock the modem rack assembly door and fully swing out the dedicated/dial modem rack door.
3. Save all modem configurations by following the procedure below.

   a. Press the **<RETURN>** button twice to return to the home screen.

   b. Press the **<ACROSS>** button until the display reads
   `Save Changes=#`
   Where # is dependent on the specific modem.

   c. Press the **<ENTER>** button and wait until the display reads
   `Save Completed!`

   d. Press the **<RETURN>** button twice to return to the home screen.

4. Disconnect the AC power cord from the back of the rack assembly.

6.5.27.3 Replacement Procedure.

1. Locate the two spring loaded hinge pins that hold the door in place. (See Figure 6–9).
2. Squeeze the pins toward each other until they are free.
3. Remove the door.
4. Insert a flat–tip screwdriver into the locking tabs at the right side of the selected Power Supply/Fan Module handle, as shown in Figure 6–10.
5. Gently push tab to the right while gently pulling on the selected Power Supply/Fan Module handle until the handle tab “clicks” out from its notch; then, remove screwdriver.
6. Repeat steps 4. and 5. for the left locking tab, pushing the tab to the left.
7. Pull out Power Supply/Fan Module.
8. Remove from the Fan from the Module by unplugging the fan leads from the module and then removing the four nuts and bolts located at the four corners of the fan, using the appropriate wrench and screwdriver.
9. Reverse step 8. to reattach.
10. To replace the Power Supply/Fan Module back into the modem rack push it into its slot until it locks into position.
11. Reconnect the AC power cord to back of the rack.
12. Replace the dedicated/dial modem rack door by squeezing hinge pins toward each other, align door in the fully open position, and release pins.
13. Close and lock door.
14. This completes the replacement procedure.

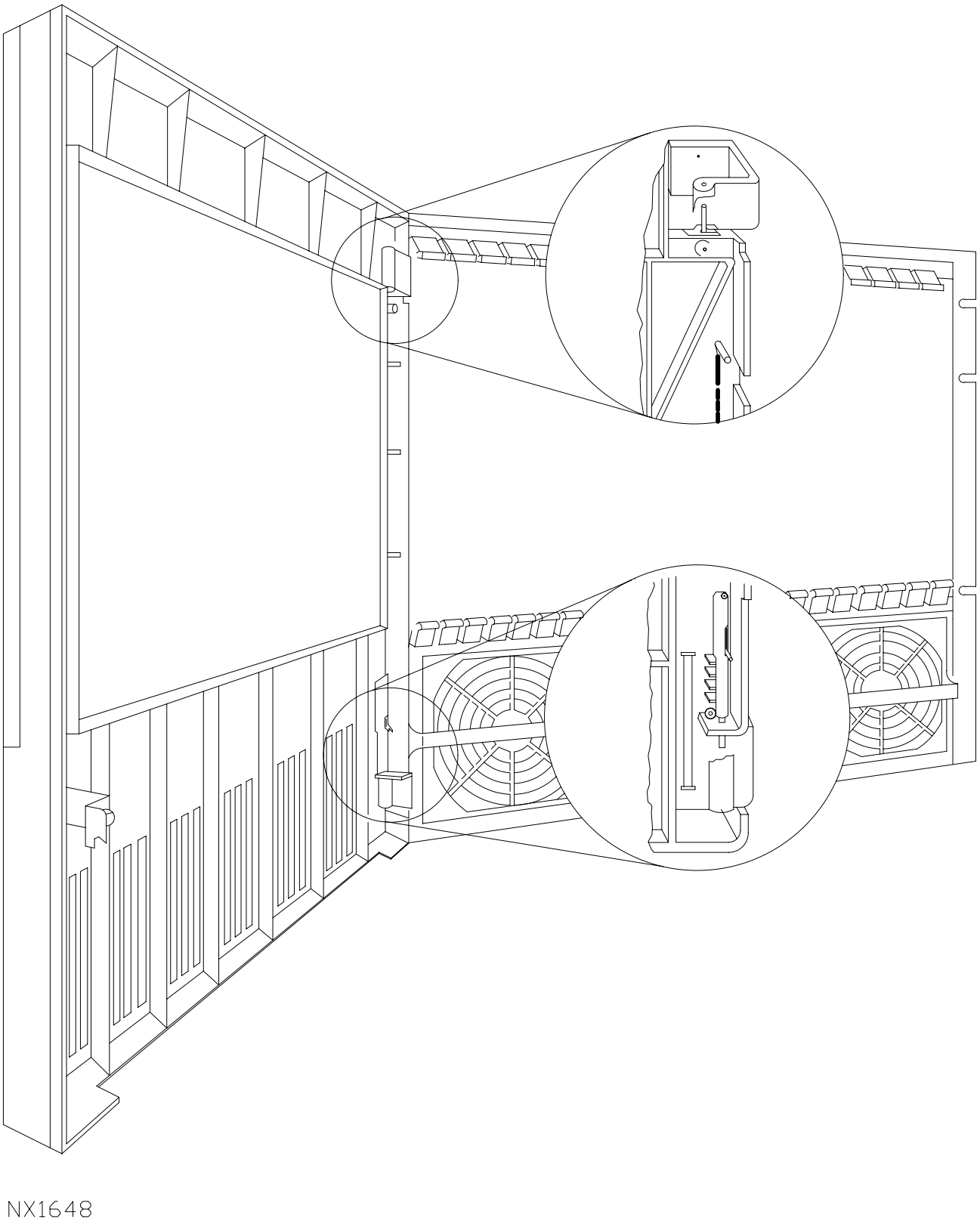

Figure 6–9. Dedicated/Dial Modem Rack Front Door Hinge Detail

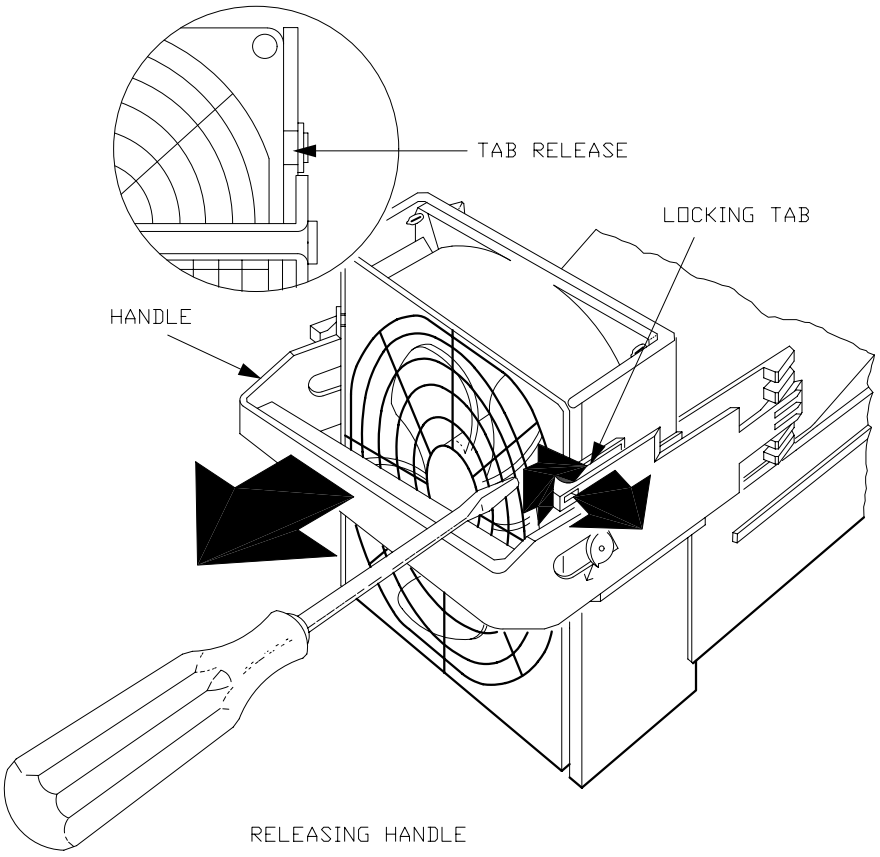

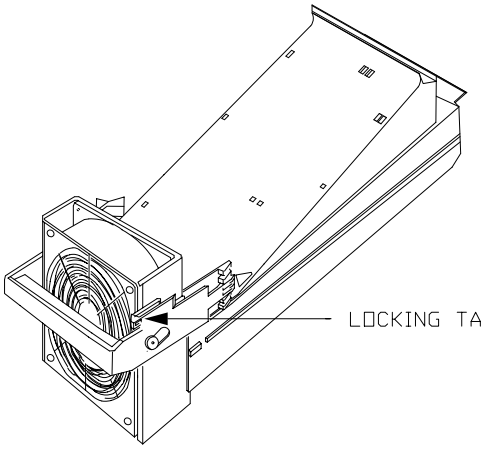

NX1649

POWER SUPPLY/FAN MODULE

Figure 6–10. Dedicated/Dial Modem Rack (Codex 326x) Power Supply/Fan Module Removal

6.5.28 COMMUNICATION SERVER A, B, AND C (PTI MPS 800) UD70A15, UD70A16, UD70A17 REPLACEMENT PROCEDURE.

Two technicians are required for this procedure.

6.5.28.1 Equipment and Tools Required.

1. Screwdriver set, Phillips–tip
2. Screwdriver set, flat tip

6.5.28.2 Initial Conditions/Preliminary Setup. (Refer to Figure 1–3 for the Communication Server location.)

1. Open the RPGPCA cabinet doors and locate the defective Communication Server:
   a. Communication Server A: UD70A15
   b. Communication Server B: UD70A16
   c. Communication Server C: UD70A17

CAUTION

Failure to perform step 2. could cause serious damage to the Communication Server.

2. At the rear of the defective Communication Server, turn the power switch to Off.

WARNING

Lethal voltages (from commercial power, CRTs, high–voltage power supplies, and low–voltage, high current power supplies) are present in much of the RPG Group equipment. Observe appropriate safety precautions at all times to ensure personnel safety. The maintenance technician must be familiar with the safety summary at the beginning of this document prior to performing any maintenance procedure.

6.5.28.3 Replacement Procedure.

1. Disconnect the AC power cord from the defective Communication Server.
   a. NWS and DoD:
      (1) Communication Server A: 70/170W53
      (2) Communication Server B: 70/170W56
      (3) Communication Server C: 70/170W57

b. FAA:

(1) Communication Server A: 70/170W67

(2) Communication Server B: 70/170W73

(3) Communication Server C: 70/170W75

2. Disconnect the LAN cable from the TX port at the back of the defective Communication Server.

a. Communication Server A: 70/170W217

b. Communication Server B: 70/170W218

c. Communication Server C: 70/170W219

3. Disconnect the serial cable from the CONSOLE port at the back of the defective Communication Server:

a. Communication Server A: 70/170W315F

b. Communication Server B: 70/170W315G

c. Communication Server C: 70/170W315H

4. Locate and disconnect the serial cables from the specific defective Communication Server. If necessary, use a flat–tip screwdriver to loosen the serial cable connectors from the Communication Server.

a. Communication Server A UD70/170A15:

(1) Disconnect 70/170W266 from Port 0.

(2) Disconnect 70/170W267 from Port 1.

(3) Disconnect 70/170W268 from Port 2.

(4) Disconnect 70/170W269 from Port 3.

(5) Disconnect 70/170W270 from Port 4.

b. Communication Server B UD70/170A16:

(1) DoD and FAA sites disconnect 70/170W274 from Port 0.

(2) NWS sites disconnect 70/170W275 from Port 0.

(3) Disconnect 70/170W276 from Port 1.

(4) Disconnect 70/170W277 from Port 2.

(5) Disconnect 70/170W278 from Port 3.

(6) Disconnect 70/170W279 from Port 4.

(7) Disconnect 70/170W280 from Port 5.

(8) Disconnect 70/170W281 from Port 6.

(9) Disconnect 70/170W282 from Port 7.

c. Communication Server C UD70/170A17:

(1) Disconnect 70/170W283 from Port 0.

(2) Disconnect 70/170W284 from Port 1.

(3) Disconnect 70/170W285 from Port 2.

(4) Disconnect 70/170W286 from Port 3.

5. With a second technician supporting the weight of the defective Communication Server, remove the screws and washers that attach the defective Communication Server to the cabinet and remove unit from cabinet.

6. Set the defective Communication Server aside.

7. If mounting brackets are not provided, remove the mounting brackets from the defective Communication Server.

8. Attach mounting brackets on to the new Communication Server in the same manner as the brackets were attached to the defective Communication Server.

9. Reverse steps 1. through 5. to complete installation of the new Communication Server.

10. Turn the power switch to On for the new Communication Server.

11. For setup procedures see paragraph 6.6.18.

6.5.29 CSU UD70A18 REPLACEMENT PROCEDURE.

One technician is required for this procedure.

6.5.29.1 Equipment and Tools Required.

1. Screwdriver set, Phillips–tip

2. ESD Component Handling Kit

6.5.29.2 Initial Conditions/Preliminary Setup. (Refer to Figure 1–3 for the CSU location.)

1. Open the RPGPCA cabinet doors and locate the CSU UD70A18.

WARNING

Lethal voltages (from commercial power, CRTs, high–voltage power supplies, and low–voltage, high current power supplies) are present in much of the RPG Group equipment. Observe appropriate safety precautions at all times to ensure personnel safety. The maintenance technician must be familiar with the safety summary at the beginning of this document prior to performing any maintenance procedure.

6.5.29.3 Replacement Procedure.

1. Disconnect the AC/DC Converter portion of power cable 70/170W81 from the J23 power strip.
2. Disconnect the 70/170W81 power connector at the rear of the CSU.
3. Disconnect cable 70/170W259 from the NET port on the CSU.
4. Disconnect cable 70/170W258 from the DTE port on the CSU.
5. At the front of the RPGPCA cabinet, remove the four CSU bracket screws/washers securing the CSU assembly to the cabinet.
6. On each side of the CSU, remove the two screws that attach the bracket to the CSU.
7. On the front of the new CSU, set the S2 configuration switch to match the settings on the old CSU S2 switch.
8. Open up and remove the circuit card from both CSUs as follows:

ESD **CAUTION** **ESD**

The CSU circuit card is an electrostatic sensitive device which requires special handling. Refer to paragraph 6.5.2.7.

   a. Put ESD wrist strap on bare wrist and connect clip lead to an ESD mat.
   b. On the front cover, flex the upper and lower lips of the cover outwards slightly (up and down respectively) and pull the cover away from the CSU.
   c. Remove the two screws on the front plate of the CSU.
   d. Slide the front plate and circuit card out from the CSU and place on the ESD mat.

9. Note the S3 switch settings on the old CSU (reference Figure 6–11). On the new CSU, set the S3 switch to match the settings from the old CSU.
10. Reinstall the circuit cards, front screws, and front covers on both CSUs.
11. Reverse steps 1. through 6. to reinstall the new CSU.

12. There are no follow–on setup procedures for this piece of equipment.

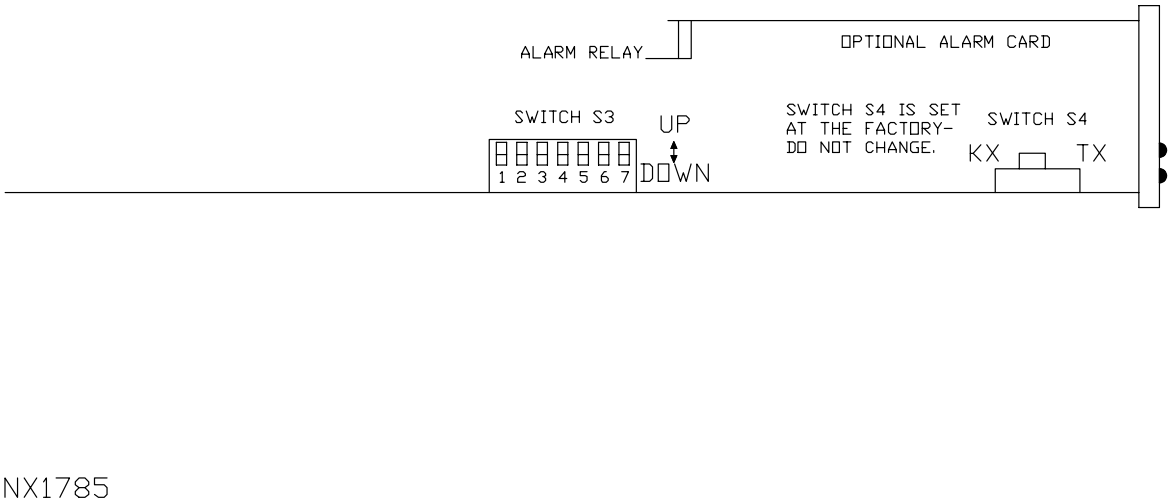

Figure 6–11. CSU UD70A18 Internal Switch S3

6.5.30 SHORT HAUL MODEM UD70A19 REPLACEMENT PROCEDURE.

One technician is required for this procedure.

6.5.30.1 Equipment and Tools Required.

1. Screwdriver set, flat–tip
2. Screwdriver set, Phillips–tip

6.5.30.2 Initial Conditions/Preliminary Setup. (Refer to Figure 1–3 for the Short Haul Modem location.)

1. Open the RPGPCA cabinet doors and locate the Short Haul Modem UD70A19.

WARNING

Lethal voltages (from commercial power, CRTs, high–voltage power supplies, and low–voltage, high current power supplies) are present in much of the RPG Group equipment. Observe appropriate safety precautions at all times to ensure personnel safety. The maintenance technician must be familiar with the safety summary at the beginning of this document prior to performing any maintenance procedure.

6.5.30.3 Replacement Procedure.

1. Disconnect cable 70/170W86 from the back of the Short Haul Modem.
2. Disconnect cable 70/170W257 from the DTE port at the Short Haul Modem.
3. Remove retaining brackets from Short Haul Modem using the proper screwdriver.
4. Remove the defective Short Haul Modem from the RPGPCA cabinet and set aside.
5. Ensure the new Short Haul Modem DCE/DTE Switch is set to DCE.
6. Reverse steps 1. through 4. to complete installation of the new Short Haul Modem.
7. There are no follow–on setup procedures for this piece of equipment.

6.5.31 RS–232/RS–422 CONVERTER (STAND–ALONE) UD70A20 REPLACEMENT PROCEDURE.

One technician is required for this procedure.

6.5.31.1 Equipment and Tools Required.

1. Screwdriver set, flat–tip
2. Screwdriver set, Phillips–tip
3. ESD Component Handling Kit

6.5.31.2 Initial Conditions/Preliminary Setup. (Refer to Figure 1–3 for the RS–232/RS–422 Converter location.)

NOTE

Read paragraph 6.5.2 for special considerations for replacement procedures.

1. Open the RPGPCA cabinet doors and locate the RS–232/RS–422 Converter UD70A20.

WARNING

Lethal voltages (from commercial power, CRTs, high−voltage power supplies, and low−voltage, high current power supplies) are present in much of the RPG Group equipment. Observe appropriate safety precautions at all times to ensure personnel safety. The maintenance technician must be familiar with the safety summary at the beginning of this document prior to performing any maintenance procedure.

6.5.31.3 Replacement Procedure.

1. Disconnect the power cord from the back of the RS−232/RS−422 Converter to remove power from Converter.

ESD **CAUTION** **ESD**

The RS−232/RS−422 Converter is an electrostatic sensitive device which require special handling. Refer to paragraph 6.5.2.7.

2. Put ESD wrist strap on and attach clip lead to chassis frame.
3. Disconnect RS−422 cable W8 from J1 and the RS−232 cable W275 from J2 at the rear of RS−232/RS−422 Converter.
4. Release the Velcro straps which secure the RS−232/RS−422 Converter to the shelf.
5. Remove the defective RS−232/RS−422 Converter and set it aside.
6. Place the new RS−232/RS−422 Converter upside−down on a flat working surface.
7. Remove the 4 screws from the base of the new RS−232/RS−422 Converter. Do not remove the bottom cover from the unit.
8. Holding the unit together, place the RS−232/RS−422 Converter right−side−up on the flat working surface and remove the top cover.
9. Check/install DIP shunts on WX1A, WX2A, WX3A, WX4B, and WX5B. See Figure 6−12.
10. Check to ensure the Receiver Termination Switch, S1, is in the Off position (away from the “1” position).
11. Replace the top cover onto the new RS−232/RS−422 Converter.
12. Holding unit together, place upside−down on a flat working surface.
13. Replace the 4 screws to secure the base onto the RS−232/RS−422 Converter.
14. Reverse steps 1. through 5. to complete installation of the new RS−232/RS−422 Converter.

15. There are no follow–on setup procedures for this piece of equipment.

6.5.32 AC POWER DISTRIBUTION PANEL UD70A22 REPLACEMENT PROCEDURE.

One technician is required for this procedure.

6.5.32.1 Equipment and Tools Required.

1. Screwdriver set, flat–tip
2. Screwdriver set, Phillips–tip

6.5.32.2 Initial Conditions/Preliminary Setup. (Refer to Figure 1–3 for the AC Power Distribution Panel location.)

NOTE

Refer to paragraph 6.5.2 for special consideration for replacement procedures.

1. Open the back of the RPGPCA cabinet doors and locate the AC Power Distribution Panel UD70A22. FAA sites skip to step 5.
2. For NWS and DoD sites to access the BDDS processor:
   a. Depressing the **<Scroll Lock>** button twice on the keyboard will cause the CDE Login screen or the `Selection Menu` to appear on the monitor.
   b. If a CDE Login screen appears, continue with this step, otherwise continue to step c. Enter **raritan<CR>** for the user (no password). The `Selection Menu` will appear on the monitor.
   c. Under normal conditions, the RPG processor is `Channel 1`, the BDDS processor is `Channel 2`, and KBD Failure is `Channel 3`.
   d. Using the ↓ and ↑ keys on the keyboard highlight the BDDS processor channel. Press **<CR>** to invoke the selection.
3. NWS and DoD sites: At the BDDS:
   a. If at a CDE Login screen, skip to step c.
   b. If within CDE, click **EXIT ▶ OK** to log out and return to the CDE Login screen.
   c. Push the power button on the front of the BDDS processor. Wait about 20 seconds for the shutdown to complete. The system should shut down to an `OK` prompt.
   d. At the back of the BDDS processor turn the power switch to Off.
4. For NWS and DoD sites to access the RPG processor:

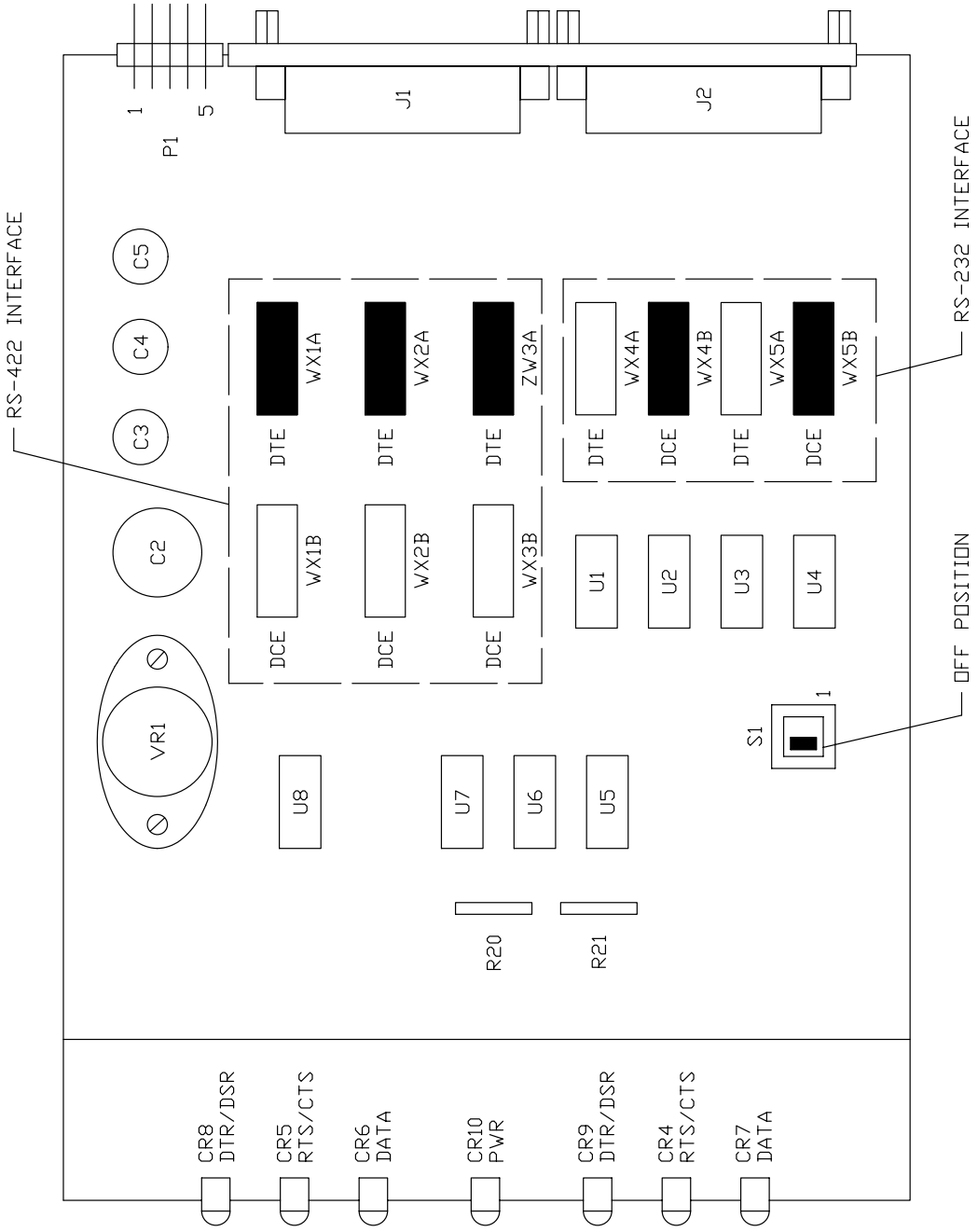

NOTE: The filled-in rectangles indicate the jumpers that contain a DIP-shunt.

NX1650

Figure 6–12. RS–232/RS–422 Converter Card Shunt Settings

a. Depressing the **<Scroll Lock>** button twice on the keyboard will cause the CDE Login screen or the `Selection Menu` to appear on the monitor.

b. If a CDE Login screen appears, continue with this step, otherwise continue to step c. Enter **raritan<CR>** for the user (no password). The `Selection Menu` will appear on the monitor.

c. Under normal conditions, the RPG processor is `Channel 1`, the BDDS processor is `Channel 2`, and KBD Failure is `Channel 3`.

d. Using the ↓ and ↑ keys on the keyboard highlight the RPG processor channel. Press **<CR>** to invoke the selection.

5. At the RPG processor:

CAUTION

Failure to perform the applicable shutdown procedures in step 5. could cause serious damage to the RPG processor.

a. Login to the CDE as a normal user, if necessary.

b. If the PowerChute display window is open, double–click on the minus sign (–) in the upper left corner of the PowerChute display window to close the PowerChute software.

c. On the CDE Control Panel, click **EXIT ▶ OK** to log out of the CDE and return to the CDE Login screen.

d. Push the power button on the front of the RPG processor. There is no immediate response for approximately 50 seconds, then another 20 seconds to complete the shutdown. The system should shut down to an `OK` prompt.

e. At the back of the RPG processor turn the power switch to Off.

6.5.32.3 Replacement Procedure.

WARNING

Failure to perform the applicable shutdown procedure could cause serious injury or death.

1. At the AC Power Distribution Panel UD70A22, place circuit breaker CB1 to Off (0).

2. Disconnect from the AC input power source:

a. For DoD, at the Secondary Power Distribution Panel UD7A3:
Turn Off circuit breakers CB25, 27, and 29 (ganged).

b. For FAA, at the Secondary Power Distribution Panel UD7A3 or UD7A29:
   Channel 1: Turn Off the circuit breakers CB25, 27, and 29 (ganged).
   Channel 2: Turn Off the circuit breakers CB25, 27, and 29 (ganged).

c. For NWS: Turn Off the appropriate circuit breakers at the Office/Building Power Panel.

3. Disconnect AC power cords from UD70A22 J1 and J2 (label for installation).

4. Locate power cord at rear of UD70A22 assembly. Follow power cord to origin, at the Power Filter UD70FL1J3. Disconnect power cord from of UD70FL1J3.

5. Remove all restraining clamps and tie wraps that gang power cord to other cords within chassis. Pull power cord out from RPGPCA cabinet so that it hangs freely from Power Distribution Panel.

6. Unscrew the AC Distribution Panel ground wire from the cabinet chassis using proper screwdriver.

7. Remove the Power Distribution Panel mounting screws using the proper screwdriver.

8. Pull defective unit out and set it aside.

9. Reverse steps 1. through 8. to complete installation of the new AC Power Distribution Panel.

10. At AC Power Distribution Panel, place circuit breaker CB1 to On (1).

11. Turn On the RPG and BDDS (NWS and DoD sites) processors using the power switch located at the back of each processor.

12. Log into the RPG as a normal user.

13. NWS and DoD sites: The BDDS processor software starts automatically.

14. This completes the replacement procedure.

6.5.33 DIAL PATCH PANEL UD70A23 REPLACEMENT PROCEDURE.

One technician is required for this procedure.

6.5.33.1 Equipment and Tools Required.

1. Screwdriver set, Phillips–tip

6.5.33.2 Initial Conditions/Preliminary Setup. (Refer to Figure 1–3 for the Dial Patch Panel location.)

1. Open the back of the RPGPCA cabinet doors and locate the Dial Patch Panel UD70A23.

6.5.33.3 Replacement Procedure.

1. Unstrap the Velcro and disconnect connectors 70/170W33 and 70/170W32 from the back of the defective Dial Patch Panel.
2. Remove the screws and washers securing the Dial Patch Panel to the cabinet mounting rails, using the proper screwdriver. Set the defective unit aside.
3. Reverse steps 1. and 2. to complete installation of the new Dial Patch Panel.
4. There are no follow–on setup procedures for this piece of equipment.

6.5.34 DIAL ADAPTER PANEL UD70A24 REPLACEMENT PROCEDURE.

One technician is required for this procedure.

6.5.34.1 Equipment and Tools Required.

1. Screwdriver set, Phillips–tip

6.5.34.2 Initial Conditions/Preliminary Setup. (Refer to Figure 1–3 for the Dial Adapter Panel location.)

1. Open the back of the RPGPCA cabinet doors and locate the Dial Adapter Panel UD70A24.

6.5.34.3 Replacement Procedure.

1. Disconnect and label (for reinstallation) all telephone plugs, 70/170W101 through 70/170W108, from the front of the defective Dial Adapter Panel.
2. Unstrap the Velcro and disconnect the 70/170W32 connector from the back of the defective Dial Adapter Panel.
3. Remove the screws and washers securing the Dial Adapter Panel to the cabinet mounting rails, using the proper screwdriver. Set the unit aside.
4. Reverse steps 1. through 3. to complete installation of the new Dial Adapter Panel.
5. There are no follow–on setup procedures for this piece of equipment.

6.5.35 DEDICATED ADAPTER PANEL UD70A25 REPLACEMENT PROCEDURE.

One technician is required for this procedure.

6.5.35.1 Equipment and Tools Required.

1. Screwdriver set, Phillips–tip

6.5.35.2 Initial Conditions/Preliminary Setup. (Refer to Figure 1–3 for the Dedicated Adapter Panel location.)

1. Open the back of the RPGPCA cabinet doors and locate the Dedicated Adapter Panel UD70A25.

6.5.35.3 Replacement Procedure.

1. Disconnect and label (for reinstallation) all telephone plugs, 70/170W109 through 70/170W125, from the front of the defective Dedicated Adapter Panel.
2. Unstrap the Velcro and disconnect the connectors 70/170W21 and 70/170W19 from the back of the Dedicated Adapter Panel.
3. Remove the screws and washers securing the defective Dedicated Adapter Panel to the cabinet mounting rails, using the proper screwdriver. Set unit aside.
4. Reverse steps 1. through 3. to complete installation of the new Dedicated Adapter Panel.
5. There are no follow–on setup procedures for this piece of equipment.

6.5.36 DEDICATED PATCH PANEL UD70A26 REPLACEMENT PROCEDURE.

One technician is required for this procedure.

6.5.36.1 Equipment and Tools Required.

1. Screwdriver set, Phillips–tip

6.5.36.2 Initial Conditions/Preliminary Setup. (Refer to Figure 1–3 for the Dedicated Patch Panel location.)

1. Open the back of the RPGPCA cabinet doors and locate the Dedicated Patch Panel UD70A26.

6.5.36.3 Replacement Procedure.

1. Unstrap the Velcro and disconnect connectors 70/170W21 and 70/170W22 from the back of the defective Dedicated Patch Panel.
2. Remove the screws and washers securing the defective Dedicated Patch Panel to the cabinet mounting rails using the proper screwdriver. Set unit aside.
3. Reverse steps 1. and 2. to complete installation of the new Dedicated Patch Panel.
4. There are no follow–on setup procedures for this piece of equipment.

6.5.37 DEDICATED PATCH PANEL UD70A27 REPLACEMENT PROCEDURE.

One technician is required for this procedure.

6.5.37.1 Equipment and Tools Required.

1. Screwdriver set, Phillips–tip

6.5.37.2 Initial Conditions/Preliminary Setup. (Refer to Figure 1–3 for the Dedicated Patch Panel location.)

1. Open the back of the RPGPCA cabinet doors and locate the Dedicated Patch Panel UD70A27.

6.5.37.3 Replacement Procedure.

1. Unstrap the Velcro and disconnect connectors 70/170W19 and 70/170W20 from the back of the defective Dedicated Patch Panel.
2. Remove the screws and washers securing the defective Dedicated Patch Panel to the cabinet mounting rails using the proper screwdriver. Set unit aside.
3. Reverse steps 1. and 2. to complete installation of the new Dedicated Patch Panel.
4. There are no follow–on setup procedures for this piece of equipment.

6.5.38 RMS POWER ADMINISTRATOR A AND B (BAYTECH) UD70/170A28, UD70/170A29 REPLACEMENT PROCEDURE.

Two technicians are required for this procedure.

6.5.38.1 Equipment and Tools Required.

1. Screwdriver set, Phillips–tip
2. Flashlight

6.5.38.2 Initial Conditions/Preliminary Setup. (Refer to Figure 1–3 for the RMS Power Administrator location.)

1. Open the RPGPCA cabinet doors and locate the Baytech RMS Power Administrator A UD70/170A28 or RMS Power Administrator B UD70/170A29.

CAUTION

Failure to perform the applicable shutdown procedures in steps 2. through 5. could cause serious damage to the RPG processor and the RMS Power Administrator.

2. At the RPG processor:
   a. Login to the CDE as a normal user, if necessary.
   b. If the PowerChute display window is open, double–click on the minus sign (–) in the upper left corner of the PowerChute display window to close the PowerChute software.
   c. On the CDE Control Panel, click **EXIT ▶ OK** to log out of the CDE and return to the CDE Login screen.
   d. Push the power button on the front of the RPG processor. There is no immediate response for approximately 50 seconds, then another 20 seconds to complete the shutdown. The system should shut down to an `OK` prompt.
   e. At the back of the RPG processor turn the power switch to Off.

3. If RMS Power Administrator A is being replaced continue with this step. If RMS Power Administrator B is being replaced, skip to step 4.

   a. At the back of Router UD70/170A2, turn the power switch Off.

   b. At the back of Communication Server A UD70/170A15, turn the power switch Off.

4. If RMS Power Administrator B is being replaced continue with this step, otherwise skip to step 5.

   a. At the back of Communication Server B and C, UD70/170A16 and UD70/170A17 turn the power switch Off.

5. At the front of the defective RMS Power Administrator, turn the power switch to Off.

WARNING

Lethal voltages (from commercial power, CRTs, high–voltage power supplies, and low–voltage, high current power supplies) are present in much of the RPG Group equipment. Observe appropriate safety precautions at all times to ensure personnel safety. The maintenance technician must be familiar with the safety summary at the beginning of this document prior to performing any maintenance procedure.

6.5.38.3 Replacement Procedure.

NOTE

The RMS Power Administrators have their outlets numbered from right to left, when being viewed from the rear. See Figure 4–33 for details.

1. If the defective unit is RMS Power Administrator A, continue with this step. Otherwise if the defective unit is RMS Power Administrator B, skip to step 2.

   a. Disconnect AC power cord 70/170W60 from the IN1 Outlet at the back of the RMS Power Administrator A.

   b. Disconnect AC power cord 70/170W61 from the OUT1 Outlet at the back of the RMS Power Administrator A.

   c. Disconnect AC power cord 70/170W63 from the OUT2 Outlet at the back of the RMS Power Administrator A.

   d. Disconnect AC power cord 70/170W62 from the IN2 Outlet at the back of the RMS Power Administrator A.

e. Disconnect AC power cord 70/170W64 from the IN3 Outlet at the back of the RMS Power Administrator A.

f. Disconnect AC power cord 70/170W65 from the OUT3 Outlet at the back of the RMS Power Administrator A.

g. Disconnect AC power cord 70/170W67 from the OUT4 Outlet at the back of the RMS Power Administrator A.

h. Disconnect AC power cord 70/170W66 from the IN4 Outlet at the back of the RMS Power Administrator A.

i. Skip to step 3.

2. If the defective unit is RMS Power Administrator B continue with this step. Otherwise skip to step 3.

   a. Disconnect AC power cord 70/170W68 from the IN1 Outlet at the back of the RMS Power Administrator B.

   b. Disconnect AC power cord 70/170W69 from the OUT1 Outlet at the back of the RMS Power Administrator B.

   c. The OUT2 Outlet at the back of the RMS Power Administrator B is not currently used.

   d. Disconnect AC power cord 70/170W70 from the IN2 Outlet at the back of the RMS Power Administrator B.

   e. Disconnect AC power cord 70/170W72 from the IN3 Outlet at the back of the RMS Power Administrator B.

   f. Disconnect AC power cord 70/170W73 from the OUT3 Outlet at the back of the RMS Power Administrator B.

   g. Disconnect AC power cord 70/170W75 from the OUT4 Outlet at the back of the RMS Power Administrator B.

   h. Disconnect AC power cord 70/170W74 from the IN4 Outlet at the back of the RMS Power Administrator B.

3. Disconnect the applicable LAN cable (70/170W210 or 70/170W211) from the Ethernet port at the front of the defective RMS Power Administrator.

4. Disconnect the applicable RS–232 cable (W263 or W264) from the EIA–232 port at the front of the RMS Power Administrator.

5. With a second technician supporting the RMS Power Administrator, remove the screws and washers securing the defective RMS Power Administrator to the cabinet mounting rails.

6. Remove the defective RMS Power Administrator from the UD70/170 cabinet and set the unit aside.

7. If mounting brackets are not provided, remove the mounting brackets from the defective unit for reuse.

8. Secure the L–shaped brackets to the RMS Power Administrator in the same manner that the defective unit had the brackets installed.

9. Reverse steps 1. through 6. to complete installation of the new RMS Power Administrator.

10. Turn On the power switch to the new RMS Power Administrator.

11. If the new unit is RMS Power Administrator A, continue with this step.

    a. Turn power On to the Router UD70A2

    b. Turn power On to Communication Server A UD70/170A15

12. If the new unit is RMS Power Administrator B continue with this step, otherwise skip to step 13.

    a. Turn power On to Communication Server B and C, UD70/170A16 and UD70/170A17.

13. Turn On the RPG processor using the power switch located at the back of each processor.

14. For setup procedures see paragraph 6.6.19.

6.5.39 POWER FILTER UD70FL1 REPLACEMENT PROCEDURE.

Two technicians are required for this procedure.

6.5.39.1 Equipment and Tools Required.

1. Screwdriver set, Phillips–tip

2. Screwdriver set, flat–tip

3. Nut driver set

4. Diagonal cutter pliers, 4–inch

6.5.39.2 Initial Conditions/Preliminary Setup. (Refer to Figure 1–3 for the Power Filter location.)

NOTE

Read paragraph 6.5.2 for special considerations for replacement procedures.

1. Open the back of the RPGPCA cabinet doors and locate the Power Filter UD70FL1. FAA sites skip to step 5.

2. For NWS and DoD sites to access the BDDS processor:

   a. Depressing the **<Scroll Lock>** button twice on the keyboard will cause the CDE Login screen or the `Selection Menu` to appear on the monitor.

   b. If a CDE Login screen appears, continue with this step, otherwise continue to step c. Enter **raritan<CR>** for the user (no password). The `Selection Menu` will appear on the monitor.

   c. Under normal conditions, the RPG processor is `Channel 1`, the BDDS processor is `Channel 2`, and KBD Failure is `Channel 3`.

   d. Using the ↓ and ↑ keys on the keyboard highlight the BDDS processor channel. Press **<CR>** to invoke the selection.

3. NWS and DoD sites: At the BDDS:

   a. If at a CDE Login screen, skip to step c.

   b. If within CDE, click **EXIT ▶ OK** to log out and return to the CDE Login screen.

   c. Push the power button on the front of the BDDS processor. Wait about 20 seconds for the shutdown to complete. The system should shut down to an `OK` prompt.

   d. At the back of the BDDS processor turn the power switch to Off.

4. For NWS and DoD sites to access the RPG processor:

   a. Depressing the **<Scroll Lock>** button twice on the keyboard will cause the CDE Login screen or the `Selection Menu` to appear on the monitor.

   b. If a CDE Login screen appears, continue with this step, otherwise continue to step c. Enter **raritan<CR>** for the user (no password). The `Selection Menu` will appear on the monitor.

   c. Under normal conditions, the RPG processor is `Channel 1`, the BDDS processor is `Channel 2`, and KBD Failure is `Channel 3`.

   d. Using the ↓ and ↑ keys on the keyboard highlight the RPG processor channel. Press **<CR>** to invoke the selection.

5. At the RPG processor:

WARNING

Failure to perform the applicable shutdown procedure in steps 5. through 6. could cause serious injury or death and damage to the RPG processor.

a. Login to the CDE as a normal user, if necessary.

b. If the PowerChute display window is open, double–click on the minus sign (–) in the upper left corner of the PowerChute display window to close the PowerChute software.

c. On the CDE Control Panel, click **EXIT ▶ OK** to log out of the CDE and return to the CDE Login screen.

d. Push the power button on the front of the RPG processor. There is no immediate response for approximately 50 seconds, then another 20 seconds to complete the shutdown. The system should shut down to an `OK` prompt.

e. At the back of the RPG processor turn the power switch to Off.

6. At the AC Power Distribution Panel UD70/170A22, set circuit breaker CB1 to Off (0).

6.5.39.3 Replacement Procedure.

WARNING

Failure to perform the applicable shutdown procedure could cause serious injury or death.

1. Disconnect from the AC input power source:

   a. For DoD, at the Secondary Power Distribution Panel UD7A3:
      Turn Off the circuit breakers CB25, 27, and 29 (ganged).

   b. For FAA, at the Secondary Power Distribution Panels UD7A3 or UD7A29:
      Channel 1: Turn Off the circuit breakers CB25, 27, and 29 (ganged).
      Channel 2: Turn Off the circuit breakers CB25, 27, and 29 (ganged).

   c. For NWS: Turn Off the appropriate circuit breakers at the Office/Building Power Panel.

2. Remove P1 of cable W9/W200 from J1 of Power Filter power cord junction box at the bottom of FL1 by unscrewing by hand.

3. Disconnect hardware, then remove nuts, lockwashers, and flatwashers from the bottom perimeter of Power Filter using the proper nut driver.

4. At the top of Power Filter, disconnect cables from J2 and J3 by hand.

5. With the second technician assisting, lift the Power Filter up and out of cabinet. Set upon its side to prevent damage to the screws.

6. Set defective Power Filter aside.

7. Reverse steps 1. through 5. to complete installation of new Power Filter.

8. At the AC Power Distribution Panel, set circuit breaker CB1 to On (1).
9. Turn On the RPG and BDDS (NWS and DoD sites) processors using the power switch located at the back of each processor.
10. Log into the RPG as a normal user.
11. NWS and DoD sites: The BDDS processor software starts automatically.
12. This completes the replacement procedure.

6.5.40 RELAY BOX POWER SUPPLY UD70PS1 REPLACEMENT PROCEDURE.

One technician is required for this procedure.

6.5.40.1 Equipment and Tools Required.

1. Screwdriver set, flat–tip
2. Screwdriver set, Phillips–tip

6.5.40.2 Initial Conditions/Preliminary Setup. (Refer to Figure 1–3 for the Relay Box Power Supply location.)

1. Open the RPGPCA cabinet doors and locate the Relay Box Power Supply UD70PS1.

WARNING

Lethal voltages (from commercial power, CRTs, high–voltage power supplies, and low–voltage, high current power supplies) are present in much of the RPG Group equipment. Observe appropriate safety precautions at all times to ensure personnel safety. The maintenance technician must be familiar with the safety summary at the beginning of this document prior to performing any maintenance procedure.

6.5.40.3 Replacement Procedure.

1. Locate AC power cable 70/170W150 at left rear of UD70/170 cabinet.
2. Disconnect cable 70/170W150 P1 from power strip J23.
3. Remove the two screws securing the terminal board cover to the top of the terminal board and remove the cover.
4. Disconnect cable 70/170W149 from terminal board (TB2–1 and TB2–4) (located to the left of power supply as viewed from the front of the cabinet.)
5. Remove two Phillips–tip screws that secure 120V CAUTION shield. Remove shield.

6. Remove cable 70/170W150 from Relay Box Power Supply (L1, N2, and GND).

7. Remove four Phillips–tip mounting screws (located underneath chassis) that secure power supply to chassis brackets. Remove Relay Box Power Supply.

8. Remove cable 70/170W149 from Relay Box Power Supply and reconnect to replacement Relay Box Power Supply.

9. Install replacement Relay Box Power Supply to chassis brackets and secure with four Phillips–tip mounting screws previously removed.

10. Reverse steps 1. through 6. to complete installation of the new Relay Box Power Supply.

11. There are no follow–on setup procedures for this piece of equipment.

6.5.41 MSCF PROCESSOR ASSEMBLY (SUN ULTRA 5) UD71A1 REPLACEMENT PROCEDURE.

Two technicians are required for this procedure.

6.5.41.1 Equipment and Tools Required.

1. Screwdriver set, Phillips–tip

6.5.41.2 Initial Conditions/Preliminary Setup. (Refer to Figure 1–5 for part location.)

NOTE

Refer to paragraph 6.5.2 for special consideration for replacement procedures.

1. Locate MSCF processor Assembly UD71A1 at the MSCF Workstation UD71.

CAUTION

Failure to perform the applicable shutdown procedures in step 2. could cause serious damage to the MSCF processor.

2. At the MSCF Workstation:

   a. If at a CDE Login screen, skip to step c.

   b. If within CDE and the MSCF processor is responding, click **EXIT ▶ OK** to log out and return to the CDE Login screen. If the MSCF processor is not responding skip to paragraph 6.5.41.3

   c. Push the power button on the front of the MSCF processor. Wait about 20 seconds for the shutdown to complete. The system should shut down to an `ok` prompt.

6.5.41.3 Replacement Procedure.

1. At the back of the MSCF processor turn the power switch to Off.
2. Turn the power Off to the Monitor.
3. Turn the power Off to the Backup Storage Device.
4. DoD and FAA: Turn the power Off to the dedicated Stand–alone Modem.
5. DoD and FAA: Turn the power Off to the Color Printer.
6. Locate and disconnect the AC power cord (71W187) from the back of the MSCF processor.
7. Disconnect the dial line from the internal modem card in PCI slot 1 at the back of the MSCF processor.
   a. NWS and DoD: 71W902
   b. FAA: 71W902A
8. Disconnect the Backup Storage Device cable (71W211) from the PCI slot 3, SCSI A port at the back of the MSCF processor.
9. Disconnect the Keyboard from J1.
10. NWS sites: Disconnect the Ethernet cable (W331) from J2 <. . .>
    a. NWS sites with DoD or FAA Distant MSCFs: Disconnect Ethernet cable (W81, W82, W83, or W84) from J2 <. . .>.
11. DoD and FAA: Disconnect the printer cable (W333) from J2 <. . .>
12. DoD and FAA sites: Disconnect leased line (71W221) from J3
13. Disconnect the Monitor pigtail 71W214 from J4.

NOTE

These procedures discuss removing and replacing MSCF equipment from the MSCF table UD71MP1. If the MSCF table is not utilized, these procedures will vary.

14. While another technician supports the MSCF processor, remove screws and washers from the mounting brackets using the proper screwdriver.
15. Remove the MSCF processor and set it aside.
16. Reverse steps 1. through 15. to complete installation of the new MSCF processor.
17. For setup procedures see paragraph 6.6.20.

6.5.42 FLOPPY DRIVE (SUN ULTRA 5) UD70A1A1A2 AND UD71A1A1A2 REPLACEMENT PROCEDURE.

Two technicians are required for the BDDS processor and one technician for the MSCF processor.

6.5.42.1 Equipment and Tools Required.

1. Screwdriver set, Phillips–tip
2. ESD Component Handling Kit

6.5.42.2 Initial Conditions/Preliminary Setup.

1. Locate the Ultra 5 processor Assembly: BDDS processor UD70A1 or MSCF processor UD71A1.
2. Place ESD conductive mat upon work surface and connect clip lead to chassis frame or proper ground.

CAUTION

Failure to perform the applicable shutdown procedures in steps 3. through 5. could cause serious damage to the Ultra 5 processor.

3. At the Ultra 5 processor, if at a CDE Login screen, skip to step 5.
4. If within CDE, click **EXIT ▶ OK** to log out and return to the CDE Login screen.
5. Push the power button on the front of the Ultra 5 processor. Wait about 20 seconds for the shutdown to complete. The system should shut down to an `OK` prompt.

6.5.42.3 Replacement Procedure.

1. At the back of the Ultra 5 processor turn the power switch to Off.
2. For the MSCF processor Ultra 5 UD71A1, turn the power Off to all attached external devices:
   a. Turn the power Off to the Monitor.
   b. Turn the power Off to the Backup Storage Device.
   c. DoD and FAA: Turn the power Off to the dedicated Stand–alone Modem.
   d. DoD and FAA: Turn the power Off to the Color Printer, located at bottom, right side.
3. Locate and disconnect the Ultra 5 processor AC power cord from the back of the processor.
4. Disconnect the Keyboard and Video cables from the back of the Ultra 5.

a. BDDS processor UD70A1: Disconnect cable 70/170W304 from the keyboard port and disconnect cable 70/170W304A from the video port at the back of the BDDS processor.

b. MSCF processor UD71A1: Disconnect the Keyboard and Monitor cables from the back of the MSCF processor.

5. Disconnect the cable from the Ultra 5 Network port J2 <. . .>.

   a. BDDS processor UD70A1: 70/170W204

   b. MSCF processor UD71A1:

      1. NWS: W331

      2. NWS with DoD or FAA Distant MSCF: W81, W82, W83, or W84

      3. DoD and FAA: W333

6. If the Ultra 5 is the MSCF processor, continue with this step, otherwise skip to step 7. Disconnect and label (for reinstallation) all remaining cables from the back of MSCF processor.

   a. 71W902 or 71W902A from PCI Card 1

   b. 71W211 from PCI Card 3

   c. DoD and FAA: 71W221 from Serial port A

7. If the Ultra 5 is the BDDS processor, continue with this step. Otherwise skip to step 8.

   a. Extend the sliding shelf the BDDS processor rests on, forward, out of the RPGPCA until the BDDS processor is clear of the RPGPCA. The rails on the shelf are designed to not extend any further than safely permitted.

WARNING

Until the BDDS processor shelf is slid back into the RPGPCA, it represents a possible injury hazard to personnel. Use caution when standing or working near the extended shelf to prevent from striking the shelf.

NOTE

There is a green 2–stage lock button on each side of the shelf rails, which acts as a locking mechanism when the shelf is in the outward position. To slide the shelf back into the RPGPCA these green buttons must be depressed until the shelf is slid past the locking mechanism.

WARNING

Pinched or cut fingers could result if care is not taken while depressing the green lock buttons and sliding the shelf inward.

b. Have a second technician, on the ground, standing by to receive the BDDS processor. Standing on the ladder, release the Velcro straps which secure the BDDS processor to the shelf.

c. Remove the BDDS processor off the shelf and hand it to the second technician.

8. If the Ultra 5 is the MSCF processor, continue with this step, otherwise continue to step 9.

NOTE

These procedures discuss removing and replacing MSCF equipment from the MSCF table UD71MP1. If the MSCF table is not utilized, these procedures will vary.

a. While another technician supports the MSCF processor, remove screws and washers from the mounting brackets using the proper screwdriver.

9. Remove the Ultra 5 processor and place onto the ESD conductive mat.

10. Remove the Ultra 5 processor cover.

a. Using a Phillips–tip screwdriver, remove the two screws securing the Ultra 5 processor cover to the chassis.

b. Slide the Ultra 5 processor cover toward the rear of the system until the cover tabs release.

c. Lift the Ultra 5 processor cover straight up and set aside.

ESD **CAUTION** **ESD**

The Floppy Drive is an electrostatic sensitive device which requires special handling. Refer to paragraph 6.5.2.7.

11. Put ESD wrist strap on bare wrist and connect clip lead to chassis frame or proper ground.

12. Locate the Floppy Drive in the Ultra 5 processor UD70A1A1A2 or UD71A1A1A2. (Refer to Figure 6–13 for the Floppy Drive location.)

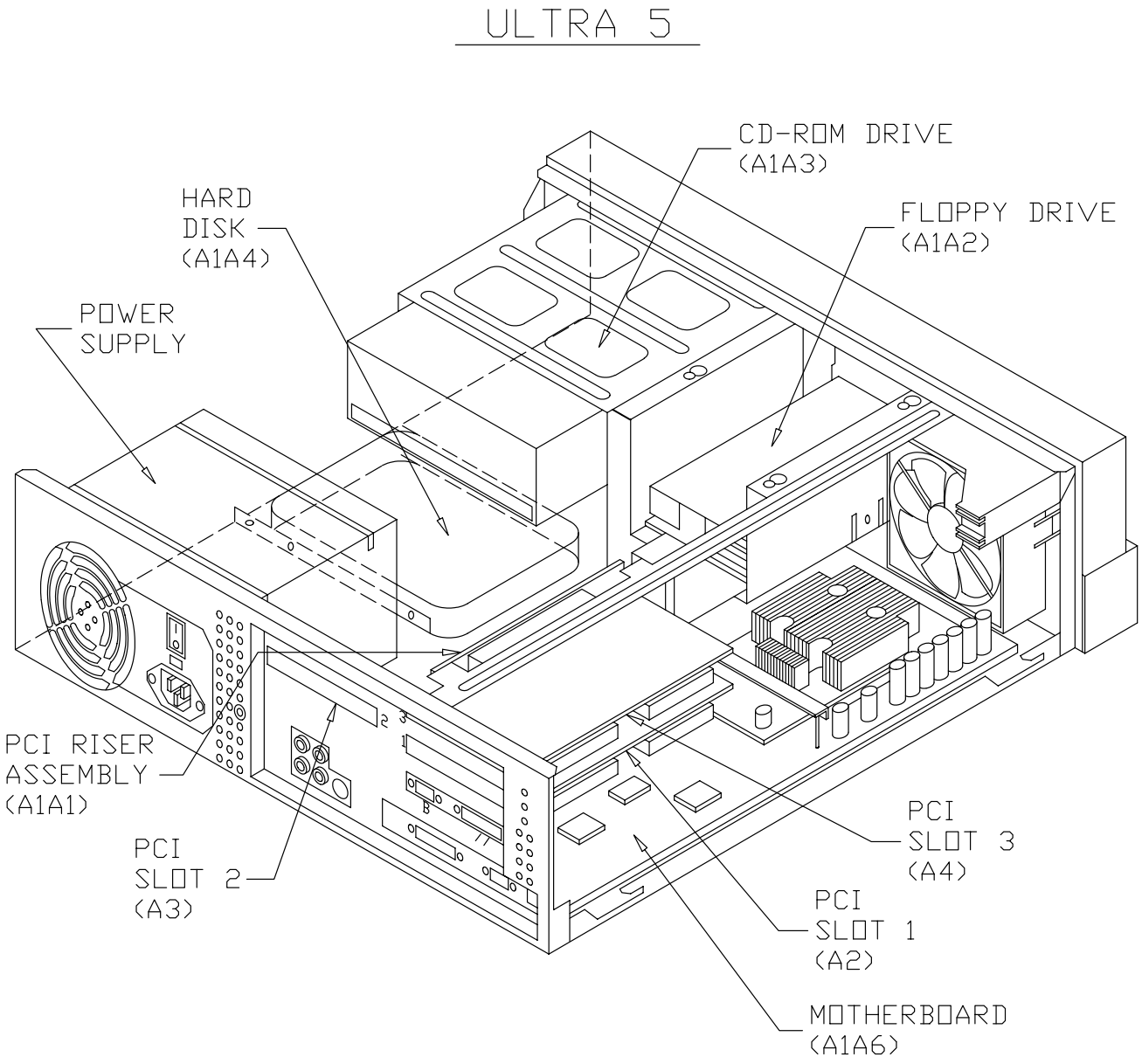

NX1651

Figure 6–13. BDDS and MSCF Processor Assembly Ultra 5
(UD70A1 and UD71A1) Interior Overview

13. Remove the Floppy Drive.

    a. Disconnect and note for replacement the Floppy Drive bus cable assembly from the Floppy Drive.

    b. Disconnect and note for replacement the power cable from the Floppy Drive.

NOTE

In the next step, loosen, DO NOT remove the three screws securing the Floppy Drive bracket to the chassis.

    c. Using a Phillips–tip screwdriver, loosen but do not remove, the three screws (on the top of the assembly) securing the Floppy Drive bracket to the chassis.

    d. Remove the Floppy Drive bracket from the chassis by sliding back and lifting free of the three screws.

    e. Using a Phillips–tip screwdriver, remove the four screws securing the Floppy Drive to the Floppy Drive bracket.

    f. Remove the Floppy Drive from the Floppy Drive bracket and set the Floppy Drive aside onto an ESD mat.

14. Replace the Floppy Drive.

CAUTION

When reattaching the cable connectors, verify that the cable connectors are oriented properly before applying pressure. The red stripe on the bus cable must be aligned with Pin 1.

    a. Position the new Floppy Drive into the Floppy Drive bracket.

    b. Using a Phillips–tip screwdriver, replace the four screws securing the Floppy Drive to the Floppy Drive bracket.

    c. Position the Floppy Drive bracket into the chassis, aligning the three holes on the bracket with the three screws on the chassis.

    d. Slide the bracket forward until it stops.

    e. Using a Phillips–tip screwdriver, tighten the three screws securing the Floppy Drive bracket to the chassis.

    f. Connect the Floppy Drive bus cable assembly to the Floppy Drive.

    g. Connect the power cable to the Floppy Drive.

15. Remove the ESD wrist strap.

16. Reverse steps 2. through 10. to complete installation of the new Floppy Drive.

17. Turn the power switch On at the back of the Ultra 5 processor.

18. Start the applicable processor software.

    a. For the MSCF processor: Table 4–46 and Table 4–47.

    b. For the BDDS processor: The software starts automatically.

19. Verify Floppy Drive Functionality IAW Figure 6–2 Note 4.

20. There are no follow–on setup procedures for this piece of equipment.

6.5.43 CD–ROM DRIVE (SUN ULTRA 5) UD70A1A1A3 AND UD71A1A1A3 REPLACEMENT PROCEDURE.

Two technicians are required for the BDDS processor and one technician for the MSCF processor.

6.5.43.1 Equipment and Tools Required.

1. Screwdriver set, Phillips–tip

2. ESD Component Handling Kit

6.5.43.2 Initial Conditions/Preliminary Setup.

1. Locate the Ultra 5 processor Assembly: BDDS processor UD70A1 or MSCF processor UD71A1.

2. Place ESD conductive mat upon work surface and connect clip lead to to chassis frame or proper ground.

CAUTION

Failure to perform the applicable shutdown procedures in steps 3. through 1. could cause serious damage to the Ultra 5 processor.

3. At the Ultra 5 processor, if at a CDE Login screen, skip to step 5.

4. If within CDE, click **EXIT ▶ OK** to log out of the CDE and return to the CDE Login screen.

5. Push the power button on the front of the Ultra 5 processor. Wait about 20 seconds for the shutdown to complete. The system should shut down to an `OK` prompt.

6.5.43.3 Replacement Procedure.

1. At the back of the Ultra 5 processor turn the power switch to Off.

2. For the MSCF processor Ultra 5 UD71A1, turn the power Off to any attached external devices:

a. Turn the power Off to the Monitor.

b. Turn the power Off to the Backup Storage Device.

c. DoD and FAA: Turn the power Off to the dedicated Stand–alone Modem.

d. DoD and FAA: Turn the power Off to the Color Printer.

3. Locate and disconnect the AC power cord from the back of the Ultra 5 processor.

4. Disconnect the Keyboard and Video cables from the back of the Ultra 5.

   a. BDDS processor UD70A1: Disconnect cable 70/170W304 from the keyboard port and disconnect cable 70/170W304A from the video port at the back of the BDDS processor.

   b. MSCF processor UD71A1: Disconnect the Keyboard and Monitor cables from the rear of the Ultra 5.

5. Disconnect the cable from the Ultra 5 Network port J2 <. . .>.

   a. BDDS processor UD70A1: 70/170W204

   b. MSCF processor UD71A1:

      (1) NWS: W331

      (2) NWS with DoD or FAA Distant MSCF: W81, W82, W83, or W84

      (3) DoD and FAA: W333

6. If the Ultra 5 is the MSCF processor, continue with this step, otherwise skip to step 7. Disconnect and label (for reinstallation) all remaining cables from the back of MSCF processor.

   a. 71W902 or 71W902A from PCI Card 1

   b. 71W211 from PCI Card 3

   c. DoD and FAA: 71W221 from Serial port A

7. If the Ultra 5 is the BDDS processor, continue with this step. Otherwise skip to step 8.

   a. Extend the sliding shelf the BDDS processor rests on, forward, out of the RPGPCA until the BDDS processor is clear of the RPGPCA. The rails on the shelf are designed to not extend any further than safely permitted.

WARNING

Until the BDDS processor shelf is slid back into the RPGPCA, it represents a possible injury hazard to personnel. Use caution when standing or working near the extended shelf to prevent from striking the shelf.

NOTE

There is a green 2–stage lock button on each side of the shelf rails, which acts as a locking mechanism when the shelf is in the outward position. To slide the shelf back into the RPGPCA these green buttons must be depressed until the shelf is slid past the locking mechanism.

WARNING

Pinched or cut fingers could result if care is not taken while depressing the green lock buttons and sliding the shelf inward.

b. Have the second technician, on the ground, standing by to receive the BDDS processor. Standing on the ladder, release the Velcro straps which secure the BDDS processor to the shelf.

c. Remove the BDDS processor off the shelf and hand it to the second technician.

8. If the Ultra 5 is the MSCF processor, continue with this step, otherwise skip to step 9.

NOTE

These procedures discuss removing and replacing MSCF equipment from the MSCF table UD71MP1. If the MSCF table is not utilized, these procedures will vary.

a. While another technician supports the MSCF processor, remove screws and washers from the mounting rails using the proper screwdriver.

9. Remove and place the Ultra 5 processor onto the ESD conductive mat.

10. Remove the Ultra 5 processor cover.

a. Using a Phillips–tip screwdriver, remove the two screws securing the Ultra 5 processor cover to the chassis.

b. Slide the Ultra 5 processor cover toward the rear of the system until the cover tabs release.

c. Lift the Ultra 5 processor cover straight up and set aside.

ESD **CAUTION** **ESD**

The CD–ROM Drive is an electrostatic sensitive device which requires special handling. Refer to paragraph 6.5.2.7.

11. Put ESD wrist strap on bare wrist and connect clip lead to to chassis frame or proper ground.

12. Locate the CD–ROM Drive in the Ultra 5 processor UD70A1A1A3 or UD71A1A1A3. (Refer to Figure 6–13 for the CD–ROM Drive location.)

13. Remove the CD–ROM Drive.

    a. This step is to move the Floppy Drive bracket out of the way so the CD–ROM Drive can be accessed.

NOTE

In the next step, loosen, DO NOT remove the three screws securing the Floppy Drive bracket to the chassis.

(1) With a Phillips–tip screwdriver, loosen (but do not remove) the three screws securing the Floppy Drive bracket to the chassis.

(2) Slide the Floppy Drive bracket back and lift it from the three screws. Do not remove any of the cables attached to the Floppy Drive.

(3) Set the Floppy Drive bracket on top of the power supply.

    b. Disconnect and note for replacement, the bus cable connector from the back of the CD–ROM Drive.

    c. Disconnect and note for replacement, the power cable connector from the back of the CD–ROM Drive.

    d. Disconnect and note for replacement, the audio cable connector from the back of the CD–ROM Drive.

    e. With a Phillips–tip screwdriver, remove the four screws, located on the sides, securing the CD–ROM Drive to the CD–ROM Drive bracket.

    f. Push the CD–ROM Drive toward the chassis front and remove.

    g. Place the CD–ROM Drive aside onto an ESD mat.

14. Replace the CD–ROM Drive.

CAUTION

When reattaching the cable connectors, verify that the cable connectors are oriented properly before applying pressure. The red stripe on the bus cable must be aligned with Pin 1.

    a. Ensure the new CD–ROM Drive back panel mode–select jumper is set to MA.

    b. Position the new CD–ROM Drive into the CD–ROM Drive bracket.

c. Push the CD–ROM Drive toward the chassis rear.

d. With a Phillips–tip screwdriver, replace the four screws securing the CD–ROM Drive to the bracket.

e. Replace the Floppy Drive assembly.

(1) Place the Floppy Drive bracket back in position.

(2) Align the three holes in the bracket with the three securing screws at the chassis.

(3) Slide the Floppy Drive bracket forward until it stops.

(4) With a Phillips–tip screwdriver, tighten the three securing screws.

f. Connect the CD–ROM Drive bus cable connector to the back of the CD–ROM Drive.

g. Connect the Power cable connector to the back of the CD–ROM Drive.

h. Connect the Audio cable connector to the back of the CD–ROM Drive.

15. Remove the ESD wrist strap.

16. Reverse steps 2. through 10. to complete installation of the new CD–ROM.

17. Turn the power switch On to the Ultra 5 processor.

18. Start the applicable processor software.

a. For the MSCF processor: Table 4–46 and Table 4–47.

b. For the BDDS processor: The software starts automatically.

19. Verify proper CD–ROM functionality IAW Figure 6–2 Note 5.

20. There are no follow–on setup procedures for this piece of equipment.

6.5.44 HARD DISK (SUN ULTRA 5) UD70A1A1A4 AND UD71A1A1A4 REPLACEMENT PROCEDURE.

Two technicians are required for the BDDS processor and one technician for the MSCF processor.

6.5.44.1 Equipment and Tools Required.

1. Screwdriver set, Phillips–tip

2. ESD Component Handling Kit

6.5.44.2 Initial Conditions/Preliminary Setup.

1. Locate the Ultra 5 processor Assembly: BDDS processor UD70A1 or MSCF processor UD71A1.
2. Place ESD conductive mat upon work surface and connect clip lead to to chassis frame or proper ground.

CAUTION

Failure to perform the applicable shutdown procedures in steps 3. through 1. could cause serious damage to the Ultra 5 processor.

3. At the Ultra 5 processor, if at a CDE Login screen, skip to step 5.
4. If within CDE and the Ultra 5 processor is responding, click **EXIT ▶ OK** to log out and return to the CDE Login screen.
5. Push the power button on the front of the Ultra 5 processor. Wait about 20 seconds for the shutdown to complete. The system should shut down to an `OK` prompt.

6.5.44.3 Replacement Procedure.

1. At the back of the Ultra 5 processor turn the power switch to Off.
2. For the MSCF processor Ultra 5 UD71A1, turn the power Off to attached external devices.
   a. Turn the power Off to the Monitor.
   b. Turn the power Off to the Backup Storage Device.
   c. DoD and FAA: Turn the power Off to the dedicated Stand–alone Modem.
   d. DoD and FAA: Turn the power Off to the Color Printer.
3. Locate and disconnect the AC power cord from the back of the Ultra 5 processor.
4. Disconnect the Keyboard and Video cables from the back of the Ultra 5.
   a. BDDS processor UD70A1: Disconnect cable 70/170W304 from the keyboard port and disconnect cable 70/170W304A from the video port at the back of the BDDS processor.
   b. MSCF processor UD71A1: Disconnect the Keyboard and Monitor cables from the rear of the Ultra 5.
5. Disconnect the cable from the Ultra 5 Network port J2 <. . .>.
   a. BDDS processor UD70A1: 70/170W204
   b. MSCF processor UD71A1:

1. NWS: W331
2. NWS with DoD or FAA Distant MSCF: W81, W82, W83, or W84
3. DoD and FAA: W333

6. If the Ultra 5 is the MSCF processor, continue with this step, otherwise skip to step 7. Disconnect and label (for reinstallation) all remaining cables from the back of MSCF processor.
   a. 71W902 or 71W902A from PCI Card 1
   b. 71W211 from PCI Card 3
   c. DoD and FAA: 71W221 from Serial port A
7. If the Ultra 5 is the BDDS processor, continue with this step. Otherwise for the MSCF processor, skip to step 8.
   a. Extend the sliding shelf the BDDS processor rests on, forward, out of the RPGPCA until the BDDS processor is clear of the RPGPCA. The rails on the shelf are designed to not extend any further than safely permitted.

WARNING

Until the BDDS processor shelf is slid back into the RPGPCA, it represents a possible injury hazard to personnel. Use caution when standing or working near the extended shelf to prevent from striking the shelf.

NOTE

There is a green 2–stage lock button on each side of the shelf rails, which acts as a locking mechanism when the shelf is in the outward position. To slide the shelf back into the RPGPCA these green buttons must be depressed until the shelf is slid past the locking mechanism.

WARNING

Pinched or cut fingers could result if care is not taken while depressing the green lock buttons and sliding the shelf inward.

   b. Have the second technician, on the ground, standing by to receive the BDDS processor. Standing on the ladder, release the Velcro straps which secure the BDDS processor to the shelf.
   c. Remove the BDDS processor off the shelf and hand it to the second technician.
8. If the Ultra 5 is the MSCF processor, continue with this step, otherwise skip to step 9.

NOTE

These procedures discuss removing and replacing MSCF equipment from the MSCF table UD71MP1. If the MSCF table is not utilized, these procedures will vary.

a. While another technician supports the MSCF processor, remove screws and washers from the mounting rails using the proper screwdriver.

9. Remove and place the Ultra 5 processor onto the ESD conductive mat.

10. Remove the Ultra 5 processor cover.

    a. Using a Phillips–tip screwdriver, remove the two screws securing the Ultra 5 processor cover to the chassis.

    b. Slide the Ultra 5 processor cover toward the rear of the system until the cover tabs release.

    c. Lift the Ultra 5 processor cover straight up and set aside.

ESD **CAUTION** **ESD**

The Hard Disk is an electrostatic sensitive device which requires special handling. Refer to paragraph 6.5.2.7.

11. Put ESD wrist strap on bare wrist and connect clip lead to to chassis frame or proper ground.

12. Locate the Hard Disk in the Ultra 5 Assembly. (Refer to Figure 6–13 for the Hard Disk location.)

13. Remove the Hard Disk.

    a. This step is to move CD–ROM Drive connectors out of the way to access the Hard Disk.

        (1) Disconnect and note for replacement, the power cable connector from the back of the CD–ROM Drive.

        (2) Disconnect and note for replacement, the bus cable connector from the back of the CD–ROM Drive.

        (3) Move the CD–ROM power and bus cables out of the way.

    b. With a Phillips–tip screwdriver, remove the two screws securing the Hard Disk bracket to the chassis. Tilt the unit and lift out.

    c. Disconnect and note for replacement, the Hard Disk bus cable connector from the Hard Disk.

    d. Disconnect and note for replacement, the power cable connector from the Hard Disk.

e. Set the Hard Disk and Hard Disk bracket from the chassis and set it onto the ESD mat.

f. With a Phillips–tip screwdriver, remove the four screws securing the Hard Disk to the Hard Disk bracket.

g. Remove the Hard Disk from the Hard Disk bracket.

h. Place the defective Hard Disk aside.

14. Replace the Hard Disk.

CAUTION

When reattaching the cable connectors, verify that the cable connectors are oriented properly before applying pressure. The red stripe on the bus cable must be aligned with Pin 1.

a. Ensure the new Hard Disk back panel mode–select jumper is set to CS (Cable Select).

b. Position the new Hard Disk into the Hard Disk bracket.

c. With a Phillips–tip screwdriver, replace the four screws securing the Hard Disk to the Hard Disk bracket.

d. Connect the Hard Disk bus cable connector to the Hard Disk.

e. Connect the Hard Disk power cable connector to the Hard Disk.

f. Position the Hard Disk and Hard Disk bracket into the chassis, ensuring that the bracket engages the two alignment tabs at the chassis bottom.

g. With a Phillips–tip screwdriver, replace the two screws securing the Hard Disk bracket to the chassis.

h. Connect the CD–ROM power cable connector to the back of the CD–ROM Drive.

i. Connect the CD–ROM bus cable connector to the back of the CD–ROM Drive.

15. Remove the ESD wrist strap.

16. Reverse steps 2. through 10. to complete installation of the new Hard Disk.

17. Complete the applicable setup procedure.

a. For the MSCF processor: complete the setup procedure in paragraph 6.6.20.

b. For the BDDS processor: complete the setup procedure in paragraph 6.6.4.

18. This completes the replacement procedure.

6.5.45 MSCF 21–INCH MONITOR (SUN) UD71A2 REPLACEMENT PROCEDURE.

Two technicians are required for this procedure.

The MSCF Monitor is hot–swappable.

6.5.45.1 Equipment and Tools Required.

1. None.

6.5.45.2 Initial Conditions/Preliminary Setup. (Refer to Figure 1–5 for part location.)

1. Locate Monitor UD71A2 at the MSCF Workstation UD71.
2. At the front of the Monitor, turn power switch Off.

6.5.45.3 Replacement Procedure.

1. Remove the back shield from the monitor protecting the power cord connection. The finger release is located on the bottom center of the shield.
2. Locate and disconnect the MSCF Monitor AC power cord (71W188) from back of the MSCF Monitor.
3. Locate and disconnect the MSCF Monitor cable from its interconnect cable (71W214) to the processor.

WARNING

The weight of the MSCF Monitor is approximately 68 pounds. Two technicians are required to lift the monitor during removal and replacement.

4. With help from the second technician, remove the MSCF Monitor. Set the MSCF Monitor aside.
5. Reverse steps 1. through 4. to complete installation of the new MSCF Monitor.
6. At the front of the Monitor, turn the power switch On.
7. There are no follow–on setup procedures for this piece of equipment.

6.5.46 MSCF KEYBOARD (SUN) UD71A3 REPLACEMENT PROCEDURE.

One technician is required for this procedure.

The MSCF Keyboard is hot–swappable.

6.5.46.1 Equipment and Tools Required.

1. None.

6.5.46.2 Initial Conditions/Preliminary Setup. (Refer to Figure 1–5 for part location.)

1. Locate the MSCF Keyboard UD71A3 at the MSCF Workstation UD71.

6.5.46.3 Replacement Procedure.

1. Locate and disconnect the Keyboard cable from the Keyboard Port at the back of the MSCF processor (UD71A1J1).
2. Place Keyboard face down upon a level surface.
3. Locate and disconnect the Mouse cable from the Keyboard.
4. Set the defective Keyboard aside.
5. Connect the Mouse cable to the Mouse port at the underside of the new Keyboard.
6. Replace Keyboard and Mouse back to their original position.
7. Connect Keyboard cable to the Keyboard port at the back of MSCF processor.
8. There are no follow–on setup procedures for this piece of equipment.

6.5.47 MSCF MOUSE (SUN) UD71A4 REPLACEMENT PROCEDURE.

One technician is required for this procedure.

The MSCF Mouse is hot–swappable.

6.5.47.1 Equipment and Tools Required.

1. None

6.5.47.2 Initial Conditions/Preliminary Setup. (Refer to Figure 1–5 for part location.)

1. Locate the Sun MSCF Mouse UD71A4 at the MSCF Workstation UD71.

6.5.47.3 Replacement Procedure.

1. Locate and disconnect the Keyboard cable to the Keyboard Port at the back of the MSCF processor (UD71A1).
2. Place Keyboard face down upon a level surface.
3. Locate and disconnect the Mouse cable from the Keyboard.
4. Remove the defective Mouse and set it aside.
5. Connect the new MSCF Mouse cable to the Mouse port at the underside of the Keyboard.
6. Replace Keyboard and Mouse back to its original position.

7. Connect Keyboard cable to the Keyboard port at the back of MSCF processor.

8. There are no follow–on setup procedures for this piece of equipment.

6.5.48 MSCF STAND ALONE MODEM (CODEX 3261 FAST) UD71A5 REPLACEMENT PROCEDURE.

One technician is required for this procedure.

6.5.48.1 Equipment and Tools Required.

1. Screwdriver set, Jewelers

2. Screwdriver set, Phillips–tip

6.5.48.2 Initial Conditions/Preliminary Setup. (Refer to Figure 1–5 for part location.)

1. Locate Codex Modem UD71A5 at the MSCF Workstation UD71.

2. Place power switch at the back of the modem to the Off position.

6.5.48.3 Replacement Procedure.

1. Disconnect the AC power cord (71W189) from the back of the modem.

2. Disconnect the leased line (W220 or W227) from the back of the modem unit.

3. Disconnect the DTE cable (71W221) from the back of the modem using the proper screwdriver.

NOTE

These procedures discuss removing and replacing MSCF equipment from the MSCF table UD71MP1. If the MSCF table is not utilized, these procedures will vary.

4. Loosen brackets supporting the modem. Remove defective modem and set aside.

5. Ensure that DIP switches 1 and 2 at the back of the new modem are in the On (down) position. DIP switches 3 through 6 are in the Off (up) position.

6. Place new modem in brackets and tighten brackets.

7. Reverse steps 1. through 3. to complete installation of the new modem.

8. Turn the power switch On to the modem.

9. Complete the set up procedure for the MSCF modem in paragraph 6.6.21.

10. This completes the replacement procedure.

6.5.49 MSCF BACKUP STORAGE DEVICE (IOMEGA JAZ) UD71A6 REPLACEMENT PROCEDURE.

One technician is required for this procedure.

6.5.49.1 Equipment and Tools Required.

1. Scribe

6.5.49.2 Initial Conditions/Preliminary Setup. (Refer to Figure 1–5 for part location.)

1. Locate Backup Storage Device UD71A6 at the MSCF Workstation UD71.
2. Remove any disk in the drive by pressing the eject button on the Backup Storage Device.
3. At the back of the Backup Storage Device, turn the power switch to Off.
4. Shutdown the MSCF Processor UD71 as follows:
   a. If at a CDE Login screen, skip to step c.
   b. If within CDE Control Panel, click **EXIT ▶ OK** to log out of the CDE and return to the CDE Login screen.
   c. Push the power button on the front of the MSCF processor. There is no immediate response for approximately 20 seconds to complete the shutdown. The system should shut down to an `ok` prompt.
   d. At the back of the MSCF processor turn the power switch to Off.

6.5.49.3 Replacement Procedure.

1. Locate and disconnect the AC power cord (71W190) from the defective Backup Storage Device.
2. Disconnect the SCSI cable (71W211) from SCSI B (Bottom SCSI) at the back of the Backup Storage Device.
3. Remove the defective Backup Storage Device from the MSCF Table and set it aside.
4. At the back of the new Backup Storage Device, locate the ID switch and the two buttons located at either side of the ID Switch.
5. Set the ID Switch at the back to of the Backup Storage Device to **3**. Use a small, thin tool (e.g., a scribe) to depress the inset buttons on either side of the ID number, to reach the number 3.
6. Below the ID Switch, locate the Termination Switch (recessed lever). Using a small, thin tool (e.g., scribe), carefully move the Switch lever towards the left side (marked with a **1** for termination forced On.)

7. Reverse steps 1. through 3. to complete installation of the new Backup Storage Device.

8. Turn the power switch On to the Backup Storage Device.

9. If a disk was in the Backup Storage Device at the beginning of this procedure, insert it into the new drive.

10. Restore the MSCF processor to operation as follows:

    a. Turn On the processor using the power switch located at the back of the processor.

    b. Log into the MSCF processor as a normal user.

11. Verify Jaz Drive functionality IAW Figure 6–2 Note 3.

12. There are no follow–on setup procedures for this piece of equipment.

6.5.50 MSCF SURGE SUPPRESSOR UD71E1 REPLACEMENT PROCEDURE.

One technician is required for this procedure.

6.5.50.1 Equipment and Tools Required.

1. None

6.5.50.2 Initial Conditions/Preliminary Setup. (Refer to Figure 1–5 for part location.)

1. Locate the MSCF Surge Suppressor UD71E1.

CAUTION

Failure to perform the applicable shutdown procedures in step 2. could cause serious damage to the MSCF processor and related equipment.

2. At the MSCF Workstation:

    a. At the MSCF processor, if at a CDE Login screen, skip to step c.

    b. If within CDE, click **EXIT ▶ OK** to log out and return to the CDE Login screen.

    c. Push the power button on the front of the Ultra 5 processor. Wait about 20 seconds for the shutdown to complete. The system should shut down to an `OK` prompt.

6.5.50.3 Replacement Procedure.

1. Turn the power switch Off to the Backup Storage Device (UD71A6).

2. DoD and FAA: Turn off the power switch Off to the dedicated Stand–alone Modem (UD71A5).
3. Turn the power switch Off to the Monitor (UD71A2).
4. Turn the power switch to Off to the MSCF processor (UD71A1).
5. Turn the power switch Off to the Surge Suppressor (UD71E1).
6. Locate and disconnect the Surge Suppressor AC power cord from its source.
7. FAA Sites: Disconnect the Modem leased line (71W902A) from the OUT jack on the Surge Suppressor.
8. NWS and DoD Sites: Disconnect the Duplex Jack (UD71CP1) from the OUT jack on the Surge Suppressor.
9. FAA Sites: Disconnect 71W902A from the OUT jack on the Surge Suppressor.
10. Disconnect the TELCO line (W902) from the IN jack on the Surge Suppressor.
11. Disconnect the following AC power cords plugged into the Surge Suppressor:
    a. 71W187, MSCF processor AC power cord
    b. 71W188, Monitor AC power cord
    c. DoD and FAA: 71W189, Stand–alone dedicated Modem AC power cord
    d. 71W190, Backup Storage device AC power cord
12. Remove defective Surge Suppressor and set it aside.
13. Reverse steps 1. through 12. to complete installation of the new Surge Suppressor.
14. There are no follow–on setup procedures for this piece of equipment.

6.5.51 FRAME RELAY HUB ROUTER ASSEMBLY (CISCO 2621XM) UD75 REPLACEMENT PROCEDURE.

6.5.51.1 Equipment and Tools Required

1. None

6.5.51.2 Initial Conditions/Preliminary Setup. (Refer to Figure 1–1 for part location.)

NOTE

Refer to paragraph 6.5.2 for special consideration for replacement procedures.

1. Locate the Frame Relay Hub Router UD75.

6.5.51.3 Replacement Procedure.

CAUTION

Failure to perform the applicable shutdown procedures in step 2. could cause serious damage to the Remote Router.

1. At the back of the Frame Relay Hub Router, turn the power switch to Off.
2. Locate and disconnect the AC power cord (W117) from the Frame Relay Hub Router.

NOTE

Steps 3. and 4. are site specific, so the cable compliment can vary. Ensure you note which cable is connected to which port.

3. Disconnect the Ethernet cables from the built–in Ethernet ports 10/100 ETHERNET 0/0 (FE0) and 10/100 ETHERNET 0/1 (FE1) on the rear of the Frame Relay Hub Router. (Cables W85, W319, and/or W320).
4. Disconnect the Ethernet cables from the four port Ethernet 4E module, ports ETHERNET 0, ETHERNET 1, ETHERNET 2, and ETHERNET 3 on the rear of the Frame Relay Hub Router. (Cables W81, W82, W83, W84, W79, and/or W317).
5. Disconnect cable W318 and plug–in Surge Suppressor UD75A1E2 from the T1 DSU/CSU module port (UD75A1W0) on the rear of the Frame Relay Hub Router.
6. Remove the defective router and set it aside.
7. Set the new router on the table or workstation.
8. Plug the UD75A1E2 Surge Suppressor adapter into the CSU/DSU module T1 port (UD75A1W0), then connect cable W318 to the surge suppressor on the rear of the Frame Relay Hub Router.

NOTE

Steps 9. and 10. are site specific, so the cable compliment can vary.

9. Connect the Ethernet cables to the appropriate ETHERNET port (0 through 3) on the four port Ethernet 4E module on the rear of the Frame Relay Hub Router. (Cables W81, W82, W83, W84, W79 and/or W317).
10. Connect the Ethernet cables to the built–in Ethernet ports 10/100 ETHERNET 0/0 (FE0) and 10/100 ETHERNET 01/ (FE1) on the rear of the Frame Relay Hub Router. (Cables W85, W319, and/or W320).
11. Plug the AC power cord (W117) into the rear of the Frame Relay Hub Router.
12. At the rear of the router, set the power switch to ON (1).

13. This completes the replacement procedure.

14. For the Frame Relay Hub Router setup procedure, see paragraph 6.6.22.

6.5.52 MSCF COLOR PRINTER (XEROX/TEKTRONIX PHASER 750) UD79A1 REPLACEMENT PROCEDURE.

Two technicians are required for this procedure.

6.5.52.1 Equipment and Tools Required.

1. Strapping Tape
2. Scissors

6.5.52.2 Initial Conditions/Preliminary Setup. (Refer to Figure 1–5 for part location.)

1. Locate the Color Printer UD79A1 normally located with the MSCF Workstation UD71.
2. At the MSCF Color Printer, turn the power switch to Off. The power switch is located behind the paper output tray.

6.5.52.3 Replacement Procedure.

1. Locate and disconnect the AC power cord (W129) from its AC power source.
2. Disconnect the AC power cord from the Color Printer; set power cord aside.
3. Disconnect and the Ethernet cable from the back of the Color Printer.
   a. NWS sites: W332
   b. DoD and FAA sites: W333
4. If the paper feed tray, on the left side of the defective Color Printer, is opened close it.
5. Use strapping tape to tape the paper output tray in the up position against the Color Printer.

WARNING

The weight of the Color Printer is approximately 94 pounds. Two technicians are required to lift the printer during removal and replacement.

6. With the help of a second technician, remove the defective Color Printer and set it aside.

NOTE

Save all packing material in case moving or subsequent shipment is necessary.

7. Unpack and set the new Color Printer in place.

   a. Open box, (the instructions are on the box), by removing the 4 plastic guards near the bottom. Lift the entire top of the box off of the pallet.

   b. Unpack the printer accessories and take inventory. Contents should include documentation, power cord, parallel cable adapter, four (4) toner cartridges, and media sampler.

   c. Remove the top plastic bag from the Color Printer. Pull down the bottom plastic bag to expose the Color Printer.

WARNING

The weight of the Color Printer is approximately 94 pounds. Two technicians are required to lift the printer during removal and replacement.

   d. With the help of a second technician, lift the Color Printer from its shipping pallet, using the indents at the front and back of the Color Printer for hand placement. Place the Color Printer onto the MSCF printer table.

8. Remove all the adhesive tape on new Color Printer.

9. Install the toner cartridges. See Figure 6–14 for reference.

CAUTION

When installing the cartridges, be careful not to leave the side door open for an extended time; other components can be damaged by light exposure.

   a. Remove each toner cartridge from its packaging. Make sure all tape is removed.

   b. Remove the shipping cover from each cartridge.

   c. Open the Color Printer toner door located on the right side.

   d. Install each toner cartridge in the slot labeled for its color.

   e. Close the toner door to the Color Printer.

10. Prepare the imaging unit. (Use Figure 6–14 for reference.)

   a. Open the Color Printer front door.

   b. Remove the orange plastic tag inside printer front opening.

   c. Turn the top blue lever up from the `LOOSEN` position to the `TIGHTEN` position to align the triangle on the lever with the triangle on the surface of the imaging unit.

d. Close the Color Printer front door.

11. Add paper to paper tray.

    a. Locate the paper tray, located on the right side below the paper–output tray, and remove the paper tray.

    b. Remove the packing material from inside the tray; twist the plastic lock, pull it out.

    c. Push down the tray's metal plate until it clicks, locking it.

    d. Fan the paper. Tray capacity is 250 sheets.

    e. Place the paper in the tray under the 2 corner tabs.

    f. Return the paper tray to the paper tray slot.

12. Open the front door of Color Printer and place the Users Guide into the pocket located inside the printer door. Close the front door.

13. Connect the Ethernet cable to the port labeled "Ethernet" at the back of the Color Printer.

    a. NWS sites: W332

    b. DoD and FAA sites: W333 if Frame Relay Hub Router UD75 is not installed; W79 or W85 if Frame Relay Hub Router UD75 is installed.

14. Plug the AC power cord (W129) into the at the back of the Color Printer.

CAUTION

To protect the Color Printer from a power surge, make sure the printer power switch is in the Off position before plugging in the cord to the AC Power Source.

15. Plug the other end of the AC power cord into the AC Power Source.

16. Wait about 10 seconds, then turn the power switch On to the Color Printer.

17. The Color Printer goes through a series of self–tests, taking up to 10 minutes to warm–up and print out a startup page.

18. The power–up sequence is complete. The green indicator is On steady, the amber indicator is off, and the front panel message reads `Ready`.

19. For setup procedure, see paragraph 6.6.23.

20. This completes the replacement procedure.

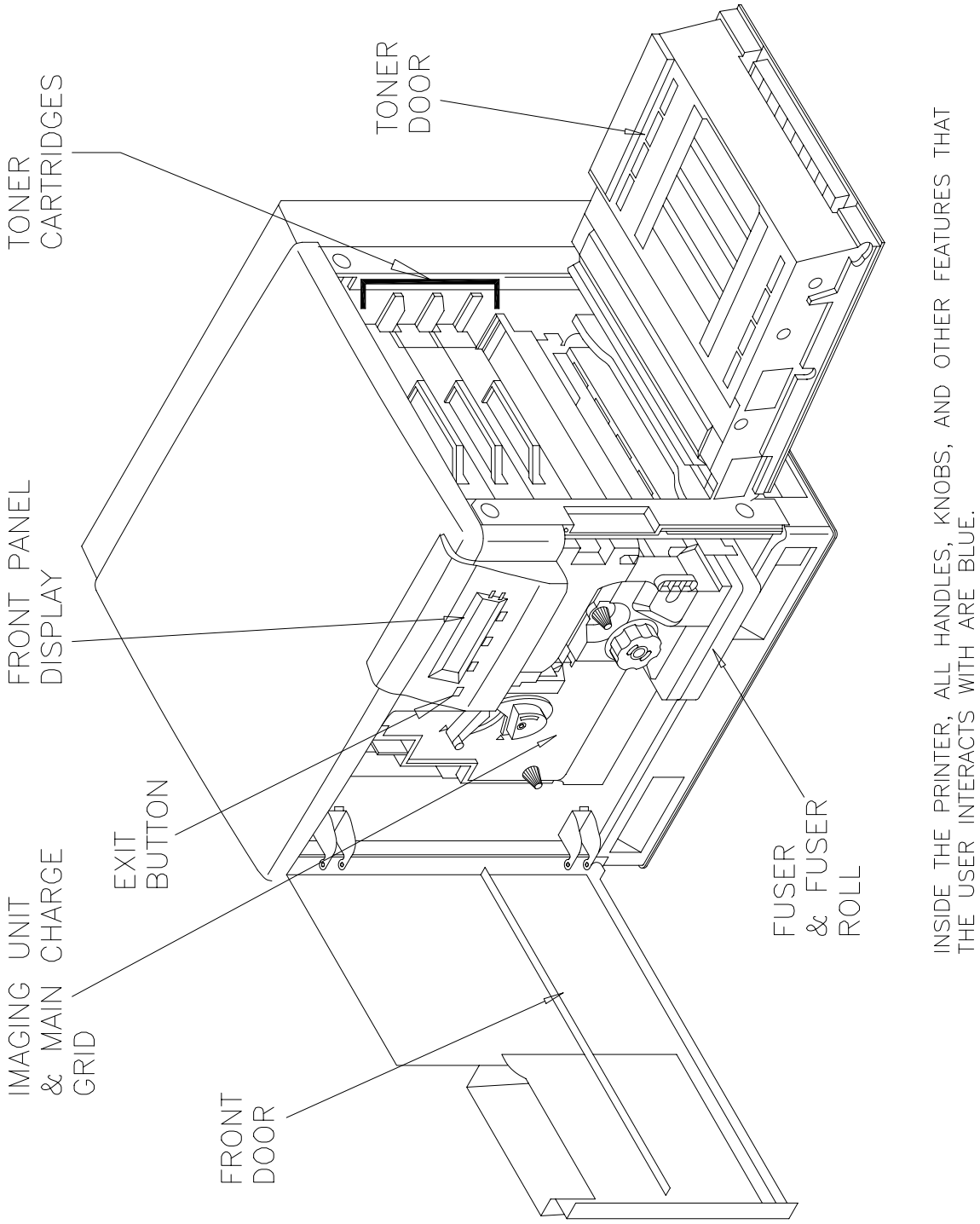

NX1652

Figure 6–14. MSCF Color Printer, Interior View (Xerox/Tektronix)

Section 6.6. Setup Procedures

NOTE

This chapter and its corresponding sections refer to the RPGPCA as UD70. Unless otherwise specified for FAA redundant systems, this information also applies to RPGPCA UD170.

6.6.1 INTRODUCTION.

This section contains the procedures to be used to enable the proper setup/alignment of an RPG LRU following the replacement of a faulty unit. Table 6–9 lists the LRUs for which a setup procedure is required and identifies the paragraph number for the required procedure. Each procedure identifies the personnel, time, and materials necessary to perform the procedure. Additionally, some procedures provide reference information such as the complete menus for software initialized devices. If no procedure is listed then the LRU has been preset prior to being issued, has no site alignment, or has no site adjustment requirements. On completion of the procedure, repeat the initiating performance check and then return to normal operation.

Table 6–9 LRU Setup Procedure Index

Reference Designation UD32	**Name** **Remote RDA Maintenance Terminal**	**Paragraph Number**
A3	STATMUX (Penril VCX–150)	6.6.2
A4	Dial–In Modem (Codex 3260) – 14400/Async	6.6.3
Reference Designation UD70/170	**Name** **RPGPCA**	**Paragraph Number**
A1*	BDDS Processor Assembly (Sun Ultra 5 with PCI card)	6.6.4
A1A1*	Sun Ultra 5 without PCI card	**
A2	Router Assembly (Cisco 3640)	6.6.5
A3*	KVM Switch (Raritan SMX18)	6.6.6
A7	RPG Processor Assembly (Sun Ultra 10 with PCI cards)	6.6.7
A7A1	Sun Ultra 10 without PCI cards	**
A10	Power Administrator (APC MasterSwitch)	6.6.8
A11	UPS Assembly (APC 1400)	6.6.9
A13	LAN Switch (Cisco 2924)	6.6.10
A14A1–A3A	Dial Port (Rack–Mounted) Modem (Codex 3262)	6.6.11
A14A3B–A4B	Dial Port (Rack–Mounted) Modem (Codex 3262)	6.6.12

* Site dependent
** For reference only. Item must be ordered and replaced as an assembly.

Table 6–9 LRU Setup Procedure Index – Continued

Reference Designation UD70/170	Name RPGPCA	Paragraph Number
A14A5	Dedicated Port (Rack–Mounted) AWIPS Modem (Codex 3263). Applies to DoD and FAA Only.	6.6.13
A14A6–A16	Dedicated Port (Rack–Mounted) Modem (Codex 3263)	6.6.14
A14A6–A16	X.25 ITWS Dedicated Modem (Codex 3263) – 33600/Sync. Applies for one to three modems in locations UD70/170A14A6 – A16 only.	6.6.15
A14A21	Dedicated Port (Rack–Mounted) MSCF Modem (Codex 3263). Applies to DoD and FAA Only.	6.6.17
A14A17–A20	Dedicated Port (Rack–Mounted) Modem (Codex 3263).	6.6.16
A15, A16, A17	Communication Server (PTI MPS 800)	6.6.18
A28*, A29*	RMS Power Administrator A and B (Baytech RPC–5)	6.6.19
Reference Designation UD71	**Name MSCF Workstation**	**Paragraph Number**
A1	MSCF Processor Assembly (Sun Ultra 5 with PCI cards)	6.6.20
A1A1	Sun Ultra 5 without PCI cards	**
A5	MSCF Stand–alone Dedicated Port Modem (Codex 3261 FAST)	6.6.21
Reference Designation UD75	**Name Frame Relay Hub Router**	6.6.22
Reference Designation UD79	**Name MSCF Color Printer**	**Paragraph Number**
A1	MSCF Color Printer (Xerox/Tektronix Phaser 750)	6.6.23

* Site dependent
** For reference only. Item must be ordered and replaced as an assembly.

NOTES

This section discusses some graphical manipulations using a mouse. The word "click" indicates a standard left mouse click. The symbol ▶ is used to indicate subsequent left clicks through sub–menu selections. When a right click or double–click is required, it is specifically indicated.

Since the keyboard in use may have either an "Enter" key or a "Return" key, **<CR>** is used to delineate the end of the command line when shown in the examples. Unless told otherwise, each shown command line in the examples must be "entered" to be processed.

Mandatory commands, computer feedback and prompts, and variable commands are each presented in a distinctive font.

Mandatory commands entered by the user are in a bold type font and must be typed exactly as shown.

`Computer feedback and prompts`, are a regular type key font, which signifies the name of an information block or prompt. Either way the system is awaiting feedback from the user.

Variable commands represent a command variable that is distinctive for each terminal. These commands must be entered by the user and are site specific. An italic font defines these command variables. This variable placeholder is replaced with a name, address, etc. unique to each system and the user is told how to formulate, or directed to where to find, this information.

6.6.2 STATMUX UD32A3 (PENRIL VCX–150) SETUP PROCEDURE.

This procedure requires one technician and 0.5 hours.

6.6.2.1 Equipment and Tools Required.

1. None

6.6.2.2 Initial Conditions/Preliminary Setup. The STATMUX is setup via PORT 1 using Remote RDA Maintenance Terminal CPU/Monitor UD32A9/A10, system console side. However, the configuration of Terminal UD32A1 is different than the configuration needed to configure STATMUX UD32A3.

NOTES

STATMUX UD32A3 accepts commands in both upper and lower case, however it converts most upper case entries to lower case. For clarity ensure all entries are made in lower case.

Due to differences in STATMUX firmware versions, some display menu selections or prompts will vary between models.

1. Perform the following steps to reconfigure Remote RDA Terminal UD32A10.

   a. Set Remote RDA Maintenance Terminal Dual A/B Switch UD32A2 to channel 1. (All commands are entered at the System Console.)

   b. Press **<Shift>** and **<Setup>** keys simultaneously. The Setup menu appears.

   c. Press **<F1>**. The Quick setup menu appears.

   d. Press **<Space Bar>** until `VT-100` is highlighted.

   e. Press **<Down Arrow>** and **<Right Arrow>** keys to highlight EIA FORMAT DATA field.

   f. Press **<Space Bar>** until `8/1/N` is highlighted.

   g. Press **<F14>**. The message `Save all? (Y/N)` appears.

   h. Enter: **y<CR>**. This exits the Setup menu.

6.6.2.3 Procedure.

1. Locate power switch located at rear panel of STATMUX. Ensure power switch is On, if not turn on.

2. Remove front panel of STATMUX by holding either side of panel and pulling it directly out.

3. Locate button at lower right–hand corner of STATMUX chassis. This button is used to set STATMUX to the default configuration.

4. Depress button while turning power to the STATMUX Off and then On. Keep button depressed for at least 20 seconds.

5. Press **<CR>** at the system console until `CONNECT TO:` prompt appears.

6. Enter: **set<CR>**. The STATMUX displays the Set Terminal Characteristics menu shown in Figure 6–15.

7. Change terminal characteristics to make it compatible with the STATMUX as follows:

   a. Enter: **3<CR>**. The CHANGE CHARACTER LENGTH options message appears.

b. Enter: **3<CR>**. This selects the character length to be 7 bits. The SET TERMINAL CHARACTERISTICS menu appears as shown in Figure 6–15.

c. Enter: **4<CR>**. The CHANGE PARITY options appear.

d. Enter: **3<CR>**. This selects the parity to be even.

```
**** Set Terminal Characteristics ****

                                Current                 Requested
  1.  Exit
  2.  Baud rate                 –9600                   –9600
  3.  Character length          –8 bits                 –8 bits
  4.  Parity                    –None                   –None
  5.  Stop bits                 –1 stop bit             –1 stop bit
  6.  Echo                      –CPU & VCX services     –CPU & VCX services
  7.  Terminal type             –Unsupported            –Unsupported
  8.  Device flow control       –XON/XOFF               –XON/XOFF
  9.  Port flow control         –XON/XOFF               –XON/XOFF
 10.  Messages                  –All                    –All
 11.  Break key                 –Ignore                 –Ignore
 12.  Control state key         –^@                     –^@
 13.  Control hold key          –^@                     –^@
 14.  Broadcast option          –Accept routine         –Accept routine
 15.  Apply changes*

Enter selection:
```

* Could also be shown as item 16 on the menu.

Figure 6–15 Set Terminal Characteristics Menu

e. Enter: **7<CR>**. The CHANGE TERMINAL TYPE options appears.

f. Enter: **25<CR>**. This selects the Perkin Elmer 1251/1245 Super Owl terminal, which is the closest terminal configuration to the Concurrent 6312 setup. The SET TERMINAL CHARACTERISTICS menu is displayed.

g. Enter: **15** or **16<CR>** (for `Apply Changes` on user's menu). The terminal displays the following message:

```
SET YOUR TERMINAL, THEN ENTER <CR>
```

NOTE

Complete step 8. before pressing return.

8. Change the configuration of the Remote RDA Terminal UD32A10 back to the previous configuration, as follows:

   a. Press **<Ctrl>** and **<F3>** keys simultaneously. The SETUP CONFIGURATION menu is displayed.

   b. Press **<Space Bar>** until 6312 is highlighted.

   c. Press **<Down>** and **<Right>** arrow keys until EIA DATA FORMAT field is highlighted.

   d. Press **<Space Bar>** until `7/1/E` is highlighted.

   e. Press **<F14>**. The message `Save all? (Y/N)` appears.

   f. Enter: **y<CR>**. This exits the Setup menu.

   g. Press **<CR>** until the SET TERMINAL CHARACTERISTICS menu is displayed.

   h. Enter: **1<CR>**. The `Connect to:` prompt appears.

   i. Enter: **configure<CR>**. The FIRST CONFIGURATION SERVICE submenu is displayed as shown in Figure 6–16.

```
1) ADD/MODIFY configurations, user lists or
texts
2) INITIALIZE configuration storage

Enter selection [or ESC to exit]:
```

Figure 6–16. First Configuration Service Submenu

9. Initialize module and enter global configuration, as follows:

   a. Enter: **2<CR>**. The following prompt is displayed: `Are you sure you want to INITIALIZE entire module (y/n)?n`.

   b. Enter: **y<CR>**. The FIRST CONFIGURATION SERVICE submenu is displayed.

c. Enter: **1<CR>**. The LEVEL II CONFIGURATION menu is displayed, as shown in Figure 6–17.

```
No configurations defined.

1) ADD a new configuration
2) ADD a new user list
3) ADD a new text
4) EXAMINE/MODIFY a configuration, user list
or text
5) DELETE a configuration, user list or text
6) LIST existing configurations, user lists and texts
7) SELECT configuration to run

Enter selection [or ESC to exit]:
```

Figure 6–17. Level II Configuration Menu

d. Enter: **1<CR>**. The following prompt is displayed: `New configuration name:`.

e. Enter: **remside<CR>**. The GLOBAL PARAMETERS FORM menu is displayed, as shown in Figure 6–18. The prompt `Description:` appears.

f. Enter: **remside<CR>**. The prompt `Installation Name:` appears.

g. Enter: **remside<CR>**. The prompt `Connect prompt:` appears.

h. Enter: **remside<CR>**. The prompt `Default Access Rights:` appears.

i. Press **<CR>**. The prompt `Logging port:` appears.

j. Press **<CR>**. The prompt `Logging enabled` appears.

k. Press **<CR>**. The prompt `Binary output:` appears.

l. Enter: **1<CR>**. The prompt `Logging mask:` appears.

m. Press **<CR>**. The prompt `Modem network mgr port:` appears.

n. Press **<CR>**. The prompt `addr:` appears.

o. Press **<CR>**. The prompt `IOK log message timer:` appears.

p. Press **<CR>**. The prompt `Node name:` appears.

q. Press **<CR>**. The prompt `User list name:` appears.

```
Config:                                  [10/64 used]
            Description: >
       Installation name:
         Connect prompt:
  Default Access Rights:
           Logging port:
           Logging card: No          Binary output:No       Logging mask:
Modem network mgr port:  1
                   addr: 0
 10K log message timer:
              Node name:
            User list name:
         Local time zone:
                 Local time when it is midnight Greenwich Mean time _
                  Hours: 0                Minutes:00
         Display format: U.S. (mm/dd/yy hh:mm:ss)
 Queue length threshold: 30
     ------<CR>=next field-----^E=previous field-----ESC=accept screen-----

Description:
```

Figure 6–18. Global Parameters Form Menu

r. Press **<CR>**. The prompt `Local time zone:` appears.

NOTE

The number corresponding to local time zone for Eastern time zone during daylight savings time is 4, because the Eastern time zone is 4 hours behind Greenwich Mean Time.

s. Enter: *number corresponding to local time zone* **<CR>**. The prompt `Hours:` appears.

NOTE

"Local hour" for Eastern time zone when it is midnight Greenwich mean time is 20, because the Eastern time zone is 4 hours before midnight Greenwich Mean Time.

t. Enter: *number corresponding to local hour when it is midnight Greenwich Mean Time* **<CR>**. The prompt `Minutes:` appears.

u. Press **<CR>**. The prompt `Display format:` appears.

v. Press **<CR>**. The prompt `Queue length threshold:` appears.

w. Press **<CR>**. The LEVEL II CONFIGURATION menu is displayed.

x. Enter: **4<CR>**. The following message appears: `Configuration, user list, or text name: remside`.

y. Enter: **remside** (if not already following prompt) **<CR>**. The SECOND CONFIGURATION ADDED TO FORM menu is displayed, as shown in Figure 6–19.

```
    Name     Type                Brief Description

No names defined



  1) ADD new name(s)
  2) EXAMINE/MODIFY a name
  3) DELETE a name
  4) LIST existing names
  5) EXAMINE/MODIFY global configuration parameters
  6) MERGE all names with those from another configuration

Enter selection [or ESC to exit]:
```

Figure 6–19. Second Configuration Added To Form Menu

z. Enter: **1<CR>**. The prompt `New entry name:` appears.

10. Enter port names and parameters, as follows:

NOTE

Due to differences in STATMUX firmware versions, some display menu selections or prompts will vary between models. Firmware version 2.8.4 or higher has new or additional selections. Operators should follow the display prompts and locate the appropriate data input setup and proceed from that point.

a. Enter: **rmsc1<CR>**. The NAME TYPE FORM menu is displayed, as shown in Figure 6–20.

```
Config:  ucpside          Name: usc1          [5/64 used]
   Name type:>Asynchronous line(s)   (Slot 1)
    ------<CR>=next field-----^E=previous field------ESC=accept screen-----


1) Asynchronous line(s)      (Slot 1)      5) Services, controlled access
2) Trunk Line                (Slot 2)      6) X.2 port  (Slot 2)
3) Speed connect                           7) String
4) Group

Name type:
```

Figure 6–20. Name Type Form Menu

b. Enter: **1<CR>**. The ASYNCHRONOUS LINES MAIN FORM menu is displayed. The prompt `Starting port` appears.

c. Enter: **1<CR>**. This selects rmsc1 as the port. The prompt `Ending port:` appears.

d. Enter: **1<CR>**. This selects rmsc1 as the port. The prompt `Baud Rate:` appears.

e. Enter: **12<CR>**. This selects 9600 as the baud rate. The prompt `Character length:` appears.

f. Enter: **2<CR>**. This selects 7 bits as the character length. The prompt `Stop bits:` appears.

g. Enter: **1<CR>**. This selects 1 bit as the stop bit. The prompt `Parity:` appears.

h. Enter: **3<CR>**. This selects Even parity. The prompt `Escape delay:` appears.

i. Enter: **1<CR>**. The prompt `Attachment control:` appears.

j. Enter: **1<CR>**. This number is specific to rmsc1. The prompt `Device flow control:` appears.

k. Enter: **2<CR>**. This selects XON/XOFF as the device flow control. The prompt `Port flow control:` appears.

l. Enter: **2<CR>**. This selects XON/XOFF as the port flow control. The prompt `Timeout (mins):` appears.

m. Enter: **Ø<CR>**. This selects a timeout of zero. The prompt `Timeout direction:` appears.

n. Enter: **2<CR>**. This selects Transmit. The prompt `Direction:` appears.

o. Enter: **2<CR>**. This selects Originate as the direction. The prompt `Auto connect A:` appears.

p. Enter: **t1.sc1<CR>**. This selection is specific to rmsc1. The prompt `Auto connect B:` appears.

q. Press **<CR>** `Auto.con Limit:` appears.

r. Press **<CR>**. The prompt `Echo:` appears.

s. Enter: **1<CR>**. This selects CPU and VCX services. The prompt `Messages:` appears.

t. Enter: **1<CR>**. This selects all messages. The prompt `Confirm Connections:` appears.

u. Enter: **1<CR>**. This selects no confirmation. The prompt `Login required:` appears.

v. Enter: **1<CR>**. This selects no login. The prompt `Ignore routine bcasts:` appears.

w. Enter: **1<CR>**. This selects not to ignore routine broadcasts. The prompt `Detach after disconnect:` appears.

x. Enter: **2<CR>**. The prompt `BREAK key:` appears.

y. Enter: **1<CR>**. This selects the pass through option for the BREAK key. The prompt `Control state char:` appears.

z. Enter: **Ø<CR>**. This selects the option 0. The prompt `Hold character:` or `Forward toggle char:` appears.

aa. Enter: **Ø<CR>**. This selects the option 0. The prompt `Backward toggle char:` appears.

ab. Enter: **Ø<CR>**. This selects the option 0. The prompt `Channel priority:` appears.

ac. Enter: **1<CR>**. This selects channel 1 as the priority channel. The prompt `Detach after disconnect:` appears or `Disconnect delay (secs)`.

ad. Enter: **2** or **Ø<CR>**. (2 for `Detach after disconnect` prompt or 0 for `Disconnect delay (secs):` prompt.) This selects the option `"yes" or zero delay`. The prompt `Terminal type:` appears.

ae. Enter: **25<CR>**. This selects the Perkin Elmer 1251/1245 Super Owl terminal type. The prompt `Originate attachment string name:` appears.

af. Press **<CR>**. The prompt `Originate detachment string name:` appears.

ag. Press **<CR>**. The prompt `Attachment text name:` appears.

ah. Press **<CR>**. The prompt `Originate access rights:` appears.

ai. Press **<CR>**. The prompt `New entry name:` appears.

11. Repeat step 10. for all port names listed in Table 6–10. For steps a., c., d., j., p. and y. the values entered should be replaced with the applicable values listed in Table 6–10.

12. Enter the trunk name, as follows:

a. Enter: **t1<CR>**. The NAME Enter FORM menu is displayed.

Table 6–10. STATMUX UD32A3 Port Variables

PORT NAME	STARTING PORT	ENDING PORT	ATTACH-MENT CON-TROL	AUTO CONNECT A:	BREAK KEY
rmac1	2	2	2	t1.ac1	2
rmsc2	3	3	1	t1.sc2	1
rmac2	4	4	2	t1.ac2	2
servport	10	10	1	Press space bar 7 times	1

b. Enter: **2<CR>**. The TRUNK LINE MAIN FORM menu displays `port`.

c. Enter: **1<CR>**. The prompt `Port view, clocking:` appears.

d. Enter: **1<CR>**. The prompt `Baud rate:` appears.

e. Enter: **5<CR>**. The prompt `Virtual circuits:` appears.

f. Enter: **1Ø<CR>**. The prompt `Multiplexing protocol:` appears.

g. Enter: **1<CR>**. The prompt `Login required:` appears.

h. Enter: **1<CR>**. The prompt `Trunk timeout (secs):` appears.

i. Enter: **6Ø<CR>**. The prompt `Utilization threshold:` appears.

j. Enter: **75<CR>**. The prompt `Retransmission threshold:` appears.

k. Enter: **25<CR>**. The prompt `Statistics Logging Timer:` appears.

l. Enter: **Ø<CR>**. The prompt `Answer access rights:` appears.

m. Press **<CR>**. The prompt `Password override:` appears.

n. Enter: **1<CR>**. The prompt `Originate access rights:`

o. Press **<CR>**. The prompt `New entry name:` appears.

p. Press **<CR>**. The SECOND CONFIGURATION ADDED TO FORM menu appears.

q. Press **<Ctrl>** and **[** keys simultaneously. The LEVEL II CONFIGURATION menu is displayed.

r. Enter: **7<CR>**. This selects SELECT the configuration to run. The prompt `Select the configuration to run: remside` appears.

s. Press **<CR>**. The LEVEL II CONFIGURATION menu is displayed.

t. Press **<Ctrl>** and **[** keys simultaneously. The FIRST CONFIGURATION SERVICE submenu is displayed.

13. Toggle the power using the power switch at the rear of STATMUX UD32A3.

14. Replace front panel of STATMUX.

15. This completes the setup procedure.

6.6.3 DIAL–IN MODEM UD32A4 (CODEX 3260) – 14400/ASYNC SETUP PROCEDURE.

This procedure requires one technician and 0.5 hours.

6.6.3.1 Equipment and Tools Required.

1. None

6.6.3.2 Initial Conditions/Preliminary Setup. System should be in normal operating mode. Verify modem card DIP switches are set correctly IAW Figure 6–21.

NOTE

Due to differences in modem models, some default display readings will vary between sites. Operators should carefully note desired modem settings and follow data input sequences until these settings are accomplished. (Example 1: While some systems default to a setting of DTE Rate of 14.4, others default to 33.6. In the event the system defaults to 33.6, and the desired reading is 14.4, follow the button sequence until the display reading is 14.4. Example 2: While following procedures for the S–Reg reading,

the system may begin with S–Reg = 030 or it may default to some other reading. If the desired reading is S–Reg = 180, perform the button sequence until this reading is achieved).

6.6.3.3 Procedure. If the modem being installed is not brand new, the password must be confirmed before proceeding with normal setup procedures. Paragraph 6.6.3.3.1 provides password confirmation procedures and paragraph 6.6.3.3.2 provides normal setup procedures.

6.6.3.3.1 Modem Password Confirmation Procedure. To confirm the modem password perform the following steps.

1. Press the **<RETURN>** button until display reads `Disconnect T/D?`
2. Press the **<DOWN>** button until display reads `FP SECURITY`
3. Press the **<ACROSS>** button until display reads `Enter Password?`
4. Press the **<ENTER>** button until display reads `ENTER PW:0000`
5. Press the **<DOWN>** and **<ACROSS>** buttons until display reads `ENTER PW:1111`
6. Press the **<ENTER>** button until display reads `Passwd Unlocked`
7. Press the **<RETURN>** button until display reads `Disconnect T/D?`

6.6.3.3.2 Setup Procedure.

NOTE

In steps where the ":/=" reference is made, either the ":" or "=" is acceptable. The ":" means the option is not the current setting. The "=" means the option is the current setting. In either case, during the step, when the (**ENTER**) button is depressed, the displayed option becomes the current setting. If the option had been displayed with a ":", it becomes an "=". This procedure is to be used for verification or alignment. The X (X = don't care) can equal any of the possible options available.

1. Press the **<ACROSS>** button until the display reads `Reinit Memory?`
2. Press the **<ENTER>** button. The display reads `Reinit All Mem?`
3. Press the **<ENTER>** button again. The display reads `3261 Initial`
4. Press the **<RETURN>** button until the display reads `Disconnect T/D?`
5. Press the **<ACROSS>** button until the display reads `Power Up In = X`

6. Press the **<DOWN>** button until the display reads `Power Up In (:/=) 1`
7. Press the **<ENTER>** button. The display reads `Power Up In = 1`
8. Press the **<ACROSS>** button until the display reads `Enter Phone # = X`
9. Press the **<ENTER>** button. The display reads `*`
10. Press the **<DOWN>** and **<ACROSS>** buttons to enter each digit of the phone number and password.

    Format is as follows:

    AA..AA@PPPPBBB..BB*Ø;H

    where;
    AA..AA = phone number of RDA modem

    PPPP = group telephone # password at RDA modem. This number is assigned by the user. Any four letters are acceptable. It is set during modem UD105A21 setup procedure, refer to NWS EHB 6–510. Record password.

    BB..BB = phone number of remote RDA Maintenance Terminal modem
11. Press the **<ENTER>** button. The display reads `Enter Phone #=1`
12. Press the **<ACROSS>** button until the display reads `Save Change, =1`
13. Press the **<RETURN>** button until the display reads `Disconnect T/D?`
14. Press the **<ACROSS>** button until the display reads `Select Options = X`
15. Press the **<DOWN>** button until the display reads `Select Options (:/=) 1`
16. Press the **<ENTER>** button. The display reads `Select Complete!`
17. Press the **<ACROSS>** button until the display reads `Power Up In = X`
18. Press the **<DOWN>** button until the display reads `Power Up In (:/=) 1`
19. Press the **<ENTER>** button. The display reads `Power Up In = 1`
20. Press the **<ACROSS>** button until the display reads `Dial From # = X`
21. Press the **<DOWN>** button until the display reads `Dial From # (:/=) 1`
22. Press the **<ENTER>** button. The display reads `Dial From # = 1`
23. Press the **<DOWN>** button until the display reads `MODULATION OPT'S`
24. Press the **<ACROSS>** button until the display reads `Max Rate = X`
25. Press the **<DOWN>** button until the display reads `Max Rate (:/=) 14.4`

26. Press the **<ENTER>** button. The Ddisplay reads `Max Rate = 14.4`
27. Press the **<ACROSS>** button until the display reads `Min Rate = X`
28. Press the **<DOWN>** button until the display reads `Min Rate (:/=) 4800`
29. Press the **<ENTER>** button. The display reads `Min Rate = 4800`
30. Press the **<ACROSS>** button until the display reads `Longspace = X`
31. Press the **<DOWN>** button until the display reads `Longspace (:/=) On`
32. Press the **<ENTER>** button. The display reads `Longspace = On`
33. Press the **<RETURN>** button until the display reads `MODULATION OPT'S`
34. Press the **<DOWN>** button until the display reads `ACU OPT'S`
35. Press the **<ACROSS>** button until the display reads `ACU Select = X`
36. Press the **<DOWN>** button until the display reads `ACU Select (:/=) V25b`
37. Press the **<ENTER>** button. The display reads `ACU Select = V25b`
38. Press the **<ACROSS>** button until the display reads `AT Form = X`
39. Press the **<DOWN>** button until the display reads `AT Form (:/=) Sync Data`
40. Press the **<ENTER>** button. The Ddisplay reads `AT Form = Sync Data`
41. Press the **<ACROSS>** button until the display reads `No ACU Form = X`
42. Press the **<DOWN>** button until display reads `No ACU Form (:/=) Sync`
43. Press the **<ENTER>** button. The Ddisplay reads `No ACU Form = Sync`
44. Press the **<ACROSS>** button until the display reads `Answer = X`
45. Press the **<DOWN>** button until the display reads `Answer (:/=) Ring #2`
46. Press the **<ENTER>** button. The display reads `Answer = Ring #2`
47. Press the **<ACROSS>** button until the display reads `Async Echo = X`
48. Press the **<DOWN>** button until the display reads `Async Echo (:/=) Off`
49. Press the **<ENTER>** button. The display reads `Async Echo = Off`
50. Press the **<ACROSS>** button until the display reads `LPDA2 Det = X`
51. Press the **<DOWN>** button until the display reads `LPDA2 Det (:/=) Disab`

52. Press the **<ENTER>** button. The display reads `LPDAZ Det = Disab`
53. Press the **<RETURN>** button until the display reads `ACU OPT'S`
54. Press the **<DOWN>** button until the display reads `TERMINAL OPT'S`
55. Press the **<ACROSS>** button until the display reads `DTE Rate = X`
56. Press the **<DOWN>** button until the display reads `DTE Rate (:/=) 14.4`
57. Press the **<ENTER>** button. The display reads `DTE Rate = 14.4`
58. Press the **<ACROSS>** button until the display reads `RTS = X`
59. Press the **<DOWN>** button until the display reads `RTS (:/=) Normal`
60. Press the **<ENTER>** button. The display reads `RTS = Normal`
61. Press the **<ACROSS>** button until the display reads `CTS = X`
62. Press the **<DOWN>** button until the display reads `CTS (:/=) Normal`
63. Press the **<ENTER>** button. The display reads `CTS = Normal`
64. Press the **<ACROSS>** button until the display reads `DCD = X`
65. Press the **<DOWN>** button until the display reads `DCD (:/=) Normal`
66. Press the **<ENTER>** button. The display reads `DCD = Normal`
67. Press the **<ACROSS>** button until the display reads `DSR = X`
68. Press the **<DOWN>** button until the display reads `DSR (:/=) Normal`
69. Press the **<ENTER>** button. The display reads `DSR = Normal`
70. Press the **<RETURN>** button until the display reads `TERMINAL OPT'S`
71. Press the **<DOWN>** button until the display reads `FP SECURITY`
72. Press the **<ACROSS>** button until the display reads `Password = X`
73. Press the **<DOWN>** button until the display reads `Password (:/=) Enable`
74. Press the **<ENTER>** button. The display reads `Password = Enable`
75. Press the **<ACROSS>** button until the display reads `Change Password?`
76. Press the **<ENTER>** button. The display reads `Old PW : 0000`
77. Press the **<DOWN>** and **<ACROSS>** buttons to enter old password. (If password has neveer been set, the factory default password is 0000)

77. Press the ▼ and ▶ **<DOWN>** and **<ACROSS>** buttons to enter old password. (If password has never been set, the factory default password is 0000)

78. Press the ◎ **<ENTER>** button. The display reads `New PW : 0000`

79. Press the ▼ and ▶ **<DOWN>** and **<ACROSS>** buttons to enter new password. `Password = 1111`

80. Press the ◎ **<ENTER>** button. The display reads `Verify PW : 1111`

81. Press the ◎ **<ENTER>** button. The display reads `Password Saved!`

82. Press the ◩ **<RETURN>** button until the display reads `Disconnected T/D?`

83. Press the ▶ **<ACROSS>** button until the display reads `Save Changes = 1`

84. Press the ◎ **<ENTER>** button. The display reads `Saving Options` followed by `Save Completed!`

85. Press the ◩ **<RETURN>** button until the display reads `Save Changes = 1`

86. Press the ◩ **<RETURN>** button until the display reads `Disconnected T/D?`

87. Press the ▼ **<DOWN>** button until the display reads `FP SECURITY`

88. Press the ▶ **<ACROSS>** button until the display reads `Set Protection?`

89. Press the ◎ **<ENTER>** button. The display reads `Password Protected`

90. Press the ◩ **<RETURN>** button until the display reads `FP Security`

91. Press the ◩ **<RETURN>** button until the display reads `Disconnect T/D?`

92. Press the ▶ **<ACROSS>** button until the display reads `Dial From Number = 1`

93. Press the ◎ **<ENTER>** button. The display reads `Dial From Number = 1`

6.6.4 BDDS PROCESSOR ASSEMBLY (SUN ULTRA 5) UD70A1 SETUP PROCEDURE.

This procedure requires one technician and takes 1.0 hours.

6.6.4.1 Equipment and Tools Required.

1. Site mnemonic.
2. System Software Distribution CD–ROM Disk.

6.6.4.2 Initial Conditions/Preliminary Setup. The BDDS processor Assembly UD70A1 is installed and awaiting power in the RPGPCA cabinet UD70. The Raritan KVM Switch is set to

BDDS processor for keyboard, video, and mouse use. This procedure would normally be used after replacement of the BDDS processor or the BDDS processor Hard Disk.

6.6.4.3 Procedure.

1. For NWS and DoD sites to access the BDDS processor:

   a. Depressing the **<Scroll Lock>** button twice on the keyboard will cause the CDE Login screen or the `Selection Menu` to appear on the monitor.

   b. If a CDE Login screen menu appears, continue with this step, otherwise continue to step c. Enter **raritan<CR>** for the user (no password). The `Selection Menu` will appear on the monitor.

   c. Under normal conditions, the RPG processor is `Channel 1`, the BDDS processor is `Channel 2`, and KBD Failure is `Channel 3`.

   d. Using the ↓ and ↑ keys on the keyboard highlight the BDDS channel. Press **<CR>** to invoke the selection.

2. At the back of the BDDS processor, turn the power switch to On (1).

3. Once the processor starts to boot, press the **<Stop>** and the **A** keys (simultaneously). Feedback is an `ok` prompt.

4. Perform a BDDS processor full system software load beginning with step 7 of Table 4–53.

5. Reestablish the BDDS processor user accounts by completing Table 4–83.

6. This completes the setup procedure.

6.6.5 ROUTER ASSEMBLY (CISCO 3640) UD70A2 SETUP PROCEDURE.

This procedure requires one technician and takes 0.75 hours.

6.6.5.1 Equipment and Tools Required.

1. Copy of local processor Hosts File.

6.6.5.2 Initial Conditions/Preliminary Setup.

1. The Router (UD70A2) is installed and connected to the LAN Switch (UD70A13) in its normal manner. The RPG processor is fully loaded, operational and connected to the LAN Switch (UD70A13) in its normal manner within the RPGPCA cabinet UD70.

2. For NWS and DoD sites to access the RPG processor:

   a. Depressing the **<Scroll Lock>** button twice on the keyboard will cause the CDE Login screen or the `Selection Menu` to appear on the monitor.

b. If a CDE Login screen appears, continue with this step, otherwise continue to step c. Enter **raritan<CR>** for the user (no password). The `Selection Menu` will appear on the monitor.

c. Under normal conditions, the RPG processor is `Channel 1`, the BDDS processor is `Channel 2`, and KBD Failure is `Channel 3`.

d. Using the ↓ and ↑ keys on the keyboard highlight the RPG channel. Press **<CR>** to invoke the selection.

3. At the RPG processor, if a CDE Login screen is displayed, login as the normal user.

4. At a prompt in the Terminal window, enter: **tip –96ØØ /dev/cua/6<CR>**

5. After the `connected` feedback appears, enter: **<CR>** to finish establishing the connection. A prompt should appear.

6. Continue with paragraph 6.6.5.3 to complete the configuration procedure.

6.6.5.3 Router Configuration Procedure

NOTE

For simplicity with this procedure the possible *hostname* (**rtr**, **rtr1**, or **rtr2**) is referred to as `rtr` for the remainder of this procedure. When an entry requires the router *hostname*, the user needs to enter the appropriate hostname as directed by the procedure.

NOTE

For an initial configuration, the default `Router>` prompt appears. If this is a reconfiguration of the router `hostname>` will be the prompt (after password is entered below).

1. If this is an initial configuration of the router, skip to step 4. Router will automatically boot to the step 4. prompt. However, it is required that this procedure be restarted beginning with step 2.j. after the initial configuration parameters are entered (steps 4. through step 11.). For a reconfiguration of the router continue to step 2.

2. If this Router is being reconfigured (not an initial configuration), continue with this step. This step uploads a default Initial Operating System (IOS) into the Router.

   a. If prompted, enter: *site–selected–password*. If this is a new box that may have been previously tested by NRC, it will either have no password set for the CONSOLE port or will use a default password of **cisco**.

   b. At the `rtr>` prompt enter: **enable<CR>**

   c. If prompted, enter: *site–selected–password*. If this is a new box that may have been previously tested by NRC, it will either have no password set for the "enable" level or will use a default password of **cisco**.

d. Enter: **erase startup–config<CR>**

e. Feedback: `Erasing the nvram filesystem will remove all configuration files! Continue? [confirm].`

f. Enter: **<CR>**

g. Feedback: `[OK].`

h. Wait for feedback: `Erase of nvram: complete`
`%SYS-7-NV_BLOCK_INIT: Initialized the geometry of nvram.`
If the `rtr#` prompt does not reappear, press **<CR>** to get back to a `rtr#` prompt.

NOTE

Cycling power to the router can be accomplished by two means, manually or by keyboard command. If manually turning the power switch at the rear of the router to off, then back on, then the tip session will have to be reestablished per paragraph 6.6.5.2, steps 4. and 5. In the following step, the keyboard command is used.

i. Cycle power to the router by performing the following steps:

(1) At the `rtr#` prompt, enter: **reload<CR>**

(2) At the `[confirm]` prompt, enter: **<CR>**

After the router boots, proceed to step 4. After completion of step 4. through step 11., this procedure will be restarted beginning with 2.j.

j. Enter the following file upload string, dependent on system and/or channel:

(1) For single channel or Redundant Channel 1 enter:
copy tftp://172.25.===.1/c364Ø.bin flash:<CR>
The IP–address is the RPG processor IP–Address and === is the site–specific subnet number. Enter the correct subnet referencing the hosts file.

(2) For Redundant Channel 2 enter:
copy tftp://172.25.===.71/c364Ø.bin flash:<CR>
The IP–address is the RPG processor IP–Address and === is the site–specific subnet number. Enter the correct subnet referencing the hosts file.

k. Feedback: `Destination filename[c3640.bin]?`

l. Enter: **<CR>**

NOTE

If the exact same IOS file is being uploaded into the router, continue with Steps m. and n. Otherwise, skip to step o. Read the feedback to determine the situation.

m. Feedback: `%Warning:There is a file already existing with this name Do you want to over write? [confirm]`

n. Enter: **<CR>**

o. Feedback: `Accessing tftp://172.25.===.1/c3640.bin...`
`Erase flash: before copying? [confirm].`

p. Enter: **<CR>**

q. Feedback: `Erasing the flash filesystem will remove all files! Continue? [confirm]`

r. Enter: **<CR>**

s. Feedback: `Erasing device...` . Wait for approximately 30 seconds while older file is erased and newer file loads.

CAUTION

The operating system file has just been erased and it is critical that the new operating system correctly loads into flash:. **DO NOT** cycle power to the router unless the new file is correctly loaded as indicated by the checksum verification message in the next step. As indicated in step t., if the checksum verification message is not received, steps j. through t. must be repeated. Carefully verify step j. entries and ensure the RPG processor is operating since the file is uploaded from the RPG processor.

t. Ensure the `Verifying checksum...OK` message appears followed by the prompt before cycling power in the next step. If `Verifying checksum...OK` does not appear, repeat steps j. through t. before continuing.

u. Cycle power to the Router by performing the following steps:

(1) At the Terminal window prompt, enter: **reload <CR>**

(2) At the `[confirm]` prompt, enter: **<CR>**

NOTE

Throughout this procedure, the Router state is changed and feedback messages are presented while the user is trying to complete entries. To return to an entry prompt, press **<CR>**.

3. Once power is returned to the Router, it reloads the default software. When complete, the last line of feedback states:
`--- System Configuration Dialog ---`.

4. Feedback: `Would you like to enter initial configuration dialog? [yes/no]:`.

5. Enter: **n<CR>**

6. If the feedback asks: `Would you like to terminate autoinstall? [yes]:` continue to next step, otherwise skip to step 8.

7. Enter: **<CR>**

8. Feedback: `Press RETURN to get started:`. Numerous state change messages will be noted at this time. Wait approximately 30 seconds until the messages stop displaying before continuing.

9. Enter: **<CR>**. The `Router>` prompt appears.

10. Configure the bridge parameters:

    a. Enter: **enable<CR>** at the `Router>` prompt. The prompt changes to `Router#`.

    b. Enter: **config t<CR>** at the `Router#` prompt, the prompt changes to `Router(config)#`.

    c. Enter: **bridge irb<CR>**

    d. Enter: **bridge 1 protocol ieee<CR>**

    e. Enter: **bridge 1 route ip<CR>**

    f. Enter: **int bvi1<CR>** The prompt changes to `Router(config-if)#`.

NOTE

State changes may be noted. When state change messages stop, enter: **<CR>** to continue.

    g. Enter the IP–address command string, dependent on system and/or channel.

       (1) For single channel or Redundant Channel 1
       enter: **ip address 172.25.**===**.7 255.255.255.128<CR>**
       Where === is the site–specific subnet ID (see hosts file).

       (2) For Redundant Channel 2
       enter: **ip address 172.25.**===**.77 255.255.255.128<CR>**
       Where === is the site–specific subnet ID (see host file).

    h. Enter: **exit<CR>** at the `Router(config-if)#` prompt. Prompt changes to `Router(config)#`.

11. Configure the Ethernet port:

    a. Enter: **int fØ/Ø<CR>** The prompt changes to `Router(config-if)#`.

    b. Enter: **bridge-group 1<CR>**

    c. Enter: **no shutdown<CR>** (Wait about 30 seconds for the router to change its status.)

    NOTE

    State changes may be noted. When state change messages stop, enter: **<CR>** to continue.

    d. Enter: **end<CR>**. The prompt changes to `Router#`.

    e. Feedback: `Configured from console by console`.

    f. Enter: **<CR>**

    g. Enter: **write mem<CR>** to save the entries.

    h. Wait a few seconds for the router to update and the `Router#` prompt to return.

    NOTE

    If steps 2.j. through 2.u. were initially skipped, the procedure must now be restarted and completed again beginning with step 2.j.

12. Upload configuration files.

    a. Enter: **copy tftp running-config<CR>** at the `Router#` prompt.

    b. Feedback: `Address or name of remote host []?`

       (1) For single channel or Redundant Channel 1 enter: **172.25.**===**.1<CR>** Where === is the site-specific subnet ID (see hosts file).

       (2) For Redundant Channel 2 enter: **172.25.**===**.71<CR>** Where === is the site-specific subnet ID (see hosts file).

    c. Feedback: `Source filename []?`

    d. Enter: **rtr-template<CR>**

    e. Feedback: `Destination filename [running-config]?`

    f. Enter: **<CR>**

    g. The router proceeds with the upload. Error messages noted for non-installed modules are normal. Also, link state change messages may be noted. When

complete, a `rtr#` prompt appears (may need to enter: **<CR>** to return to a prompt). Prompt would be `rtr1#` for an redundant channel 1 system, or `rtr2#` for redundant channel 2.

h. Enter: **copy tftp running–config<CR>**

i. Feedback: `Address or name of remote host []?`

(1) For single channel or Redundant Channel 1
enter: **172.25.**===**.1<CR>**
Where === is the site–specific subnet ID (see hosts file).

(2) For Redundant Channel 2
enter: **172.25.**===**.71<CR>**
Where === is the site–specific subnet ID (see hosts file).

j. Feedback: `Source filename []?`

k. Enter: **–specific<CR>** or
dod–specific<CR> or
nws–specific<CR> depending on user's agency.

l. Feedback: `Destination filename [running–config]?`

m. Enter: **<CR>**

n. The router proceeds with the upload. Error messages noted for non–installed modules are normal. Also, link state change messages may be noted. When complete, a `rtr#` prompt appears (may need to enter: **<CR>** to return to a prompt). Prompt would be `rtr1#` for an redundant channel 1 system, or `rtr2#` for redundant channel 2.

o. **For non–operational support sites only:** Perform steps p through y, as applicable. **For operational sites, skip to step z.**

p. At the RPG processor, open/select a terminal window on the desktop (other than the tip session window, if using the RPGPCA method for setup).

q. In the new Terminal window, type in **cd /tftpboot<CR>** at the user prompt.

r. In the new Terminal window, type in **ls<CR>** at the user prompt.

s. If the list of files contains a site–specific router template filename (like *xxxx*–specific), where *xxxx* corresponds to the system 4–letter ID assigned to this RPG, note the filename and then proceed with steps t through y. Otherwise, proceed to step 13.

t. In the tip session window enter:
copy tftp running–config<CR>

u. Feedback: `Address or name of remote host [ ]?`

(1) For single channel or FAA Redundant Channel 1 enter:
172.25.===.1<CR>
Where === is the site–specific subnet ID (see hosts file).

(2) For FAA Redundant Channel 2 enter:
172.25.===.71<CR>
Where === is the site–specific subnet ID (see hosts file).

v. Feedback: `Source filename [ ]?`

(1) Enter: ***xxxx–specific*<CR>** where *xxxx–specific* corresponds to thecorresponds to the filename noted in step s above.

w. Feedback: `Destination filename [running-config]?`

x. Enter: **<CR>**

y. The router proceeds with the upload. Error messages noted for non–installed modules are normal. Also, link state change messages may be noted. When complete, a `rtr#` prompt appears (may need to enter: **<CR>** to return to a prompt). Prompt would be `rtr1#` for an FAA redundant channel 1 system, or `rtr2#` for FAA redundant channel 2.

z. **For sites with Frame Relay Hub Router UD75 installed only:** Perform steps aa. through ag.

aa. Enter: **copy tftp running–config<CR>**

ab. Feedback: `Address or name of remote host [xxx]?`
Where: xxx is the IP–address entered in step u.

(1) For single channel or FAA Redundant Channel 1 verify IP–address is correct and press **<CR>,** otherwise enter:
172.25.===.1<CR>
Where === is the site–specific subnet ID (see hosts file).

(2) For FAA Redundant Channel 2 verify IP–address is correct and press **<CR>,** otherwise enter:
172.25.===.71<CR>
Where === is the site–specific subnet ID (see hosts file).

ac. Feedback: `Source filename [rtr-template]?`

ad. Enter: **fr–specific<CR>**

ae. Feedback: `Destination filename [running-config]?`

af. Enter: **<CR>**

ag. The router proceeds with the upload. Error messages noted for non–installed modules are normal. Also, line state change messages may be noted. When

complete, a `rtr#` prompt appears (may need to enter: **<CR> t**o return to a prompt). Prompt would be `rtr1#` for an FAA redundant channel 1 system, or `rtr2#` for FAA redundant channel 2.

13. Make the following entries to setup the site–selected passwords.

NOTE

Throughout step 13., several passwords are assigned for the router's various ports. To make the management of these passwords simpler for the user, using the same *site–selected–password* is suggested.

a. Enter: **config t<CR>**, the prompt changes to `rtr(config)#`

b. Enter: **no enable password<CR>**

c. Enter: **service password–encryption<CR>**

d. Enter: **enable password** *site–selected–password***<CR>**. Make note of the password for future use.

e. Enter: **line vty Ø 4<CR>**

f. Enter: **login<CR>**

g. Enter: **password** *site–selected–password***<CR>**. Make note of the password for future use.

h. Enter: **line con Ø<CR>**

i. Enter: **login<CR>**

j. Enter: **password** *site–selected–password***<CR>**. Make note of the password for future use.

k. Enter: **line aux Ø<CR>**

l. Enter: **login<CR>**

m. Enter: **password** *site–selected–password***<CR>**. Make note of the password for future use.

n. Enter: **exit<CR>**

o. Enter: **no service password–encryption<CR>**

p. Enter: **end<CR>**

q. Feedback: `Configured from console by console.`

r. Enter: **<CR>**

s. Enter: **write mem<CR>** to save the entries.

14. Enter: **exit<CR>** to exit.

15. Enter: **~.** (tilde–dot) to exit the tip session, feedback is `EOT`.

16. This completes the setup procedure.

6.6.6 KVM SWITCH (RARITAN SMX18) UD70A3 SETUP PROCEDURE.

This procedure requires one technician and takes 0.5 hours.

6.6.6.1 Equipment and Tools Required.

1. None

6.6.6.2 Initial Conditions/Preliminary Setup.

1. The KVM Switch is installed in the RPGPCA cabinet in its normal configuration. The KVM Switch is powered On. The RPG and BDDS processors are powered On.

6.6.6.3 Procedure.

1. When powered On, the KVM Switch initiates its self–test. Observe the LCD on the front of the KVM Switch. The circulating message `SMX18: Base SMX18` means the KVM Switch has finished its self–test and is ready to be setup.

2. The Login screen appears on the monitor. Press the **F9** key to make the Login screen reappear if necessary.

3. Using the keyboard, at the user name prompt, enter: **admin<CR>**
   Enter: **raritan<CR>** which is the default password.

4. The `Selection Menu` appears, press the **<F5>** key to bring up the `Administration Menu`.

5. Using the ↓ and ↑ arrow keys at the keyboard, highlight option 1: `System Configuration`.

6. Enter: **<CR>**, the `System Configuration Menu` appears.

7. Use the **<Tab>** key to highlight the Timeout `Off` parameter. When highlighted, the `Off` selection option is yellow.

8. Enter: **<CR>**, to allow changes to the Timeout `Off` option, the `Off` parameter is now highlighted green.

9. Use the ↓ and ↑ arrow keys at the keyboard, to toggle **On** the `Timeout` option.

10. Enter: **<CR>** to have the `Timeout` option accept the `On` option.

11. Use the **<Tab>** key to highlight the `Logout minutes` option. These minutes appear immediately after the word Logout. For new units the default minutes read `05`.

12. Enter: **<CR>**, to allow changes to the `Logout minutes` option, the `05` parameter is now highlighted green.

13. Use the ↓ and ↑ arrow keys at the keyboard, to toggle to **45** minutes, or enter: **45** manually.

14. Enter: **<CR>** to have the `Logout minutes` option accept the `45` minute option.

15. Use the **<Tab>** key to highlight the `Login Blank` option. For new units the default reads `Off`.

16. Enter: **<CR>**, to allow changes to the `Login Blank` option, the `Off` parameter is now highlighted green.

17. Use the ↓ and ↑ arrow keys at the keyboard, to toggle the `Login Blank` option **On**.

18. Enter: **<CR>** to set the `Login Blank` option to `On`. Do not change the default time of `05` minutes.

19. Press the **<ESC>** key and then enter: **Y** to save changes and to return to the `Administration Menu`.

20. Using the ↓ down arrow key at the keyboard, highlight option 3: `Channel Configuration`.

21. Enter: **<CR>**, the `Channel Configuration Menu` appears.

22. Using the ↓ down arrow key at the keyboard, highlight `Channel 01`.

23. Enter: **<CR>**, the highlight bar changes from yellow to green.

24. Enter: **RPG<CR>** to change the name of Channel 01 to `RPG`.

25. Using the ↓ down arrow key at the keyboard, highlight `Channel 02`.

26. Enter: **<CR>**, the highlight bar changes from yellow to green.

27. Enter: **BDDS<CR>** to change the name of Channel 02 to `BDDS`.

28. Using the ↓ down arrow key at the keyboard, highlight `Channel 03`.

29. Enter: **<CR>**, the highlight bar changes from yellow to green.

30. Enter: **KBD Failure<CR>** to change the name of Channel 03 to `KBD Failure`. (This channel is used if the keyboard ever fails, so the RPG and BDDS processors can still be booted and started. Then the RPG and BDDS processors can be controlled remotely by a third processor.)

31. Press the **<F5>** key. Enter: **Y** to save changes and to return to the `Administration Menu`.

32. Using the ↓ down arrow key at the keyboard, highlight option 2: `User Configuration`.

33. Enter: **<CR>**, the `User Configuration Menu` appears.

34. Using the ↓ down arrow key at the keyboard, to highlight the second user (immediately below the admin user).

35. Enter: **<CR>**, the highlight bar changes from yellow to green.

36. Enter: **raritan<CR>** to change the user name to `Raritan`.

37. Press the **<F5>** key. Enter: **Y** to save changes. Configuration is complete.

38. If this setup procedure is being completed as part of the KVM Switch Remove and Replace procedure return to paragraph 6.5.11 to complete installation. Otherwise enter: **<Esc>** to exit and complete the setup procedure.

6.6.7 RPG PROCESSOR ASSEMBLY (SUN ULTRA 10) UD70A7 SETUP PROCEDURE.

This procedure requires one technician and takes 1.0 hours.

6.6.7.1 Equipment and Tools Required.

1. Site mnemonic
2. System Software Distribution CD–ROM Disk.

6.6.7.2 Initial Conditions/Preliminary Setup. Ensure RPG processor UD70A7 is ready to have power turned on. The monitor UD70A4 is turned on. This procedure would normally be used after replacement of the RPG processor or the RPG processor Hard Disk.

6.6.7.3 Procedure.

1. For NWS and DoD sites to access the RPG processor:

   a. Depressing the **<Scroll Lock>** button twice on the keyboard will cause the CDE Login screen or the `Selection Menu` to appear on the monitor.

   b. If a CDE Login screen appears, continue with this step, otherwise continue to step c. Enter **raritan<CR>** for the user (no password). The `Selection Menu` will appear on the monitor.

   c. Under normal conditions, the RPG processor is `Channel 1`, the BDDS processor is `Channel 2`, and KBD Failure is `Channel 3`.

   d. Using the ↓ and ↑ keys on the keyboard highlight the RPG channel. Press **<CR>** to invoke the selection.

2. Power On the RPG processor.

3. When the processor starts to boot, press the **<Stop>** and the **A** keys simultaneously. Feedback is an `ok` prompt.

4. Perform a RPG processor full system software load beginning with step 7 of Table 4–52.

5. Reestablish the RPG processor user accounts by completing Table 4–83.

6. When performing step 4., if a current adaptation floppy was used to restore adaptation data, then proceed to the next step. However, if current adaptation data did not exist but a current backup of Applications software is available on a Jaz disk, then the Applications software can be restored using Table 4–66. This will restore all adaptation data in–place at the time the backup was made.

NOTE

The following two steps are not critical to system operation and can be delayed if critical system operations can not be impacted at this time. Also, the backups specified in the following steps should not be performed until all Applications software, with adaptation data, is in–place as required, and all user accounts are in–place.

7. Complete a backup of the RPG processor Applications software using Table 4–59.

8. Complete a backup of BDDS processor and RPG processor user account directories using Table 4–61 and Table 4–62.

9. If this setup procedure is being completed as part of the Remove and Replace procedure for the RPG processor Hard Disk return to paragraph 6.5.18 to complete the installation. Otherwise this completes the setup procedure.

6.6.8 POWER ADMINISTRATOR (APC MASTERSWITCH) UD70A10 SETUP PROCEDURE.

This procedure requires one technician and takes 1.0 hours.

6.6.8.1 Equipment and Tools Required.

Required items for setup using a laptop computer	Required items for setup using the RPGPCA
Laptop Computer with available DB9 serial port	I/O Panel J7 Port
Windows 95 (or higher) Operating System and HyperTerminal software	APC Serial Cable, # 940–0103
APC Serial Cable, # 940–0103	DB9(M) Gender Changer
Copy of Local processor Hosts File	Serial Cable # EVMBMC–0010, DB9(F)–DB25(M)
	Copy of Local processor Hosts File

6.6.8.2 Initial Conditions/Preliminary Setup.

1. Using the Laptop Computer for setup: The Power Administrator Unit has AC power supplied.

2. Using the RPGPCA for setup: The Power Administrator Unit UD70A10 is installed and in normal operating mode located in the RPGPCA cabinet UD70.

6.6.8.3 Procedure. If using a laptop computer to setup the Power Administrator begin at paragraph 6.6.8.3.1. If using the RPGPCA, skip to paragraph 6.6.8.3.2.

6.6.8.3.1 Power Administrator and Laptop Computer Setup.

1. Disconnect the Router Cable (70/170W254) from the serial port at the front of the Power Administrator.

2. Plug the APC serial cable into the serial port at the front of the Power Administrator.

3. Plug the free end of the serial cable into the serial port of the laptop computer.

4. Power On the laptop (if necessary). Bring up the Windows 95 (or higher) Desktop at the laptop.

NOTE

Some of the HyperTerminal commands and window screens vary from Windows 95/98 and Windows 2000 (or higher). Use step 5.a. for laptops with Windows 95/98 or step 5.b.for laptops with Windows 2000 or higher.

5. Open HyperTerminal connection at the laptop using the appropriate step below:

   a. Laptops with Windows 95/98 Desktop, open HyperTerminal as follows:

      (1) Click **Start ▶ Programs ▶ Accessories ▶ HyperTerminal Folder**

      (2) The `HyperTerminal Folder` is opened as a window.

NOTE

If this procedure has been performed before with this laptop, double–click the **pwradm.ht** icon within the HyperTerminal folder and skip to step 8. otherwise continue with this step.

      (3) Double–click the **Hypertrm.exe** icon to open the program.

      (4) A `Connection Description` window appears. Click in the `Name:` block, then enter: **pwradm<CR>**.

      (5) A `Phone Number` window opens. Change the `Connect Using` block to **Direct to Com 1**. Click **OK** to accept. Proceed to step 6.

b. Laptops with Windows 2000 (or higher) Desktop, open HyperTerminal as follows:

NOTE

If this procedure has been performed before with this laptop, click the **HyperTerminal** with a ▶ , then double–click the **pwradm.ht** icon and skip to step 8., otherwise continue with this step.

(1) Click **Start ▶ Programs ▶ Accessories ▶ Communications ▶ HyperTerminal** (one shown without a ▶ for initial use or the one with a ▶ if this laptop saved a previous pwradm.ht setup)

(2) A `New Connection - HyperTerminal` window appears.

(3) A `Connection Description` window will appear. Click in the `Name:` block, then enter: **pwradm<CR>**

(4) A `Connect To` window opens. Change the `Connect Using` block to **Com 1**. Click **OK** to accept. Proceed to step 6.

6. A `COM1 Properties` window opens. Use the mouse and the scroll bar as necessary to select the following port settings:

a. `Bits per second`: **24ØØ**

b. `Data bits`: **8**

c. `Parity`: **None**

d. `Stop bits`: **1**

e. `Flow control`: **None**

f. Click **OK** to accept.

7. Click **File ▶ Save** for the HyperTerminal file created in steps 5. and 6. This creates an icon in the HyperTerminal Folder for future use. It is called `pwradm.ht`.

8. In the HyperTerminal window, enter: **<CR>** a few times to acquire a `User Name:` prompt in the current HyperTerminal window.

9. Skip to paragraph 6.6.8.3.4 to complete the configuration procedure.

6.6.8.3.2 Primary Power Administrator and RPGPCA Setup.

1. Disconnect the Router Cable (70/170W254) from the serial port at the front of the Power Administrator.

2. Plug the APC Serial Cable, # 940–0103 into the serial port at the front of the Power Administrator.

3. Attach the free end of the APC Serial Cable, # 940–0103 to the gender changer.
4. Attach the free end of the gender changer to the DB9(F)–DB25(M) cable.
5. Plug the free end of the DB9(F)–DB25(M) cable to the I/O Panel J7 Port.
6. For NWS and DoD sites to access the RPG processor:
   a. Depressing the **<Scroll Lock>** button twice on the keyboard will cause the CDE Login screen or the `Selection Menu` to appear on the monitor.
   b. If a CDE Login screen appears, continue with this step, otherwise continue to step c. Enter **raritan<CR>** for the user (no password). The `Selection Menu` will appear on the monitor.
   c. Under normal conditions, the RPG processor is `Channel 1`, the BDDS processor is `Channel 2`, and KBD Failure is `Channel 3`.
   d. Using the ↓ and ↑ keys on the keyboard highlight the RPG channel. Press **<CR>** to invoke the selection.
7. At the RPG processor, if a CDE Login screen is displayed, login as the normal user.
8. At a prompt in the Terminal window, enter: **tip –24ØØ /dev/cua/1<CR>**
9. A `connect` feedback line appears.
10. Enter: **<CR>** a few times to acquire a `User Name:` prompt in the current hyperterminal window. Skip to step 12. if this step cannot be completed successfully.
11. Skip to paragraph 6.6.8.3.4 to complete the configuration procedure.
12. If this connection does not establish correctly, exit the tip session by entering **~.** (tilde–dot). Then establish a connection using the alternate procedure specified in paragraph 6.6.8.3.3.

6.6.8.3.3 Alternate Power Administrator and RPGPCA Setup.

1. Ensure the Power Administrator Unit UD70A10 is installed and in normal operating mode located within the RPGPCA cabinet UD70. Ensure cable assembly 70/170W254 is also connected normally at the front of the Power Administrator.
2. At a prompt in a RPG terminal window,:
   telnet rtr 2129<CR>.
   For an FAA Redundant system, if Channel 2 is/was the Active channel, enter:
   telnet rtr2 2129<CR>.
3. Enter the site–specific RPGPCA Router (UD70/170A2) AUX port password as established by paragraph 6.6.5.3 step 13.m.
4. Enter: **<CR>** to acquire a `User Name:` prompt.

5. Continue to paragraph 6.6.8.3.4 to complete the configuration procedure.

6.6.8.3.4 Power Administrator Configuration Procedure.

1. Using the link created and currently connected through, log into the Power Administrator.

   a. At `User Name:` prompt, enter: **apc<CR>**.

   b. At `Password:` prompt, enter: **apc<CR>**. This supplies the password.

NOTE

If the unit will not allow a login, reset the unit by pressing the reset button on the interface card and then perform step 1. again. If using the RPG processor as a terminal device, resetting the unit may terminate the tip session. If using the RPG terminal method for setup (paragraph 6.6.8.3.2), reenter **tip –24ØØ /dev/cua/1<CR>** at the terminal to reestablish the connection and then perform step 1. again. If using the alternate RPG method, return to paragraph 6.6.8.3.3, step 2.

2. If prompted, enter: **<CR>**, otherwise continue.

3. Configure IP–Addresses for the Power Administrator. Use the hosts file for IP–address references.

   a. At the `Control Console` menu, enter: **2<CR>** to open the `Network` menu.

   b. At the `Network` menu, enter: **1<CR>** for TCP/IP.

   c. Review the TCP/IP menu:

      (1) If the BOOTP status is `disabled`, this procedure has been accomplished before. Skip to step g.

      (2) If the BOOTP status is `enabled`, then the BOOTP must be disabled. Continue to step d.

   d. Enter: **1<CR>** for BOOTP option. The `BOOTP` menu is displayed.

   e. Enter: **1<CR>** to disable the BOOTP.

   f. Enter: **2<CR>** to accept the changes made. This returns the user to the `TCP/IP` menu.

   g. The `TCP/IP` settings and menu are displayed.

   h. Enter: **1<CR>** to bring up a `System IP`: prompt.

   i. Enter the Power Administrator's IP–address as follows:

(1) For single channel and for Channel 1 RPGs: Enter: **172.25.**===**.3<CR>** IAW the hosts file. Where === is the site–specific subnet ID (see hosts file).

(2) For FAA Channel 2: Enter: **172.25.**===**.73<CR>** IAW the hosts file. Where === is the site–specific subnet ID (see hosts file).

j. Enter: **2<CR>** to bring up a `Subnet Mask`: prompt.

k. Enter: **255.255.255.128<CR>**

l. Enter: **3<CR>** to bring up a `Default Gateway`: prompt.

m. Enter the Router–IP–address: **172.25.**===**.7<CR>** IAW the hosts file. Where === is the site–specific subnet ID (see hosts file).

n. Enter: **5<CR>** to accept the changes made to the configuration.

o. Press the **<ESC>** key once to return to the `Network` menu.

p. Enter: **3<CR>** to bring up the `TFTP Client` menu.

q. Enter: **1<CR>** to bring up the `Remote Server IP`: prompt.

r. Enter the RPG processor IP–address as follows:

(1) For single channel and FAA Redundant Channel 1:
Enter: **172.25.**===**.1<CR>** IAW the hosts file. Where === is the site–specific subnet ID (see hosts file).

(2) For FAA Redundant Channel 2:
Enter: **172.25.**===**.71<CR>** IAW the hosts file. Where === is the site–specific subnet ID (see hosts file).

s. Enter: **2<CR>** to accept the change made to the configuration.

4. Press the **<ESC>** key twice to return to the `Control Console` menu.

5. Upload CM image files.

a. At the `Control Console` menu, enter: **3<CR>** to open the `System` menu.

b. At the `System` menu, enter: **4<CR>** to open the `File Transfer` menu.

c. At the `File Transfer` menu, enter: **3<CR>** to initiate a file transfer from a TFTP Client.

d. The program will respond with the prompt:

```
Perform file transfer via TFTP?
Enter 'YES' to continue or <ENTER> to cancel :
```

Enter: **YES<CR>** (must be in upper case letters)

e. The program should respond with the correct RPG processor IP–address as follows:

```
TFTP Server Address,
<ENTER> = "172.25.===.1" or <ENTER> = "172.25.===.71:"
```

Where === is the site–specific subnet.

Enter: **<CR>** to accept the default entry.

NOTE

In the following step, the "Unknown" entry may have a different name if previously configured. If the device has never been configured before, the "Unknown" entry is valid.

f. The program will respond with the prompt:

```
Filename to transfer,
<ENTER> = "Unknown":
```

Enter: **aos.bin<CR>**

g. At the `Press <ENTER> to continue...` prompt, enter: **<CR>**

h. The program will respond with the following:

```
Transferring file...

-------------------------------------------------------

TFTP transfer completed.

Rebooting...
```

i. At this point, the Power Administrator is rebooting. Wait approximately 30 seconds, then enter: **<CR>** a few times to reestablish the console session. Reenter the user name and password IAW paragraph 6.6.8.3.4 and then return to this point to continue the upload of the second image file.

j. At the `Control Console` menu, enter: **3<CR>** to open the `System` menu.

k. At the `System` menu, enter: **4<CR>** to open the `File Transfer` menu.

l. At the `File Transfer` menu, enter: **3<CR>** to initiate a file transfer from a TFTP Client.

m. The program will respond with the prompt:

```
Perform file transfer via TFTP?
```

```
Enter 'YES' to continue or <ENTER> to cancel :
```

Enter: **YES<CR>** (must be in upper case letters)

n. The program should respond with the correct RPG processor IP–address as follows:
```
TFTP Server Address,
<ENTER> = "172.25.===.1" or <ENTER> = "172.25.===.71":
```
Where === is the site–specific subnet. Enter: **<CR>** to accept the default entry.

o. The program will respond with the prompt:

```
Filename to transfer,
<ENTER> = "aos.bin":
```

Enter: **ms.bin<CR>**

p. At the `Press <ENTER> to continue...` prompt, enter: **<CR>**

q. The program will respond with the following:

```
Transferring file...

-------------------------------------------------------

TFTP transfer completed.

Rebooting...
```

r. At this point, the Power Administrator is rebooting. Wait approximately 30 seconds, then enter: **<CR>** a few times to reestablish the console session. Reenter the user name and password IAW paragraph 6.6.8.3.4 and then return to this point to continue the setup procedure.

6. Assign a Name, Device Manager User, and password.

a. Enter: **3<CR>** to bring up the `System` menu.

b. Enter: **2<CR>** for the Identification option.

c. Enter: **1<CR>** for the Name option.

d. Enter: **pwradm<CR>** for a single channel system,
pwradm1<CR> for FAA redundant channel 1, or
pwradm2<CR> for FAA redundant channel 2.

e. Enter: **4<CR>** to accept changes.

f. Enter: **<ESC>** once to return to the `System` menu.

g. Enter: **1<CR>** for the `User Manager` menu.

h. Enter: **2<CR>** for `Device Manager User`.

i. If prompted, enter: **apc<CR>** for the `current Administrator Password` prompt, otherwise continue to next step.

j. Enter the new Device Manager User name.
Enter: **pwradm<CR>** for a single channel system
pwradm1<CR> for FAA redundant channel 1, or
pwradm2<CR> for FAA redundant channel 2.

k. Enter: *site–selected–password***<CR>** for the Device Manager password.

l. Enter: *site–selected–password***<CR>** again to confirm the password.

m. Enter: **<CR>** to skip the authentication phrase entry.

n. Enter: **<CR>** to continue when prompted.

o. Enter: **6<CR>** to accept changes.

p. Enter: **<Esc>** twice to return to the `Control Console` menu.

NOTE

The user that was just established has control privileges but does not have full administration privileges. Only the default user used in step 1.a. above has full administration privileges.

7. Configure the outlets of the Power Administrator.

a. At the `Control Console` Menu, enter: **1<CR>** for the `Device Manager` menu.

b. Enter: **1<CR>** to select `Outlet 1`. (Follow this logic to select the other outlet when needed.)

c. Enter: **2<CR>** to select `Configure Outlet`.

d. Enter: **1<CR>** to edit the `Outlet Name`. Use the following list for the naming conventions of each outlet.

- Outlet 1 RPG
- Outlet 2 LAN
- Outlet 3 Router
- Outlet 4 Comm Server A
- Outlet 5 RDA/RPG Gateway

- Outlet 6 BDDS* *NWS and DoD sites only
- Outlet 7 Comm Server B
- Outlet 8 Comm Server C

e. At the `Outlet Name` prompt, enter the assigned *outlet–name*<**CR**>.

f. Enter: **5<CR>** to accept changes. New feedback reads `success`.

g. Enter: **<Esc>** twice to return to the `Device Manager` Menu.

h. View the display to ensure the outlet just configured is named correctly.

i. Repeat step b. through h. of step 7. for all 8 outlets. When complete continue to next step.

8. Enter: **<Esc>** to return to the `Control Console` menu.

9. Configure SNMP.

a. Enter: **2<CR>** to bring up the `Network` menu.

b. Enter: **8<CR>** to bring up the `SNMP` menu.

c. Enter: **2<CR>** for the `Access Control 1` menu.

d. Enter: **1<CR>** for a `Community` prompt.

e. Enter: **npios<CR>**. Verify that the `Access Type` indicates `Read`.

f. Enter: **4<CR>** to Accept Changes. The Community name for line 1 in the summary table should change to `npios`.

g. Enter: **<Esc>** to return to the `SNMP` menu.

h. Enter: **3<CR>** for the `Access Control 2` menu.

i. Enter: **1<CR>** for a `Community:` prompt.

j. Enter: **npios<CR>**. Verify that the `Access Type` indicates `Write`.

k. Enter: **4<CR>** to Accept Changes. The Community name for line 2 in the summary table should change to `npios`.

l. Enter: **<Esc>** to return to the `SNMP` menu.

m. Enter: **6<CR>** for the `Trap Receiver 1` menu.

n. Enter: **1<CR>** for a `Community Name:` prompt.

o. Enter: **npios<CR>**. Verify that the `Trap Generation` and the `Authentication Traps` entries both indicate `Enabled`.

p. Enter: **4<CR>** for a `Receiver NMS IP:` prompt.

q. Enter the MSCF processor IP–address: **172.25.**===**.2Ø<CR>** from the hosts file. Where === is the site–specific subnet ID (see hosts file).

r. Enter: **5<CR>** to Accept Changes. The Community name for line 1 in the summary table should change to `npios` and the Receiver NMS IP–address should update to the MSCF processor address.

s. Enter: **<Esc>** to return to the `SNMP` menu.

t. Enter: **7<CR>** for the `Trap Receiver 2` menu.

u. Enter: **1<CR>** for a `Community Name:` prompt.

v. Enter: **npios<CR>**. Verify that the `Trap Generation` and the `Authentication Traps` entries both indicate `Enabled`.

w. Enter: **4<CR>** for a `Receiver NMS IP:` prompt.

x. Enter the RPG processor IP–address: **172.25.**===**.1<CR>** from the hosts file. Where === is the site–specific subnet ID (see hosts file).

y. Enter: **5<CR>** to Accept Changes. The Community name for line 1 in the summary table should change to `npios` and the Receiver NMS IP–address should update to the RPG processor address.

z. If this is a Power Administrator at either FAA Redundant channel, continue with step aa. Otherwise for a Single RPG Channel system, skip to step 10.

aa. Enter: **<Esc>** to return to the `SNMP` menu.

ab. Enter: **8<CR>** for the `Trap Receiver 3` menu.

ac. Enter: **1<CR>** for a `Community Name:` prompt.

ad. Enter: **npios<CR>**. Verify that the `Trap Generation` and the `Authentication Traps` entries both indicate `Enabled`.

ae. Enter: **4<CR>** for a `Receiver NMS IP:` prompt.

af. Enter the RPG processor IP–address: **172.25.**===**.71<CR>** from the hosts file. Where === is the site–specific subnet ID (see hosts file).

ag. Enter: **5<CR>** to Accept Changes. The Community name for line 1 in the summary table should change to `npios` and the Receiver NMS IP–address should update to the RPG2 address.

10. Enter: **<Esc>** three times to return to the `Control Console` menu.

11. Enter: **4<CR>** to logout out of the session. Ignore the any follow–on prompts which appears. If using the laptop continue to step 13.

12. If using an RPG tip session to configure the Power Administrator, enter: `~.` (tilde–dot) to exit the tip session. The feedback is `EOT`. If using the alternate telnet session (established via paragraph 6.6.8.3.3), enter: **<Ctrl>]** and then **quit<CR>** at the `telnet>` prompt to exit the telnet session.

13. For NWS and DoD sites to access the RPG processor:

    a. Depressing the **<Scroll Lock>** button twice on the keyboard will cause the CDE Login screen or the `Selection Menu` to appear on the monitor.

    b. If a CDE Login screen appears, continue with this step, otherwise continue to step c. Enter **raritan<CR>** for the user (no password). The `Selection Menu` will appear on the monitor.

    c. Under normal conditions, the RPG processor is `Channel 1`, the BDDS processor is `Channel 2`, and KBD Failure is `Channel 3`.

    d. Using the ↓ and ↑ keys on the keyboard highlight the RPG channel. Press **<CR>** to invoke the selection.

14. Confirm the RPG processor can detect the Power Administrator.

NOTE

This section assumes the Power Administrator is in the RPGPCA cabinet UD70 with an ethernet LAN Switch connection. The user is logged into the CDE Desktop of the RPG processor.

    a. Open a terminal window at the RPG processor, if necessary.

    b. Enter: **ping –s pwradm** for a single channel system,
       ping –s pwradm1<CR> for FAA redundant channel 1, or
       ping –s pwradm2<CR> for FAA redundant channel 2 at the # prompt.

    c. Feedback: `64 bytes from pwradm...`

    d. Once the system is sending back data bits, execute a **<Ctrl> C** to halt the ping execution.

15. If using a laptop to configure the Power Administrator, continue to step 16. If using the RPGPCA skip to step 18.

16. Click on the **X** in the upper–right–hand corner on both open HyperTerminal windows to shut the HyperTerminal session down.

17. Click **yes** to disconnect and **yes** to save the session, if presented with these options.

18. Unplug the cable from the laptop (or I/O Panel J7 port) and Power Administrator Unit that was connected at the beginning of this procedure.

19. Reconnect the Router cable (70/170W254), which was disconnected at the beginning of this procedure, back to the serial port on the front of the Power Administrator.

20. This completes the setup procedure.

6.6.9 UPS ASSEMBLY (APC) UD70A11 SETUP PROCEDURE.

This procedure requires one technician and takes 0.75 hours.

6.6.9.1 Equipment and Tools Required.

Required items for setup using a laptop computer	**Required items for setup using the RPGPCA**
Laptop Computer with available DB9 serial port	I/O Panel J7 Port
Windows 95 (or higher) Operating System and HyperTerminal software	APC Serial Cable, # 940–0024 or # 940–1524
APC Serial Cable, # 940–0024 or # 940–1524	DB9(M) Gender Changer
Copy of Local processor Hosts File	Serial Cable # EVMBMC–0010, DB9(F)–DB25(M)
	Copy of Local processor Hosts File

NOTE

APC Cable 940–0024 may already be in use and connected to the RPG processor UD70A7. Disconnect cable at RPG processor, if necessary, to use for this procedure.

6.6.9.2 Initial Conditions/Preliminary Setup.

1. Using the Laptop Computer for setup: The UPS has AC power supplied

2. Using the RPGPCA for setup: The UPS UD70A11 is installed and in normal operating mode located in the RPGPCA cabinet UD70.

6.6.9.3 Procedure. If using a laptop computer to setup the UPS, begin at paragraph 6.6.9.3.1. If using the RPGPCA, skip to paragraph 6.6.9.3.2.

6.6.9.3.1 UPS and Laptop Computer Setup.

1. Unplug the UPS serial cable (940–0024) from the back of the UPS.

2. Plug APC serial cable into the serial port at the back of the UPS.

3. Plug the free end of the serial cable into the serial port of the laptop computer.

4. Power On the lLaptop (if necessary). Bring up the Windows 95 (or higher) Desktop at the laptop.

NOTE

Some of the HyperTerminal commands and window screens vary from Windows 95/98 and Windows 2000 (or higher). Use step 5.a. for laptops with Windows 95/98 or step 5.b. for laptops with Windows 2000 or higher.

5. Open HyperTerminal connection at the laptop using the appropriate step below:

   a. Laptops with Windows 95/98 Desktop, open HyperTerminal as follows:

      (1) Click **Start ▶ Programs ▶ Accessories ▶ HyperTerminal Folder**

      (2) The `HyperTerminal Folder` is opened as a window.

NOTE

If this procedure has been performed before with this laptop, double–click the **ups.ht** icon within the HyperTerminal folder and skip to step 8., otherwise continue with this step.

      (3) Double–click the **Hypertrm.exe** icon to open the program.

      (4) A `Connection Description` window appears. Click in the `Name:` block, then enter: **ups<CR>**.

      (5) A `Phone Number` window opens. Change the `Connect Using` block to **Direct to Com 1**. Click **OK** to accept. Proceed to step 6.

   b. Laptops with Windows 2000 (or higher) Desktop, open HyperTerminal as follows:

NOTE

If this procedure has been performed before with this laptop, click the **HyperTerminal** with a ▶ , then double–click the **ups.ht** icon and skip to step 8. otherwise continue with this step.

      (1) Click **Start ▶ Programs ▶ Accessories ▶ Communications ▶ HyperTerminal** (one shown within a ▶ for initial use or the one with a ▶ if this laptop saved a previous ups.ht setup).

      (2) A `New Connection - HyperTerminal` window appears.

      (3) A `Connection Description` window will appear. Click in the `Name:` block, then enter: **ups<CR>**.

      (4) A `Connect To` window opens. Change the `Connect Using` block to **Com 1**. Click **OK** to accept. Proceed to step 6.

6. A `COM1 Properties` window opens. Use the mouse and scroll bar as necessary to select the following Port settings:

a. `Bits per second:` **24ØØ**

b. `Data bits:` **8**

c. `Parity:` **None**

d. `Stop bits:` **1**

e. `Flow control:` **None**

f. Click **OK** to accept.

7. Click **File ▶ Save** for the HyperTerminal File created in steps 5.and 6. This creates an icon in the HyperTerminal Folder for future use. The name is `ups.ht`.

8. In the HyperTerminal window, enter: **<CR>** a few times to acquire a `User Name:` prompt in the current HyperTerminal window.

9. Skip to paragraph 6.6.9.3.3 to complete the configuration procedure.

6.6.9.3.2 UPS and RPGPCA Setup.

1. Unplug the UPS serial cable (940–0024) from the back of the UPS.

2. Plug the APC serial cable (# 940–0024 or # 940–1524) into the serial port at the back of the UPS.

3. Attach the gender changer to the free end of the APC serial cable.

4. Attach the free end of the gender changer to the DB9(F)–DB25(M) cable.

5. Plug the free end of the DB9(F)–DB25(M) cable to I/O Panel J7 Port.

6. For NWS and DoD sites to access the RPG processor:

   a. Depressing the **<Scroll Lock>** button twice on the keyboard will cause the CDE Login screen or the `Selection Menu` to appear on the monitor.

   b. If a CDE Login screen appears, continue with this step, otherwise continue to step c. Enter **raritan<CR>** for the user (no password). The `Selection Menu` will appear on the monitor.

   c. Under normal conditions, the RPG processor is `Channel 1`, the BDDS processor is `Channel 2`, and KBD Failure is `Channel 3`.

   d. Using the ↓ and ↑ keys on the keyboard highlight the RPG channel. Press **<CR>** to invoke the selection.

7. At the RPG processor, if a CDE Login screen is displayed, login as the normal user.

8. At a prompt in the terminal window, enter: **tip –24ØØ /dev/cua/1<CR>**

9. A `connect` feedback line appears. Enter: **<CR>** again to finish establishing the connection.

10. Continue to paragraph 6.6.9.3.3 to complete the configuration procedure.

6.6.9.3.3 UPS Configuration Procedure .

1. Using the link created and are currently connected through, open and configure the UPS as follows:

   a. At `User Name:` prompt, enter: **apc<CR>**

   b. At `Password:` prompt, enter: **apc<CR>**

NOTE

If the unit will not allow a login, reset the unit by pressing the reset button on the interface card and then perform step 1.a. and 1.b. again. If using a RPG processor as the terminal device, resetting the unit may terminate the tip session. If so, reenter: **tip –24ØØ /dev/cua/1<CR>** at the terminal to reestablish the connection and then perform step 1.a. and 1.b. again.

   c. A `Control Console` menu is presented.

   d. Enter: **2<CR>** to open the `Network menu`.

   e. Enter: **1<CR>** for `TCP/IP`.

   f. If TCP/IP menu displays the BOOTP as `disabled` then the user can skip to step k. Otherwise continue.

   g. The TCP/IP menu displays the BOOTP as being `enabled`. The BOOTP must be disabled before continuing. Complete step h. through j.

   h. Enter: **1<CR>** for BOOTP: option. The `BOOTP` menu is displayed.

   i. Enter: **1<CR>** to disable the `BOOTP`.

   j. Enter: **2<CR>** to accept the changes made. This returns the user to the `TCP/IP` menu.

   k. The `TCP/IP` settings and menu are displayed.

   l. Enter: **1<CR>**to bring up a `System IP:` prompt.

      (1) For single channel and for Channel 1 RPGs:
      Enter the UPS IP–address: **172.25.**===**.2<CR>** IAW the hosts file.
      Where === is the site–specific subnet ID (see hosts file).

      (2) For FAA Channel 2:
      Enter the Channel 2 UPS IP–address **172.25.**===**.72<CR>** IAW the hosts file. Where === is the site–specific subnet ID (see hosts file).

   m. Enter: **2<CR>** to bring up a `Subnet Mask:` prompt.

n. Enter: **255.255.255.128<CR>**

o. Enter: **3<CR>** to bring up a `Default Gateway:` prompt.

p. Enter the Router IP–address: **172.25.**===**.7<CR>** IAW the hosts file. Where === is the site–specific subnet ID (see hosts file).

q. Enter: **5<CR>** to accept the changes made to the configuration.

2. Enter: **<Esc>** twice to return to the `Control Console` menu.

3. Assign a name and user to the UPS.

a. Enter: **3<CR>** to bring up the `System:` menu.

b. Enter: **2<CR>** for the Identification option.

c. Enter: **1<CR>** for the Name option.

d. Enter: **ups<CR>** for a single channel system,
ups1<CR> for FAA redundant channel 1, or
ups2<CR> for FAA redundant channel 2.

e. Enter: **4<CR>** to accept changes.

f. Enter: **<Esc>** once to return to the `System` menu.

g. Enter: **1<CR>** for the `User Manager` menu.

h. Enter: **2<CR>** for a `Device Manager User:` prompt.

i. If prompted, enter: **apc<CR>** for the `Administrator Password` prompt, otherwise continue to the next step.

j. For the new Device Manager username, enter:
ups<CR> for a single channel system,
ups1<CR> for FAA redundant channel 1, or
ups2<CR> for FAA redundant channel 2.

k. Enter: *site–selected–password***<CR>** for the user password.

l. Enter: *site–selected–password***<CR>** again to confirm the password.

m. Enter: **<CR>** to skip the authentication phrase entry.

n. Enter: **<CR>** to continue when prompted.

o. Enter: **5<CR>** to accept changes.

p. Enter: **<Esc>** twice to return to the `Control Console` menu.

NOTE

The username that was just established has control privileges but does not have full administration privileges. Only the default user used in step 1.a. above has full administration privileges.

4. Configure the UPS Sensitivity and the UPS Wakeup Delay.
   a. Enter: **1<CR>** to bring up the `Device Manager` menu.
   b. Enter: **1<CR>** to bring up the `Smart-UPS 1400 RM` menu.
   c. Enter: **2<CR>** to bring up the `Configuration` menu.
   d. Enter: **2<CR>** to bring up the `Line Transfer` menu.
   e. Enter: **4<CR>** to bring up the `Sensitivity` menu.
   f. Enter: **4<CR>** to select the `Medium` option.
   g. Enter: **5<CR>** to accept changes.
   h. Enter: **<Esc>** once to return to the `Configuration` menu.
   i. Enter: **3<CR>** to bring up the `Shutdown Parameters` menu.
   j. Enter: **2<CR>** to bring up the `Return Delay` menu.
   k. Enter: **3<CR>** to select the `060` seconds option.
   l. Enter: **5<CR>** to accept changes.
   m. Enter: **<Esc>** four times to return to the `Control Console` menu.
5. Configure the SNMP.
   a. Enter: **2<CR>** to bring up the `Network` menu.

NOTE

Should all menu items not show up in subsequent steps, press the reset button on the interface card, log back in (steps 1.a. and 1.b.), and then repeat step 5.a.

   b. Enter: **9<CR>** to bring up the `SNMP` menu.
   c. Enter: **2<CR>** for the `Access Control 1` menu.
   d. Enter: **1<CR>** for a `Community:` prompt.
   e. Enter: **npios<CR>**. Verify that the `Access Type` indicates `Read`.
   f. Enter: **4<CR>** to Accept Changes. The Community name for line 1 in the summary table should change to `npios`.
   g. Enter: **<Esc>** to return to the `SNMP` menu.
   h. Enter: **3<CR>** for the `Access Control 2` menu.
   i. Enter: **1<CR>** for a `Community:` prompt.

j. Enter: **npios<CR>**. Verify that the `Access Type` indicates `Write`.

k. Enter: **4<CR>** to Accept Changes. The Community name for line 2 in the summary table should change to `npios`.

l. Enter: **<Esc>** to return to the `SNMP` menu.

m. Enter: **6<CR>** for the `Trap Receiver 1` menu.

n. Enter: **1<CR>** for a `Community Name:` prompt.

o. Enter: **npios<CR>**.

p. Verify that the `Trap Generation` and the `Authentication Traps` entries both indicate `Enabled`.

q. Enter: **4<CR>** for a `Receiver NMS IP:` prompt.

r. Enter the MSCF processor IP–address: **172.25.**===**.2Ø<CR>** IAW the hosts file. Where === is the site–specific subnet ID (see hosts file).

s. Enter: **5<CR>** to Accept Changes. The Community name for line 1 in the summary table should change to `npios` and the Receiver NMS IP–address should update to the MSCF processor IP–Address.

t. Enter: **<Esc>** to return to the `SNMP` menu.

u. Enter: **7<CR>** for the `Trap Receiver 2` menu.

v. Enter: **1<CR>** for a `Community Name:` prompt.

w. Enter: **npios<CR>**. Verify that the `Trap Generation` and the `Authentication Traps` entries both indicate `Enabled`.

x. Enter: **4<CR>** for a `Receiver NMS IP:` prompt.

y. Enter the RPG processor IP–address: **172.25.**===**.1<CR>** from the hosts file. Where === is the site–specific subnet ID (see hosts file).

z. Enter: **5<CR>** to Accept Changes. The Community name for line 1 in the summary table should change to `npios` and the Receiver NMS IP–address should update to the RPG processor address. If this is an UPS at either FAA Redundant channel, continue with the next step. Otherwise, skip to step ah.

aa. Enter: **<Esc>** to return to the `SNMP` menu.

ab. Enter: **8<CR>** for the `Trap Receiver 3` menu.

ac. Enter: **1<CR>** for a `Community Name:` prompt.

ad. Enter: **npios<CR>**. Verify that the `Trap Generation` and the `Authentication Traps` entries both indicate `Enabled`.

ae. Enter: **4<CR>** for a `Receiver NMS IP:` prompt.

af. Enter the Channel 2 RPG processor IP–address: **172.25.**===**.71<CR>** from the hosts file. Where === is the site–specific subnet ID (see hosts file).===

ag. Enter: **5<CR>** to Accept Changes. The Community name for line 1 in the summary table should change to `npios` and the Receiver NMS IP–address should update to the RPG2 address.

ah. Enter: **<Esc>** three times to return to the `Control Console` menu.

ai. Enter: **4<CR>** to log out of the session. Ignore any follow on messages displayed.

6. If using the RPGPCA to configure the UPS, enter: **~ .** (tilde–dot) to exit the tip session. The feedback is `EOT`. If using a laptop continue to step 7.

7. For NWS and DoD sites to access the RPG processor:

   a. Depressing the **<Scroll Lock>** button twice on the keyboard will cause the CDE Login screen or the `Selection Menu` to appear on the monitor.

   b. If a CDE Login screen appears, continue with this step, otherwise continue to step c. Enter **raritan<CR>** for the user (no password). The `Selection Menu` will appear on the monitor.

   c. Under normal conditions, the RPG processor is `Channel 1`, the BDDS processor is `Channel 2`, and KBD Failure is `Channel 3`.

   d. Using the ↓ and ↑ keys on the keyboard highlight the RPG channel. Press **<CR>** to invoke the selection.

8. Confirm the RPG processor can detect the UPS.

NOTE

This section assumes the UPS is in the RPGPCA cabinet UD70 with an ethernet LAN Switch connection. The user is logged into the CDE desktop for the RPG.

   a. At the RPG processor: Open a `Terminal` Window, if necessary.

   b. Enter: **ping –s ups** for a single channel system,
   ping –s ups1<CR> for FAA redundant channel 1, or
   ping –s ups2<CR> for FAA redundant channel 2 at the # prompt.

   c. Feedback: `64 bytes from ups...`

   d. Once the system is sending back data bits, a **<Ctrl> C** halts the ping execution.

9. If using a laptop to configure the UPS, continue with step 10. If using the RPGPCA then skip to step 12.

10. Click on the **X** in the upper–right–hand corner on both open HyperTerminal windows to shut the HyperTerminal session down.

11. Click **yes** to disconnect and **yes** to save the session, if presented with these options.

12. Unplug the cable from the laptop (or I/O Panel J7 port) and UPS that was connected at the beginning of this procedure.

13. For normal operations reconnect the cable 940–0024 between the UPS serial port and the RPG processor, serial port B (DB9).

14. This completes the setup procedure.

6.6.10 LAN SWITCH (CISCO 2924) UD70A13 SETUP PROCEDURE.

This procedure requires one technician and takes 0.75 hours.

6.6.10.1 Equipment and Tools Required.

1. Copy of Local processor Hosts File.

6.6.10.2 Initial Conditions/Preliminary Setup.

1. The LAN Switch UD70A13 is installed and in normal operating mode located in the RPGPCA cabinet UD70.

2. For NWS and DoD sites to access the RPG processor:

   a. Depressing the **<Scroll Lock>** button twice on the keyboard will cause the CDE Login screen or the `Selection Menu` to appear on the monitor.

   b. If a CDE Login screen appears, continue with this step, otherwise continue to step c. Enter **raritan<CR>** for the user (no password). The `Selection Menu` will appear on the monitor.

   c. Under normal conditions, the RPG processor is `Channel 1`, the BDDS processor is `Channel 2`, and KBD Failure is `Channel 3`.

   d. Using the ↓ and ↑ keys on the keyboard highlight the RPG channel. Press **<CR>** to invoke the selection.

3. At the RPG processor, if a CDE Login screen is displayed, login as the normal user.

4. At a prompt in the terminal window, enter: **tip –96ØØ /dev/cua/5<CR>**

5. A `connect` feedback line appears. Enter: **<CR>** again to finish establishing the connection. A prompt should appear.

6. Continue to paragraph 6.6.10.3 to complete the configuration procedure.

6.6.10.3 LAN Switch Configuration Procedure.

NOTE

For simplicity with this procedure the possible *hostname* (**lan**, **lan1**, or **lan2**) is referred to as `lan` for the remainder of this procedure. When an entry requires the LAN Switch *hostname*, the user needs to enter the appropriate hostname as directed by the procedure.

NOTE

For an initial configuration, the default `Switch>` prompt appears. The `hostname>` is the prompt if this is not an initial configuration of the LAN Switch.

1. This step uploads a default Initial Operating System (IOS) into the LAN Switch. If this LAN Switch is being reconfigured (not an initial configuration), continue with this step. Otherwise skip to step 4. However, if this step is skipped at this time, it is required that the procedure be restarted from step 1.g. after the initial configuration parameters are entered (steps 4. through step 8.)

   a. Enter: *site–selected–password***<CR>**. If this is a new box that may have been previously tested by NRC, it will either have no password set for the CONSOLE port or will use a default password of **cisco**.

   b. At the `lan>` prompt enter: **enable<CR>**

   c. Enter: *site–selected–password***<CR>**. If this is a new box that may have been previously tested by NRC, it will either have no password set for the "enable" level or will use a default password of **cisco**.

   d. At the lan# prompt, enter: **write erase <CR>**

   e. Feedback: `[OK]`

NOTE

Cycling power to the LAN Switch can be accomplished by two means, manually or by keyboard command. If manually removing the power by unplugging the power cord at the rear of the LAN Switch, then plugging it back in, then the tip session will have to be reestablished per paragraph 6.6.10.2, steps 4. and 5. In the following step, the keyboard command is used.

   f. Cycle power to the LAN Switch by performing the following steps:

      (1) At the `lan#` prompt, enter: **reload<CR>**

      (2) At the `[confirm]` prompt, enter: **<CR>**

   After the LAN Switch boots, proceed to step 6. After completion of step 6. through step 8., this procedure will be restarted beginning with step 1.g.

g. Enter: **format flash:<CR>**

h. Feedback: `Format operation may take a while Continue? [confirm]`

i. Enter: **<CR>**

j. Feedback: `Format operation will destroy all data in "flash" Continue? [confirm]`

k. Enter: **<CR>**. No immediate feedback will be noted. Data will be destroyed (approximately 45 seconds).

l. Feedback: `Format of flash: complete`. A `switch#` prompt will return.

CAUTION

Upon completion of steps g. through l., if power is removed without successful completion of steps m. through w. the firmware within the LAN Switch will become corrupted (signified by a `switch:` prompt) and a new LAN Switch must be ordered. Ensure the tar file loads (step t.) and is correctly extracted (step v.).

m. Enter the following file upload string, dependent on system and/or channel.

(1) For single channel or FAA Redundant Channel 1 enter:
copy tftp://172.25.===.1/c29ØØ.tar flash:<CR>
Where === is the site–specific subnet ID (see hosts file).

(2) For FAA Redundant Channel 2 enter:
copy tftp://172.25.===.71/c29ØØ.tar flash:<CR>
Where === is the site–specific subnet ID (see hosts file).

NOTE

Steps 1.n. through 1.q. will not be necessary unless this LAN Switch is presently using an old IOS. If not prompted for Source IP–address or Source filename, proceed to step 1.r.

n. Feedback: `Source IP address or hostname []?`

o. Enter the RPG processor IP–address:
172.25.===.1<CR> (single channel or FAA Redundant Channel 1) or,
172.25.===.71<CR> (FAA Redundant Channel 2)
where === is the site–specific subnet number.
Enter the correct subnet using the hosts file.

p. Feedback: `Source filename [c2900.tar]?`

q. Enter: **<CR>**

r. Feedback: `Destination filename [c2900.tar]?`

s. Enter: **<CR>**

t. Wait while c2900.tar is loaded (approximately 1 minute). A `switch#` prompt will return.

u. Enter: **tar /xtract flash:c29ØØ.tar flash:<CR>**

v. No immediate feedback is noted, after about 45 seconds, file names will scroll by as the files are extracted. Wait is approximately 1 1/2 minutes.

w. The `switch#` prompt returns.

x. Cycle power to the LAN Switch by performing the following steps:

(1) At the `switch#` prompt, enter: **reload <CR>**

(2) At the `[confirm]` prompt, enter: **<CR>**

2. Once the LAN Switch powers on, it reloads the default software (approximate 1 minute wait). When complete, the feedback states: `C2900XL INIT: Complete`; however, five or six more lines may be noted following this feedback line.

NOTE

Throughout this procedure, the LAN Switch state is changed and a feedback message is presented while the user is trying to complete entries. To return to an entry prompt, press **<CR>**

3. Enter: **<CR>**

4. Feedback: `Continue with configuration dialog? [yes/no]:`.

5. Enter: **n<CR>**

6. Feedback: `Press RETURN to get started:`.

7. Enter: **<CR>**. `Switch>` prompt appears.

8. Configure the IP–address/netmask:

a. Enter: **enable<CR>** at the `Switch>` prompt. The prompt changes to `Switch#`.

b. Enter: **config t<CR>** at the `Switch#` prompt, the prompt changes to `Switch(config)#`.

c. Enter: **int vlan1<CR>**, the prompt changes to `Switch(config-if)#`.

d. Enter the IP–address string, dependent on system and/or channel.

(1) For single channel or FAA Redundant Channel 1 enter:
ip address 172.25.===.6 255.255.255.128<CR>
Where === is the site–specific subnet ID (see hosts file).

(2) For FAA Redundant Channel 2 enter:
ip address 172.25.===.76 255.255.255.128<CR>.
Where === is the site–specific subnet ID (see hosts file).

e. Enter: **end<CR>** at the `Switch(config-if)#` prompt. Prompt changes to `Switch#` (may need to enter: **<CR>** to return to the prompt).

f. Feedback: `Configured from console by console`.

g. Enter: **<CR>**

h. Enter: **write mem<CR>** to save the entries.

i. Wait a few seconds for the switch to update and the `Switch#` prompt to return (may need to enter: **<CR>** to return to the prompt).

NOTE

If steps 1.g. through 1.x. were initially skipped, the procedure must now be restarted and completed again beginning with step 1.g. of paragraph 6.6.10.3.

9. Upload configuration files.

a. Enter: **copy tftp running–config<CR>** at the `Switch#` prompt.

b. Feedback: `Source IP Address or hostname []?`

(1) For single channel or FAA Redundant Channel 1 enter: **172.25.===.1<CR>**
Where === is the site–specific subnet ID (see hosts file).

(2) For FAA Redundant Channel 2 enter: **172.25.===.71<CR>**
Where === is the site–specific subnet ID (see hosts file).

c. Feedback: `Source filename []?`

d. Enter: **lan–template<CR>**

e. Feedback: `Destination filename [running-config]?`

f. Enter: **<CR>**

NOTE

If a "... (Timed out)" type message is observed, the file did not upload correctly. Repeat steps a. through f.

g. The LAN Switch proceeds with the upload (approximate wait is 30 seconds). Link state change messages may be noted.

h. When complete, a `lan#` prompt appears (may need to enter: **<CR>** to return to the prompt).

i. Enter: **copy tftp running–config<CR>**

j. Feedback: `Source IP Address or hostname []?`

(1) For single channel or FAA Redundant Channel 1
enter: **172.25.**===**.1<CR>**
Where === is the site–specific subnet ID (see hosts file).

(2) For FAA Redundant Channel 2
enter: **172.25.**===**.71<CR>**
Where === is the site–specific subnet ID (see hosts file).

k. Feedback: `Source filename []?`

l. Enter: **faa–lan–specific<CR>** or
dod–lan–specific<CR> or
nws–lan–specific<CR> depending on user's agency.

m. Feedback: `Destination filename [running-config]?`

n. Enter: **<CR>**

NOTE

If a "... (Timed out)" type message is observed, the file did not upload correctly. Repeat steps i. through n.

o. The LAN Switch proceeds with the upload (approximate wait is 30 seconds). Link state change messages may be noted. When complete, a `lan#` prompt appears (may need to enter: **<CR>** to return to the prompt). Prompt would be `lan1#` for an FAA redundant channel 1 system, or `lan2#` for FAA redundant channel 2.

p. **For non–operational support sites only:** Perform steps q. through z., as applicable.

q. At the RPG processor, open/select a terminal window on the desktop (other than the tip session window, if using the RPGPCA method for setup).

r. In the new terminal window, type in **cd /tftpboot<CR>** at the user prompt.

s. In the new terminal window, type in **ls<CR>** at the user prompt.

t. If the list of files contains a site–specific router template filename (like *xxxx*–specific), where *xxxx* corresponds to the system 4–letter ID assigned to

this RPG, note the filename and then proceed with steps u. through z. Otherwise, proceed to step 13.

u. In the tip session window at the Switch# prompt, enter:
copy tftp running–config<CR>

v. Feedback: `Source IP Address or hostname [ ]?`

(1) For single channel or FAA Redundant Channel 1 enter:
172.25.===.1<CR>
Where === is the site–specific subnet ID (see hosts file).

(2) For FAA Redundant Channel 2 enter:
172.25.===.71<CR>
Where === is the site–specific subnet ID (see hosts file).

w. Feedback: `Source filename [ ]?`

(1) Enter: ***xxxx–lan–specific*<CR>** where *xxxx–lan–specific* corresponds to filename noted in step t above.

x. Feedback: `Destination filename [running-config]?`

y. Enter: **<CR>**

NOTE

If a "`... (Timed out)`" type message is observed, the file did not upload correctly. Repeat steps q. through y.

z. The LAN Switch proceeds with the upload (approximate wait is 30 seconds). Link state change messages may be noted. When complete, a `lan#` prompt appears (may need to enter: **<CR>** to return to the prompt). Prompt would be `lan1#` for an FAA redundant channel 1 system, or `lan2#` for FAA redundant channel 2.

10. Make the following entries to setup the site–specific passwords.

a. Enter: **config t<CR>**, the prompt changes to `lan(config)#`

b. Enter: **no enable password<CR>**

c. Enter: **no enable secret<CR>**

d. Enter: **enable password** *site–selected–password*<**CR>**
Make note of the password for future use.

e. Enter: **no username** *hostname***<CR>**
Where *hostname* is **lan** for a single channel system, **lan1** for an FAA redundant channel 1 system, or **lan2** for FAA redundant channel 2.

f. Enter:
username *hostname* **password ø** *site–selected–password***<CR>**.

Where *hostname* is **lan** for a single channel system, **lan1** for an FAA redundant channel 1 system, or **lan2** for FAA redundant channel 2.

g. Enter: **line vty Ø 4<CR>**

h. Enter: **login<CR>**

i. Enter: **password** *site–selected–password***<CR>**
Make note of the password for future use.

j. Enter: **line con Ø<CR>**

k. Enter: **login<CR>**

l. Enter: **password** *site–selected–password***<CR>**
Make note of the password for future use.

m. Enter: **end<CR>**

n. Feedback: `Configured from console by console`.

o. Enter: **<CR>**

p. Enter: **write mem<CR>** to save the entries.

11. Enter: **exit<CR>** to exit.

12. Enter: **~.** (tilde–dot) to exit the tip session, feedback is `EOT`.

13. This completes the setup procedure.

6.6.11 X.25 DIAL–IN MODEM (CODEX 3262) – 14400/SYNC SETUP PROCEDURE. APPLIES TO UD70/170A14A1 – A3A.

See Figure 6–21.

This procedure requires one technician and takes 0.5 hours.

6.6.11.1 Equipment and Tools Required.

1. None

6.6.11.2 Initial Conditions/Preliminary Setup. Ensure the system is in normal operating mode. Verify modem card DIP switches are set correctly IAW Figure 6–21. At the front panel buttons (shown as they appear when facing the rack [i.e., rotated 90 degrees clockwise from the stand alone version]), perform the following functions:

Return button – when pressed within a branch of the menu, changes the LCD to the branch title screen (e.g., `TERMINAL OPT'S)`. When pressed at a branch title screen, changes the LCD to the home screen (e.g., `DATA 14.4 T/D?)`.

Down button – moves from branch to branch from the main menu and selects individual setting options within the branches.

Across button – moves the screen along the branches of the modem menu tree. It also moves the cursor across data entry menus one character (or digit) at a time (e.g., S–Reg menus).

Enter button – selects the item displayed on the LCD as the current setting (if the screen displayed an = sign, it was already the current setting), or initiates an action (as in Reinit Memory?).

The Codex 3262 Dial Port Modem contains two independently functioning dial modems on a single card. The A/B indicator at the front panel is illuminated when modem A information is displayed. When the indicator is Off, modem B front panel information is displayed. To toggle between modem A and modem B front panels, hold the (**RETURN**) key button and then press the (**ENTER**) buttonkey. If both modems are utilized, paragraph 6.6.11.3 must be repeated for the second modem.

NOTE

Due to differences in modem models, some default display readings will vary between sites. Operators should carefully note desired modem settings and follow data input sequences until these settings are accomplished. (Example 1: While some systems default to a DTE Rate of 14.4, others default to 33.6. In the event the system defaults to 33.6, and the desired reading is 14.4, follow the button sequence until the display reading is 14.4. Example 2: While following procedures for the S–Reg reading, the system may begin with S–Reg = 030 or it may default to some other reading. If the desired reading is S–Reg = 180, perform the button sequence until this reading is achieved.)

6.6.11.3 Procedure.

1. Press the **<RETURN>** button twice (ensures beginning from the home screen).
2. Press the **<ACROSS>** button until the display reads `Reinit Memory?`
3. Press the **<ENTER>** button once. The display reads `Reinit All Mem?`
4. Press the **<ENTER>** button again. The display reads `3262 Initial`
5. Press the **<RETURN>** button. The display reads `Disconnect T/D?`
6. Press the **<ACROSS>** button until the display reads `Select Options=1`
7. Press the **<DOWN>** button until the display reads `Select Options:3`

8. Press the **<ENTER>** button. The display reads `Select Complete!`
9. Press the **<ACROSS>** button until the display reads `Power Up In=Old`
10. Press the **<DOWN>** button until the display reads `Power Up In:3`
11. Press the **<ENTER>** button. The display reads `Power Up In=3`
12. Press the **<ACROSS>** button until the display reads `S-Reg 000=000`
13. Press the **<DOWN>** button until the display reads `S-Reg 007=030`
14. Press the **<ENTER>** button. The display reads `S-Reg 007:030` **(Blinking cursor over the first 0 in 030)**
15. Press the **<DOWN>** button until the display reads `S-Reg 007:130`
16. Press the **<ACROSS>** button until the display reads `S-Reg 007:130` **(Blinking cursor over 3 in 130)**
17. Press the **<DOWN>** button until the display reads `S-Reg 007:180`
18. Press the **<ENTER>** button. The display reads `S-Reg 007=180`
19. Press the **<RETURN>** button. The display reads `Disconnect  T/D?`
20. Press the **<DOWN>** button until the display reads `MODULATION OPT'S`
21. Press the **<ACROSS>** button until the display reads `Max Rate=14.4 or Max Rate=33.6`
22. Press the **<DOWN>** button until the display reads `Max Rate:14.4`
23. Press the **<ENTER>** button. The display reads `Max Rate=14.4`
24. Press the **<ACROSS>** button. The display reads `Min Rate=300`
25. Press the **<DOWN>** button until the display reads `Min Rate:4800`
26. Press the **<ENTER>** button. The display reads `Min Rate=4800`
27. Press the **<ACROSS>** button until the display reads `Mode=Originate`
28. Press the **<DOWN>** button. The display reads `Mode:Answer`
29. Press the **<ENTER>** button. The display reads `Mode=Answer`
30. Press the **<ACROSS>** button. The display reads `Clock=Internal`
31. Press the **<DOWN>** button. The display reads `Clock:Loopback`
32. Press the **<ENTER>** button. The display reads `Clock=Loopback`
33. Press the **<RETURN>** button. The display reads `MODULATION OPT'S`

34. Press the **<DOWN>** button. The display reads `ACU OPT'S`
35. Press the **<ACROSS>** button until the display reads `Answer=Manual`
36. Press the **<DOWN>** button until the display reads `Answer:Ring #2`
37. Press the **<ENTER>** button. The display reads `Answer=Ring #2`
38. Press the **<RETURN>** button. The display reads `ACU OPT'S`
39. Press the **<DOWN>** button. The display reads `TERMINAL OPT'S`
40. Press the **<ACROSS>** button. The display reads
    `DTE Rate=14.4 or DTE Rate=28.8`
41. Press the **<DOWN>** button until the display reads `DTE Rate:14.4`
42. Press the **<ENTER>** button. The display reads `DTE Rate=14.4`
43. Press the **<ACROSS>** button. The display reads `Flow=XON/XOFF`
44. Press the **<DOWN>** button until the display reads `Flow:RTS/CTS`
45. Press the **<ENTER>** button. The display reads `Flow=RTS/CTS`
46. Press the **<ACROSS>** button until the display reads `DCD Loss Dis=S10`
47. Press the **<DOWN>** button until the display reads `DCD Loss Dis:7 s`
48. Press the **<ENTER>** button. The display reads `DCD Loss Dis=7 s`
49. Press the **<ACROSS>** button until the display reads `Inactivity=S30`
50. Press the **<DOWN>** button until the display reads `Inactivity:3min`
51. Press the **<ENTER>** button. The display reads `Inactivity=3min`
52. Press the **<RETURN>** button. The display reads `TERMINAL OPT'S`

NOTE

Steps 53. through 57. should **only** be performed at sites with "programmable" vs. "permissive" telephone jacks, this may include sites that have their systems connected to PBXs. This setting affects the output power level of the modem on the phone line. Setting RJ11C on a "programmable" line will result in too much power being output on the phone line, and most likely, complaints from the local telephone company. With a PBX connection, the normal output level of –9 dBm may be too "hot". Most of the systems in the WSR–88D program have the "permissive" system, and should be set to RJ11C. This information is provided for those sites that are exceptions. For sites with PBXs, if the modem is connected to a PBX rather thansites with PBXs, if the modem is connected to a PBX rather than a direct outside line and connection problems are being experienced at the site, RJ45S may be a better setting. There is no other option for these modems that affects output dial line power level.

53. Press the **<DOWN>** button. The display reads `TELCO OPT'S`
54. Press the **<ACROSS>** button. The display reads `Telco=RJ11C`
55. Press the **<DOWN>** button. The display reads `Telco:RJ45S`
56. Press the **<ENTER>** button. The display reads `Telco=RJ45S`
57. Press the **<RETURN>** button. The display reads `TELCO OPT'S`
58. Press the **<DOWN>** button. The display reads `DIALING OPT'S`
59. Press the **<ACROSS>** button until the display reads `Dial=Tone`
60. Press the **<DOWN>** button until the display reads `Dial:Auto`
61. Press the **<ENTER>** button. The display reads `Dial=Auto`
62. Press the **<ACROSS>** button until the display reads `Call Timeout=60`
63. Press the **<DOWN>** button until the display reads `Call Timeout:S7`
64. Press the **<ENTER>** button. The display reads `Call Timeout=S7`
65. Press the **<RETURN>** button twice. The display reads `Disconnect T/D?`
66. Press the **<ACROSS>** button until the display reads `Save Changes=3`
67. Press the **<ENTER>** button, and wait until the display reads `Save Completed!`

68. Press the **<RETURN>** button twice. The display reads `Disconnect T/D?`

Menu Listing.

On the next two pages are the settings listed by branch option menu. The experienced technician may find this quicker to use than the preceding procedure. The listing may also be used as a quick reference for verifying that the modems are set up correctly. All settings that are changed from the default values for Option Set 3 are underlined.

NOTE

An item marked with an asterisk (*) may not appear on an individual modem due to differences in firmware revision level.

TEST OPTIONS

Test = End Test (unless test is running)
Accept RDL=On
LAL Busy Out=Off

MODULATION OPTIONS

Line=Dial
Mod=V32bis Auto
Auto Type=CCITT
Low Speed=Bell
Max Rate=14.4
Min Rate=4800
Fast Call =Off
AdaptiveRate=On
Mode=Answer
Clock = Loopback
Retrain=High BER
Longspace = Off
PSTN = On
Guard Tone=Off

RESTORAL OPTIONS

HoldDialine=Off

EC/DC OPTIONS

Mode=Direct

ACU OPTIONS

ACU Select=V25b
AT Form=Async
V25Form=Bitsync
NoACU Form=Sync
Default Dial=Off
Answer=Ring #2
Async Echo=On
Char Length = 10
V25 Char=ASCII
Sync Idle = Char
V25Resp=V25bis
Parity=V.25 bis
AT Msg=Before CD
RsltCode=Enable
RsltForm=Verbose
Con Msg=DTE Rate *
Rel Msg=Off
LPDA2 Addr=FF
LPDA2 ID = 326x
LPDA2 Det=Enab
Call Progress=4

FP SECURITY OPTIONS

Enter Password?
Password=Disable

Buffers=Regular *
EC = V.42
DC = Enabled
Break=Destruct
Modem Flow=On
Delay=Off
EC ID=Default

TERMINAL OPTIONS

DTE Rate = 14.4
Flow=RTS/CTS
Speed Conver=On
DTR = 108.2
RTS = Normal
CTS = Normal
RtsCts Delay=0
DCD=Normal
RemRTS/DCD=Codex
DCD Loss Dis=7 s
DSR=Normal
Overspeed = 1%
DTR Delay=S25
DTE Ct 140=Off
DTE Ct 141=Off
Ext Select=Off
Ext Cntrl=Pin 14
Inactivity=3min

TELCO OPTIONS

Telco=RJ11C/RJ45S (see text)
LL Tx Level=0 to –15 (see text)
Line Compen=Off *
Speaker=Dialing
Volume=Medium
Netwrk Comp=Off *

Set protection?
Change Password?

ACCESS SECURITY OPTIONS

PW Verify=Dis
Callback=Off
Rmt Num Rqrd=Off
Enter Group PW?
Group PW=Disable
Tone=None
Sim Ring=Disable
DialRstrct=Off

NETWORK CONTROL OPTIONS

OverrideMode=Off
NC Address=000
NC PortRate=75
Pass Thru=Opt 1

REMOTE CONFIGURATION OPTIONS

Init Rmt Cnfg?
Rmt Acc=Enable

SET RMT LL ADDRESS

New Address=000
Rmt Ser#=000000
RmtNest Modem=No
’Enter’ To Set

SEARCH RMT LL ADDRESS

Rmt Ser#=000000
RmtNest Modem=No
’Enter’ To Srch

DIALING OPTIONS

Pause Delay=3

Dial Wait = 2

Dial=Auto

Call Timeout=S7

Blind Dial = S6

Pulse Cycle=40%

Tone Length=72

6.6.12 TCP OPUP DIAL–IN MODEM (CODEX 3262) – PPP 14400/ASYNC SETUP PROCEDURE. APPLIES TO UD70/170A3B – A4B.

NOTE

This procedure applies to **PPP modems only**.

See Figure 6–21.

This procedure requires one technician and takes 0.5 hours.

6.6.12.1 Equipment and Tools Required.

1. None

6.6.12.2 Initial Conditions/Preliminary Setup. Ensure the system is in normal operating mode. Verify modem card DIP switches are set correctly IAW Figure 6–21. At the front panel buttons (shown as they appear when facing the modem [i.e., rotated 90 degrees clockwise from the stand alone version]), perform the following functions:

Return button – when pressed within a branch of the menu, moves the LCD screen to the branch title screen (e.g., **TERMINAL OPT'S**`TERMINAL OPT'S`). When pressed at a branch title screen, moves the LCD display to the main screen (e.g., **DATA 14.4 T/D?** or **V32b 14.4 T/D?**`DATA 14.4 T/D?` or `V32b 14.4 T/D?`).

Down button – moves from branch to branch from the main menu and selects individual setting options within the branches.

Across button – moves the screen along the branches of the modem menu tree. It also moves the cursor across data entry menus one character (or digit) at a time (e.g., S–Reg menus).

Enter button – selects the item displayed on the LCD screen as the current setting (if the screen displayed an = sign, it was already the current setting), or initiates an action (as in Reinit Memory?).

The Codex 3262 Dial Port Modem contains two independently functioning dial modems on a single card. The A/B indicator on the front panel is illuminated when modem A information is displayed. When the indicator is Off, modem B front panel information is displayed. To toggle between modem A and modem B front panels, hold the **<RETURN>** button and then press the **<ENTER>** button. If both modems are utilized, paragraph 6.6.12.3 should be performed on the B modem.

NOTE

Due to differences in modem models, some default display readings will vary between sites. Operators should carefully note desired modem settings and follow data input sequences until these settings are accomplished. (Example 1: While some modems default to a DTE Rate setting of 14.4, others default to 33.6. In the event the modem defaults to 33.6, and the desired reading is 14.4, follow button sequences until the display reading is 14.4. Example 2: While following procedures for the S–Reg setting, the modem may begin with S–Reg = 130, or it may default to some other reading. If the desired reading is S–Reg = 180, perform the button sequence until this reading is achieved.)

6.6.12.3 Procedure.

1. Press the **<RETURN>** button twice (ensures beginning from the home screen).
2. Press the **<ACROSS>** button until the display reads `Reinit Memory?`
3. Press the **<ENTER>** button once. The display reads `Reinit All Mem?`
4. Press the **<ENTER>** button again. The display reads `3262 Initial`
5. Press the **<RETURN>** button. The display reads `Disconnect  T/D?`
6. Press the **<ACROSS>** button until the display reads `Power Up In=Old`
7. Press the **<DOWN>** button until the display reads `Power Up In:1`
8. Press the **<ENTER>** button. The display reads `Power Up In=1`
9. Press the **<ACROSS>** button until the display reads `S–Reg 000=000`
10. Press the **<DOWN>** button until the display reads `S–Reg 007=030`
11. Press the **<ENTER>** button. The display reads `S–Reg 007:030` **(Blinking cursor over the first 0 in 030)**
12. Press the **<DOWN>** button until the display reads `S–Reg 007:130`
13. Press the **<ACROSS>** button until the display reads `S–Reg 007:130` **(Blinking cursor over 3 in 130)**

14. Press the **<DOWN>** button until the display reads `S-Reg 007:180`
15. Press the **<ENTER>** button. The display reads `S-Reg 007=180`
16. Press the **<RETURN>** button. The display reads `Disconnect  T/D?`
17. Press the **<DOWN>** button until the display reads `MODULATION OPT'S`
18. Press the **<ACROSS>** button until the display reads `Min Rate=300`
19. Press the **<DOWN>** button until the display reads `Min Rate:4800`
20. Press the **<ENTER>** button. The display reads `Min Rate=4800`
21. Press the **<ACROSS>** button until the display reads `Mode=Originate`
22. Press the **<DOWN>** button. The display reads `Mode:Answer`
23. Press the **<ENTER>** button. The display reads `Mode=Answer`
24. Press the **<RETURN>** button. The display reads `MODULATION OPT'S`
25. Press the **<DOWN>** button until the display reads `EC/DC OPT'S`
26. Press the **<ACROSS>** button. The display reads `Modem Flow=On`
27. Press the **<DOWN>** button until the display reads `Modem Flow:Off`
28. Press the **<ENTER>** button. The display reads `Modem Flow=Off`
29. Press the **<RETURN>** button. The display reads `EC/DC OPT'S`
30. Press the **<DOWN>** button until the display reads `ACU OPT'S`
31. Press the **<ACROSS>** button. The display reads `Answer=Using S0`
32. Press the **<DOWN>** button until the display reads `Answer:Ring #2`
33. Press the **<ENTER>** button. The display reads `Answer=Ring #2`
34. Press the **<RETURN>** button. The display reads `ACU OPT'S`
35. Press the **<DOWN>** button until the display reads `TERMINAL OPT'S`
36. Press the **<ACROSS>** button. The display reads `DTE Rate=Auto`
37. Press the **<DOWN>** button until the display reads `DTE Rate:38.4`
38. Press the **<ENTER>** button. The display reads `DTE Rate=38.4`
39. Press the **<ACROSS>** button until the display reads `Flow=XON/XOFF`
40. Press the **<DOWN>** button until the display reads `Flow:RTS/CTS`
41. Press the **<ENTER>** button. The display reads `Flow=RTS/CTS`

42. Press the **<ACROSS>** button until the display reads `DTR=High`
43. Press the **<DOWN>** button until the display reads `DTR:108.2`
44. Press the **<ENTER>** button. The display reads `DTR=108.2`
45. Press the **<ACROSS>** button until the display reads `RTS=High`
46. Press the **<DOWN>** button until the display reads `RTS:Normal`
47. Press the **<ENTER>** button. The display reads `RTS=Normal`
48. Press the **<ACROSS>** button until the display reads `CTS=AsyncSync`
49. Press the **<DOWN>** button until the display reads `CTS:Normal`
50. Press the **<ENTER>** button. The display reads `CTS=Normal`
51. Press the **<ACROSS>** button until the display reads `DCD=High`
52. Press the **<DOWN>** button. The display reads `DCD:Normal`
53. Press the **<ENTER>** button. The display reads `DCD=Normal`
54. Press the **<ACROSS>** button until the display reads `DCD Loss Dis=S10`
55. Press the **<DOWN>** button. The display reads `DCD Loss Dis:7s`
56. Press the **<ENTER>** button. The display reads `DCD Loss Dis=7s`
57. Press the **<ACROSS>** button until the display reads `DSR=High`
58. Press the **<DOWN>** button. The display reads `DSR:Normal`
59. Press the **<ENTER>** button. The display reads `DSR=Normal`
60. Press the **<ACROSS>** button until the display reads `Inactivity=S30`
61. Press the **<DOWN>** button. The display reads `Inactivity:3min`
62. Press the **<ENTER>** button. The display reads `Inactivity=3min`
63. Press the **<RETURN>** button. The display reads `TERMINAL OPT'S`

NOTE

Steps 64. through 68. should **only** be performed at sites with "programmable" vs. "permissive" telephone jacks; this may include sites that have their systems connected to PBXs. This setting affects the output power level of the modem on the phone line. Setting RJ11C on a "programmable" line will result in too much power being output on the phone line, and most likely, complaints from the local telephone company. With a PBX connection, the normal output level of –9 dBm may be too "hot". Most of the systems in the WSR–88D program have the "permissive" system, and should be set to RJ11C. This information is provided for those sites that are exceptions. For sites with PBXs, if the modem is connected to a PBX rather thansites with PBXs, if the modem is connected to a PBX rather than a direct outside line, and connection problems are being experienced at the site, RJ45S may be a better setting. There is no other option for these modems that affects output dial line power level.

64. Press the **<DOWN>** button. The display reads `TELCO OPT'S`
65. Press the **<ACROSS>** button. The display reads `Telco=RJ11C`
66. Press the **<DOWN>** button. The display reads `Telco:RJ45S`
67. Press the **<ENTER>** button. The display reads `Telco=RJ45S`
68. Press the **<RETURN>** button. The display reads `TELCO OPT'S`
69. Press the **<DOWN>** button. The display reads `DIALING OPT'S`
70. Press the **<ACROSS>** button. The display reads `Dial=Tone`
71. Press the **<DOWN>** button until the display reads `Dial:Auto`
72. Press the **<ENTER>** button, and wait until the display reads `Dial=Auto`
73. Press the **<ACROSS>** button. The display reads `Call Timeout=60`
74. Press the **<DOWN>** button until the display reads `Call Timeout:S7`
75. Press the **<ENTER>** button, and wait until the display reads `Call Timeout=S7`
76. Press the **<RETURN>** button twice to return to the home screen.
77. Press the **<ACROSS>** button until the display reads `Save Changes=1`

78. Press the **<ENTER>** button, and wait until the display reads `Save Completed!`

79. Press the **<RETURN>** button twice to return to the home screen.

Menu Listing.

Following are the settings listed by function. The experienced technician may find this quicker to use than the preceding procedure. The listing may also be used as a quick reference for verifying that the modem is set up correctly. All settings that are changed from the default values of Option Set 1 are underlined.

NOTE

An item marked with an asterisk (*) may not appear on an individual modem due to firmware revision.

TEST OPTIONS

Test = End Test (unless test is running)
Accept RDL=On
LAL Busy Out=Off

MODULATION OPTIONS

Line=Dial
Mod=V32bis Auto
Auto Type=CCITT
Low Speed=Bell
Max Rate=14.4
Min Rate=<u>4800</u>
Fast Call=Off
AdaptiveRate=On
Mode=<u>Answer</u>
Clock=Internal
Retrain=High BER
Longspace=Off
PSTN=On
Guard Tone=Off

ACU OPTIONS

ACU Select=AT
AT Form=Async
V25Form=Bitsync
NoACU Form=Async
Default Dial=Off
Answer=<u>Ring #2</u>
Async Echo=On
Char Length=10
V25 Char=ASCII
Sync Idle=Char
V25Resp=V25bis
Parity=V.25 bis
AT Msg=Before CD
RsltCode=Enable
RsltForm=Verbose
Con Msg=DTE Rate *
Rel Msg=Off*
LPDA2 Addr=FF
LPDA2 ID=326x
LPDA2 Det=Enab
Call Progress=4

EC/DC OPTIONS

Mode=Auto Rel
Buffers=Regular*
EC=V.42
DC=Enabled
Data Form=NRZ*
Break=Destruct
Modem Flow=Off
Delay=Off
EC ID=Default

TERMINAL OPTIONS

DTE Rate=38.4
Flow=RTS/CTS
Speed Conver=On
DTR=108.2
RTS=Normal
CTS=Normal
RtsCts Delay=0
DCD=Normal
RemRTS/DCD=Codex
DCD Loss Dis=7s
DSR=Normal
Overspeed=1%
DTR Delay=S25
DTE Ct 140=Off
DTE Ct 141=Off
DTE Pin 25=Test *
Ext Select=Off
Ext Cntrl=Pin 14
Inactivity=3min

REMOTE CONFIGURATION OPTIONS

Init Rmt Cnfg?
Rmt Acc=Enable

TELCO OPTIONS

Telco=RJ11C or RJ45S
LL Tx Level=0
Line Compen=Off *
Speaker=Dialing
Volume=Medium
Netwrk Comp=Off *

DIALING OPTIONS

Pause Delay=3
Dial Wait=2
Dial=Auto
Call Timeout=S7
Blind Dial=S6
Pulse Cycle=40%
Tone Length=72

FP SECURITY OPTIONS

Enter Password?
Password=Disable
Set protection?
Change Password?

ACCESS SECURITY OPTIONS

PW Verify=Dis
Callback=Off
Rmt Num Rqrd=Off
Enter Group PW?
Group PW=Disable
Tone=None
Sim Ring=Disable
DialRstrct=Off

RESTORAL OPTIONS

HoldDialine=Off

NETWORK CONTROL OPTIONS

OverrideMode=Off

NC Address=000

NC PortRate=75

Pass Thru=Opt 1

NC Line Disc=Off *

SET REMOTE LEASED LINE ADDRESS

New Address=000

Rmt Ser#=000000

RmtNest Modem=No

’Enter’ To Set

SEARCH REMOTE LL ADDRESS

Rmt Ser#=000000

RmtNest Modem=No

’Enter’ To Srch

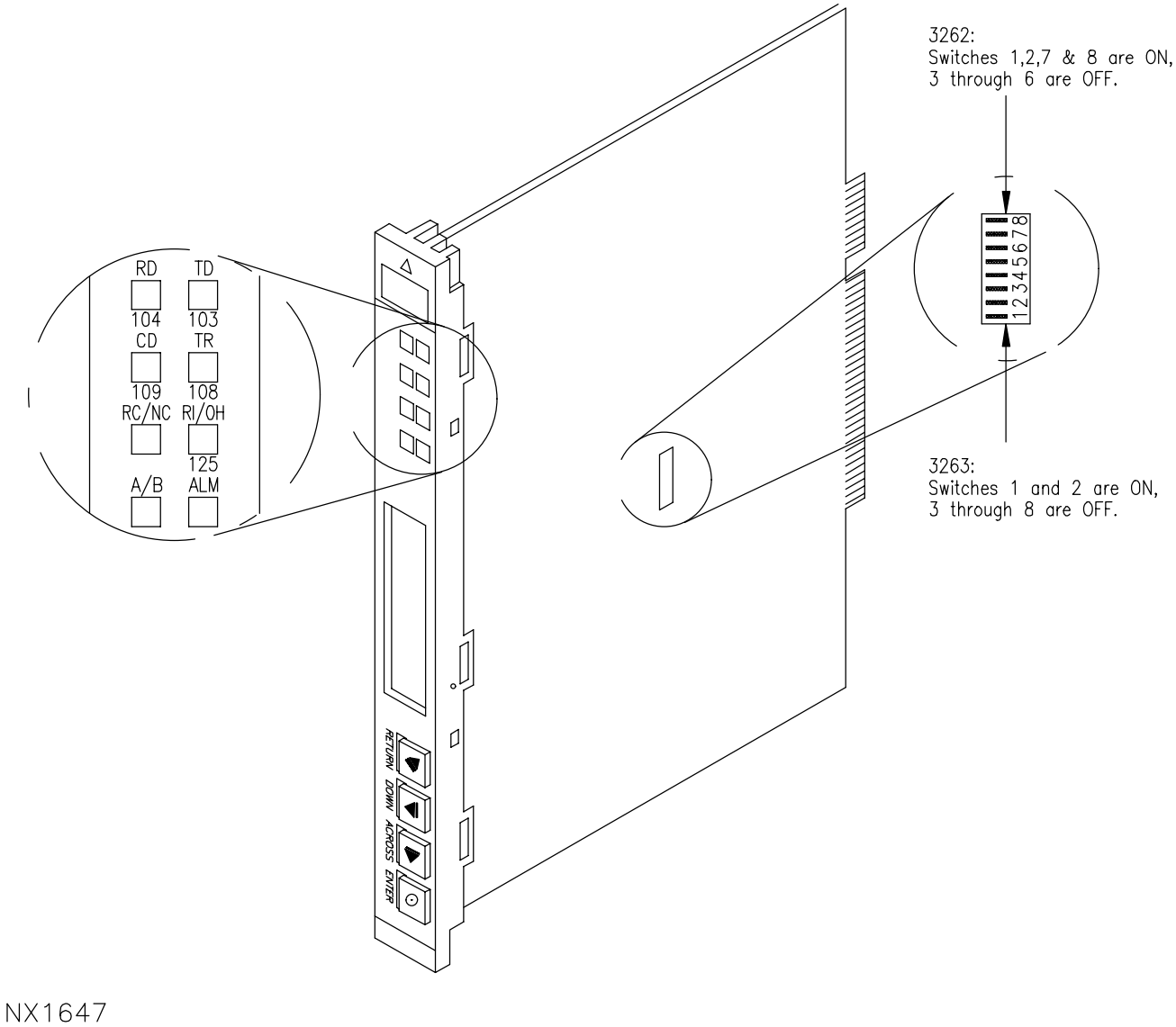

Figure 6–21. Dial and Dedicated Port (Rack–Mounted) Modem, Front Panel and DIP Switch Location

6.6.13 X.25 AWIPS DEDICATED MODEM (CODEX 3263) – 33600 SDC/SYNC SETUP PROCEDURE. APPLIES TO DoD/FAA ONLY UD70/170A5, DOVER AFB UD70A6, AND COLUMBUS AFB UD70A14.

NOTE

This procedure is normally used at DoD and FAA sites for configuring the 33.6 dedicated SDC modem in slot 5 of the modem rack (normally used for an NWS AWIPS circuit). This 3263 modem will have a part number of "PC 42703" stenciled near the top of the modem face plate. In most cases, the modems sitting in slots 6 through 20 of the modem rack are standard 14.4 modems and will have the part number "PC 21102" or "PC21103" on the face plate. However, those modems are no longer being manufactured and the PC 42703 modem can be used as substitute for either the PC 21102 of PC21103 modem (although the 33.6 SDC capability would not be used in this case). Therefore, this procedure may also be used for dedicated modems in slots 6 through 20 if it is a PC 42703 modem. In this case, option set 3 (14.4 option) must always be selected as the active option set when the procedure is complete.

See Figure 6–21

This procedure requires one technician and takes 0.5 hours.

6.6.13.1 Equipment and Tools Required. Ameritec AM–48 Personal Transmission Test Set, as necessary.

6.6.13.2 Initial Conditions/Preliminary Setup. Ensure the system is in normal operating mode. At the front panel buttons (shown as they appear when facing the rack [i.e., rotated 90 degrees from the standalone version]), perform the following functions:

Return button – when pressed within a branch of the menu, changes the Liquid Crystal Display (LCD) to the branch title screen (e.g., **TERMINAL OPT'S**`TERMINAL OPT'S`). When pressed at a branch title screen, changes the LCD to the home screen (e.g., **DATA 9600 T/D?**`DATA 9600 T/D?`).

Down button – moves from branch to branch from the main menu and selects individual setting options within the branches.

Across button – moves the screen along the branches of the modem menu tree. It also will move the cursor across data entry menus one character (or digit) at a time (e.g., S–Reg menus).

Enter button – selects the item displayed on the LCD as the current setting (if the screen displayed an = sign, it was already the current setting), or initiates an action (as in Reinit Memory?).

6.6.13.3 Procedure.

NOTE

The dedicated port (rack–mounted) 33.6Kbps with SDC modem (Codex 3263, PN 42703) should only be used for a high speed connection between the DoD and FAA RPGs and NWS AWIPS set as a RPGOPs. These procedures set the modem with two options: 1) Option 3 is set to V.32bis so the modem can communicate with the Codex 3263 14.4Kbps modem, and 2) Option 4 is set to V.34 so the modem can communicate with another Codex 3263 33.6Kbps with SDC modem. The option 3 setting is being implemented to support temporary connections to 14.4Kbps modems while the 33.6Kbps modems are being fielded. It is required that both options are set.

Perform the following RPG modem setup procedures for Option 3.

1. Press the **<RETURN>** button twice (ensures beginning from the home screen).
2. Press the **<ACROSS>** button until the display reads `Reinit Memory?`
3. Press the **<ENTER>** button once. The display reads `Reinit All Mem?`
4. Press the **<ENTER>** button again. The display reads `3263 Fast Init.`
5. Press the **<RETURN>** button. The display reads `Disconnect T/D?`
6. Press the **<ACROSS>** button until the display reads `Select Options=1`
7. Press the **<DOWN>** button until the display reads `Select Options:3`
8. Press the **<ENTER>** button. The display reads `Select Complete!`
9. Press the **<RETURN>** button twice to ensure starting from the home screen.
10. Press the **<DOWN>** button until the display reads `MODULATION OPT'S`
11. Press the **<ACROSS>** button until the display reads `Line=Dial`
12. Press the **<DOWN>** button until the display reads `Line:4W Lease`
13. Press the **<ENTER>** button. The display reads `Line=4W Lease`
14. Press the **<ACROSS>** button until the display reads `Mod=V.34 Auto`
15. Press the **<DOWN>** button until the display reads `Mod:V32bis Auto`
16. Press the **<ENTER>** button. The display reads `Mod=V32bis Auto`
17. Press the **<ACROSS>** button until the display reads `Min Rate=300`
18. Press the **<DOWN>** button until the display reads `Min Rate:4800`
19. Press the **<ENTER>** button. The display reads `Min Rate=4800`

20. Press the **<ACROSS>** button until the display reads `Fast Call=Lv13`
21. Press the **<DOWN>** button until the display reads `Fast Call:Off`
22. Press the **<ENTER>** button. The display reads `Fast Call=Off`
23. Press the **<ACROSS>** button until the display reads `Mode=Originate`
24. Press the **<DOWN>** button until the display reads `Mode:Answer`
25. Press the **<ENTER>** button. The display reads `Mode=Answer`
26. Press the **<ACROSS>** button until the display reads `Clock=Internal`
27. Press the **<DOWN>** button until the display reads `Clock:Loopback`
28. Press the **<ENTER>** button. The display reads `Clock=Loopback`
29. Press the **<ACROSS>** button until the display reads `PSTN=On`
30. Press the **<DOWN>** button. The display reads `PSTN:Off`
31. Press the **<ENTER>** button. The display reads `PSTN=Off`
32. Press the **<RETURN>** button. The display reads `MODULATION OPT's`
33. Press the **<DOWN>** button until the display reads `EC/DC OPT'S`
34. Press the **<ACROSS>** button until the display reads `Mode=Auto Rel`
35. Press the **<DOWN>** button until the display reads `Mode:Direct`
36. Press the **<ENTER>** button. The display reads `Mode=Direct`
37. Press the **<ACROSS>** button until the display reads `Delay=Buf Or S38`
38. Press the **<DOWN>** button until the display reads `Delay:Off`
39. Press the **<ENTER>** button. The display reads `Delay=Off`
40. Press the **<RETURN>** button. The display reads `EC/DC OPT'S`
41. Press the **<DOWN>** button until the display reads `ACU OPT'S`
42. Press the **<ACROSS>** button until the display reads `ACU Select=None`
43. Press the **<DOWN>** button until the display reads `ACU Select:V25b`
44. Press the **<ENTER>** button. The display reads `ACU Select=V25b`
45. Press the **<ACROSS>** button until the display reads `Default Dial=1`
46. Press the **<DOWN>** button until the display reads `Default Dial:Off`
47. Press the **<ENTER>** button. The display reads `Default Dial=Off`
48. Press the **<ACROSS>** button until the display reads `Answer=Ring #1`

49. Press the **<DOWN>** button until the display reads `Answer:Manual`
50. Press the **<ENTER>** button. The display reads `Answer=Manual`
51. Press the **<RETURN>** button. The display reads `ACU OPT'S`
52. Press the **<DOWN>** button. The display reads `TERMINAL OPT's`
53. Press the **<ACROSS>** button until the display reads `DTE Rate=56.0`
54. Press the **<DOWN>** button until the display reads `DTE Rate:14.4`
55. Press the **<ENTER>** button. The display reads `DTE Rate=14.4`
56. Press the **<ACROSS>** button until the display reads `Flow=Tx Clk`
57. Press the **<DOWN>** button until the display reads `Flow:RTS/CTS`
58. Press the **<ENTER>** button. The display reads `Flow=RTS/CTS`
59. Press the **<RETURN>** button. The display reads `TERMINAL OPT'S`
60. Press the **<DOWN>** button. The display reads `TELCO OPT'S`
61. Press the **<ACROSS>** button until the display reads `LL Tx Level=0`

NOTE

This item should be set to 0 dBm when the modem being set is connected to a leased line provided by the local telephone company, unless it is a zero–loss circuit (utilized by some FAA installations). For zero–loss circuits, direct wire applications, and any dedicated modems without circuits connected to them, the transmit level should be set initially to –15 dBm. Use the (**DOWN**) button and the (**ENTER**) button to work toward 0 dBm to obtain a level that yields a received power level of –16 dBm ± 1 dBm into 600Ω load at the remote modem. This power level may be checked with the AM–48 test set. If the test set is not available, utilize the following (less accurate) procedure performed on the remote modem by personnel at the remote site.

a. Press the **<RETURN>** button twice (ensures beginning from the home screen).

b. Press the **<ACROSS>** button 3 times. If display already indicates `RX Level= ____dBm`, skip steps c and d. Evaluate receive level as indicated following step d.

c. Press the **<ACROSS>** button until the display reads `PhaseJitter=____dg`

d. Press the **<DOWN>** button until the display reads `Rx Level=____dBm`

e. Press the **<ENTER>** button once. The display still reads `Rx Level=____dBm`

This sets Rx Level as the top screen of this menu. If during the setting procedure, the modem returns to the home screen (e.g., DATA 14.4`DATA 14.4 T/D?`) pressing the **<ACROSS>** button three times will return the display to the Rx Level display. This display may be consulted to determine if the received signal level is sufficient. The value obtained by this method should be between –16 dBm and –13 dBm (this takes into account cumulative errors of measurement and display). The possible range of values that may be set in the LL Tx Level=0 menus is 0 to –15 dBm in 1 dBm steps. If needed, alter the transmit level at the local site as follows or skip to step 62.

f. Press the **<DOWN>** button until the display reads `LL Tx Level:-15`

g. Press the **<ENTER>** button. The display reads `LL Tx Level=-15`

62. Press the **<RETURN>** button twice (ensures beginning from the home screen).
63. Press the **<ACROSS>** button until the display reads `Save Changes=3`
64. Press the **<ENTER>** button, and wait until the display reads `Save Completed!`
65. Press the **<RETURN>** button twice to return to the home screen

Perform the following modem settings for Option 4.

1. Press the **<RETURN>** button twice (ensures beginning from the home screen).
2. Press the **<ACROSS>** button until the display reads `Select Options=3`
3. Press the **<DOWN>** button until the display reads `Select Options:4`
4. Press the **<ENTER>** button. The display reads `Select Complete!`
5. Press the **<RETURN>** button until the display reads `LineProbing T/D?`
6. Press the **<DOWN>** button until the display reads `MODULATION OPT'S`
7. Press the **<ACROSS>** button. The display reads `Line=2W Lease`
8. Press the **<DOWN>** button. The display reads `Line:4W Lease`
9. Press the **<ENTER>** button. The display reads `Line=4W Lease`
10. Press the **<ACROSS>** button until the display reads `PSTN=On`
11. Press the **<DOWN>** button. The display reads `PSTN:Off`
12. Press the **<ENTER>** button. The display reads `PSTN=Off`
13. Press the **<RETURN>** button. The display reads `MODULATION OPT'S`
14. Press the **<DOWN>** button. The display reads `RESTORAL OPT'S`
15. Press the **<ACROSS>** button. The display reads `Rest=FP/Auto`

16. Press the **<DOWN>** button until the display reads `Rest:Off`
17. Press the **<ENTER>** button. The display reads `Rest=Off`
18. Press the **<RETURN>** button. The display reads `RESTORAL OPT'S`
19. Press the **<DOWN>** button until the display reads `TERMINAL OPT'S`
20. Press the **<ACROSS>** button until the display reads `DTR=High`
21. Press the **<DOWN>** button until the display reads `DTR:108.1`
22. Press the **<ENTER>** button. The display reads `DTR=108.1`
23. Press the **<RETURN>** button. The display reads `TERMINAL OPT'S`
24. Press the **<DOWN>** button. The display reads `TELCO OPT'S`
25. Press the **<ACROSS>** button until the display reads `LL Tx Level=____`

NOTE

This item should be set to 0 dBm when the modem being set is connected to a leased line provided by the local telephone company, unless it is a zero–loss circuit (utilized by some FAA installations). For zero–loss circuits, direct wire applications, and any dedicated modems without circuits connected to them, the transmit level should be set initially to –15 dBm. Use the (**DOWN**) button and the (**ENTER**) button to work toward 0 dBm to obtain a level that yields a received power level of –16 dBm ± 1 dBm into 600Ω load at the remote modem. This power level may be checked with the AM–48 test set. If the test set is not available, utilize the following (less accurate) procedure performed on the remote modem by personnel at the remote site.

a. Press the **<RETURN>** button twice (ensures beginning from the home screen).

b. Press the **<ACROSS>** button 3 times. If display already indicates `RX Level=____dBm`, skip steps c and d. Evaluate receive level as indicated following step d.

c. Press the **<ACROSS>** button until the display reads `PhaseJitter=____dg`

d. Press the **<DOWN>** button until the display reads `Rx Level=____dBm`

e. Press the **<ENTER>** button once. The display still reads `Rx Level=____dBm`

This sets Rx Level as the top screen of this menu. If during the setting procedure, the modem returns to the home screen (e.g., DATA 14.4`DATA 14.4 T/D?`) pressing the **<ACROSS>** button three times will return the display to the Rx Level display. This display may be consulted to determine if the received signal level is sufficient. The value obtained by this method should be between –16 dBm and –13 dBm (this takes into account cumulative errors of measurement and display). The possible range of values that may be set in the LL Tx Level=0 menu is 0 to –15 dBm in 1 dBm steps. If needed, alter the transmit level at the local site as follows or skip to step 26.

f. Press the **<DOWN>** button until the display reads `LL Tx Level:-15`

g. Press the **<ENTER>** button. The display reads `LL Tx Level=-15`

26. Press the **<RETURN>** button twice (ensures beginning from the home screen).
27. Press the **<ACROSS>** button until the display reads `Save Changes=4`
28. Press the **<ENTER>** button, and wait until the display reads `Save Completed!`
29. Press the **<RETURN>** button twice to return to the home screen

To change from Option 4 to Option 3 perform the following procedures:

1. Press the **<RETURN>** button twice.
2. Press the **<ACROSS>** button until the display reads `Select Options=4`
3. Press the **<DOWN>** button until the display reads `Select Options:3`
4. Press the **<ENTER>** button. The display reads `Select Complete!`

To change from Option 3 to Option 4 perform the following procedures:

1. Press the **<RETURN>** button twice
2. Press the **<ACROSS>** button until the display reads `Select Options=3`
3. Press the **<DOWN>** button until the display reads `Select Options:4`
4. Press the **<ENTER>** button. The display reads `Select Complete!`

Menu Listing:

Following are the settings listed by branch option menu. The experienced technician may find this quicker to use than the preceding procedure. The listing may also be used as a quick reference for verifying that the modems are set up correctly. All settings that are changed from the default values are underlined.

Modem Command	Option 3 Setting	Option 4 Setting
TEST OPT'S		
Test=	End Test	End Test
Accept RDL=	On	On
MODULATION OPT'S		
Line=	4W Lease	4W Lease
Mod=	V32bis Auto	V.34 Auto
Auto Type=	CCITT	CCITT
Low Speed=	Bell	Bell
Max Rate=	14.4	33.6
Min Rate=	4800	9600
V.34 Asym=	On	On
Fast Call=	Off	Lv13
AdaptiveRate=	On	On
Mode=	Answer	Answer
Clock=	Lookback	Internal
Retrain=	High BER	High BER
Longspace=	Off	Off
PSTN=	Off	Off
Guard Tone=	Off	Off
RESTORAL OPT's		
Rest=	Off	Off
L to D=	Low/Fast	Low/Fast
D to L=	Manual	1 hour
HoldDialine=	Off	5 min
Ans Rest=	LL Fail	LL Fail
EC/DC OPTIONS		
Mode=	Direct	Auto Rel
Buffers=	Regular	Regular
EC=	V.42	V.42
DC=	Enabled	Enabled

Modem Command	Option 3 Setting	Option 4 Setting
Data Form=	NRZ	NRZ
Break=	Destruct	Destruct
Modem Flow=	On	On
Delay=	Off	Off
EC ID=	Default	Default
ACU OPTIONS		
ACU Select=	V25b	None
AT Form=	Async	Async
V25Form=	Bitsync	Bitsync
NoACU Form=	Sync	Sync
Default dial=	Off	1
Answer=	Manual	Ring #1
Async Echo=	On	On
Char Length=	10	10
V25 Char=	ASCII	ASCII
Sync Idle=	Char	Char
V25Resp=	V25bis	V25bis
Parity=	V.25bis	V.25bis
AT Msg=	Before CD	Before CD
RsltCode=	Enabled	Enabled
RsltForm=	Verbose	Verbose
Con Msg=	DTE Rate	DTE Rate
Rel Msg=	Off	Off
LPDA2 Addr=	FF	FF
LPDA2 ID=	326x	326x
ACU OPTIONS (cont.)		
LPDA2 Det=	Enab	Enab
Call Progress=	4	4
TERMINAL OPT'S		

Modem Command	Option 3 Setting	Option 4 Setting
DTE Rate=	14.4	56.0
Flow=	RTS/CTS	Tx Clk
TpDlyMin=	Rx Clk	Rx Clk
Speed Conver=	On	On
DTR=	108.1	108.1
RTS=	Normal	Normal
CTS=	Normal	Normal
RtsCts Delay=	0	0
DCD=	Normal	Normal
RemRTS/DCD=	Codex	Codex
DCD loss Dis=	S10	S10
DSR=	Normal	Normal
Overspeed=	1%	1%
DTR Delay=	S25	S25
DTE Ct 140=	Off	Off
DTE Ct 141=	Off	Off
Ext Select=	Off	Off
Ext Cntrl=	Pin 14	Pin 14
Inactivity=	S30	S30
TELCO OPT'S		
Telco=	RJ11C	RJ11C
LL TX Level=	0 to –15 (see procedure)	0 to –15 (see procedure)
Line Compen=	Off	Off
Speaker=	Dialing	Dialing
Volume=	Medium	Medium
Netwrk Comp=	Off	Off
DIALING OPT'S		
Pause Delay=	3	3
Dial Wail=	2	2
Dial=	Tone	Tone
Call Timeout=	60	60

Modem Command	Option 3 Setting	Option 4 Setting
Blind Dial=	S6	S6
Pulse Cycle=	40%	40%
Tone Length=	72	72
FP SECURITY		
Enter Password?		
FP SECURITY Cont.		
Password=	Disable	Disable
Set Protection?		
Change Password?		
ACCESS SECURITY		
PW Verify=	Dis	Dis
Callback=	Off	Off
Rmt Num Rqrd=	Off	Off
Enter Group PW?		
Group PW=	Disable	Disable
Tone=	None	None
Sim Ring=	Disable	Disable
DialRstrct=	Off	Off
NETWK CNTL OPT'S		
OverrideMode=	Off	Off
NC Address=	000	000
NC PortRate=	75	75
Pass Thru=	Opt 1	Opt 1
NC Line Disc=	Off	Off
RMT CONFIG OPT'S		
Init Rmt Confg?		
Rmt Acc=	Enable	Enable
SET RMT LL ADDR		

Modem Command	Option 3 Setting	Option 4 Setting
New Address=	000	000
RmtSer=	000000	000000
RmtNest Modem=	No	No
’Enter’ To Set		
SEARCH RMT LL ADDR		
RmtSer=	000000	000000
RmtNest Modem=	No	No
’Enter’ To Srch		
HOME SCREEN (Press Return Twice)		
Rx= Tx=		
DTE	14.4 COMMND	56.0 COMMND
PhaseJitter=		
HOME SCREEN (Press Return Twice) Cont.		
Select Option=	3	4
Save Changes=	3	4
Power Up In=	Old	Old
Reinit Memory?		
Dial From#=	1	1
View Phone#=	1	1
Enter Phone#=	1	1
Link Phone#=	1	1
Enter Then Dial		
Auto Redial=	Off	Off
S–Reg 000=	000	000

6.6.14 X.25 DEDICATED MODEM (CODEX 3263) – 14400/SYNC SETUP PROCEDURE. DEFAULT SETUP FOR UD70/170A6 – A16.

NOTE

In most cases, the modems sitting in slots 6 through 20 of the modem rack are standard 14.4 modems and will have the part number "PC 21102" on the face plate. However, those modems are no longer being manufactured and the PC 42703 modem can be used as substitute for the PC 21102 modem (although the 33.6 SDC capability would not be used in this case). If a substitute PC 42703 modem is received for one of the modems in slots 6 through 20, perform the setup procedure in 6.6.13 in lieu of this procedure. In this case, option set 3 (14.4 option) must always be selected as the active option set when that procedure is complete.

See Figure 6–21.

This procedure requires one technician and takes 0.5 hours.

6.6.14.1 Equipment and Tools Required.

1. Ameritec AM–48 Personal Transmission Test Set, as necessary.

6.6.14.2 Initial Conditions/Preliminary Setup. Ensure the system is in normal operating mode. Verify modem card DIP switches are set correctly IAW Figure 6–21. At the front panel buttons (shown as they appear when facing the rack [i.e., rotated 90 degrees from the stand alone version]), perform the following functions:

Return button – when pressed within a branch of the menu, changes the LCD to the branch title screen (e.g., `TERMINAL OPT'S`). When pressed at a branch title screen, changes the LCD to the home screen (e.g., `DATA 14.4 T/D?`).

Down button – moves from branch to branch from the main menu and selects individual setting options within the branches.

Across button – moves the screen along the branches of the modem menu tree. It also moves the cursor across data entry menus one character (or digit) at a time (e.g., S–Reg menus).

Enter button – selects the item displayed on the LCD as the current setting (if the screen displayed an = sign, it was already the current setting), or initiates an action (as in Reinit Memory?).

6.6.14.3 Procedure.

NOTE

Due to differences in modem models, some default display readings will vary between sites. Operators should carefully note desired modem settings and follow data input sequences until these settings are accomplished. (Example 1: While some systems default to a DTE Rate of 14.4, others default to 33.6. In the event the system defaults to 33.6, and the desired reading is 14.4, follow the button sequence until the display reading is 14.4. Example 2: While following procedures for the S–Reg reading, the system may begin with S–Reg = 030 or it may default to some other reading. If the desired reading is S–Reg = 180, perform the button sequence until this reading is achieved.)

1. Press the **<RETURN>** button twice (ensures beginning from the home screen).
2. Press the **<ACROSS>** button until the display reads `Reinit Memory?`
3. Press the **<ENTER>** button once. The display reads `Reinit All Mem?`
4. Press the **<ENTER>** button again. The display reads `3263 Initial`
5. Press the **<RETURN>** button. The display reads `Disconnect  T/D?`
6. Press the **<ACROSS>** button until the display reads `Select Options=1`
7. Press the **<DOWN>** button until the display reads `Select Options:3`
8. Press the **<ENTER>** button. The display reads `Select Complete!`
9. Press the **<ACROSS>** button until the display reads `Power Up In=Old`
10. Press the **<DOWN>** button until the display reads `Power Up In:3`
11. Press the **<ENTER>** button. The display reads `Power Up In=3`
12. Press the **<RETURN>** button. The display reads `Disconnect T/D?`
13. Press the **<DOWN>** button until the display reads `MODULATION OPT'S`
14. Press the **<ACROSS>** button. The display reads `Line=Dial`
15. Press the **<DOWN>** button until the display reads `Line:4W Lease`
16. Press the **<ENTER>** button. The display reads `Line=4W Lease`
17. Press the **<ACROSS>** button until the display reads `Max Rate=14.4` or `Max Rate=33.6`
18. Press the **<DOWN>** button until the display reads `Max Rate:14.4`
19. Press the **<ENTER>** button. The display reads `Max Rate=14.4`

20. Press the **<ACROSS>** button. The display reads `Min Rate=300`
21. Press the **<DOWN>** button until the display reads `Min Rate:4800`
22. Press the **<ENTER>** button. The display reads `Min Rate=4800`
23. Press the **<ACROSS>** button until the display reads `Mode=Originate`
24. Press the **<DOWN>** button. The display reads `Mode:Answer`
25. Press the **<ENTER>** button. The display reads `Mode=Answer`
26. Press the **<ACROSS>** button until the display reads `Clock=Internal`
27. Press the **<DOWN>** button. The display reads `Clock:Loopback`
28. Press the **<ENTER>** button. The display reads `Clock=Loopback`
29. Press the **<ACROSS>** button until the display reads `PSTN=On`
30. Press the **<DOWN>** button. The display reads `PSTN:Off`
31. Press the **<ENTER>** button. The display reads `PSTN=Off`
32. Press the **<RETURN>** button. The display reads `MODULATION OPT'S`
33. Press the **<DOWN>** button until the display reads `TERMINAL OPT'S`
34. Press the **<ACROSS>** button. The display reads `DTE Rate=14.4 or DTE Rate=28.8`
35. Press the **<DOWN>** button until the display reads `DTE Rate:14.4`
36. Press the **<ENTER>** button. The display reads `DTE Rate=14.4`
37. Press the **<ACROSS>** button. The display reads `Flow=XON/XOFF`
38. Press the **<DOWN>** button until the display reads `Flow:RTS/CTS`
39. Press the **<ENTER>** button. The display reads `Flow=RTS/CTS`
40. Press the **<ACROSS>** button until the display reads `DTR=108.2`
41. Press the **<DOWN>** button until the display reads `DTR:108.1`
42. Press the **<ENTER>** button. The display reads `DTR=108.1`
43. Press the **<RETURN>** button. The display reads `TERMINAL OPT'S`
44. Press the **<DOWN>** button. The display reads `TELCO OPT'S`
45. Press the **<ACROSS>** button until the display reads `LL Tx Level=0`

NOTE

This item should be set to 0 dBm when the modem being set is connected to a leased line provided by the local telephone company, if so skip to step 48. Otherwise continue with this NOTE.

For zero–loss circuits (utilized by some FAA installations), direct wire applications, and any dedicated modems without circuits connected to them the transmit level should be set initially to –15 dBm. Use the (**DOWN**) button and the (**ENTER**) button to work toward 0 dBm to obtain a level that yields a received power level of –16 dBm ± 1 dBm into 600 Ω at the remote modem. This power level may be checked with the AM–48 test set. If the test set is not available, utilize the following (less accurate) procedure performed at the remote modem by personnel at the remote site:

a. Press the **<RETURN>** button twice (ensures beginning from the home screen).

b. Press the **<ACROSS>** button twice. If display already indicates `RX Level=____dBm`, skip steps c and d. Evaluate receive level as indicated following step `d.`

c. Press the **<ACROSS>** button twice. The display reads `PhaseJitter= ___dg`

d. Press the **<DOWN>** button until the display reads `Rx Level=____dBm`

e. Press the **<ENTER>** button once. The display still reads `Rx Level=____dBm`

This sets **Rx Level** as the top screen of this menu. If during the setting procedure, the modem returns to the home screen (e.g., `DATA 14.4 T/D?`) pressing the (**ACROSS**) button twice will return the display to the **Rx Level** display. This display may be consulted to determine if the received signal level is sufficient. The value obtained by this method should be between –16 dBm and –13 dBm (this takes into account cumulative errors of measurement and display). The possible range of values that may be set in the LL Tx Level=0 menu is 0 to –15 dBm in 1 dBm steps. If needed, alter the transmit level at the local site as follows or skip to step 48.

46. Press the **<DOWN>** button until the display reads `LL Tx Level:-15`

47. Press the **<ENTER>** button. The display reads `LL Tx Level=-15`

48. Press the **<RETURN>** button twice to return to the home screen.
49. Press the **<ACROSS>** button until the display reads `Save Changes=3`
50. Press the **<ENTER>** button, and wait until the display reads `Save Completed!`
51. Press the **<RETURN>** button twice to return to the home screen.

Menu Listing.

On the next two pages are the settings listed by branch option menu. The experienced technician may find this quicker to use than the preceding procedure. The listing may also be used as a quick reference for verifying that the modems are set up correctly. All settings that are changed from the default values for Option Set 3 are underlined.

NOTE

An item marked with an asterisk (*) may not appear on an individual modem due to differences in firmware revision level.

TEST OPTIONS

Test = End Test (unless test is running)
Accept RDL=On

MODULATION OPTIONS

Line=4W Lease
Mod=V32bis Auto
Auto Type=CCITT
Low Speed=Bell
Max Rate=14.4
Min Rate=4800
Fast Call =Off
AdaptiveRate=On
Mode=Answer
Clock = Loopback
Retrain=High BER
Longspace = Off
PSTN = Off
Guard Tone=Off

RESTORAL OPTIONS

EC/DC OPTIONS

Mode=Direct
Buffers=Regular *
EC = V.42
DC = Enabled
Break=Destruct
Modem Flow=On
Delay=Off
EC ID=Default

ACU OPTIONS

ACU Select=V25b
AT Form=Async
V25Form=Bitsync
NoACU Form=Sync
Default Dial=Off
Answer=Manual
Async Echo=On
Char Length = 10
V25 Char=ASCII
Sync Idle = Char

Rest=Off
L to D=Low/Fast
D to L = Manual
HoldDialine=Off
Ans Rest=LL Fail

TERMINAL OPTIONS

DTE Rate = 14.4
Flow=RTS/CTS
Speed Conver=On
DTR = 108.1
RTS = Normal
CTS = Normal
RtsCts Delay=0
DCD=Normal
RemRTS/DCD=Codex
DCD Loss Dis=S10
DSR=Normal
Overspeed = 1%
DTR Delay=S25
DTE Ct 140=Off
DTE Ct 141=Off
Ext Select=Off
Ext Cntrl=Pin 14
Inactivity=S30

TELCO OPTIONS

Telco=RJ11C
LL Tx Level=0 to –15 (see text)
Line Compen=Off *
Speaker=Dialing
Volume=Medium
Netwrk Comp=Off *
V25Resp=V25bis
Parity=V.25 bis
AT Msg=Before CD
RsltCode=Enable
RsltForm=Verbose
Con Msg=DTE Rate *
Rel Msg=Off
LPDA2 Addr=FF
LPDA2 ID = 326x
LPDA2 Det=Enab
Call Progress=4

FP SECURITY OPTIONS

Enter Password?
Password=Disable
Set Protection?
Change Password?

ACCESS SECURITY OPTIONS

PW Verify=Dis
Callback=Off
Rmt Num Rqrd=Off
Enter Group PW?
Group PW=Disable
Tone=None
Sim Ring=Disable
DialRstrct=Off

NETWORK CONTROL OPTIONS

OverrideMode=Off
NC Address=000
NC PortRate=75
Pass Thru=Opt 1

REMOTE CONFIGURATION OPTIONS

DIALING OPTIONS

Pause Delay=3

Dial Wait = 2

Dial=Tone

Call Timeout=60

Blind Dial = S6

Pulse Cycle=40%

Tone Length=72

Init Rmt Cnfg?

Rmt Acc=Enable

SET RMT LL ADDRESS

New Address=000

Rmt Ser#=000000

RmtNest Modem=No

'Enter' To Set

SEARCH RMT LL ADDRESS

Rmt Ser#=000000

RmtNest Modem=No

'Enter' To Srch

6.6.15 X.25 ITWS DEDICATED MODEM (CODEX 3263) – 33600/SYNC SETUP PROCEDURE. APPLIES FOR ONE TO THREE MODEMS IN LOCATIONS UD70/170A14A6 – A16 (SITE DEPENDENT).

See Figure 6–21.

This procedure requires one technician and takes 0.5 hours.

6.6.15.1 Equipment and Tools Required.

1. Ameritec AM–48 Personal Transmission Test Set, as necessary.

6.6.15.2 Initial Conditions/Preliminary Setup. Ensure the system is in normal operating mode. Verify modem card DIP switches are set correctly IAW Figure 6–21. At the front panel buttons (shown as they appear when facing the rack [i.e., rotated 90 degrees from the stand alone version]), perform the following functions:

Return button – when pressed within a branch of the menu, changes the LCD to the branch title screen (e.g., `TERMINAL OPT'S`). When pressed at a branch title screen, moves the LCD display to the main screen (e.g., `DATA 14.4 T/D?` or `V32b 14.4 T/D?`).

Down button – moves from branch to branch from the main menu and selects individual setting options within the branches.

Across button – moves the screen along the branches of the modem menu tree.

Enter button – selects the item displayed on the LCD screen as the current setting (if the screen displayed an = sign, it was already the current setting), or initiates an action (as in Reinit Memory?).

6.6.15.3 Procedure.

NOTE

This procedure is used for configuring 33.6 dedicated SDC modem(s) in the modem rack for up to three ITWS circuits. The ITWS circuits must specifically be designated as 33600 in the RPG circuit documentation. Otherwise, perform the modem setup procedure in paragraph 6.6.14 to configure the ITWS modem for 14400 operation. The 33.6 modem will have a part number of PC 42703 stenciled near the top of the modem face plate. Due to differences in modem models, some default display readings will vary between sites. Operators should carefully note desired modem settings and follow data input sequences until these settings are accomplished. (Example 1: While some systems default to a DTE Rate of 14.4, others default to 33.6. In the event the system defaults to 14.4, and the desired reading is 33.6, follow the button sequence until the display reading is 33.6. Example 2: While following procedures for the S–Reg reading, the system may begin with S–Reg = 030 or it may default to some other reading. If the desired reading is S–Reg = 180, perform the button sequence until this reading is achieved.)

1. Press the **<RETURN>** button twice (ensures beginning from the home screen).
2. Press the **<ACROSS>** button until the display reads `Reinit Memory?`
3. Press the **<ENTER>** button once. The display reads `Reinit All Mem?`
4. Press the **<ENTER>** button again. The display reads `3263 Fast Init`
5. Press the **<RETURN>** button. The display reads `Disconnect T/D?`
6. Press the **<ACROSS>** button until the display reads `Select Options=1`
7. Press the **<DOWN>** button until the display reads `Select Options:3`
8. Press the **<ENTER>** button. The display reads `Select Complete!`
9. Press the **<ACROSS>** button until the display reads `Power Up In=Old`
10. Press the **<DOWN>** button until the display reads `Power Up In:3`
11. Press the **<ENTER>** button. The display reads `Power Up In=3`

NOTE

The following step may take approximately 10 seconds to 1 minute before `Disconnect T/D?` is displayed.

12. Press the **<RETURN>** button. The display reads `Disconnect T/D?`

13. Press the **<DOWN>** button until the display reads `MODULATION OPT'S`
14. Press the **<ACROSS>** button. The display reads `Line=Dial`
15. Press the **<DOWN>** button until the display reads `Line:4W Lease`
16. Press the **<ENTER>** button. The display reads `Line=4W Lease`
17. Press the **<ACROSS>** button until the display reads `Max Rate=33.6`
18. Press the **<DOWN>** button until the display reads `Max Rate:33.6`
19. Press the **<ENTER>** button. The display reads `Max Rate=33.6`
20. Press the **<ACROSS>** button. The display reads `Min Rate=9600`
21. Press the **<DOWN>** button until the display reads `Min Rate:4800`
22. Press the **<ENTER>** button. The display reads `Min Rate=4800`
23. Press the **<ACROSS>** button until the display reads `Mode=Originate`
24. Press the **<DOWN>** button. The display reads `Mode:Answer`
25. Press the **<ENTER>** button. The display reads `Mode=Answer`
26. Press the **<ACROSS>** button until the display reads `Clock=Internal`
27. Press the **<DOWN>** button. The display reads `Clock:Loopback`
28. Press the **<ENTER>** button. The display reads `Clock=Loopback`
29. Press the **<ACROSS>** button until the display reads `PSTN=On`
30. Press the **<DOWN>** button. The display reads `PSTN:Off`
31. Press the **<ENTER>** button. The display reads `PSTN=Off`
32. Press the **<RETURN>** button. The display reads `MODULATION OPT'S`
33. Press the **<DOWN>** button until the display reads `EC/DC OPTIONS`
34. Press the **<ACROSS>** button. The display reads `Mode=Auto Rel`
35. Press the **<DOWN>** button until the display reads `Mode:Direct`
36. Press the **<ENTER>** button. The display reads `Mode=Direct`
37. Press the **<RETURN>** button. The display reads `EC/DC OPTIONS`
38. Press the **<DOWN>** button until the display reads `TERMINAL OPT'S`
39. Press the **<ACROSS>** button. The display reads `DTE Rate=28.8`
40. Press the **<DOWN>** button until the display reads `DTE Rate:33.6`

41. Press the **<ENTER>** button. The display reads `DTE Rate=33.6`
42. Press the **<ACROSS>** button. The display reads `Flow=Transmit`
43. Press the **<DOWN>** button until the display reads `Flow:RTS/CTS`
44. Press the **<ENTER>** button. The display reads `Flow=RTS/CTS`
45. Press the **<RETURN>** button. The display reads `TERMINAL OPT'S`
46. Press the **<DOWN>** button. The display reads `TELCO OPT'S`
47. Press the **<ACROSS>** button until the display reads `LL Tx Level=0`

NOTE

This item should be set to 0 dBm when the modem being set is connected to a leased line provided by the local telephone company, if so skip to step 50. Otherwise continue with this NOTE.

For zero–loss circuits (utilized by some FAA installations) direct wire applications, and any dedicated modems without circuits connected to them the transmit level should be set initially to –15 dBm.

Use the (**DOWN**) button and the (**ENTER**) button to work toward 0 dBm to obtain a level that yields a received power level of –16 dBm ± 1 dBm into 600 Ω at the remote modem. This power level may be checked with the AM–48 test set. If the test set is not available, utilize the following (less accurate) procedure performed at the remote modem by personnel at the remote ITWS site:

a. Press the **<RETURN>** button twice (ensures beginning from the home screen).

b. Press the **<ACROSS>** button until the display reads `PhaseJitter= ___dg`

c. Press the **<DOWN>** button until the display reads `Rx Level=____dBm`

d. Press the **<ENTER>** button once. The display still reads `Rx Level=____dBm`

This sets **Rx Level** as the top screen of this menu. If during the setting procedure, the modem returns to the home screen (e.g., `DATA 14.4 T/D?`) pressing the (**ACROSS**) button twice

will return the LCD to the **Rx Level** display. This display may be consulted to determine if the received signal level is sufficient. The value obtained by this method should be between –16 dBm and –13 dBm (this takes into account cumulative errors of measurement and display). The possible range of values that may be set in the LL Tx Level=0 menu is 0 to –15 dBm in 1 dBm steps. If needed, alter the transmit level at the local site as follows or skip to step 49.

48. Press the **<DOWN>** button until the display reads `LL Tx Level:-15`
49. Press the **<ENTER>** button. The display reads `LL Tx Level=-15`
50. Press the **<RETURN>** button twice to return to the home screen.
51. Press the **<ACROSS>** button until the display reads `Save Changes=3`
52. Press the **<ENTER>** button, and wait until the display reads `Save Completed!`
53. Press the **<RETURN>** button twice to return to the home screen.

Menu Listing.

On the following two pages are the settings listed by branch option menu. The experienced technician may find this quicker to use than the preceding procedure. The listing may also be used as a quick reference for verifying that the modems are set up correctly. All settings that are changed from the default values for Option Set 1 are underlined.

TEST OPTIONS

Test=End Test (unless test is running)
Accept RDL=On
LAL Busy Out=Off

MODULATION OPTIONS

Line=4W Lease
Mod=V34 Auto
Auto Type=CCITT
Low Speed=Bell
Max Rate=33.6
Min Rate=4800
V.34 Asym=On
Fast Call=Off
AdaptiveRate=On
Mode=Answer
Clock=Loopback

EC/DC OPTIONS

Mode=Direct
Buffers=Regular
EC=V.42
DC=Enabled
Data Form=NRZ
Break=Destruct
Modem Flow=Off
Delay=Off
EC ID=Default

ACU OPTIONS

ACU Select=V25b
AT Form=Async
V25Form=Bitsync
NoACU Form=Sync
Default Dial=Off

Retrain=High BER
Longspace=Off
PSTN=Off
Guard Tone=Off

RESTORAL OPTIONS

Rest=Off
L to D=Low/Fast
D to L =Manual
HoldDialine=Off
Ans Rest=LL Fail

TERMINAL OPTIONS

DTE Rate=33.6
Flow=RTS/CTS
TpDlyMin=Rx Clk

Speed Conver=On
DTR=108.1
RTS=Normal
CTS=Normal
RtsCts Delay=0
DCD=Normal
RemRTS/DCD=Codex
DCD Loss Dis=S10
DSR=Normal
Overspeed=1%
DTR Delay=S25
DTE Ct 140=Off
DTE Ct 141=Off
DTE Pin 25=Test
Ext Select=Off
Ext Cntrl=Pin 14
Inactivity=S30

TELCO OPTIONS

Telco=RJ11C
LL Tx Level=0 to –15 (see procedure)
Line Compen=Off
Speaker=Dialing
Answer=Manual
Async Echo=On
Char Length=10
V25 Char=ASCII
Sync Idle=Char
V25Resp=V25bis
Parity=V.25 bis
AT Msg=Before CD
RsltCode=Enable
RsltForm=Verbose
Con Msg=DTE Rate
Rel Msg=Off
LPDA2 Addr=FF
LPDA2 ID=326x
LPDA2 Det=Enab
Call Progress=4

FP SECURITY OPTIONS

Enter Password?
Password=Disable
Set Protection?
Change Password?

ACCESS SECURITY OPTIONS

PW Verify=Dis
Callback=Off
Rmt Num Rqrd=Off
Enter Group PW?
Group PW=Disable
Tone=None
Sim Ring=Disable
Dial Rstrct=Off

NETWORK CONTROL OPTIONS

OverrideMode=Off
NC Address=000
NC PortRate=75
Pass Thru=Opt 1
NC Line Disc=Off

Volume=Medium
Netwrk Comp=Off

DIALING OPTIONS

Pause Delay=3
Dial Wait=2
Dial=Tone
Call Timeout=60
Blind Dial=S6
Pulse Cycle=40%
Tone Length=72

REMOTE CONFIGURATION OPTIONS

Init Rmt Cnfg?
Rmt Acc=Enable

SET RMT LL ADDRESS

New Address=000
Rmt Ser=000000000
RmtNest Modem=No
'Enter' To Set

SEARCH RMT LL ADDRESS

Rmt Ser=000000000
RmtNest Modem=No
'Enter' To Srch

6.6.16 TCP OPUP DEDICATED MODEM (CODEX 3263) – PPP 14400/ASYNC SETUP PROCEDURE. APPLIES TO UD70/170A17 – A20 FOR DOD/FAA/NWS AND UD70A21 FOR NWS ONLY.

NOTE

This procedure applies to **PPP Modems Only**.

See Figure 6–21.

This procedure requires one technician and takes 0.5 hours.

6.6.16.1 Equipment and Tools Required.

1. Ameritec AM–48 Personal Transmission Test Set, as necessary (see text).

6.6.16.2 Initial Conditions/Preliminary Setup. Ensure the system is in normal operating mode. Verify modem card DIP switches are set correctly IAW Figure 6–21. At the front panel buttons (shown as they appear when facing the modem [i.e., rotated 90 degrees from the stand alone version]), perform the following functions:

Return button – when pressed within a branch of the menu, moves the LCD screen to the branch title screen (e.g., `TERMINAL OPT'S`). When pressed at a branch title screen, moves the LCD to the main screen (e.g., `DATA 14.4 T/D?` or `V32b 14.4 T/D?`).

Down button – moves from branch to branch from the main menu and selects individual setting options within the branches.

Across button – moves the screen along the branches of the modem menu tree. It also moves the cursor across data entry menus one character (or digit) at a time (e.g., S–Reg menus).

Enter button – selects the item displayed on the LCD screen as the current setting (if the screen displayed an = sign, it was already the current setting), or initiates an action (as in Reinit Memory?).

NOTE

Due to differences in modem models, some default display readings will vary between sites. Operators should carefully note desired modem settings and follow data input sequences until these settings are accomplished. (Example 1: While some modems default to a DTE Rate setting of 14.4, others default to 33.6. In the event the modem defaults to 33.6, and the desired reading is 14.4, follow button sequences until the display reading is 14.4. Example 2: While following procedures for the S–Reg, the modem may begin with S–Reg=130, or it may default to some other reading. If the desired reading is S–Reg=180, perform the button sequence until this reading is achieved).

6.6.16.3 Procedure.

1. Press the **<RETURN>** button twice (ensures beginning from the home screen).
2. Press the **<ACROSS>** button until the display reads `Reinit Memory?`
3. Press the **<ENTER>** button once. The display reads `Reinit All Mem?`
4. Press the **<ENTER>** button again. The display reads `3263 Initial`
5. Press the **<RETURN>** button. The display reads `Disconnect T/D?`
6. Press the **<ACROSS>** button until the display reads `Power Up In=Old`
7. Press the **<DOWN>** button until the display reads `Power Up In:1`
8. Press the **<ENTER>** button. The display reads `Power Up In=1`
9. Press the **<RETURN>** button. The display reads `Disconnect T/D?`
10. Press the **<DOWN>** button until the display reads `MODULATION OPT'S`
11. Press the **<ACROSS>** button. The display reads `Line=Dial`
12. Press the **<DOWN>** button until the display reads `Line:4W Lease`
13. Press the **<ENTER>** button. The display reads `Line=4W Lease`
14. Press the **<ACROSS>** button until the display reads `Min Rate=300`
15. Press the **<DOWN>** button until the display reads `Min Rate:4800`
16. Press the **<ENTER>** button. The display reads `Min Rate=4800`

17. Press the **<ACROSS>** button until the display reads `Mode=Originate`
18. Press the **<DOWN>** button. The display reads `Mode:Answer`
19. Press the **<ENTER>** button. The display reads `Mode=Answer`
20. Press the **<ACROSS>** button until the display reads `PSTN=On`
21. Press the **<DOWN>** button. The display reads `PSTN:Off`
22. Press the **<ENTER>** button. The display reads `PSTN=Off`
23. Press the **<RETURN>** button. The display reads `MODULATION OPT'S`
24. Press the **<DOWN>** button until the display reads `EC/DC OPT'S`
25. Press the **<ACROSS>** button until the display reads `Modem Flow=On`
26. Press the **<DOWN>** button until the display reads `Modem Flow:Off`
27. Press the **<ENTER>** button. The display reads `Modem Flow=Off`
28. Press the **<RETURN>** button. The display reads `EC/DC OPT'S`
29. Press the **<DOWN>** button until the display reads `ACU OPT'S`
30. Press the **<ACROSS>** button. The display reads `ACU Select=AT`
31. Press the **<DOWN>** button until the display reads `ACU Select:None`
32. Press the **<ENTER>** button. The display reads `ACU Select=None`
33. Press the **<RETURN>** button. The display reads `ACU OPT'S`
34. Press the **<DOWN>** button until the display reads `TERMINAL OPT'S`
35. Press the **<ACROSS>** button. The display reads `DTE Rate=Auto`
36. Press the **<DOWN>** button until the display reads `DTE Rate:38.4`
37. Press the **<ENTER>** button. The display reads `DTE Rate=38.4`
38. Press the **<ACROSS>** button until the display reads `Flow=XON/XOFF`
39. Press the **<DOWN>** button until the display reads `Flow:RTS/CTS`
40. Press the **<ENTER>** button. The display reads `Flow=RTS/CTS`
41. Press the **<ACROSS>** button until the display reads `DTR=High`
42. Press the **<DOWN>** button until the display reads `DTR:108.1`
43. Press the **<ENTER>** button. The display reads `DTR=108.1`
44. Press the **<ACROSS>** button until the display reads `RTS=High`

45. Press the **<DOWN>** button until the display reads `RTS:Normal`
46. Press the **<ENTER>** button. The display reads `RTS=Normal`
47. Press the **<ACROSS>** button until the display reads `CTS=AsyncSync`
48. Press the **<DOWN>** button until the display reads `CTS:Normal`
49. Press the **<ENTER>** button. The display reads `CTS=Normal`
50. Press the **<ACROSS>** button until the display reads `DCD=High`
51. Press the **<DOWN>** button until the display reads `DCD:Normal`
52. Press the **<ENTER>** button. The display reads `DCD=Normal`
53. Press the **<ACROSS>** button until the display reads `DSR=High`
54. Press the **<DOWN>** button until the display reads `DSR:Normal`
55. Press the **<ENTER>** button. The display reads `DSR=Normal`
56. Press the **<RETURN>** button. The display reads `TERMINAL OPT'S`
57. Press the **<DOWN>** button. The display reads `TELCO OPT'S`
58. Press the **<ACROSS>** button. The display reads `LL Tx Level=0`

NOTES

This item should be set to 0 dBm when the modem being set is connected to a leased line provided by the local telephone company, if so skip to step 61. Otherwise continue with this NOTE.

For zero–loss circuits, (utilized by some FAA installations) direct wire applications, and any dedicated modems without circuits connected to them, the transmit level should be set initially to –15 dBm. Use the **<DOWN>** button and the **<ENTER>** button to work toward 0 dBm to obtain a level that yields a received power level of –16 dBm ± 1 dBm into 600 Ω at the remote modem. This power level may be checked with the AM–48 test set. If the test set is not available, utilize the following (less accurate) procedure performed at the remote modem by personnel at the remote site:

a. Press the **<RETURN>** button twice (ensures beginning at the home screen).

b. Press the **<ACROSS>** button until the display reads `PhaseJitter= ___dg`

c. Press the **<DOWN>** button until the display reads
`Rx Level=____dBm`

d. Press the **<ENTER>** button once. The display still reads
`Rx Level=____dBm`

This sets **Rx Level** as the top screen of this menu. If during the setting procedure, the modem returns to the home screen (e.g., `DATA 14.4 T/D?`) pressing the **<ACROSS>** button twice will return the LCD to the **Rx Level** display. This display may be consulted to determine if the received signal level is sufficient. The value obtained by this method should be between –16 dBm and –13 dBm (this takes into account cumulative errors of measurement and display). The possible range of values that may be set in the LL Tx Level=0 menu is 0 to –15 dBm in 1 dBm steps. If needed, alter the transmit level at the local site as follows, or skip to step 61.

59. Press the **<DOWN>** button until the display reads `LL Tx Level:-15`
60. Press the **<ENTER>** button, and wait until the display reads `LL Tx Level=-15`
61. Press the **<RETURN>** button twice to return to the home screen.
62. Press the **<ACROSS>** button until the display reads `Save Changes=1`
63. Press the **<ENTER>** button, and wait until the display reads `Save Completed!`
64. Press the **<RETURN>** button twice to return to the home screen.

Menu Listing.

Following are the settings listed by function. The experienced technician may find this quicker to use than the preceding procedure. The listing may also be used as a quick reference for verifying that the modem is set up correctly. All settings that are changed from the default values of Option Set 1 are underlined.

NOTE

An item marked with an asterisk (*) may not appear on an individual modem due to firmware revision.

TEST OPTIONS

Test=End Test (unless a test is running)
Accept RDL=On
LAL Busy Out=Off

EC/DC OPTIONS

Mode=Auto Rel
Buffers=Regular *
EC=V.42
DC=Enabled

MODULATION OPTIONS

Line=4W Lease
Mod=V32bis Auto
Auto Type=CCITT
Low Speed=Bell
Max Rate=14.4
Min Rate=4800
Fast Call=Off
AdaptiveRate=On
Mode=Answer
Clock=Internal
Retrain=High BER
Longspace=Off
PSTN=Off
Guard Tone=Off

RESTORAL OPTIONS

Rest=Off
L to D=Low/Fast
D to L=Manual
HoldDialine=Off
Ans Rest=LL Fail

TERMINAL OPTIONS

DTE Rate=38.4
Flow=RTS/CTS
Speed Conver=On
DTR=108.1
RTS=Normal
CTS=Normal
RtsCts Delay=0
DCD=Normal
RemRTS/DCD=Codex
DCD Loss Dis=3s
DSR=Normal
Data Form=NRZ *
Break=Destruct
Modem Flow=Off
Delay=Off
EC ID=Default

ACU OPTIONS

ACU Select=None
AT Form=Async
V25Form=Bitsync
NoACU Form=Async
Default Dial=Off
Answer=Using S0
Async Echo=On
Char Length=10
V25 Char=ASCII
Sync Idle=Char
V25Resp=V25bis
Parity=V.25 bis
AT Msg=Before CD
RsltCode=Enable
RsltForm=Verbose
Con Msg=DTE Rate *
Rel Msg=Off *
LPDA2 Addr=FF
LPDA2 ID=326x
LPDA2 Det=Enab
Call Progress=4

DIALING OPTIONS

Pause Delay=3
Dial Wait=2
Dial=Tone
Call Timeout=60
Blind Dial=S6

Overspeed=1%
DTR Delay=S25
DTE Ct 140=Off
DTE Ct 141=Off
DTE Pin 25=Test *
Ext Select=Off
Ext Cntrl=Pin 14
Inactivity=S30

TELCO OPTIONS

Telco=RJ11C
LL Tx Level=0 or –15
Line Compen=Off *
Speaker=Dialing
Volume=Medium
Netwrk Comp=Off *

REMOTE CONFIGURATION OPTIONS

Init Rmt Cnfg?
Rmt Acc=Enable

SET REMOTE LEASED LINE ADDRESS

New Address=000
Rmt Ser#=000000
RmtNest Modem=No
'Enter' To Set

Pulse Cycle=40%
Tone Length=72

FP SECURITY OPTIONS

Enter Password?
Password=Disable
Set Protection?
Change Password?

ACCESS SECURITY OPTIONS

PW Verify=Dis
Callback=Off
Rmt Num Rqrd=Off
Enter Group PW?
Group PW=Disable
Tone=None
Sim Ring=Disable
Dial Rstrct=Off

NETWORK CONTROL OPTIONS

OverrideMode=Off
NC Address=000
NC PortRate=75
Pass Thru=Opt 1
NC Line Disc=Off*

SEARCH REMOTE LL ADDRESS

Rmt Ser#=000000
RmtNest Modem=No
'Enter' To Srch

6.6.17 MSCF DEDICATED MODEM UD70/170A21 (CODEX 3263) – 33600/ASYNC SETUP PROCEDURE. APPLIES TO FAA AND DOD ONLY.

See Figure 6–21.

This procedure requires one technician and takes 0.5 hours.

6.6.17.1 Equipment and Tools Required.

1. Ameritec AM–48 Personal Transmission Test Set, as necessary (see text).

6.6.17.2 Initial Conditions/Preliminary Setup. Ensure the system is in normal operating mode. Verify modem card DIP switches are set correctly IAW Figure 6–21. At the front panel buttons (shown as they appear when facing the rack [i.e., rotated 90 degrees from the stand alone version]), perform the following functions:

Return button – when pressed within a branch of the menu, changes the LCD to the branch title screen (e.g., `TERMINAL OPT'S`). When pressed at a branch title screen, changes the LCD to the home screen (e.g., `DATA 14.4 T/D?`).

Down button – moves from branch to branch from the main menu and selects individual setting options within the branches.

Across button – moves the screen along the branches of the modem menu tree. It also moves the cursor across data entry menus one character (or digit) at a time (e.g., S–Reg menus).

Enter button – selects the item displayed on the LCD as the current setting (if the screen displayed an = sign, it was already the current setting), or initiates an action (as in Reinit Memory?).

NOTE

Due to differences in modem models, some default display readings will vary between sites. Operators should carefully note desired modem settings and follow data input sequences until these settings are accomplished. (Example 1: While some systems default to a setting of DTE Rate of 14.4, others default to 33.6. In the event the system defaults to 33.6, and the desired reading is 14.4, follow the button sequence until the display reading is 14.4. Example 2: While following procedures for the S–Reg reading, the system may begin with S–Reg = 130 or it may default to some other reading. If the desired reading is S–Reg = 180, perform the button sequence until this reading is achieved).

6.6.17.3 Procedure.

1. Press the **<RETURN>** button twice (ensures beginning from the home screen).
2. Press the **<ACROSS>** button until the display reads `Reinit Memory?`
3. Press the **<ENTER>** button once. The display reads `Reinit All Mem?`
4. Press the **<ENTER>** button again. The display reads `3263 Fast Init`
5. Press the **<RETURN>** button. The display reads `Disconnect  T/D?`
6. Press the **<ACROSS>** button until the display reads `Power Up In=Old`
7. Press the **<DOWN>** button until the display reads `Power Up In:1`

8. Press the **<ENTER>** button. The display reads `Power Up In=1`
9. Press the **<RETURN>** button. The display reads `Disconnect  T/D?`
10. Press the **<DOWN>** button until the display reads `MODULATION OPT'S`
11. Press the **<ACROSS>** button. The display reads `Line=Dial`
12. Press the **<DOWN>** button until the display reads `Line:4W Lease`
13. Press the **<ENTER>** button. The display reads `Line=4W Lease`
14. Press the **<ACROSS>** button until the display reads `Min Rate=300`
15. Press the **<DOWN>** button until the display reads `Min Rate:4800`
16. Press the **<ENTER>** button. The display reads `Min Rate=4800`
17. Press the **<ACROSS>** button until the display reads `PSTN=On`
18. Press the **<DOWN>** button. The display reads `PSTN:Off`
19. Press the **<ENTER>** button. The display reads `PSTN=Off`
20. Press the **<RETURN>** button. The display reads `MODULATION OPT'S`
21. Press the **<DOWN>** button until the display reads `EC/DC OPT'S`
22. Press the **<ACROSS>** button until the display reads `Modem Flow=On`
23. Press the **<DOWN>** button. The display reads `Modem Flow:Off`
24. Press the **<ENTER>** button. The display reads `Modem Flow=Off`
25. Press the **<RETURN>** button. The display reads `EC/DC OPT'S`
26. Press the **<DOWN>** button until the display reads `ACU OPT'S`
27. Press the **<ACROSS>** button. The display reads `ACU Select=AT`
28. Press the **<DOWN>** button until the display reads `ACU Select:None`
29. Press the **<ENTER>** button. The display reads `ACU Select=None`
30. Press the **<RETURN>** button. The display reads `ACU OPT'S`
31. Press the **<DOWN>** button until the display reads `TERMINAL OPT'S`
32. Press the **<ACROSS>** button. The display reads `DTE Rate=Auto`
33. Press the **<DOWN>** button until the display reads `DTE Rate:115.2`
34. Press the **<ENTER>** button. The display reads `DTE Rate=115.2`
35. Press the **<ACROSS>** button. The display reads `Flow=XON/XOFF`

36. Press the **<DOWN>** button until the display reads `Flow:RTS/CTS`
37. Press the **<ENTER>** button. The display reads `Flow=RTS/CTS`
38. Press the **<ACROSS>** button until the display reads `DTR=High`
39. Press the **<DOWN>** button until the display reads `DTR:108.1`
40. Press the **<ENTER>** button. The display reads `DTR=108.1`
41. Press the **<ACROSS>** button. The display reads `RTS=High`
42. Press the **<DOWN>** button until the display reads `RTS:Normal`
43. Press the **<ENTER>** button. The display reads `RTS=Normal`
44. Press the **<ACROSS>** button. The display reads `CTS=AsyncSync`
45. Press the **<DOWN>** button until the display reads `CTS:Normal`
46. Press the **<ENTER>** button. The display reads `CTS=Normal`
47. Press the **<ACROSS>** button until the display reads `DCD=High`
48. Press the **<DOWN>** button until the display reads `DCD:Normal`
49. Press the **<ENTER>** button. The display reads `DCD=Normal`
50. Press the **<ACROSS>** button until the display reads `DCD Loss Dis=S10`
51. Press the **<DOWN>** button until the display reads `DCD Loss Dis:3S`
52. Press the **<ENTER>** button. The display reads `DCD Loss Dis=3S`
53. Press the **<ACROSS>** button. The display reads `DSR=High`
54. Press the **<DOWN>** button until the display reads `DSR:Normal`
55. Press the **<ENTER>** button. The display reads `DSR=Normal`
56. Press the **<RETURN>** button. The display reads `TERMINAL OPT'S`
57. Press the **<DOWN>** button. The display reads `TELCO OPT'S`
58. Press the **<ACROSS>** button until the display reads `LL Tx Level=0`

NOTE

This item should be set to 0 dBm when the modem being set is connected to a leased line provided by the local telephone company, if so skip to step 61. Otherwise continue with this NOTE.

For zero–loss circuits, (utilized by some FAA installations) direct wire applications, and any dedicated modems without circuits

connected to them the transmit level should be set initially to −15 dBm. Use the (**DOWN**) button and the (**ENTER**) button to work toward 0 dBm to obtain a level that yields a received power level of −16 dBm ± 1 dBm into 600 Ω at the remote modem. This power level may be checked with the AM−48 test set. If the test set is not available, utilize the following (less accurate) procedure performed at the remote modem by personnel at the remote site:

a. Press the **<RETURN>** button twice (ensures beginning from the home screen).

b. Press the **<ACROSS>** button until the display reads `PhaseJitter= ___dg`

c. Press the **<DOWN>** button until the display reads `Rx Level=____dBm`

d. Press the **<ENTER>** button once. The display still reads `Rx Level=____dBm`

This sets **Rx Level** as the top screen of this menu. If during the setting procedure, the modem returns to the home screen (e.g., `DATA 14.4 T/D?`) pressing the (**ACROSS**) button three times will return the LCD to the **Rx Level** display. This display may be consulted to determine if the received signal level is sufficient. The value obtained by this method should be between −16 dBm and −13 dBm (this takes into account cumulative errors of measurement and display). The possible range of values that may be set in the LL Tx Level=0 menu is 0 to −15 dBm in 1 dBm steps. If needed, alter the transmit level at the local site as follows, or skip to step 61.

59. Press the **<DOWN>** button until the display reads `LL Tx Level:-15`
60. Press the **<ENTER>** button. The display reads `LL Tx Level=-15`
61. Press the **<RETURN>** button twice to return to the home screen.
62. Press the **<ACROSS>** button until the display reads `Save Changes=1`
63. Press the **<ENTER>** button, and wait until the display reads `Save Completed!`
64. Press the **<RETURN>** button twice to return to the home screen.

Menu Listing.

On the following two pages are the settings listed by branch option menu. The experienced technician may find this quicker to use than the preceding procedure. The listing may also be used

as a quick reference for verifying that the modems are set up correctly. All settings that are changed from the default values are underlined.

NOTE

An item marked with an asterisk (*) may not appear on an individual modem due to firmware revision level.

TEST OPTIONS

Test = End Test (unless test is running)
Accept RDL=On
LAL Busy Out=Off

MODULATION OPTIONS

Line=4W Lease
Mod=V.34 Auto
Auto Type=CCITT
Low Speed=Bell
Max Rate=33.6
Min Rate=4800
V.34 Asym=On
Fast Call =Off
AdaptiveRate=On
Mode=Originate
Clock = Internal
Retrain=High BER
Longspace = Off
PSTN = Off
Guard Tone=Off

RESTORAL OPTIONS

Rest=Off
L to D=Low/Fast
D to L = Manual
HoldDialine=Off
Ans Rest=LL Fail

EC/DC OPTIONS

Mode=Auto Rel
Buffers=Regular *
EC = V.42
DC = Enabled
Data Form = NRZ
Break=Destruct
Modem Flow=Off
Delay=Off
EC ID=Default

ACU OPTIONS

ACU Select=None
AT Form=Async
V25Form=Bitsync
NoACU Form=Async
Default Dial=Off
Answer=Using S0
Async Echo=On
Char Length = 10
V25 Char=ASCII
Sync Idle = Char
V25Resp=V25bis
Parity=V.25 bis
AT Msg=Before CD
RsltCode=Enable
RsltForm=Verbose
Con Msg=DTE Rate *
Rel Msg=Off
LPDA2 Addr=FF

TERMINAL OPTIONS

DTE Rate = 115.2
Flow=RTS/CTS
TpDlyMin=Rx Clk
Speed Conver=On
DTR = 108.1
RTS = Normal
CTS = Normal
RtsCts Delay= 0
DCD= Normal
RemRTS/DCD= Codex
DCD Loss Dis= 3S
DSR= Normal
Overspeed = 1%
DTR Delay=S25
DTE Ct 140=Off
DTE Ct 141=Off
DTE Pin 25=Test
Ext Select=Off
Ext Cntrl=Pin 14
Inactivity=S30

TELCO OPTIONS

Telco=RJ11C
LL Tx Level=0 to –15
Line Compen=Off *
Speaker=Dialing
Volume=Medium
Netwrk Comp=Off *

SET RMT LL ADDRESS

New Address=000
Rmt Ser=000000
RmtNest Modem=No
'Enter' To Set
LPDA2 ID = 326X
LPDA2 Det=Enab
Call Progress=4

DIALING OPTIONS

Pause Delay=3
Dial Wait = 2
Dial=Tone
Call Timeout=60
Blind Dial = S6
Pulse Cycle=40%
Tone Length=72

FP SECURITY OPTIONS

Enter Password?
Password=Disable
Set Protection?
Change Password?

ACCESS SECURITY OPTIONS

PW Verify=Dis
Callback=Off
Rmt Num Rqrd=Off
Enter Group PW?
Group PW=Disable
Tone=None
Sim Ring=Disable
Dial Rstrct=Off

NETWORK CONTROL OPTIONS

OverrideMode=Off
NC Address=000
NC PortRate=75
Pass Thru=Opt 1
NC Line Disc=Off

SEARCH RMT LL ADDRESS	REMOTE CONFIGURATION OPTIONS
Rmt Ser=000000	Init Rmt Cnfg?
RmtNest Modem=No	Rmt Acc=Enable
'Enter' To Srch	

6.6.18 COMMUNICATION SERVER (PTI MPS 800) UD70A15, UD70A16, UD70A17 SETUP PROCEDURE.

This procedure requires one technician and takes 0.3 hours.

6.6.18.1 Equipment and Tools Required.

1. Copy of Local processor Hosts File.

6.6.18.2 Initial Conditions/Preliminary Setup.

1. The PTI Communication Servers UD70A15, A16, and A17 are installed and in normal operating mode located in the RPGPCA cabinet UD70.
2. For NWS and DoD sites to access the RPG processor:
   a. Depressing the **<Scroll Lock>** button twice on the keyboard will cause the CDE Login screen or the `Selection Menu` to appear on the monitor.
   b. If a CD Login screen appears, continue with this step, otherwise continue to step c. Enter **raritan<CR>** for the user (no password). The `Selection Menu` will appear on the monitor.
   c. Under normal conditions, the RPG processor is `Channel 1`, the BDDS processor is `Channel 2`, and KBD Failure is `Channel 3`.
   d. Using the ↓ and ↑ keys on the keyboard highlight the RPG channel. Press **<CR>** to invoke the selection.
3. At the RPG processor, if a CDE Login screen is displayed, login as the normal user.
4. At the Terminal window prompt, enter the following for the applicable communication server to be configured.
   a. For Communication Server A UD70A15, enter:
      tip –96ØØ /dev/cua/9<CR>
   b. For Communication Server B UD70A16, enter:
      tip –96ØØ /dev/cua/1Ø<CR>
   c. For Communication Server C UD70A17, enter:
      tip –96ØØ /dev/cua/11<CR>
5. Feedback: `connect`.

6. Continue to paragraph 6.6.18.3 to complete the configuration procedure.

6.6.18.3 Communication Server Configuration Procedure.

NOTE

In steps 1. through 4. after cycling power to the communication server, there is a 5–second time limit for the user to press the **<Space Bar>** key in order to view the configuration menu. If the time limit is not met then steps 1. through 4. must be repeated.

1. Cycle the power to the Communication Server (Off/On).

2. Feedback (example): `MPS 800 initialization complete.`
   `Begin configuration.`
   `Server enet address 00:c0:8c:08:1c:01`
   `PTI Prom Version 1.4`
   `Press <spacebar> within next 5 seconds for configuration menu.`

3. Quickly (within 5 seconds) press the **<Space Bar>** key to view the configuration menu.

4. The configuration menu appears.

5. Enter: **c<CR>** at the prompt to select the `Client's Internet Address` option.

6. Enter the RPG processor IP Address:

   a. For single channel or FAA Redundant Channel 1
   enter: **172.25.**===**.1<CR>**. Where === is the site–specific subnet ID (see hosts file).

   b. For FAA Redundant Channel 2
   enter: **172.25.**===**.71<CR>**. Where === is the site–specific subnet ID (see hosts file).

7. Enter: **q<CR>** to exit from the Client's Internet Address entry point.

8. Feedback: The configuration menu reappears.

9. Enter: **i<CR>** at the prompt to select the `Server's Internet Address` option.

10. Enter the Communication Server's IP Address, accordingly.

    a. For single channel or FAA Redundant Channel 1:

       (1) For Communication Server 1A enter: **172.25.**===**.9<CR>**. Where === is the site–specific subnet ID (see hosts file).

(2) For Communication Server 1B enter: **172.25.**===**.1Ø<CR>**. Where === is the site–specific subnet ID (see hosts file).

(3) For Communication Server 1C enter: **172.25.**===**.11<CR>**. Where === is the site–specific subnet ID (see hosts file).

b. For FAA Redundant Channel 2:

(1) For Communication Server 2A enter: **172.25.**===**.79<CR>**. Where === is the site–specific subnet ID (see hosts file).

(2) For Communication Server 2B enter: **172.25.**===**.8Ø<CR>**. Where === is the site–specific subnet ID (see hosts file).

(3) For Communication Server 2C enter: **172.25.**===**.81<CR>**. Where === is the site–specific subnet ID (see hosts file).

11. The configuration menu reappears.

12. Enter: **n<CR>** at the prompt to select the `Server's Logical Name` option.

13. Enter the Communication Server's hostname accordingly.

a. For single channel or FAA Redundant Channel 1:

(1) For Communication Server 1A enter: **mps1a<CR>**

(2) For Communication Server 1B enter: **mps1b<CR>**.

(3) For Communication Server 1C enter: **mps1c<CR>**

b. For FAA Redundant Channel 2:

(1) For Communication Server 2A enter: **mps2a<CR>**

(2) For Communication Server 2B enter: **mps2b<CR>**

(3) For Communication Server 2C enter: **mps2c<CR>**

14. The configuration menu reappears.

15. Enter: **u<CR>** at the prompt to select the `User Defined Flash Prom` option.

16. Enter: **Ø<CR>**

17. Enter: **ØØ<CR>**

18. Enter: **ØØ<CR>**

19. Enter: **AØ<CR>**

20. Enter: **DØ<CR>**

21. Enter: **q<CR>**
22. The configuration menu reappears.
23. Enter: **f<CR>** at the prompt to select the `Download Command File Pathname` option.
24. Enter: **Cmdfile.x25<CR>**
25. The configuration menu reappears.
26. Enter: **e<CR>** at the prompt to select the `Server's Line Electrical Interface` option.
27. Feedback: `Port interfaces are specified in pairs: 0 and 1, 2 and 3, etc.`
    a. Enter: **1<CR>** at the prompt.
    b. Enter: **1<CR>** at the prompt.
    c. Enter: **1<CR>** at the prompt.
    d. Enter: **1<CR>** at the prompt.
28. The configuration menu reappears.
29. Enter: **p<CR>** at the prompt to select the `Server's (Listen) Port Numbers` option.
30. Enter: **5555<CR>** at the `Enter TCP Port Number (Decimal)` prompt.
31. Enter: **<CR>** at the prompt.
32. Enter: **<CR>** at the prompt.
33. The configuration menu reappears.
34. Enter: **s<CR>** to save the configuration.
35. Feedback: `Saving Configuration...Save complete.`
36. The configuration menu reappears.
37. Enter: **x <CR>** to exit and start download. Verify that the download completes successfully (large PTI icon observed at the end of the boot process).
38. Enter: **~.** (tilde–dot) to exit the tip session, feedback is `EOT`.
39. This completes the setup procedure.

6.6.19 <u>RMS POWER ADMINISTRATOR (BAYTECH RPC–5) A UD70/170A28 AND B UD70/170A29 SETUP PROCEDURE</u>.

NOTE

This procedure is applicable to FAA Redundant Systems only.

This procedure requires one technician and takes .3 hours.

6.6.19.1 Equipment and Tools Required.

Required items for setup using a laptop computer	Required items for setup using the RPGPCA
Laptop Computer with available DB9 serial port	I/O Panel J7 Port
Windows 95 (or higher) Operating System and HyperTerminal software	Baytech Serial Cable Adapter, # 9FRJ45PC–1
Baytech Serial Cable Adapter, # 9FRJ45PC–1	RJ45 swapped pin–out cable
RJ45 swapped pin–out cable	Serial Cable # EVMBMC–0010, DB9(F)–DB25(M)
Copy of Local processor Hosts File	DB9(M) Gender Changer
	Copy of Local processor Hosts File

6.6.19.2 Initial Conditions/Preliminary Setup.

1. Using the Laptop Computer for setup: The RMS Power Administrator has AC power supplied.
2. Using the RPGPCA for setup: The RMS Power Administrator UD70/170A28 and UD70/170A29 is installed and in normal operating mode located in the RPGPCA cabinet UD70.

6.6.19.3 Procedure. If using a laptop computer to setup the RMS Power Administrator, begin at step 6.6.19.3.1. If using the RPGPCA, skip to step 6.6.19.3.2.

6.6.19.3.1 RMS Power Administrator and Laptop Computer Setup.

1. Unplug the applicable (W263 or W264) cable from the EIA232 port on the front of the RMS Power Administrator.
2. Plug the RJ45 swapped pin–out cable into the EIA232 port on the front of the RMS Power Administrator.
3. Plug the free end of the RJ45 swapped pin–out cable to the Baytech Serial Cable Adapter, # 9FRJ45PC–1
4. Plug the free end of the Baytech Serial Cable Adapter, # 9FRJ45PC–1 into the serial port of the laptop computer.

5. Power On the laptop if necessary). Bring up Windows 95 (or higher) Desktop at the laptop.

NOTE

Some of the HyperTerminal commands and window screens vary from Windows 95/98 and Windows 2000 (or higher). Use step 6.a.for laptops with Windows 95/98 or step 6.b.for laptops with Windows 2000 or higher.

6. Open HyperTerminal connection at the laptop using the appropriate step below:

   a. Laptops with Windows 95/98 Desktop, open HyperTerminal as follows:

      (1) Click **Start ▶ Programs ▶ Accessories ▶ HyperTerminal Folder**

      (2) The `HyperTerminal Folder` is opened as a window.

NOTE

If this procedure has been performed before with this laptop, double–click the **rmspwradm.ht** icon within the HyperTerminal folder and skip to step 9., otherwise continue with this step.

      (3) Double–click the **Hypertrm.exe** icon to open the program.

      (4) A `Connection Description` window appears. Click in the `Name:` block, then enter: **rmspwradm<CR>**.

      (5) A `Phone Number` window opens. Change the `Connect Using` block to **Direct to Com 1**. Click **OK** to accept. Proceed to step 7.

   b. Laptops with Windows 2000 (or higher) Desktop, open HyperTerminal as follows:

NOTE

If this procedure has been performed before with this laptop, click the **HyperTerminal w**ith a ▶ , then double–click the **rmspwradm.ht** icon and skip to step 9., otherwise continue with this step.

      (1) Click **Start ▶ Programs ▶ Accessories ▶ Communications ▶ HyperTerminal** (one shown without a ▶ for initial use or the one with a ▶ if this laptop saved a previous rmspwradm.ht setup).

      (2) A `New Connection - HyperTerminal` window appears.

      (3) A `Connection Description` window will appear. Click in the `Name:` block, then enter: **rmspwradm<CR>**

      (4) A `Connect To` window opens. Change the `Connect Using` block to **Com 1**. Click **OK** to accept. Proceed to step 7.

7. A `COM1 Properties` window opens. Using the mouse and the scroll bar as necessary to select the following port settings:

   a. `Bits per second:` **96ØØ**

   b. `Data bits:` **8**

   c. `Parity:` **None**

   d. `Stop bits:` **1**

   e. `Flow control:` **None**

   f. Click **OK** to accept.

8. Click **File ▶ Save** for the HyperTerminal File created in step 6. and 7. This creates an icon in the HyperTerminal Folder for future use. It is called `rmspwradm.ht`.

9. In the HyperTerminal window, enter: **<CR>** a few times to acquire a `Enter Selection>` prompt in the current HyperTerminal window.

10. Skip to paragraph 6.6.19.3.3 to complete the configuration procedure.

6.6.19.3.2 RMS Power Administrator and RPGPCA Setup.

1. If the RPG processor is powered off, skip to step 3. This could only be applicable if Baytech A unit was just replaced.

2. If this RPG processor is powered on, skip to step 6.

3. Disconnect the RPG processor AC plug from its source (Baytech A, Out 1) and connect the plug directly to the UPS UD70A11. Note the original outlet the RPG processor plugs into for reinstallation in step 33.d. at the end of this procedure.

4. At the back of the RPG processor turn the power switch On. Wait for the CDE login screen to continue.

5. For NWS and DoD sites to access the RPG processor:

   a. Depressing the **<Scroll Lock>** button twice on the keyboard will cause the CDE Login screen or the `Selection Menu` to appear on the monitor.

   b. If a CDE Login screen appears, continue with this step, otherwise continue to step c. Enter **raritan<CR>** for the user (no password). The `Selection Menu` will appear on the monitor.

   c. Under normal conditions, the RPG processor is `Channel 1`, the BDDS processor is `Channel 2`, and KBD Failure is `Channel 3`.

   d. Using the ↓ and ↑ keys on the keyboard highlight the RPG channel. Press **<CR>** to invoke the selection.

6. At the RPG processor, login as the normal user.

7. Unplug the applicable (70/170W263 or 70/170W264) cable from the EIA–232 port on the front of the RMS Power Administrator.

8. Plug the RJ45 swapped pin–out cable into the EIA–232 port on the front of the RMS Power Administrator.

9. Plug the free end of the RJ45 swapped pin–out cable to the Baytech Serial Cable Adapter, # 9FRJ45PC–1.

10. Plug the free end of the Baytech Serial Cable Adapter, # 9FRJ45PC–1 into the DB9(M) Gender Changer.

11. Plug the free end of the DB9(M) Gender Changer into the Serial Cable # EVMBMC–0010, DB9(F)–DB25(M).

12. Plug the free end of the Serial Cable # EVMBMC–0010, DB9(F)–DB25(M) into the I/O Panel J7 Port.

13. At a prompt in the Terminal window of the RPG processor, enter:
    tip –96ØØ /dev/cua/1<CR>

14. A `connect` feedback line appears. Enter: **<CR>** again to finish establishing the connection. A prompt should appear.

15. Continue to paragraph 6.6.19.3.3 to complete the configuration procedure.

6.6.19.3.3 RMS Power Administrator Configuration Procedure

1. At the `Enter Selection>` prompt, enter: **3<CR>** to select the `Configuration` option.

2. At the `Enter request>` prompt, enter: **1<CR>** to select the `IP Address`.

NOTE

The "A" unit UD70/170A28 is the unit installed on top of the second unit. The "B" unit UD70/170A29 is the bottom unit as installed in the RPGPCA.

3. Enter the corresponding RMS Power Administrator IP address IAW the hosts file, using the following format.

   a. Channel 1:

      (1) For Unit A, enter : **172.25.**===**.6Ø<CR>**. Where === is the site–specific subnet ID (see hosts file).

      (2) For Unit B, enter: **172.25.**===**.61<CR>**. Where === is the site–specific subnet ID (see hosts file).

b. Channel 2:

c. For Unit A, enter : **172.25.**===**.9Ø<CR>**. Where === is the site–specific subnet ID (see hosts file).

d. For Unit B, enter : **172.25.**===**.91<CR>**. Where === is the site–specific subnet ID (see hosts file).

4. At the `Enter request>` prompt, enter: **2<CR>** to select the `Subnet Mask`.
5. Enter: **255.255.255.128<CR>** for the Subnet Mask address.
6. At the `Enter request>` prompt, enter: **3<CR>** to select the `Gateway`.
7. Enter the Router IP address: **172.25.**===**.7<CR>** IAW the site hosts file. Where === is the site–specific subnet ID (see hosts file).
8. At the `Enter request>` prompt, enter: **4<CR>** to select the Unit ID.
9. For FAA redundant channel 1, enter: **rmspwradm1a** or **rmspwradm1b<CR>**
   For FAA redundant channel 2, enter: **rmspwradm2a** or **rmspwradm2b<CR>**
10. At the `Enter request>` prompt, enter: **6<CR>** to select the `Outlets`.
11. At the `Enter request>` prompt, enter: **3<CR>** to select `Name Outlets`.
12. At the `Enter request>` prompt, enter: **1<CR>** to select the `Outlet 1`.
13. The user is prompted to `Enter name for outlet number 1 (<= 16 chars)`.
14. Name the outlet IAW with the following list for the proper Baytech, then enter: **<CR>**

    - rmspwradm A
      - Outlet 1 RPG
      - Outlet 2 LAN
      - Outlet 3 Router
      - Outlet 4 Comm Server A
    - rmspwradm B
      - Outlet 1 RDA/RPG Gateway
      - Outlet 2 Not Assigned
      - Outlet 3 Comm Server B
      - Outlet 4 Comm Server C

15. Repeat step 12. through step 14. Use the appropriate menu numbers until all the assigned outlets have been named.
16. At the `Enter request>` prompt, enter: **<CR>** to return to the `Outlet Operation Configuration Menu`.
17. At the `Enter request>` prompt, enter: **5<CR>** to display outlet names, verify the outlet names are correct.
18. At the `Enter request>` prompt, enter: **<CR>** three times to return to the Configuration menu.
19. Enter: **y<CR>** at the `Accept changes?` prompt, to accept changes. The user is logged off.
20. Enter: **<CR>** 2 to 3 times log back into the `RPC-5` menu.
21. At the `RPC-5>` prompt, enter: **1<CR>** to select `Outlet Control` The summary of the outlets is displayed.
22. At the `RPC-5>` prompt, enter: **ON 1<CR>** to turn on Outlet 1.
23. At the `Confirmation` prompt, enter: **y<CR>** to confirm. Power Status changes to `On`.
24. Visually check the applicable outlet LED on the front of the RMS Power Administrator to verify the LED is lit solid green.
25. Repeat step 22. and 24. using the appropriate menu numbers until all the assigned outlets have been powered On.
26. At the `RPC-5>` prompt, enter: **logout<CR>** to exit.
27. If using a laptop to configure the RMS Power Administrator, continue to step 28. If using the RPGPCA then skip to step 30.
28. Click on the **X** in the upper–right–hand corner on both open HyperTerminal windows to shut the HyperTerminal session down.
29. Click **yes** to disconnect and **yes** to save the session, if presented with these options. Skip to step 31.
30. Enter: **~.** (tilde–dot) to exit the tip session, feedback is `EOT`.
31. Unplug the cable from the laptop (or I/O Panel J7 port) and Baytech Power Administrator that was connected at the beginning of this procedure.
32. Plug the applicable (70/170W263 or 70/170W264) cable into the EIA–232 port on the front of the RMS Power Administrator.
33. If the RPG processor was plugged into the UPS at the beginning of this procedure, (step 3. was performed) continue with this step, otherwise skip to step 34.

a. On the CDE Control Panel, click **EXIT ▶ OK** to log out of the CDE and return to the CDE Login screen.

b. Push the power button on the front of the RPG processor. There is no immediate response for approximately 50 seconds, then another 20 seconds to complete the shutdown. The system should shut down to an `OK` prompt.

c. At the back of the RPG processor turn the power switch to Off.

d. Unplug the RPG processor from the UPS outlet and connect to its original outlet from step 3.

34. If this setup procedure is being completed as part of the RMS Power Administrator Remove and Replace procedure, return to paragraph 6.5.38 to complete installation. Otherwise this completes the setup procedure.

6.6.20 MSCF PROCESSOR ASSEMBLY (SUN ULTRA 5) UD71A1 SETUP PROCEDURE.

This procedure requires one technician and takes 1.0 hour.

6.6.20.1 Equipment and Tools Required.

1. Site mnemonic.

2. System Software Distribution CD–ROM Disk.

6.6.20.2 Initial Conditions/Preliminary Setup. Ensure the MCSF processor UD71A1 is ready to have power turned On. The monitor UD71A2 is turned On. This procedure would normally be used after replacement of the MSCF processor or the MSCF processor Hard Disk.

6.6.20.3 Procedure.

1. Power On the MSCF processor. When the processor starts to boot, press the **<Stop>** and the **A** keys simultaneously. Feedback is an `OK` prompt.

2. Perform an MSCF processor full system software load beginning with step 7 of Table 4–54.

3. Reestablish the MSCF processor user accounts by completing Table 4–83.

4. When performing step 2., if a current adaptation floppy was used to restore adaptation data, then proceed to the next step. However, if current adaptation data did not exist but a current backup of Applications software is available on a Jaz disk, then the Applications software can be restored using Table 4–67. This would also restore any local customization in–place at the time the backup was made.

NOTE

The following two steps are not critical to system operation and can be delayed if critical system operations can not be impacted at

this time. Also, the backups specified in the following steps should not be performed until all Applications software, with any desired customization, is in–place, and all user accounts are in–place.

5. Complete a backup of the MSCF processor Application software using Table 4–60.
6. Complete a backup of MSCF processor User Information using Table 4–62.
7. This completes the setup procedure.

6.6.21 MSCF STAND–ALONE DEDICATED PORT MODEM (CODEX 3261 FAST) UD71A5 SETUP PROCEDURE.

This procedure requires one technician and takes 0.5 hours.

6.6.21.1 Equipment and Tools Required.

1. Ameritec AM–48 Personal Transmission Test Set, as necessary (see text).

6.6.21.2 Initial Conditions/Preliminary Setup. Ensure the system is in normal operating mode. Verify modem card DIP switches are set correctly IAW Figure 6–22. At the front panel buttons (shown as they appear when facing the modem), perform the following functions:

RETURN button – when pressed within a branch of the menu, changes the LCD to the branch title screen (e.g., `TERMINAL OPT'S`). When pressed at a branch title screen, changes the LCD to the home screen (e.g., `DATA 14.4 T/D?`).

DOWN button – moves from branch to branch from the main menu and selects individual setting options within the branches.

ACROSS button – moves the screen along the branches of the modem menu tree. It also moves the cursor across data entry menus one character (or digit) at a time (e.g., S–Reg menus).

ENTER button – selects the item displayed on the LCD as the current setting (if the screen displayed an = sign, it was already the current setting), or initiates an action (as in Reinit Memory?).

NOTE

Due to differences in modem models, some default display readings will vary between sites. Operators should carefully note desired modem settings and follow data input sequences until these settings are accomplished. (Example 1: While some systems default to a DTE Rate of 14.4, others default to 33.6. In the event the system defaults to 33.6, and the desired reading is 14.4, follow the button sequence until the display reading is 14.4. Example 2: While following procedures for the S–Reg reading, the system may begin with S–Reg = 030 or it may default to some other reading. If the desired reading is S–Reg = 180, perform the button sequence until this reading is achieved.)

6.6.21.3 Procedure.

1. Press the **<RETURN>** button twice (ensures beginning from the home screen).
2. Press the **<ACROSS>** button until the display reads `Reinit Memory?`
3. Press the **<ENTER>** button once. The display reads `Reinit All Mem?`
4. Press the **<ENTER>** button again. The display reads `3261 Fast Init`
5. Press the **<RETURN>** button. The display reads `Disconnect  T/D?`
6. Press the **<ACROSS>** button until the display reads `Power Up In=Old`
7. Press the **<DOWN>** button until the display reads `Power Up In:1`
8. Press the **<ENTER>** button. The display reads `Power Up In=1`
9. Press the **<RETURN>** button. The display reads `Disconnect  T/D?`
10. Press the **<DOWN>** button until the display reads `MODULATION OPT'S`
11. Press the **<ACROSS>** button. The display reads `Line=Dial`
12. Press the **<DOWN>** button until the display reads `Line:4W Lease`
13. Press the **<ENTER>** button. The display reads `Line=4W Lease`
14. Press the **<ACROSS>** button until the display reads `Min Rate=300`
15. Press the **<DOWN>** button until the display reads `Min Rate:4800`
16. Press the **<ENTER>** button. The display reads `Min Rate=4800`
17. Press the **<ACROSS>** button until the display reads `Mode= Originate`
18. Press the **<DOWN>** button until the display reads `Mode:Answer`
19. Press the **<ENTER>** button. The display reads `Mode=Answer`
20. Press the **<ACROSS>** button until the display reads `PSTN=On`
21. Press the **<DOWN>** button. The display reads `PSTN:Off`
22. Press the **<ENTER>** button. The display reads `PSTN=Off`
23. Press the **<RETURN>** button. The display reads `MODULATION OPT'S`
24. Press the **<DOWN>** button until the display reads `EC/DC OPT'S`
25. Press the **<ACROSS>** button. The display reads `Modem Flow=On`
26. Press the **<DOWN>** button. The display reads `Modem Flow:Off`
27. Press the **<ENTER>** button. The display reads `Modem Flow=Off`

28. Press the **<RETURN>** button. The display reads `EC/DC OPT'S`
29. Press the **<DOWN>** button until the display reads `ACU OPT'S`
30. Press the **<ACROSS>** button. The display reads `ACU Select=AT`
31. Press the **<DOWN>** button. The display reads `ACU Select:None`
32. Press the **<ENTER>** button. The display reads `ACU Select=None`
33. Press the **<RETURN>** button. The display reads `ACU OPT'S`
34. Press the **<DOWN>** button until the display reads `TERMINAL OPT'S`
35. Press the **<ACROSS>** button. The display reads `DTE Rate=Auto`
36. Press the **<DOWN>** button until the display reads `DTE Rate:115.2`
37. Press the **<ENTER>** button. The display reads `DTE Rate=115.2`
38. Press the **<ACROSS>** button. The display reads `Flow=XON/XOFF`
39. Press the **<DOWN>** button until the display reads `Flow:RTS/CTS`
40. Press the **<ENTER>** button. The display reads `Flow=RTS/CTS`
41. Press the **<ACROSS>** button. The display reads `DTR=High`
42. Press the **<DOWN>** button until the display reads `DTR:108.1`
43. Press the **<ENTER>** button. The display reads `DTR=108.1`
44. Press the **<ACROSS>** button. The display reads `RTS=High`
45. Press the **<DOWN>** button until the display reads `RTS:Normal`
46. Press the **<ENTER>** button. The display reads `RTS=Normal`
47. Press the **<ACROSS>** button. The display reads `CTS=AsyncSync`
48. Press the **<DOWN>** button until the display reads `CTS:Normal`
49. Press the **<ENTER>** button. The display reads `CTS=Normal`
50. Press the **<ACROSS>** button until the display reads `DCD=High`
51. Press the **<DOWN>** button until the display reads `DCD:Normal`
52. Press the **<ENTER>** button. The display reads `DCD=Normal`
53. Press the **<ACROSS>** button. The display reads `DCD Loss Dis=S10`
54. Press the **<DOWN>** button until the display reads `DCD Loss Dis:3S`
55. Press the **<ENTER>** button. The display reads `DCD Loss Dis=3S`

56. Press the **<ACROSS>** button. The display reads `DSR=High`
57. Press the **<DOWN>** button until the display reads `DSR:Normal`
58. Press the **<ENTER>** button. The display reads `DSR=Normal`
59. Press the **<RETURN>** button. The display reads `TERMINAL OPT'S`
60. Press the **<DOWN>** button. The display reads `TELCO OPT'S`
61. Press the **<ACROSS>** button until the display reads `LL Tx Level=0`

NOTE

This item should be set to 0 dBm when the modem being set is connected to a leased line provided by the local telephone company, if so skip to step 64. Otherwise continue with this NOTE.

For zero–loss circuits, (utilized by some FAA installations) direct wire applications, and any dedicated modems without circuits connected to them the transmit level should be set initially to –15 dBm. Use the (**DOWN**) button and the (**ENTER**) button to work toward 0 dBm to obtain a level that yields a received power level of –16 dBm ± 1 dBm into 600 Ω at the remote modem. This power level may be checked with the AM–48 test set. If the test set is not available, utilize the following (less accurate) procedure performed at the remote modem by personnel at the remote site:

a. Press the **<RETURN>** button twice (ensures beginning from the home screen).

b. Press the **<ACROSS>** button until the display reads `PhaseJitter= ___dg`

c. Press the **<DOWN>** button until the display reads `Rx Level=____dBm`

d. Press the **<ENTER>** button once. The display still reads `Rx Level=____dBm`

This sets **Rx Level** as the top screen of this menu. If during the setting procedure, the modem returns to the home screen (e.g., `DATA 14.4 T/D?`) pressing the (**ACROSS**) button twice will return the LCD to the **Rx Level** display. This display may be consulted to determine if the received signal level is sufficient. The value obtained by this method should be between –16 dBm

and –13 dBm (this takes into account cumulative errors of measurement and display). The possible range of values that may be set in the LL Tx Level=0 menu is 0 to –15 dBm in 1 dBm steps. If needed, alter the transmit level at the local site as follows, or skip to step 64.

62. Press the **<DOWN>** button until the display reads `LL Tx Level:-15`
63. Press the **<ENTER>** button. The display reads `LL Tx Level=-15`
64. Press the **<RETURN>** button twice to return to the home screen.
65. Press the **<ACROSS>** button until the display reads `Save Changes=1`
66. Press the **<ENTER>** button, and wait until the display reads `Save Completed!`
67. Press the **<RETURN>** button twice to return to the home screen.

Menu Listing.

On the following two pages are the settings listed by branch option menu. The experienced technician may find this quicker to use than the preceding procedure. The listing may also be used as a quick reference for verifying that the modems are set up correctly. All settings that are changed from the default values from Option Set 1 are underlined.

NOTE

An item marked with an asterisk (*) may not appear on an individual modem due to firmware revision level.

TEST OPTIONS

Test = End Test (unless test is running)
Accept RDL = On
LAL Busy Out = Off

MODULATION OPTIONS

Line = 4W Lease
Mod = V.34 Auto
Auto Type = CCITT
Low Speed = Bell
Max Rate = 33.6
Min Rate = 4800
V.34 Asym = On
Fast Call = Off

EC/DC OPTIONS

Mode = Auto Rel
Buffers = Regular *
EC = V.42
DC = Enabled
Data Form = NRZ
Break = Destruct
Modem Flow = Off
Delay = Off
EC ID = Default

ACU OPTIONS

ACU Select = None
AT Form = Async

AdaptiveRate = On
Mode = Answer
Clock = Internal
Retrain = High BER
Longspace = Off
PSTN = Off
Guard Tone = Off

RESTORAL OPTIONS

Rest = Off
L to D = Low/Fast
D to L = Manual
HoldDialine = Off
Ans Rest = LL Fail

TERMINAL OPTIONS

DTE Rate = 115.2
Flow = RTS/CTS
TpDlyMin = Rx Clk
Speed Conver = On
DTR = 108.1
RTS = Normal
CTS = Normal
RtsCts Delay = 0
DCD = Normal
RemRTS/DCD = Codex
DCD Loss Dis = 3S
DSR = Normal
Overspeed = 1%
DTR Delay = S25
DTE Ct 140 = Off
DTE Ct 141 = Off
DTE Pin 25 = Test
Ext Select = Off
Ext Cntrl = Pin 14
V25Form = Bitsync
NoACU Form = Async
Default Dial = Off
Answer = Using S0
Async Echo = On
Char Length = 10
V25 Char = ASCII
Sync Idle = Char
V25Resp = V25bis
Parity = V.25 bis
AT Msg = Before CD
RsltCode = Enable
RsltForm = Verbose
Con Msg = DTE Rate *
Rel Msg = Off
LPDA2 Addr = FF
LPDA2 ID = 326X
LPDA2 Det = Enab
Call Progress = 4

DIALING OPTIONS

Pause Delay = 3
Dial Wait = 2
Dial = Tone
Call Timeout = 60
Blind Dial = S6
Pulse Cycle = 40%
Tone Length = 72

FP SECURITY OPTIONS

Enter Password?
Password = Disable
Set Protection?
Change Password?

Inactivity = S30

TELCO OPTIONS

Telco = RJ11C
LL Tx Level = 0 to –15
Line Compen = Off *
Speaker = Dialing
Volume = Medium
Netwrk Comp = Off *

SET RMT LL ADDRESS

New Address = 000
Rmt Ser = 000000
RmtNest Modem = No
'Enter' To Set

SEARCH RMT LL ADDRESS

Rmt Ser = 000000
RmtNest Modem = No
'Enter' To Srch

ACCESS SECURITY OPTIONS

PW Verify = Dis
Callback = Off
Rmt Num Rqrd = Off
Enter Group PW?
Group PW = Disable
Tone = None
Sim Ring = Disable
Dial Rstrct = Off

NETWORK CONTROL OPTIONS

OverrideMode = Off
NC Address = 000
NC PortRate = 75
Pass Thru = Opt 1
NC Line Disc = Off

REMOTE CONFIGURATION OPTIONS

Init Rmt Cnfg?
Rmt Acc = Enable

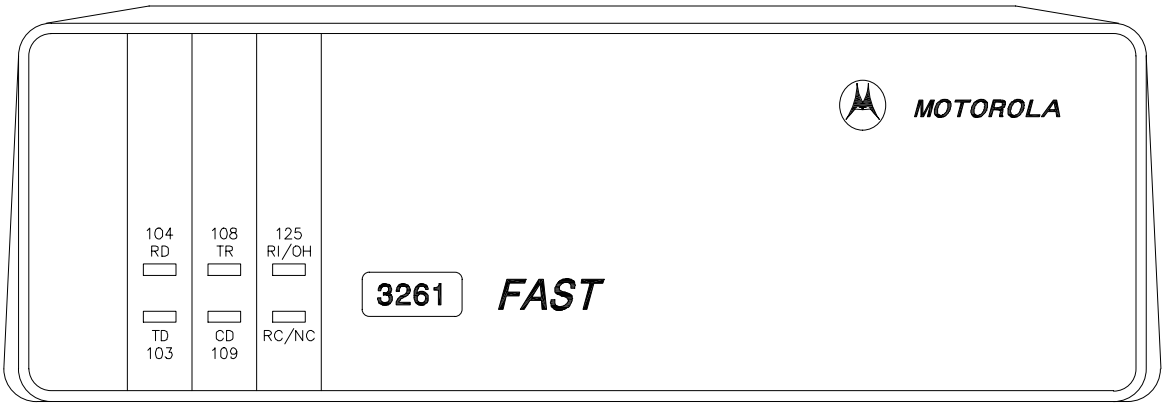

MODEM FRONT COVER (CLOSED)

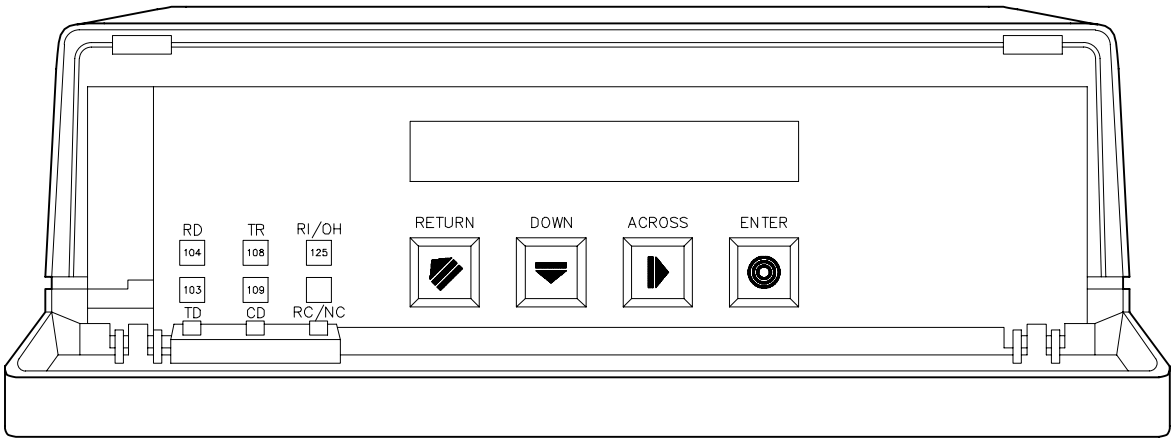

MODEM FRONT PANEL (OPEN)

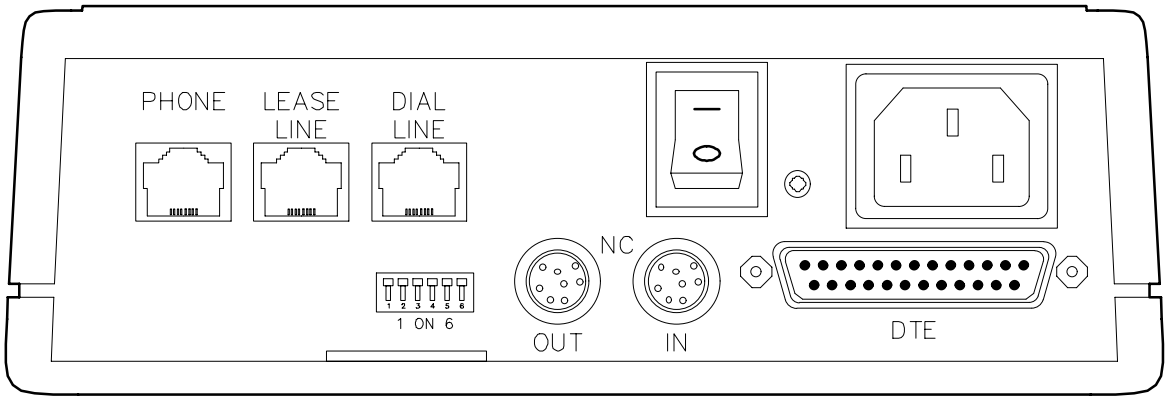

MODEM REAR PANEL LAYOUT

NX1653

Figure 6–22. MSCF Stand–Alone Dedicated Port Modem (Codex 3261 FAST) UD71A5

6.6.22 FRAME RELAY HUB ROUTER ASSEMBLY (CISCO 2621XM) UD75 SETUP PROCEDURE.

This procedure requires one technician and takes .75 hours.

6.6.22.1 Equipment and Tools Required.

Required items for setup using a laptop computer	Required items for setup using a Sun Processor
Laptop computer with available DB9 serial port	Sun processor with available DB9(M) serial port B
Windows 95 (or higher) Operating System and HyperTerminal software	Cisco Cable # 72–3383–01
Cisco Cable # 72–3383–01	Copy of Local processor Hosts File
Copy of Local processor Hosts File	

6.6.22.2 Initial Conditions/Preliminary Setup.

1. Using the laptop computer for setup: The Frame Relay Hub Router UD75 has AC power supplied.
2. Using the Sun processor for setup: The Frame Relay Hub Router UD75 is installed and connected normally to the Distant MSCF processor Configuration UD71.

6.6.22.3 Procedure. If using a laptop computer to setup the Frame Relay Hub Router, begin at paragraph 6.6.22.3.1 If using the Distant MSCF Sun Processor, skip to paragraph 6.6.22.3.2

6.6.22.3.1 Frame Relay Hub Router and Laptop Computer Setup.

1. Plug the RJ45 end of the Cisco cable (72–3383–01) into the CONSOLE port on the back of the Cisco 2621XM Frame Relay Hub Router.
2. Plug the other end of the Cisco cable into the 9–pin serial port of the laptop computer.
3. Power On the laptop (if necessary). Bring up the Windows 95 (or higher) Desktop at the laptop.

NOTE

Some of the HyperTerminal commands and window screens vary from Windows 95/98 and Windows 2000 (or higher). Use steps 4.a. for laptops with Windows 95/98 or step 4.b. for laptops with Windows 2000 or higher.

4. Open a HyperTerminal connection at the laptop using the appropriate step below:
   a. Laptops with Windows 95/98 Desktop, open HyperTerminal as follows:

(1) Click **Start ▶ Programs ▶ Accessories ▶ HyperTerminal Folder**

(2) The `HyperTerminal Folder` is opened as a window.

NOTE

If this procedure has been performed before with this laptop, double–click the **hub–rtr.ht** icon and skip to step 7., otherwise continue with this step.

(3) Double–click the **Hypertrm.exe** icon to open the program.

(4) A `Connection Description` window will appear. Click in the `Name Block,` then enter: **hub–rtr<CR>**

(5) A `Phone Number` window opens. Change the `Connect Using` block to **Direct to Com 1**. Click **OK** to accept. Proceed to step 5.

b. Laptops with Windows 2000 (or higher) Desktop, open HyperTerminal as follows:

NOTE

If this procedure has been performed before with this laptop, click the **HyperTerminal** with a ▶, then double–click the **hub–rtr.ht** icon and skip to step 7., otherwise continue with this step.

(1) Click **Start ▶ Programs ▶ Accessories ▶ Communications ▶ HyperTerminal** (one shown without a ▶ for initial use or the one with a ▶ if this laptop saved a previous hub–rtr.ht setup)

(2) A `New Connection - HyperTerminal` window appears.

(3) A `Connection Description` window will appear. Click in the `Name:` block, then enter: **hub–rtr.<CR>**

(4) A `Connect To` window opens. Change the `Connect Using` block to **Com 1**. Click **OK** to accept. Proceed to step 5.

5. A `COM1 Properties` window opens. Use the mouse and the scroll bar as necessary to select the following port settings:

a. `Bits per second:` **96ØØ**

b. `Data bits:` **8**

c. `Parity:` **None**

d. `Stop bits:` **2**

e. `Flow control:` **None**

f. Click **OK** to accept.

6. Click **File ▶ Save** for the HyperTerminal file created in steps 4. and 5. This will create an icon in the HyperTerminal folder for future use. It is called `hub-rtr.ht.`

7. In the HyperTerminal window, enter: **<CR>** several times to establish the connection. A prompt should appear.

8. Skip to paragraph 6.6.22.3.3 to complete the configuration procedure.

6.6.22.3.2 Frame Relay Hub Router and Distant MSCF Sun Processor Setup.

1. Plug the RJ45 end of the Cisco cable (72–3383–01) into the CONSOLE port at the back of the Cisco 2621XM Frame Relay Hub Router.

2. Plug the other end of the Cisco cable into the 9–pin serial port B at the back of the Distant MSCF Sun Processor.

3. In a terminal window of the Distant MSCF processor, enter: **su<CR>** and then the *root-password*<**CR>** to become the Superuser.

4. Enter: **admintool&<CR>** to open up the system Admintool.

5. In the `Admintool:Users` window, click **Browse ▶ Serial Ports** to open up serial port list (`Admintool:Serial Ports`).

6. Double–click on the Port "b" line to open it.

7. Click the **Service Enable check block** to deselect the Service (no check mark) and then click **Apply.** Leave this window open for use at the end of the procedure.

8. Click in the Terminal window and at the # prompt, enter:
tip –96ØØ /dev/cua/b<CR>

9. If the message `all ports busy` appears, continue to step 10. If a `connected` feedback line appears, skip to step 11.

10. When the feedback `all ports busy` is received, it indicates the last session with the Distant MSCF Sun processor was not completed correctly, this error message must be cleared to continue.

    a. Disconnect serial cable from serial B of the Distant MSCF Sun processor.

    b. In the `Admintool:Serial Ports` box:

        (1) Click on serial port b to highlight serial port "b".

        (2) Click on **Edit ▶ Delete** to delete serial port "b" configuration. Confirm deletion.

        (3) Serial Port "b" now is configured as `< no service >`

c. In the Terminal window:

(1) At the # prompt, enter: **tip –96ØØ /dev/cua/b<CR>**

(2) Feedback will read `connected.`

d. In the `Admintool:Users` box:

(1) Double–click on serial port "b". A `Modify Serial Port Menu` box opens.

(2) Click on the **Expert** option from the `Detail` options.

(3) Click on the current **Template** option.

(4) A menu of possible selection will appear, click **Terminal – Hardwired** to select it as the template option.

(5) Click the **Service Enable check block** to deselect the Service (no check mark) and then click **Apply.**

(6) Serial Port "b" is now displayed as a configured port. (i.e., no longer reads `< no service >`) Leave Admintool open for use at the end of this procedure.

e. Reconnect the serial cable to port B of the Distant MSCF Sun processor.

NOTE

For some devices, reconnecting the serial cable may terminate the tip session. If so, reenter: **tip –96ØØ /dev/cua/b<CR>** in the terminal to reestablish the connection.

11. A `connected` feedback line appears. Enter: **<CR>** again to finish establishing the connection. A prompt should appear.

12. Continue to paragraph 6.6.22.3.3 to complete the configuration procedure.

6.6.22.3.3 Frame Relay Hub Router Configuration Procedure.

NOTE

For initial configurations a `Router>` prompt appears. A `FRhub`*`WFO`*`>` prompt will appear if this is not the initial configuration of the Frame Relay Hub Router. (*WFO* represents your AWIPS forecast office site ID.)

1. This step uploads a default Initial Operating System (IOS) into the Frame Relay Hub Router. If this Frame Relay Hub Router is being reconfigured (not an initial configuration), proceed. Otherwise, skip to step 3.

NOTE

The Router will automatically boot to the step 3. prompt for an initial configuration. However, if this step is skipped at this time,

it is required that the procedure be restarted from step 1.i. after the initial configuration parameters are entered (steps 3. through step 9.).

a. If prompted, enter: *site–selected–password.* If this is a new box that may have been previously tested by NRC, it will either have no password set for the CONSOLE port or will use a default password of **cisco.**

b. Enter: **enable<CR>** at the `FRhub`*`WFO`*`>` prompt.

c. Enter: *site–selected–password***<CR>.** If this is a new unit that may have been previously tested by NRC, it will either have no password set or it will use a default password of **cisco.**

d. At the `FRhub`*`WFO#`* prompt, enter: **erase startup–config<CR>**

e. Feedback: `Erasing the nvram filesystem will remove all configuration files ! Continue? [confirm]`

f. Enter: **<CR>.** No immediate feedback observed for about 15 seconds.

g. Feedback: `[OK]. Erase of nvram: complete.` The `FRhub`*`WFO#`* prompt reappears.

h. Cycle power to the router by manually turning the power switch Off. Wait at least one minute and turn the power switch On. After the router boots, proceed to step 3. After completion of step 3. through 9., this procedure will be restarted beginning with step 1.i.

i. Enter: **copy tftp://172.25.===.2Ø/c26ØØXM.bin flash:<CR>**. The IP–Address is the Distant MSCF processor IP–Address and === is the site–specific subnet number. Enter the correct subnet using the Distant MSCF processor hosts file.

j. Feedback: `Destination filename [c2600XM.bin]?.`

k. Enter: **<CR>**

l. If the observed Feedback is: `There is a file already existing with this name. Do you want to over write? [confirm]`, continue with step m, otherwise skip to step n.

m. Enter: **<CR>**

n. Feedback: `Accessing tftp://172.25.===.20/c2600XM.bin...`
`Erase flash: before copying? [confirm]`
Where === is the site–specific subnet number.

NOTE

If the observed feedback indicates that there is insufficient storage space available for the new file, then enter **erase flash:<CR>** and then return to step 1.i. to copy in the new file.

o. Enter: **<CR>**

p. Feedback: `Erasing the flash filesystem will remove all files! Continue? [confirm]`

q. Enter: **<CR>**. Wait for approximately 30 seconds while older file is erased and new file loads.

CAUTION

The operating system file has just been erased and it is critical that the new operating system correctly loads into flash. **DO NOT** cycle power to the router unless the new file is correctly loaded as indicated by the checksum verification message in the next step. If the checksum verification message is not received, steps i. through r. must be repeated. Carefully verify step i. entries and ensure the Distant MSCF processor is operating since the file is uploaded from the Distant MSCF processor.

r. Ensure the `Verifying checkum...OK` message appears followed by the `Router#` or `FRhub`*`WFO#`* prompt.

s. Cycle power to the Frame Relay Hub Router by manually turning the power switch Off/On.

2. Once the Frame Relay Hub Router powers up, it reloads the default software (approximately a 1–1/2 minute wait). When complete, the last line of feedback states: `--- System Configuration Dialog ---.`

NOTE

Steps 3. through 6. may not be necessary, depending on the configuration state of the router. If the prompt below does not appear, the router has already been configured, skip to step 7.

3. Feedback: `Would you like to enter initial configuration dialog? [yes/no]:`

4. Enter: **n<CR>**

5. Feedback: `Would you like to terminate autoinstall? [yes]:`

6. Enter: **y<CR>**

NOTE

Throughout this procedure, the router state is changed and feedback messages are presented while the user is trying to complete entries. To return to an entry prompt, press **<CR>**.

7. Feedback: `Press RETURN to get started!` Numerous state change messages will be noted at this time. Wait approximately 30 seconds until the messages stop displaying before continuing.

8. Enter: **<CR>**. The `Router>` prompt appears.

9. Configure the Ethernet port:

   a. Enter: **enable<CR>**. The prompt changes to `Router#`.

   b. Enter: **config t<CR>**

   c. Feedback: `Enter configuration commands, one per line. End with CNTL/Z.` The prompt changes to `Router (config)#`.

   d. This step is specific to the type of distant radar the frame relay hub router is supporting. If the hub router is supporting a DoD or FAA radar, enter the following as appropriate.

      For DoD radar, enter: **int Ethernet 1/1<CR>**
      For FAA radar, enter: **int Ethernet 1/Ø<CR>**

      Feedback: `Router(config-if)#` prompt.

   e. Enter the following using the hosts file to complete the Frame Relay Hub Router IP–Address at the `Router(config-if)#` prompt:

      (1) **ip address 172.25.===.1ØØ 255.255.255.128<CR>**
      Where === is the site–specific subnet ID (see hosts file).

      (2) **bridge–group 1<CR>**

      (3) **no shutdown<CR>**

   f. Enter: **end<CR>.** After feedback enter: **<CR>** again to return to the `Router#` prompt.

   g. Feedback: `Configured from console by console.`

   h. Enter: **<CR>**

   i. Enter: **write mem<CR>** to save the entries.

   j. Feedback: `Building configuration...`
      `[OK]`

NOTE

If steps 1.i. through 1.s. were initially skipped, the procedure must now be restarted and completed again beginning with step 1.i. Return to step 10. upon completion of step 1.s.

10. Upload configuration file.

a. Enter: **copy tftp running–config<CR>** at the `Router#` prompt.

b. Feedback: `Address or name of remote host [172.25.===.20]?`.

c. Enter: **172.25.===.2Ø<CR>**. Where === is the site specific subnet ID (see hosts file). If IP–address displayed in step b is correct, press **<CR>**.

d. Feedback: `Source filename [c2600XM.bin]?`

e. Enter: **hub–template<CR>**

f. Feedback: `Destination filename [running-config]?`

g. Enter: **<CR>**

h. The Frame Relay Hub Router proceeds with the upload (approximately a 1–1/2 to 2 minute wait). Error messages noted for non–installed modules are normal. Also, link state change messages may be noted. When complete, a `FRhub`*`WFO`*`#` prompt appears (may need to enter: **<CR>** to return to the prompt).

11. Make the following changes to the Frame Relay Hub Router configuration as follows:

a. At the `FRhub`*`WFO`*`#` prompt, enter:
sh run int fØ/Ø | include 165<CR>
Feedback: A list of IP–addresses.
Record the IP–address for 165.92._____._____

NOTE

You will need the third and fourth octets of the AWIPS IP–address (165.92) to enter in place of xxx and yyy in step e. below.

b. At the `FRhub`*`WFO`*`#` prompt, enter: **config t<CR>**
Feedback: `FRhub`*`WFO`*`(config)#` prompt will appear.

c. At the `FRhub`*`WFO`*`(config)#` prompt, enter: **int fØ/Ø<CR>**
Feedback: `FRhub`*`WFO`*`(config-if)#` prompt will appear.

d. At the `FRhub`*`WFO`*`(config-if)#` prompt, enter: **no ip address<CR>**

e. At the `FRhub`*`WFO`*`(config-if)#` prompt, enter:
ip address 165.92.xxx.yyy 255.255.255.128<CR>

f. At the `FRhub`*`WFO`*`(config-if)#` prompt, enter: **end<CR>**
Feedback: A `FRhub`*`WFO`*`#` prompt will appear.

12. Make the following entries to setup the site–specific passwords.

NOTE

Throughout step 12. several passwords are assigned for the Frame Relay Hub Router's various ports.

a. Enter: **config t<CR>**. The prompt changes to `FRhub`*`WFO`*`(config)#`

b. Enter: **no enable password<CR>**

c. Enter: **no enable secret<CR>**

d. Enter: **service password–encryption<CR>**

e. Enter: **enable password** *site–selected–password***<CR>**. Make mental note of the password for future use.

f. Enter: **line vty Ø 4<CR>**

g. Enter: **login<CR>**

h. Enter: **password** *site–selected–password***<CR>**. Make note of the password for future use.

i. Enter: **line con Ø<CR>**

j. Enter: **login<CR>**

k. Enter: **password** *site–selected–password***<CR>**. Make note of the password for future use.

l. Enter: **line aux Ø<CR>**

m. Enter: **login<CR>**

n. Enter: **password** *site–selected–password***<CR>.** Make note of the password for future use.

o. Enter: **exit<CR>**

p. Enter: **no service password–encryption<CR>**

q. Enter: **end<CR>**

r. Feedback: `Configured from console by console.`

s. Enter: **<CR>**

t. Enter: **write mem<CR>** to save the entries. Wait until the `FRhub`*`WFO#`* prompt appears before proceeding.

13. At the `FRhub`*`WFO#`* prompt, enter: **exit<CR>**

14. If using a laptop to configure the Frame Relay Hub Router, continue to step 15. If using the Distant MSCF Sun processor, then skip to step 17.

15. Click on the **X** in the upper–right–hand corner on both open HyperTerminal windows to shut the HyperTerminal session down.

16. Click **yes** to disconnect and **yes** to save the session, if presented with these options. Skip to step 21.

17. In the `Admintool:Modify Serial Port` window, click the **Service Enable check block** to select the Service (has check mark) and then click **OK.**

18. Close the `Admintool:Serial Ports` window by clicking **File ▶ Exit**

19. In the Terminal window, enter: **~.** (tilde dot) to exit the tip session, feedback is `EOT.`

20. Enter: **exit<CR>** to end Superuser session and return to the normal user prompt.

21. Unplug the cable that was connected at the beginning of this procedure from the laptop (or Distant MSCF Sun processor) and Frame Relay Hub Router.

22. This completes the setup procedure.

6.6.23 MSCF COLOR PRINTER (XEROX/TEKTRONIX PHASER 750) UD79A1 SETUP PROCEDURE.

This procedure requires two technician and takes 0.5 hours.

6.6.23.1 Equipment and Tools Required.

NOTE

If Frame Relay is installed, you must use a copy of the Distant MSCF Hosts file. If Frame Relay is not installed, use a copy of your local processor Hosts file.

1. Copy of Local processor Hosts File or Distant MSCF Hosts file (see NOTE above) that contains the IP–address for the printer. Or the IP–address can be obtained from an MSCF Terminal window by entering: **:cat etc/hosts | grep printer<Return>**

   Feedback: `172.25.= = =.21,` where `= = =` will the site specific third octet number of the IP–address.

6.6.23.2 Initial Conditions/Preliminary Setup.

The power–up sequence is complete. The green indicator is On steady, the amber indicator is Off, and the front panel message reads `Ready`.

6.6.23.3 Procedure.

1. Print a Menu Map to provide a guide to the front panel menus. Keep a copy by the printer for easy reference.

   a. On the printer's front panel, press the **Menu** button, `Menu Maps` appears.

b. Press the **Print** button. It may take 3 to 4 minutes while the printer warms up. Wait for the Printer Menu Map to print. The front panel reads `Ready` when printing is complete.

2. Setting the IP Parameters. (Use the Printer Menu Map from step 1. for reference.)

   a. Press the **Menu** button, `Menu Maps` appears.

   b. Press either scroll button, (**---->** or **<----**), until the front panel displays `Configuration`.

   c. Press the **Menu** button, `Configuration Page` appears on the front panel.

      (1) Press either scroll button (**---->** or **<----**), until the front panel displays `Startup Page.`

      (2) Press the **Menu** button. Verify `On` is displayed. If `Off` is displayed, press either scroll button to select `On.`

      (3) Press the **OK** button. Display returns to `Startup Page.`

   d. Press either scroll button, (**---->** or **<----**), until the front panel displays `Network Settings`.

   e. Press the **Menu** button twice, `Interface` appears on the front panel.

   f. Setting the TCP/IP–Address. The hosts file is required to complete this procedure.

      (1) Press the scroll forward button, (**---->**) to display `TCP/IP Address`.

      (2) Press the **Select** button to display the TCP/IP–address.

      (3) Press the plus (**+**) button to set the left–most digit of the address to **1**.

      (4) Press the scroll forward button (**---->**) to advance to the next digit. Press plus (**+**) button until the digit is set to **7**.

      (5) To set the remaining digits, use the scroll forward button (**---->**) and the plus (**+**) button as described in step (4).

      (6) When complete, the TCP/IP–address reads **172.Ø25.**===**.Ø21**. Where === is the third octet is the site specific subnet and is obtained from the hosts file. Each octet must be 3 digits, precede with a 0 when necessary.

      (7) When the TCP/IP–address is set correctly, press the **Set** button to enter the setting into the printer. The front panel displays: `Confirm Selection`.

      (8) Press the **Confirm** button, the front panel briefly displays `Selected`, then returns to `TCP/IP Address`. The TCP/IP–Address is now set in the printer.

g. Setting the Network Mask address.

(1) On the front panel, `TCP/IP Address`. still appears.

(2) Press the scroll forward button, (**----->**) to display `Network Mask`.

(3) Press the **Select** button to display the current Network Mask address.

(4) Press the plus (**+**) button until the left–most digit of the Network Mask address is set to **2**.

(5) Press the scroll forward button (**----->**) to advance to the next digit. Press the plus (**+**) button until the digit is set to **5**.

(6) To set the remaining digits, use the scroll forward button (**----->**) and the plus (**+**) button as described in step (5).

(7) When complete, the Network Mask address reads `255.255.255.128`.

(8) When the Network Mask address is set correctly, press the **Set** button to enter the setting into the printer. The front panel displays: `Confirm Selection`.

(9) Press the **Confirm** button. The front panel briefly displays `Selected`, then returns to `Network Mask`. The Network Mask address is now set in the printer.

h. Setting the Gateway address. The hosts file is required to complete this procedure. Although titled the Gateway address, the user will be entering the address for the Router.

(1) On the front panel, `Network Mask` still appears.

(2) Press the scroll forward button, (**----->**) to display `Gateway Address`.

(3) Press the **Select** button to display the current Gateway address.

(4) Press the plus (**+**) button to set the left–most digit of the Gateway address to **1**.

(5) Press the scroll forward button (**----->**) to advance to the next digit. Press the plus (**+**) button until the digit is set to **7**.

(6) To set the remaining digits, use the scroll forward button (**----->**) and the (**+**) button as described in step (5).

(7) If Frame Relay service is not used, the Gateway address reads **172.Ø25.**===**.ØØ7**, where === is the site specific subnet and can be obtained from the hosts file. Each octet must be 3 digits, precede with a **Ø** if necessary.

(8) If Frame Relay service is used, the Gateway address reads **172.Ø25.**===**.1ØØ**, where === is the site specific subnet and can be

obtained from the hosts file. Each octet must be 3 digits, precede with a **Ø** if necessary.

(9) When the Gateway address is set correctly, press the **Set** button to enter the setting into the printer. The front panel displays: `Confirm Selection`.

(10) Press the **Confirm** button. The front panel briefly displays `Selected`, then returns to `Gateway Address`. The Gateway address is now set in the printer.

i. Return the printer to normal operations.

(1) On the front panel, `Gateway Address` still appears.

(2) Press the **Exit** button (4 times) until the front panel displays `Reset Printer`. The **Exit** button is the left–most button on the front panel.

(3) The user is prompted to reset the printer. Press the **Reset** button.

(4) After approximately 2 minutes, the printer is reset and the front panel displays `Ready`. A printout of the current setting is made.

(5) Ensure the settings for the TCP/IP Section of the printout correspond to the information entered in this setup procedure. If not, repeat procedure.

j. Confirm the MSCF processor can detect the Printer. At locations where multiple distant MSCFs are supported, confirm each MSCF processor can detect the printer.

NOTE

This section assumes the Color Printer is connected with the MSCF processor UD71A1 with an ethernet LAN Switch connection. The user is logged into the CDE Desktop of the MSCF processor.

(1) Open a terminal window at the MSCF processor, if necessary.

(2) Enter: **ping –s printer<CR>** in the terminal window.

(3) Feedback: `64 bytes from printer...`

(4) Once the system is sending back data bits, execute a **<Ctrl> C** to halt the ping execution.

(5) Repeat steps (1) through (4) for each MSCF processor.

3. This completes the setup procedure.

CHAPTER 7

REFERENCE DATA

Section 7.1. Introduction, Systems Interface and Interconnection Cabling Diagrams (ICDs)

NOTE

This chapter and its corresponding sections refer to the RPGPCA as UD70. Unless otherwise specified for FAA redundant systems, this information also applies to RPGPCA UD170.

7.1.1 GENERAL.

Chapter 7 contains system interface diagrams, interconnection cabling diagrams, cable wiring data, and power distribution diagrams. The data in this chapter is provided to support wiring and cable troubleshooting by means of point–to–point continuity testing. This chapter contains information for several configurations; therefore, not all information is applicable.

7.1.2 CHAPTER ORGANIZATION.

Chapter 7 is organized into three sections as follows:

- Section 7.1 Introduction, System Interface Diagrams and Interconnection Cabling Diagrams (ICDs)
- Section 7.2 Cable Wiring Data
- Section 7.3 UD70/170 Narrowband Communication ICD Tables

7.1.3 INTERCONNECTION CABLING DIAGRAMS.

This section provides System Interface Diagrams and Interconnection Cabling Diagrams ICDs. Detailed cabling information for the ICDs can be found in Section 7.2, Table 7–1.

The following Figures are provided in this section:

- Figure FO7–1 WSR–88D System Communications, Interface Diagram (5 sheets)
- Figure FO7–2 WSR–88D MSCF System Interconnectivity (3 sheets)
- Figure FO7–3 RPGPCA Data Cables, NWS UD70 (2 sheets)
- Figure FO7–4 RPGPCA Data Cables, DoD UD70 (2 sheets)
- Figure FO7–5 RPGPCA Data Cables, FAA UD70/170 (2 sheets)
- Figure FO7–6 MSCF Group Assembly Power Distribution

- Figure FO7–7 NWS Redundant Remote RDA Maintenance Terminal Power Distribution
- Figure FO7–8 RPG Processor/Communications Assembly UD70 Power Distribution (NWS and DoD)
- Figure FO7–9 RPG Processor/Communications Assembly UD70/170 Power Distribution (FAA Redundant)

Section 7.2. Cable Wiring Data

NOTE

This chapter and its corresponding sections refer to the RPGPCA as UD70. Unless otherwise specified for FAA redundant systems, this information also applies to RPGPCA UD170.

7.2.1 GENERAL.

This section provides point–to–point from/to wiring data for all multi–conductor cables. The data is provided in Table 7–1 and is organized by the cable reference designation number (e.g., “W3” or “70/170W3”).

Table 7–1. Running Wire List

Conductor		FROM	TO
No.	**Aux.**		
		W9/109 ***	
		UD70/170 FL1J1 (P1)	208 VAC/3PH
1		P1–A	PH(A)
2		P1–B	PH(B)
3		P1–C	PH(C)
4		P1–D	GND
5		P1–E	(N)
		W36/136 ***	
		UD70/170 J19 (P1)	UD5/105 J11 (P2)
1	1	P1–1	P2–10
2	2	P1–9	P2–2
	A	SHLD	E101
	B	SHLD	E102
2	1	P1–2	P2–9
2	2	P1–10	P2–1
	A	SHLD	E103
	B	SHLD	E104
3	1		
3	2		
	SHLD		
4		E101	E103

* NWS Systems Only
** FAA Redundant Systems Only
*** DoD and FAA Redundant Systems Only
**** DoD Systems Only
***** FAA Redundant Systems and NWS Redundant Systems Only
****** NWS Systems and DoD Systems Only

Table 7–1. Running Wire List – Continued

Conductor No.	Conductor Aux.	FROM	TO
		W36/136 ***	
		UD70/170 J19 (P1)	UD5/105 J11 (P2)
5		E102	E104
6		E103	P1–5
7		E104	P2–5
		W37 ***	
		UD5 J11 (P1)	UD1A26 LOAD
1	1	P1–1	A1 LOAD–1
1	2	P1–9	A1 LOAD–2
	A	SHLD	N/C
	B	SHLD	E101
3	1	N/C	N/C
3	2	N/C	N/C
SHLD		SHLD	P1–GND
		E101	A1 LOAD–GND
		W44 **	
		UD31 J14 (P1)	TB2–LEASED LINES (P2)
1	1	P1–1	P2–1
1	2	P1–26	P2–26
2	1	P1–2	P2–2
2	2	P1–27	P2–27
3	1	P1–3	P2–3
3	2	P1–28	P2–28
4	1	P1–4	P2–4
4	2	P1–29	P2–29
5	1	P1–5	P2–5
5	2	P1–30	P2–30
6	1	P1–6	P2–6
6	2	P1–31	P2–31
7	1	P1–7	P2–7
7	2	P1–32	P2–32
8	1	P1–8	P2–8
8	2	P1–33	P2–33

* NWS Systems Only
** FAA Redundant Systems Only
*** DoD and FAA Redundant Systems Only
**** DoD Systems Only
***** FAA Redundant Systems and NWS Redundant Systems Only
****** NWS Systems and DoD Systems Only

Table 7–1. Running Wire List – Continued

Conductor No.	Conductor Aux.	FROM	TO
		W44 **	
		UD31 J14 (P1)	TB2–LEASED LINES (P2)
9	1	P1–9	P2–9
9	2	P1–34	P2–34
10	1	P1–10	P2–10
10	2	P1–35	P2–35
11	1	P1–11	P2–11
11	2	P1–36	P2–36
12	1	P1–12	P2–12
12	2	P1–37	P2–37
13	1	P1–13	P2–13
13	2	P1–38	P2–38
14	1	P1–14	P2–14
14	2	P1–39	P2–39
15	1	P1–15	P2–15
15	2	P1–40	P2–40
16	1	P1–16	P2–16
16	2	P1–41	P2–41
17	1	P1–17	P2–17
17	2	P1–42	P2–42
18	1	P1–18	P2–18
18	2	P1–43	P2–43
19	1	P1–19	P2–19
19	2	P1–44	P2–44
20	1	P1–20	P2–20
20	2	P1–45	P2–45
21	1	P1–21	P2–21
21	2	P1–46	P2–46
22	1	P1–22	P2–22
22	2	P1–47	P2–47
23	1	P1–23	P2–23
23	2	P1–48	P2–48
24	1	P1–24	P2–24
24	2	P1–49	P2–49
25	1	P1–25	P2–25

* NWS Systems Only
** FAA Redundant Systems Only
*** DoD and FAA Redundant Systems Only
**** DoD Systems Only
***** FAA Redundant Systems and NWS Redundant Systems Only
******NWS Systems and DoD Systems Only

Table 7–1. Running Wire List – Continued

Conductor No.	Conductor Aux.	FROM	TO
		W44 **	
		UD31 J14 (P1)	TB2–LEASED LINES (P2)
25	2	P1–50	P2–50
SHLD		P1–GND	P2–GND
SHLD	A	SHLD	SHLD
26		E101	E101
		W44 ****	
		UD70 J1 (P1)	LEASED LINES (P2)
1	1	P1–1	P2–1
1	2	P1–26	P2–26
2	1	P1–2	P2–2
2	2	P1–27	P2–27
3	1	P1–3	P2–3
3	2	P1–28	P2–28
4	1	P1–4	P2–4
4	2	P1–29	P2–29
5	1	P1–5	P2–5
5	2	P1–30	P2–30
6	1	P1–6	P2–6
6	2	P1–31	P2–31
7	1	P1–7	P2–7
7	2	P1–32	P2–32
8	1	P1–8	P2–8
8	2	P1–33	P2–33
9	1	P1–9	P2–9
9	2	P1–34	P2–34
10	1	P1–10	P2–10
10	2	P1–35	P2–35
11	1	P1–11	P2–11
11	2	P1–36	P2–36
12	1	P1–12	P2–12
12	2	P1–37	P2–37
13	1	P1–13	P2–13
13	2	P1–38	P2–38

* NWS Systems Only
** FAA Redundant Systems Only
*** DoD and FAA Redundant Systems Only
**** DoD Systems Only
***** FAA Redundant Systems and NWS Redundant Systems Only
****** NWS Systems and DoD Systems Only

Table 7–1. Running Wire List – Continued

Conductor No.	Conductor Aux.	FROM	TO
		W44 ****	
		UD70 J1 (P1)	LEASED LINES (P2)
14	1	P1–14	P2–14
14	2	P1–39	P2–39
15	1	P1–15	P2–15
15	2	P1–40	P2–40
16	1	P1–16	P2–16
16	2	P1–41	P2–41
17	1	P1–17	P2–17
17	2	P1–42	P2–42
18	1	P1–18	P2–18
18	2	P1–43	P2–43
19	1	P1–19	P2–19
19	2	P1–44	P2–44
20	1	P1–20	P2–20
20	2	P1–45	P2–45
21	1	P1–21	P2–21
21	2	P1–46	P2–46
22	1	P1–22	P2–22
22	2	P1–47	P2–47
23	1	P1–23	P2–23
23	2	P1–48	P2–48
24	1	P1–24	P2–24
24	2	P1–49	P2–49
25	1	P1–25	P2–25
25	2	P1–50	P2–50
SHLD		P1–GND	P2–GND
SHLD	A	SHLD	SHLD
26		E101	E101
		W45 **	
		UD31 J15 (P1)	TB1–DIAL LINES (P2)
1	1	P1–1	P2–1
1	2	P1–26	P2–26
2	1	P1–2	P2–2
2	2	P1–27	P2–27

* NWS Systems Only
** FAA Redundant Systems Only
*** DoD and FAA Redundant Systems Only
**** DoD Systems Only
***** FAA Redundant Systems and NWS Redundant Systems Only
******NWS Systems and DoD Systems Only

Table 7–1. Running Wire List – Continued

Conductor No.	Conductor Aux.	FROM	TO
		W45 **	
		UD31 J15 (P1)	TB1–DIAL LINES (P2)
3	1	P1–3	P2–3
3	2	P1–28	P2–28
4	1	P1–4	P2–4
4	2	P1–29	P2–29
5	1	P1–5	P2–5
5	2	P1–30	P2–30
6	1	P1–6	P2–6
6	2	P1–31	P2–31
7	1	P1–7	P2–7
7	2	P1–32	P2–32
8	1	P1–8	P2–8
8	2	P1–33	P2–33
9	1	P1–9	P2–9
9	2	P1–34	P2–34
10	1	P1–10	P2–10
10	2	P1–35	P2–35
11	1	P1–11	P2–11
11	2	P1–36	P2–36
12	1	P1–12	P2–12
12	2	P1–37	P2–37
13	1	P1–13	P2–13
13	2	P1–38	P2–38
14	1	P1–14	P2–14
14	2	P1–39	P2–39
15	1	P1–15	P2–15
15	2	P1–40	P2–40
16	1	P1–16	P2–16
16	2	P1–41	P2–41
17	1	P1–17	P2–17
17	2	P1–42	P2–42
18	1	P1–18	P2–18
18	2	P1–43	P2–43
19	1	P1–19	P2–19
19	2	P1–44	P2–44

* NWS Systems Only
** FAA Redundant Systems Only
*** DoD and FAA Redundant Systems Only
**** DoD Systems Only
***** FAA Redundant Systems and NWS Redundant Systems Only
******NWS Systems and DoD Systems Only

Table 7–1. Running Wire List – Continued

Conductor No.	Conductor Aux.	FROM	TO
		W45 **	
		UD31 J15 (P1)	TB1–DIAL LINES (P2)
20	1	P1–20	P2–20
20	2	P1–45	P2–45
21	1	P1–21	P2–21
21	2	P1–46	P2–46
22	1	P1–22	P2–22
22	2	P1–47	P2–47
23	1	P1–23	P2–23
23	2	P1–48	P2–48
24	1	P1–24	P2–24
24	2	P1–49	P2–49
25	1	P1–25	P2–25
25	2	P1–50	P2–50
SHLD		P1–GND	P2–GND
SHLD	A	SHLD	SHLD
26		E101	E101
		W45 ****	
		UD70 J2 (P1)	DIAL LINES (P2)
1	1	P1–1	P2–1
1	2	P1–26	P2–26
2	1	P1–2	P2–2
2	2	P1–27	P2–27
3	1	P1–3	P2–3
3	2	P1–28	P2–28
4	1	P1–4	P2–4
4	2	P1–29	P2–29
5	1	P1–5	P2–5
5	2	P1–30	P2–30
6	1	P1–6	P2–6
6	2	P1–31	P2–31
7	1	P1–7	P2–7
7	2	P1–32	P2–32
8	1	P1–8	P2–8
8	2	P1–33	P2–33

* NWS Systems Only
** FAA Redundant Systems Only
*** DoD and FAA Redundant Systems Only
**** DoD Systems Only
***** FAA Redundant Systems and NWS Redundant Systems Only
******NWS Systems and DoD Systems Only

Table 7–1. Running Wire List – Continued

Conductor No.	Conductor Aux.	FROM	TO
		W45 ****	
		UD70 J2 (P1)	DIAL LINES (P2)
9	1	P1–9	P2–9
9	2	P1–34	P2–34
10	1	P1–10	P2–10
10	2	P1–35	P2–35
11	1	P1–11	P2–11
11	2	P1–36	P2–36
12	1	P1–12	P2–12
12	2	P1–37	P2–37
13	1	P1–13	P2–13
13	2	P1–38	P2–38
14	1	P1–14	P2–14
14	2	P1–39	P2–39
15	1	P1–15	P2–15
15	2	P1–40	P2–40
16	1	P1–16	P2–16
16	2	P1–41	P2–41
17	1	P1–17	P2–17
17	2	P1–42	P2–42
18	1	P1–18	P2–18
18	2	P1–43	P2–43
19	1	P1–19	P2–19
19	2	P1–44	P2–44
20	1	P1–20	P2–20
20	2	P1–45	P2–45
21	1	P1–21	P2–21
21	2	P1–46	P2–46
22	1	P1–22	P2–22
22	2	P1–47	P2–47
23	1	P1–23	P2–23
23	2	P1–48	P2–48
24	1	P1–24	P2–24
24	2	P1–49	P2–49
25	1	P1–25	P2–25
25	2	P1–50	P2–50

* NWS Systems Only
** FAA Redundant Systems Only
*** DoD and FAA Redundant Systems Only
**** DoD Systems Only
***** FAA Redundant Systems and NWS Redundant Systems Only
******NWS Systems and DoD Systems Only

Table 7–1. Running Wire List – Continued

Conductor No.	Conductor Aux.	FROM	TO
		W45 ****	
		UD70 J2 (P1)	DIAL LINES (P2)
SHLD		P1–GND	P2–GND
SHLD	A	SHLD	SHLD
26		E101	E101
		W46 **	
		UD31 J16 (P1)	TB4–LEASED LINES (P2)
1	1	P1–1	P2–1
1	2	P1–26	P2–26
2	1	P1–2	P2–2
2	2	P1–27	P2–27
3	1	P1–3	P2–3
3	2	P1–28	P2–28
4	1	P1–4	P2–4
4	2	P1–29	P2–29
5	1	P1–5	P2–5
5	2	P1–30	P2–30
6	1	P1–6	P2–6
6	2	P1–31	P2–31
7	1	P1–7	P2–7
7	2	P1–32	P2–32
8	1	P1–8	P2–8
8	2	P1–33	P2–33
9	1	P1–9	P2–9
9	2	P1–34	P2–34
10	1	P1–10	P2–10
10	2	P1–35	P2–35
11	1	P1–11	P2–11
11	2	P1–36	P2–36
12	1	P1–12	P2–12
12	2	P1–37	P2–37
13	1	P1–13	P2–13
13	2	P1–38	P2–38
14	1	P1–14	P2–14

* NWS Systems Only
** FAA Redundant Systems Only
*** DoD and FAA Redundant Systems Only
**** DoD Systems Only
***** FAA Redundant Systems and NWS Redundant Systems Only
******NWS Systems and DoD Systems Only

Table 7–1. Running Wire List – Continued

Conductor No.	Conductor Aux.	FROM	TO
		W46 **	
		UD31 J16 (P1)	TB4–LEASED LINES (P2)
14	2	P1–39	P2–39
15	1	P1–15	P2–15
15	2	P1–40	P2–40
16	1	P1–16	P2–16
16	2	P1–41	P2–41
17	1	P1–17	P2–17
17	2	P1–42	P2–42
18	1	P1–18	P2–18
18	2	P1–43	P2–43
19	1	P1–19	P2–19
19	2	P1–44	P2–44
20	1	P1–20	P2–20
20	2	P1–45	P2–45
21	1	P1–21	P2–21
21	2	P1–46	P2–46
22	1	P1–22	P2–22
22	2	P1–47	P2–47
23	1	P1–23	P2–23
23	2	P1–48	P2–48
24	1	P1–24	P2–24
24	2	P1–49	P2–49
25	1	P1–25	P2–25
25	2	P1–50	P2–50
SHLD		P1–GND	P2–GND
SHLD	A	SHLD	SHLD
26		E101	E101
		W46 ****	
		UD70 J3 (P1)	LEASED LINE 2 (P2)
1	1	P1–1	P2–1
1	2	P1–26	P2–26
2	1	P1–2	P2–2
2	2	P1–27	P2–27

* NWS Systems Only
** FAA Redundant Systems Only
*** DoD and FAA Redundant Systems Only
**** DoD Systems Only
***** FAA Redundant Systems and NWS Redundant Systems Only
******NWS Systems and DoD Systems Only

Table 7–1. Running Wire List – Continued

Conductor No.	Conductor Aux.	FROM	TO
		W46 ****	
		UD70 J3 (P1)	LEASED LINE 2 (P2)
3	1	P1–3	P2–3
3	2	P1–28	P2–28
4	1	P1–4	P2–4
4	2	P1–29	P2–29
5	1	P1–5	P2–5
5	2	P1–30	P2–30
6	1	P1–6	P2–6
6	2	P1–31	P2–31
7	1	P1–7	P2–7
7	2	P1–32	P2–32
8	1	P1–8	P2–8
8	2	P1–33	P2–33
9	1	P1–9	P2–9
9	2	P1–34	P2–34
10	1	P1–10	P2–10
10	2	P1–35	P2–35
11	1	P1–11	P2–11
11	2	P1–36	P2–36
12	1	P1–12	P2–12
12	2	P1–37	P2–37
13	1	P1–13	P2–13
13	2	P1–38	P2–38
14	1	P1–14	P2–14
14	2	P1–39	P2–39
15	1	P1–15	P2–15
15	2	P1–40	P2–40
16	1	P1–16	P2–16
16	2	P1–41	P2–41
17	1	P1–17	P2–17
17	2	P1–42	P2–42
18	1	P1–18	P2–18
18	2	P1–43	P2–43
19	1	P1–19	P2–19
19	2	P1–44	P2–44

* NWS Systems Only
** FAA Redundant Systems Only
*** DoD and FAA Redundant Systems Only
**** DoD Systems Only
***** FAA Redundant Systems and NWS Redundant Systems Only
******NWS Systems and DoD Systems Only

Table 7–1. Running Wire List – Continued

Conductor No.	Conductor Aux.	FROM	TO
		W46 ****	
		UD70 J3 (P1)	LEASED LINE 2 (P2)
20	1	P1–20	P2–20
20	2	P1–45	P2–45
21	1	P1–21	P2–21
21	2	P1–46	P2–46
22	1	P1–22	P2–22
22	2	P1–47	P2–47
23	1	P1–23	P2–23
23	2	P1–48	P2–48
24	1	P1–24	P2–24
24	2	P1–49	P2–49
25	1	P1–25	P2–25
25	2	P1–50	P2–50
SHLD		P1–GND	P2–GND
SHLD	A	SHLD	SHLD
26		E101	E101
		W48 *(MLOS)	
		UD1 W96P2 (P1)	UD40A1 J1 (P2)
		W49 *(MLOS)	
		UD1 W97P2 (P1)	UD40A2 J1 (P2)
		W63 *	
		UD5 J11 (P1)	UD1 A28 (P2)
1	1	P1–1	A28–2
1	2	P1–9	A28–4
	SHLD	P1–GND	NC
2	1	P1–10	A28–6
2	2	P1–2	A28–8
	SHLD	P1–GND	NC
SHLD		P1–GND	NC

* NWS Systems Only
** FAA Redundant Systems Only
*** DoD and FAA Redundant Systems Only
**** DoD Systems Only
***** FAA Redundant Systems and NWS Redundant Systems Only
******NWS Systems and DoD Systems Only

Table 7–1. Running Wire List – Continued

Conductor No.	Conductor Aux.	FROM	TO
		W64 *	
		UD1 TELCO (P1)	UD1 A28 (P2)
1		P1–1	A28–9
2		P1–2	A28–7
3		P1–3	NC
4		P1–4	A28–5
5		P1–5	A28–3
6		P1–6	NC
7		P1–7	NC
8		P1–8	NC
		W79*	
		UD75A1A1ETH0 (P1)	UD79A1 ETHERNET (P2)
1	1	P1–1	P2–1
1	2	P1–2	P2–2
2	1	P1–3	P2–3
2	2	P1–6	P2–6
3	1	P1–4	P2–4
3	2	P1–5	P2–5
4	1	P1–7	P2–7
4	2	P1–8	P2–8
		W81*	
		UD75A1A1ETH1 (P1)	UD71A1A1J2<...> (P2)
1	1	P1–3	P2–1
1	2	P1–6	P2–2
2	1	P1–1	P2–3
2	2	P1–2	P2–6
3	1	P1–4	P2–4
3	2	P1–5	P2–5
4	1	P1–7	P2–7
4	2	P1–8	P2–8

* NWS Systems Only
** FAA Redundant Systems Only
*** DoD and FAA Redundant Systems Only
**** DoD Systems Only
***** FAA Redundant Systems and NWS Redundant Systems Only
******NWS Systems and DoD Systems Only

Table 7–1. Running Wire List – Continued

Conductor No.	Conductor Aux.	FROM	TO
		W82*	
		UD75A1A1ETH2 (P1)	UD71A1A1J2<...> (P2)
Same Pinout as Cable W81			
		W83*	
		UD75A1A1ETH3 (P1)	UD71A1A1J2<...> (P2)
Same Pinout as Cable W81			
		W84*	
		UD75A1A1ETH0 (P1)	UD71A1A1J2<...> (P2)
Same Pinout as Cable W81			
		W85*	
		UD75A1ETHERNET0/1	UD79A1 ETHERNET (P2)
1	1	P1–1	P2–1
1	2	P1–2	P2–2
2	1	P1–3	P2–3
2	2	P1–6	P2–6
3	1	P1–4	P2–4
3	2	P1–5	P2–5
4	1	P1–7	P2–7
4	2	P1–8	P2–8
		W95/195 **	
		RMS (FAA) (P1)	UD5/105 J25 (P2)
1	1	P1–15	P2–7
1	2	P1–11	P2–2
2	1	P1–14	P2–3
2	2		
3	1	P1–1	P2–16
3	2	P1–2	P2–6
4	1	P1–12	P2–20
4	2		
5	1	P1–6	P2–14
5	2	P1–8	P2–19
SHLD		P1–GND	P2–GND

* NWS Systems Only
** FAA Redundant Systems Only
*** DoD and FAA Redundant Systems Only
**** DoD Systems Only
***** FAA Redundant Systems and NWS Redundant Systems Only
****** NWS Systems and DoD Systems Only

Table 7–1. Running Wire List – Continued

Conductor No.	Conductor Aux.	FROM	TO
		W95/195 **	
		RMS (FAA) (P1)	UD5/105 J25 (P2)
6		P1–4	P1–12
7		P1–3	P1–13
8		P2–1	P2–7
9		P2–4	P2–5
10		P2–6	P2–8
		W95 ****	
		UD70 J17 (P1)	UD5 J25 (P2)
1	1	P1–15	P2–7
1	2	P1–11	P2–2
2	1	P1–14	P2–3
2	2		
3	1	P1–1	P2–16
3	2	P1–2	P2–6
4	1	P1–12	P2–20
4	2		
5	1	P1–6	P2–14
5	2	P1–8	P2–19
SHLD		P1–GND	P2–GND
6		P1–4	P1–12
7		P1–3	P1–13
8		P2–1	P2–7
9		P2–4	P2–5
10		P2–6	P2–8
		W96 *(MLOS)	
		UD39 J4 (P1)	UD1 W48P1 (P2)
		W97 *(MLOS)	
		UD39 J5 (P1)	UD1 W49P1 (P2)
		W100 *****	
		UD105 J12 (P1)	UD5 J12 (P2)
1	1	P1–1	P2–1
1	2	P1–2	P2–2

* NWS Systems Only
** FAA Redundant Systems Only
*** DoD and FAA Redundant Systems Only
**** DoD Systems Only
***** FAA Redundant Systems and NWS Redundant Systems Only
****** NWS Systems and DoD Systems Only

Table 7–1. Running Wire List – Continued

Conductor No.	Conductor Aux.	FROM	TO
		W100 *****	
		UD105 J12 (P1)	UD5 J12 (P2)
	SHLD	P1–GND	N/C
2	1	P1–16	P2–16
2	2	P1–4	P2–4
	SHLD	P1–GND	N/C
3	1	P1–3	P2–3
3	2	P1–7	P2–7
	SHLD	P1–GND	N/C
4	1	P1–13	P2–6
4	2	P1–19	P2–10
	SHLD	P1–GND	N/C
5	1	P1–44	P2–5
5	2	P1–42	P2–17
	SHLD	P1–GND	N/C
6	1	P1–14	P2–14
6	2	P1–15	P2–15
	SHLD	P1–GND	N/C
7	1	P1–6	P2–13
7	2	P1–10	P2–19
	SHLD	P1–GND	N/C
8	1	P1–11	P2–11
8	2	P1–41	P2–41
	SHLD	P1–GND	N/C
9	1	P1–20	P2–20
9	2	P1–23	P2–23
	SHLD	P1–GND	N/C
10	1	P1–22	P2–22
10	2	P1–25	P2–25
	SHLD	P1–GND	N/C
11	1	P1–26	P2–26
11	2	P1–29	P2–29
	SHLD	P1–GND	N/C
12	1	P1–27	P2–27
12	2	P1–30	P2–30
	SHLD	P1–GND	N/C

* NWS Systems Only
** FAA Redundant Systems Only
*** DoD and FAA Redundant Systems Only
**** DoD Systems Only
***** FAA Redundant Systems and NWS Redundant Systems Only
******NWS Systems and DoD Systems Only

Table 7–1. Running Wire List – Continued

Conductor No.	Conductor Aux.	FROM	TO
		W100 *****	
		UD105 J12 (P1)	UD5 J12 (P2)
13	1	P1–46	P2–28
13	2	P1–45	P2–31
	SHLD	P1–GND	N/C
14	1	P1–32	P2–32
14	2	P1–35	P2–35
	SHLD	P1–GND	N/C
15	1	P1–33	P2–33
15	2	P1–34	P2–34
	SHLD	P1–GND	N/C
16	1	P1–36	P2–36
16	2	P1–37	P2–37
	SHLD	P1–GND	N/C
17	1	P1–38	P2–38
17	2	P1–39	P2–39
	SHLD	P1–GND	N/C
18	1	P1–28	P2–46
18	2	P1–31	P2–47
	SHLD	P1–GND	N/C
19	1	P1–47	P2–48
19	2	P1–48	P2–47
	SHLD	P1–GND	N/C
20	1	P1–49	P2–49
20	2	P1–50	P2–50
	SHLD	P1–GND	N/C
21	1	P1–40	P2–40
21	2	P1–43	P2–18
	SHLD	P1–GND	N/C
22	1	P1–21	P2–21
22	2	P1–24	P2–24
	SHLD	P1–GND	N/C
23	1	P1–8	P2–8
23	2	P1–9	P2–9
	SHLD	P1–GND	N/C
24	1	P1–12	P2–12

* NWS Systems Only
** FAA Redundant Systems Only
*** DoD and FAA Redundant Systems Only
**** DoD Systems Only
***** FAA Redundant Systems and NWS Redundant Systems Only
******NWS Systems and DoD Systems Only

Table 7–1. Running Wire List – Continued

Conductor No.	Conductor Aux.	FROM	TO
		W100 *****	
		UD105 J12 (P1)	UD5 J12 (P2)
24	2	P1–17	P2–42
	SHLD	P1–GND	N/C
25	1	P1–18	P2–43
25	2	P1–5	P2–44
	SHLD	P1–GND	N/C
SHLD		P1–GND	N/C
		W113 **	
		UD70 CP8 (P1)	UD170 CP8 (P2)
1	1	P1–3	P2–1
1	2	P1–6	P2–2
2	1	P1–1	P2–3
2	2	P1–2	P2–6
3	1	P1–7	P2–4
3	2	P1–8	P2–5
4	1	P1–4	P2–7
4	2	P1–5	P2–8
		W114 **	
		UD70 CP9 (P1)	UD170 CP9 (P2)
1	1	P1–3	P2–1
1	2	P1–6	P2–2
2	1	P1–1	P2–3
2	2	P1–2	P2–6
3	1	P1–7	P2–4
3	2	P1–8	P2–5
4	1	P1–4	P2–7
4	2	P1–5	P2–8
		W117*	POWER CORD SOCKET (P2)
		PLUG (P1)	
1		P1–Hot	P2–Hot
2		P1–Neutral	P2–Neutral
3		P1–Ground	P2–Ground

* NWS Systems Only
** FAA Redundant Systems Only
*** DoD and FAA Redundant Systems Only
**** DoD Systems Only
***** FAA Redundant Systems and NWS Redundant Systems Only
******NWS Systems and DoD Systems Only

Table 7–1. Running Wire List – Continued

Conductor No.	Conductor Aux.	FROM		TO
		PLUG (P1)	W129	POWER CORD SOCKET (P2)
1		P1–Hot		P2–Hot
2		P1–Neutral		P2–Neutral
3		P1–Ground		P2–Ground
		UD70 CP11(P1)	W141 **	UD31 J22 (P2) with RJ–45 to DB15(M) adapter. Pinouts shown after passing through adapter to DB15(M) on P2 side.
1	1	P1–1		P2–2
1	2	P1–2		P2–10
2	1	P1–4		P2–9
2	2	P1–5		P2–1
3	1	SPARE		
3	2	SPARE		
4	1	SPARE		
4	2	SPARE		
		UD31J25 (P1)	W143**	TELCO DEMARC (P2)
		P1–1		P2–1
		P1–2		P2–2
		P1–3		P2–3
		P1–4		P2–4
		P1–5		P2–5
		P1–6		P2–6
		P1–7		P2–7
		P1–8		P2–8

* NWS Systems Only
** FAA Redundant Systems Only
*** DoD and FAA Redundant Systems Only
**** DoD Systems Only
***** FAA Redundant Systems and NWS Redundant Systems Only
****** NWS Systems and DoD Systems Only

Table 7–1. Running Wire List – Continued

Conductor No.	Conductor Aux.	FROM	TO
		W151 **	
		UD170 CP11 (P1)	UD31 J24 (P2) with RJ–45 to DB15(M) adapter. Pinouts shown after passing through adapter to DB15(M) on P2 side.
1	1	P1–1	P2–2
1	2	P1–2	P2–10
2	1	P1–4	P2–9
2	2	P1–5	P2–1
3	1	SPARE	
3	2	SPARE	
4	1	SPARE	
4	2	SPARE	
		W162 **	
		UD70 J1 (P1)	UD31 J3 (P2)
1	1	P1–1	P2–1
1	2	P1–26	P2–26
2	1	P1–2	P2–2
2	2	P1–27	P2–27
3	1	P1–3	P2–3
3	2	P1–28	P2–28
4	1	P1–4	P2–4
4	2	P1–29	P2–29
5	1	P1–5	P2–5
5	2	P1–30	P2–30
6	1	P1–6	P2–6
6	2	P1–31	P2–31
7	1	P1–7	P2–7
7	2	P1–32	P2–32
8	1	P1–8	P2–8
8	2	P1–33	P2–33
9	1	P1–9	P2–9
9	2	P1–34	P2–34
10	1	P1–10	P2–10

* NWS Systems Only
** FAA Redundant Systems Only
*** DoD and FAA Redundant Systems Only
**** DoD Systems Only
***** FAA Redundant Systems and NWS Redundant Systems Only
****** NWS Systems and DoD Systems Only

Table 7–1. Running Wire List – Continued

Conductor No.	Conductor Aux.	FROM	TO
		W162 **	
		UD70 J1 (P1)	UD31 J3 (P2)
10	2	P1–35	P2–35
11	1	P1–11	P2–11
11	2	P1–36	P2–36
12	1	P1–12	P2–12
12	2	P1–37	P2–37
13	1	P1–13	P2–13
13	2	P1–38	P2–38
14	1	P1–14	P2–14
14	2	P1–39	P2–39
15	1	P1–15	P2–15
15	2	P1–40	P2–40
16	1	P1–16	P2–16
16	2	P1–41	P2–41
17	1	P1–17	P2–17
17	2	P1–42	P2–42
18	1	P1–18	P2–18
18	2	P1–43	P2–43
19	1	P1–19	P2–19
19	2	P1–44	P2–44
20	1	P1–20	P2–20
20	2	P1–45	P2–45
21	1	P1–21	P2–21
21	2	P1–46	P2–46
22	1	P1–22	P2–22
22	2	P1–47	P2–47
23	1	P1–23	P2–23
23	2	P1–48	P2–48
24	1	P1–24	P2–24
24	2	P1–49	P2–49
25	1	P1–25	P2–25
25	2	P1–50	P2–50
SHLD		P1–GND	P2–GND

* NWS Systems Only
** FAA Redundant Systems Only
*** DoD and FAA Redundant Systems Only
**** DoD Systems Only
***** FAA Redundant Systems and NWS Redundant Systems Only
****** NWS Systems and DoD Systems Only

Table 7–1. Running Wire List – Continued

Conductor		FROM	TO
No.	Aux.		
		W163 **	
		UD70 J2 (P1)	UD31 J4 (P2)
1	1	P1–1	P2–1
1	2	P1–26	P2–26
2	1	P1–2	P2–2
2	2	P1–27	P2–27
3	1	P1–3	P2–3
3	2	P1–28	P2–28
4	1	P1–4	P2–4
4	2	P1–29	P2–29
5	1	P1–5	P2–5
5	2	P1–30	P2–30
6	1	P1–6	P2–6
6	2	P1–31	P2–31
7	1	P1–7	P2–7
7	2	P1–32	P2–32
8	1	P1–8	P2–8
8	2	P1–33	P2–33
9	1	P1–9	P2–9
9	2	P1–34	P2–34
10	1	P1–10	P2–10
10	2	P1–35	P2–35
11	1	P1–11	P2–11
11	2	P1–36	P2–36
12	1	P1–12	P2–12
12	2	P1–37	P2–37
13	1	P1–13	P2–13
13	2	P1–38	P2–38
14	1	P1–14	P2–14
14	2	P1–39	P2–39
15	1	P1–15	P2–15
15	2	P1–40	P2–40
16	1	P1–16	P2–16
16	2	P1–41	P2–41
17	1	P1–17	P2–17
17	2	P1–42	P2–42

* NWS Systems Only
** FAA Redundant Systems Only
*** DoD and FAA Redundant Systems Only
**** DoD Systems Only
***** FAA Redundant Systems and NWS Redundant Systems Only
******NWS Systems and DoD Systems Only

Table 7–1. Running Wire List – Continued

Conductor No.	Conductor Aux.	FROM	TO
		W163 **	
		UD70 J2 (P1)	UD31 J4 (P2)
18	1	P1–18	P2–18
18	2	P1–43	P2–43
19	1	P1–19	P2–19
19	2	P1–44	P2–44
20	1	P1–20	P2–20
20	2	P1–45	P2–45
21	1	P1–21	P2–21
21	2	P1–46	P2–46
22	1	P1–22	P2–22
22	2	P1–47	P2–47
23	1	P1–23	P2–23
23	2	P1–48	P2–48
24	1	P1–24	P2–24
24	2	P1–49	P2–49
25	1	P1–25	P2–25
25	2	P1–50	P2–50
SHLD		P1–GND	P2–GND
		W164 **	
		UD70 J3 (P1)	UD31 J5 (P2)
1	1	P1–1	P2–1
1	2	P1–26	P2–26
2	1	P1–2	P2–2
2	2	P1–27	P2–27
3	1	P1–3	P2–3
3	2	P1–28	P2–28
4	1	P1–4	P2–4
4	2	P1–29	P2–29
5	1	P1–5	P2–5
5	2	P1–30	P2–30
6	1	P1–6	P2–6
6	2	P1–31	P2–31
7	1	P1–7	P2–7
7	2	P1–32	P2–32

* NWS Systems Only
** FAA Redundant Systems Only
*** DoD and FAA Redundant Systems Only
**** DoD Systems Only
***** FAA Redundant Systems and NWS Redundant Systems Only
******NWS Systems and DoD Systems Only

Table 7–1. Running Wire List – Continued

Conductor		FROM	TO
No.	Aux.		
		W164 **	
		UD70 J3 (P1)	UD31 J5 (P2)
8	1	P1–8	P2–8
8	2	P1–33	P2–33
9	1	P1–9	P2–9
9	2	P1–34	P2–34
10	1	P1–10	P2–10
10	2	P1–35	P2–35
11	1	P1–11	P2–11
11	2	P1–36	P2–36
12	1	P1–12	P2–12
12	2	P1–37	P2–37
13	1	P1–13	P2–13
13	2	P1–38	P2–38
14	1	P1–14	P2–14
14	2	P1–39	P2–39
15	1	P1–15	P2–15
15	2	P1–40	P2–40
16	1	P1–16	P2–16
16	2	P1–41	P2–41
17	1	P1–17	P2–17
17	2	P1–42	P2–42
18	1	P1–18	P2–18
18	2	P1–43	P2–43
19	1	P1–19	P2–19
19	2	P1–44	P2–44
20	1	P1–20	P2–20
20	2	P1–45	P2–45
21	1	P1–21	P2–21
21	2	P1–46	P2–46
22	1	P1–22	P2–22
22	2	P1–47	P2–47
23	1	P1–23	P2–23
23	2	P1–48	P2–48
24	1	P1–24	P2–24
24	2	P1–49	P2–49

* NWS Systems Only
** FAA Redundant Systems Only
*** DoD and FAA Redundant Systems Only
**** DoD Systems Only
***** FAA Redundant Systems and NWS Redundant Systems Only
******NWS Systems and DoD Systems Only

Table 7–1. Running Wire List – Continued

Conductor No.	Conductor Aux.	FROM	TO
		W164 **	
		UD70 J3 (P1)	UD31 J5 (P2)
25	1	P1–25	P2–25
25	2	P1–50	P2–50
SHLD		P1–GND	P2–GND
		W166 **	
		UD70 J12 (P1)	UD31 J21 (P2)
1	1	P1–8	P2–8
1	2	P1–6	P2–15
2	1	P1–7	P2–7
2	2	P1–5	P2–14
3	1	P1–1	P2–1
3	2	P1–3	P2–9
4	1	P1–2	P2–2
4	2	P1–4	P2–10
5	1		
5	2		
SHLD		P1–GND	P2–GND
		W168 **	
		UD70 J22 (P1)	UD31 J1 (P2)
1	1	P1–1	P2–1
1	2	P1–2	P2–2
2	1	P1–3	P2–3
2	2	P1–4	P2–4
3	1	P1–5	P2–5
3	2	P1–6	P2–6
4	1	P1–7	P2–7
4	2	P1–8	P2–8
5	1	P1–9	P2–9
5	2	P1–10	P2–10
6	1		
6	2		
SHLD		P1–GND	P2–GND

* NWS Systems Only
** FAA Redundant Systems Only
*** DoD and FAA Redundant Systems Only
**** DoD Systems Only
***** FAA Redundant Systems and NWS Redundant Systems Only
****** NWS Systems and DoD Systems Only

Table 7–1. Running Wire List – Continued

Conductor		FROM	TO
No.	Aux.		
		W169 **	
		UD170 J1 (P1)	UD31 J8 (P2)
1	1	P1–1	P2–1
1	2	P1–26	P2–26
2	1	P1–2	P2–2
2	2	P1–27	P2–27
3	1	P1–3	P2–3
3	2	P1–28	P2–28
4	1	P1–4	P2–4
4	2	P1–29	P2–29
5	1	P1–5	P2–5
5	2	P1–30	P2–30
6	1	P1–6	P2–6
6	2	P1–31	P2–31
7	1	P1–7	P2–7
7	2	P1–32	P2–32
8	1	P1–8	P2–8
8	2	P1–33	P2–33
9	1	P1–9	P2–9
9	2	P1–34	P2–34
10	1	P1–10	P2–10
10	2	P1–35	P2–35
11	1	P1–11	P2–11
11	2	P1–36	P2–36
12	1	P1–12	P2–12
12	2	P1–37	P2–37
13	1	P1–13	P2–13
13	2	P1–38	P2–38
14	1	P1–14	P2–14
14	2	P1–39	P2–39
15	1	P1–15	P2–15
15	2	P1–40	P2–40
16	1	P1–16	P2–16
16	2	P1–41	P2–41
17	1	P1–17	P2–17
17	2	P1–42	P2–42

* NWS Systems Only
** FAA Redundant Systems Only
*** DoD and FAA Redundant Systems Only
**** DoD Systems Only
***** FAA Redundant Systems and NWS Redundant Systems Only
******NWS Systems and DoD Systems Only

Table 7–1. Running Wire List – Continued

Conductor No.	Conductor Aux.	FROM	TO
		W169 **	
		UD170 J1 (P1)	UD31 J8 (P2)
18	1	P1–18	P2–18
18	2	P1–43	P2–43
19	1	P1–19	P2–19
19	2	P1–44	P2–44
20	1	P1–20	P2–20
20	2	P1–45	P2–45
21	1	P1–21	P2–21
21	2	P1–46	P2–46
22	1	P1–22	P2–22
22	2	P1–47	P2–47
23	1	P1–23	P2–23
23	2	P1–48	P2–48
24	1	P1–24	P2–24
24	2	P1–49	P2–49
25	1	P1–25	P2–25
25	2	P1–50	P2–50
SHLD		P1–GND	P2–GND
		W170 **	
		UD170 J2 (P1)	UD31 J9 (P2)
1	1	P1–1	P2–1
1	2	P1–26	P2–26
2	1	P1–2	P2–2
2	2	P1–27	P2–27
3	1	P1–3	P2–3
3	2	P1–28	P2–28
4	1	P1–4	P2–4
4	2	P1–29	P2–29
5	1	P1–5	P2–5
5	2	P1–30	P2–30
6	1	P1–6	P2–6
6	2	P1–31	P2–31
7	1	P1–7	P2–7
7	2	P1–32	P2–32

* NWS Systems Only
** FAA Redundant Systems Only
*** DoD and FAA Redundant Systems Only
**** DoD Systems Only
***** FAA Redundant Systems and NWS Redundant Systems Only
****** NWS Systems and DoD Systems Only

Table 7–1. Running Wire List – Continued

Conductor		FROM	TO
No.	Aux.		
		W170 **	
		UD170 J2 (P1)	UD31 J9 (P2)
8	1	P1–8	P2–8
8	2	P1–33	P2–33
9	1	P1–9	P2–9
9	2	P1–34	P2–34
10	1	P1–10	P2–10
10	2	P1–35	P2–35
11	1	P1–11	P2–11
11	2	P1–36	P2–36
12	1	P1–12	P2–12
12	2	P1–37	P2–37
13	1	P1–13	P2–13
13	2	P1–38	P2–38
14	1	P1–14	P2–14
14	2	P1–39	P2–39
15	1	P1–15	P2–15
15	2	P1–40	P2–40
16	1	P1–16	P2–16
16	2	P1–41	P2–41
17	1	P1–17	P2–17
17	2	P1–42	P2–42
18	1	P1–18	P2–18
18	2	P1–43	P2–43
19	1	P1–19	P2–19
19	2	P1–44	P2–44
20	1	P1–20	P2–20
20	2	P1–45	P2–45
21	1	P1–21	P2–21
21	2	P1–46	P2–46
22	1	P1–22	P2–22
22	2	P1–47	P2–47
23	1	P1–23	P2–23
23	2	P1–48	P2–48
24	1	P1–24	P2–24
24	2	P1–49	P2–49

* NWS Systems Only
** FAA Redundant Systems Only
*** DoD and FAA Redundant Systems Only
**** DoD Systems Only
***** FAA Redundant Systems and NWS Redundant Systems Only
******NWS Systems and DoD Systems Only

Table 7–1. Running Wire List – Continued

Conductor No.	Conductor Aux.	FROM	TO
		W170 **	
		UD170 J2 (P1)	UD31 J9 (P2)
25	1	P1–25	P2–25
25	2	P1–50	P2–50
SHLD		P1–GND	P2–GND
		W171 **	
		UD170 J3 (P1)	UD31 J10 (P2)
1	1	P1–1	P2–1
1	2	P1–26	P2–26
2	1	P1–2	P2–2
2	2	P1–27	P2–27
3	1	P1–3	P2–3
3	2	P1–28	P2–28
4	1	P1–4	P2–4
4	2	P1–29	P2–29
5	1	P1–5	P2–5
5	2	P1–30	P2–30
6	1	P1–6	P2–6
6	2	P1–31	P2–31
7	1	P1–7	P2–7
7	2	P1–32	P2–32
8	1	P1–8	P2–8
8	2	P1–33	P2–33
9	1	P1–9	P2–9
9	2	P1–34	P2–34
10	1	P1–10	P2–10
10	2	P1–35	P2–35
11	1	P1–11	P2–11
11	2	P1–36	P2–36
12	1	P1–12	P2–12
12	2	P1–37	P2–37
13	1	P1–13	P2–13
13	2	P1–38	P2–38
14	1	P1–14	P2–14
14	2	P1–39	P2–39

* NWS Systems Only
** FAA Redundant Systems Only
*** DoD and FAA Redundant Systems Only
**** DoD Systems Only
***** FAA Redundant Systems and NWS Redundant Systems Only
******NWS Systems and DoD Systems Only

Table 7–1. Running Wire List – Continued

Conductor No.	Conductor Aux.	FROM	TO
		W171 **	
		UD170 J3 (P1)	UD31 J10 (P2)
15	1	P1–15	P2–15
15	2	P1–40	P2–40
16	1	P1–16	P2–16
16	2	P1–41	P2–41
17	1	P1–17	P2–17
17	2	P1–42	P2–42
18	1	P1–18	P2–18
18	2	P1–43	P2–43
19	1	P1–19	P2–19
19	2	P1–44	P2–44
20	1	P1–20	P2–20
20	2	P1–45	P2–45
21	1	P1–21	P2–21
21	2	P1–46	P2–46
22	1	P1–22	P2–22
22	2	P1–47	P2–47
23	1	P1–23	P2–23
23	2	P1–48	P2–48
24	1	P1–24	P2–24
24	2	P1–49	P2–49
25	1	P1–25	P2–25
25	2	P1–50	P2–50
SHLD		P1–GND	P2–GND
		W173 **	
		UD170 J12 (P1)	UD31 J23 (P2)
1	1	P1–8	P2–8
1	2	P1–6	P2–15
2	1	P1–7	P2–7
2	2	P1–5	P2–14
3	1	P1–1	P2–1
3	2	P1–3	P2–9
4	1	P1–2	P2–2
4	2	P1–4	P2–10

* NWS Systems Only
** FAA Redundant Systems Only
*** DoD and FAA Redundant Systems Only
**** DoD Systems Only
***** FAA Redundant Systems and NWS Redundant Systems Only
****** NWS Systems and DoD Systems Only

Table 7–1. Running Wire List – Continued

Conductor No.	Conductor Aux.	FROM	TO
		W173 **	
		UD170 J12 (P1)	UD31 J23 (P2)
5	1		
5	2		
SHLD		P1–GND	P2–GND
		W178 **	
		UD170 J22 (P1)	UD31 J2 (P2)
1	1	P1–1	P2–1
1	2	P1–2	P2–2
2	1	P1–3	P2–3
2	2	P1–4	P2–4
3	1	P1–5	P2–5
3	2	P1–6	P2–6
4	1	P1–7	P2–7
4	2	P1–8	P2–8
5	1	P1–9	P2–9
5	2	P1–10	P2–10
6	1		
6	2		
SHLD		P1–GND	P2–GND
		W181 *	
		UD105 J11 (P1) (NWS Redundant only)	TB2–DIAL LINES (P2)
1	1	P1–4	P2–2
1	2	P1–5	P2–27
2	1	P1–3	P2–25
2	2	P1–6	P2–50
SHLD		P1–GND	NC
		W182 *	
		UD5 J27 (P1) (NWS Redundant only)	UD105 J27 (P2)
1	1	P1–1	P2–1
1	2	P1–3	P2–3
2	1	P1–2	P2–2

* NWS Systems Only
** FAA Redundant Systems Only
*** DoD and FAA Redundant Systems Only
**** DoD Systems Only
***** FAA Redundant Systems and NWS Redundant Systems Only
****** NWS Systems and DoD Systems Only

Table 7–1. Running Wire List – Continued

Conductor No.	Conductor Aux.	FROM	TO
		W182 *	
		UD5 J27 (P1) (NWS Redundant only)	UD105 J27 (P2)
2	2	P1–7	P2–7
3	1	P1–6	P2–6
3	2	P1–15	P2–15
4	1	P1–14	P2–14
4	2	P1–4	P2–4
SHLD		P1–GND	P2–GND
		W183 *	
		UD5 J26 (P1) (NWS Redundant only)	UD105 J26 (P2)
1	1	P1–1	P2–1
1	2	P1–3	P2–3
2	1	P1–2	P2–2
2	2	P1–7	P2–7
3	1	P1–6	P2–6
3	2	P1–15	P2–15
4	1	P1–14	P2–14
4	2	P1–4	P2–4
SHLD		P1–GND	P2–GND
		W184 *****	
		UD5 J15 (P1)	UD105 J15 (P2)
1	1	P1–3	P2–12
1	2	P1–11	P2–4
2	1	P1–12	P2–3
2	2	P1–4	P2–11
3	1	P1–5	P2–13
3	2	P1–13	P2–5
4	1	P1–1	P2–2
4	2	P1–9	P2–10
5	1	P1–2	P2–1
5	2	P1–10	P2–9
6	1	P1–7	P2–7

* NWS Systems Only
** FAA Redundant Systems Only
*** DoD and FAA Redundant Systems Only
**** DoD Systems Only
***** FAA Redundant Systems and NWS Redundant Systems Only
****** NWS Systems and DoD Systems Only

Table 7–1. Running Wire List – Continued

Conductor No.	Conductor Aux.	FROM	TO
		W184 *****	
		UD5 J15 (P1)	UD105 J15 (P2)
6	2	P1–15	P2–15
SHLD		P1–GND	P2–GND
		W185 *	
		UD5 J28 (P1) (NWS Redundant only)	UD105 J28 (P2)
1	1	P1–1	P2–1
1	2	P1–9	P2–9
2	1	P1–3	P2–3
2	2	P1–11	P2–11
SHLD		P1–2	P2–2
SHLD		P1–GND	P2–GND
3		P1–2	P1–4
4		P2–1	P2–4
		W200 *	
		UD70 FL1J1(P1)	208VAC/3PH (P2)
1		P1–A	P2–X
2		P1–B	P2–Y
3		P1–C	P2–Z
4		P1–D	P2–G
5		P1–E	P2–W
		W201 *	
		UD70 J1 (P1)	LEASED LINES (P2)
1	1	P1–1	P2–1
1	2	P1–26	P2–26
2	1	P1–2	P2–2
2	2	P1–27	P2–27
3	1	P1–3	P2–3
3	2	P1–28	P2–28
4	1	P1–4	P2–4
4	2	P1–29	P2–29
5	1	P1–5	P2–5

* NWS Systems Only
** FAA Redundant Systems Only
*** DoD and FAA Redundant Systems Only
**** DoD Systems Only
***** FAA Redundant Systems and NWS Redundant Systems Only
******NWS Systems and DoD Systems Only

Table 7–1. Running Wire List – Continued

Conductor No.	Conductor Aux.	FROM	TO
		W201 *	
		UD70 J1 (P1)	LEASED LINES (P2)
5	2	P1–30	P2–30
6	1	P1–6	P2–6
6	2	P1–31	P2–31
7	1	P1–7	P2–7
7	2	P1–32	P2–32
8	1	P1–8	P2–8
8	2	P1–33	P2–33
9	1	P1–9	P2–9
9	2	P1–34	P2–34
10	1	P1–10	P2–10
10	2	P1–35	P2–35
11	1	P1–11	P2–11
11	2	P1–36	P2–36
12	1	P1–12	P2–12
12	2	P1–37	P2–37
13	1	P1–13	P2–13
13	2	P1–38	P2–38
14	1	P1–14	P2–14
14	2	P1–39	P2–39
15	1	P1–15	P2–15
15	2	P1–40	P2–40
16	1	P1–16	P2–16
16	2	P1–41	P2–41
17	1	P1–17	P2–17
17	2	P1–42	P2–42
18	1	P1–18	P2–18
18	2	P1–43	P2–43
19	1	P1–19	P2–19
19	2	P1–44	P2–44
20	1	P1–20	P2–20
20	2	P1–45	P2–45
21	1	P1–21	P2–21
21	2	P1–46	P2–46
22	1	P1–22	P2–22

* NWS Systems Only
** FAA Redundant Systems Only
*** DoD and FAA Redundant Systems Only
**** DoD Systems Only
***** FAA Redundant Systems and NWS Redundant Systems Only
******NWS Systems and DoD Systems Only

Table 7–1. Running Wire List – Continued

Conductor No.	Conductor Aux.	FROM	TO
		W201 *	
		UD70 J1 (P1)	LEASED LINES (P2)
22	2	P1–47	P2–47
23	1	P1–23	P2–23
23	2	P1–48	P2–48
24	1	P1–24	P2–24
24	2	P1–49	P2–49
25	1	P1–25	P2–25
25	2	P1–50	P2–50
SHLD		P1–GND	SHLD
		W202 *	
		UD70 J2 (P1)	DIAL LINES (P2)
1	1	P1–1	P2–1
1	2	P1–26	P2–26
2	1	P1–2	P2–2
2	2	P1–27	P2–27
3	1	P1–3	P2–3
3	2	P1–28	P2–28
4	1	P1–4	P2–4
4	2	P1–29	P2–29
5	1	P1–5	P2–5
5	2	P1–30	P2–30
6	1	P1–6	P2–6
6	2	P1–3	P2–31
7	1	P1–7	P2–7
7	2	P1–32	P2–32
8	1	P1–8	P2–8
8	2	P1–33	P2–33
9	1	P1–9	P2–9
9	2	P1–34	P2–34
10	1	P1–10	P2–10
10	2	P1–35	P2–35
11	1	P1–11	P2–11
11	2	P1–36	P2–36
12	1	P1–12	P2–12

* NWS Systems Only
** FAA Redundant Systems Only
*** DoD and FAA Redundant Systems Only
**** DoD Systems Only
***** FAA Redundant Systems and NWS Redundant Systems Only
******NWS Systems and DoD Systems Only

Table 7–1. Running Wire List – Continued

Conductor No.	Conductor Aux.	FROM	TO
		W202 *	
		UD70 J2 (P1)	DIAL LINES (P2)
12	2	P1–37	P2–37
13	1	P1–13	P2–13
14	1	P1–14	P2–14
14	2	P1–39	P2–39
15	1	P1–15	P2–15
15	2	P1–40	P2–40
16	1	P1–16	P2–16
16	2	P1–41	P2–41
17	1	P1–17	P2–17
17	2	P1–42	P2–42
18	1	P1–18	P2–18
18	2	P1–43	P2–43
19	1	P1–19	P2–19
19	2	P1–44	P2–44
20	1	P1–20	P2–20
20	2	P1–45	P2–45
21	1	P1–21	P2–21
21	2	P1–46	P2–46
13	2	P1–38	P2–38
22	1	P1–22	P2–22
22	2	P1–47	P2–47
23	1	P1–23	P2–23
23	2	P1–48	P2–48
24	1	P1–24	P2–24
24	2	P1–49	P2–49
25	1	P1–25	P2–25
25	2	P1–50	P2–50
SHLD		P1–GND	SHLD
		W211****	
		UD70 CP11 (P1)	TELCO SMART JACK (P2)
1	1	P1–1	P2–1
1	2	P1–2	P2–2

* NWS Systems Only
** FAA Redundant Systems Only
*** DoD and FAA Redundant Systems Only
**** DoD Systems Only
***** FAA Redundant Systems and NWS Redundant Systems Only
****** NWS Systems and DoD Systems Only

Table 7–1. Running Wire List – Continued

Conductor No.	Conductor Aux.	FROM	TO
		W211****	
		UD70 CP11 (P1)	TELCO SMART JACK (P2)
2	1	P1–3	P2–3
2	2	P1–4	P2–4
3	1	P1–5	P2–5
3	2	P1–6	P2–6
4	1	P1–7	P2–7
4	2	P1–8	P2–8
		W216 *	
		UD70 J19 (P2)	A26 LOAD
1	1	P2–1	A1LOAD–1
1	2	P2–9	A1LOAD–2
	A	SHLD	NC
	B	SHLD	E101
2	1	P2–2	A1LOAD–3
2	2	P2–10	A1LOAD–4
	A	SHLD	NC
	B	SHLD	E101
3	1	NC	NC
3	2	NC	NC
		E101	A1LOAD–GND
		W216 *	
		UD70 J19 (P2)	UD1 A26
SHLD		SHLD	P2–GND
1	1	P2–1	A1–2
1	2	P2–9	A1–4
	SHLD	P2–GND	NC
2	1	P2–10	A1–6
2	2	P2–2	A1–8
	SHLD	P2–GND	NC
SHLD		P2–GND	NC

* NWS Systems Only
** FAA Redundant Systems Only
*** DoD and FAA Redundant Systems Only
**** DoD Systems Only
***** FAA Redundant Systems and NWS Redundant Systems Only
******NWS Systems and DoD Systems Only

Table 7–1. Running Wire List – Continued

Conductor No.	Conductor Aux.	FROM	TO
		W218 *	
		UD70 J19 (P1)	A28 (P2)
1	1	P1–1	A28–2
1	2	P1–9	A28–4
	SHLD	P1–GND	N/C
2	1	P1–10	A28–4
2	2	P1–2	A28–8
	SHLD	P1–GND	N/C
SHLD		P1–GND	N/C
		W219 *	
		TELCO (P2)	A28
1		P2–1	A28–9
2		P2–2	A28–7
3		P2–3	N/C
4		P2–4	A28–5
5		P2–5	A28–3
6		P2–6	N/C
7		P2–7	N/C
8		P2–8	N/C
		W220 ****	
		UD71 A5 LEASED LINE (P1)	DEMARCATION FRAME (P2)
1		P1–1	SITE DEPENDENT.
2		P1–2	
3		P1–3	
4		P1–4	
5		P1–5	
6		P1–6	
7		P1–7	
8		P1–8	
		W227 **	
		UD71 A5 LEASED LINE (P1)	SURGE SUPPRESSOR
1		P1–1	2

* NWS Systems Only
** FAA Redundant Systems Only
*** DoD and FAA Redundant Systems Only
**** DoD Systems Only
***** FAA Redundant Systems and NWS Redundant Systems Only
****** NWS Systems and DoD Systems Only

Table 7–1. Running Wire List – Continued

Conductor No.	Conductor Aux.	FROM	TO
		W227 **	
		UD71 A5 LEASED LINE (P1)	SURGE SUPPRESSOR
2		P1–2	4
3		P1–7	6
4		P1–8	8
		W228 **	
		SURGE SUPPRESSOR	TELCO JACK (P1)
1		3	P1–3 (TX out)
2		5	P1–4 (TX out)
3		7	P1–2 (RECV in)
4		9	P1–5 (RECV in)
		W230 *	
		UD70 J3 (P1)	LEASED LINE 2 (P2)
1	1	P1–1	P2–1
1	2	P1–26	P2–26
2	1	P1–2	P2–2
2	2	P1–27	P2–27
3	1	P1–3	P2–3
3	2	P1–28	P2–29
4	1	P1–4	P2–4
4	2	P1–29	P2–29
5	1	P1–5	P2–5
5	2	P1–30	P2–30
6	1	P1–6	P2–6
6	2	P1–31	P2–31
7	1	P1–7	P2–7
7	2	P1–32	P2–32
8	1	P1–8	P2–8
8	2	P1–33	P2–33
9	1	P1–9	P2–9
9	2	P1–34	P2–34
10	1	P1–10	P2–10
10	2	P1–35	P2–35
11	1	P1–11	P2–11

* NWS Systems Only
** FAA Redundant Systems Only
*** DoD and FAA Redundant Systems Only
**** DoD Systems Only
***** FAA Redundant Systems and NWS Redundant Systems Only
******NWS Systems and DoD Systems Only

Table 7–1. Running Wire List – Continued

Conductor No.	Conductor Aux.	FROM	TO
		W230 *	
		UD70 J3 (P1)	LEASED LINE 2 (P2)
11	2	P1–36	P2–36
12	1	P1–12	P2–12
12	2	P1–37	P2–37
13	1	P1–18	P2–18
13	2	P1–38	P2–38
14	1	P1–14	P2–14
14	2	P1–39	P2–39
15	1	P1–15	P2–15
15	2	P1–40	P2–40
16	1	P1–16	P2–16
16	2	P1–41	P2–41
17	1	P1–17	P2–17
17	2	P1–42	P2–42
18	1	P1–18	P2–18
18	2	P1–43	P2–43
19	1	P1–19	P2–19
19	2	P1–44	P2–44
20	1	P1–20	P2–20
20	2	P1–45	P2–45
21	1	P1–21	P2–21
21	2	P1–46	P2–46
22	1	P1–22	P2–22
22	2	P1–47	P2–47
23	1	P1–23	P2–23
23	2	P1–48	P2–48
24	1	P1–24	P2–24
24	2	P1–49	P2–49
25	1	P1–25	P2–25
25	2	P1–50	P2–50
SHLD		SHLD A	P1–GND
		SHLD B	E101
		E101	P2–GND

* NWS Systems Only
** FAA Redundant Systems Only
*** DoD and FAA Redundant Systems Only
**** DoD Systems Only
***** FAA Redundant Systems and NWS Redundant Systems Only
******NWS Systems and DoD Systems Only

Table 7–1. Running Wire List – Continued

Conductor No.	Conductor Aux.	FROM	TO
		W239 *	
		UD32A4 Line (P2) (NWS Redundant only)	TELCO DEMARC (P2)
1		P2–1	Demarc – Modem transmit out.
2		P2–2	Demarc – Modem transmit out.
3		P2–7	Demarc – Modem receive in.
4		P2–8	Demarc – Modem receive in.
		W250 *(MLOS)	
		UD70 J20 (P1)	UD39 J2 (P2)
1	1	P1–1	P2–1
1	2	P1–2	P2–2
	SHLD	SHLD B	E101
		E101	P2–3
2	1		
2	2		
	SHLD		
3	1		
3	2		
	SHLD		
		W251 *(MLOS)	
		UD70 J19 (P1)	UD39 J1 (P2)
1	1	P1–1	P2–1
1	2	P1–9	P2–2
2	1	P1–2	P2–4
2	2	P1–10	P2–5
SHLD		SHLD B	E101
		E101	P2–3

* NWS Systems Only
** FAA Redundant Systems Only
*** DoD and FAA Redundant Systems Only
**** DoD Systems Only
***** FAA Redundant Systems and NWS Redundant Systems Only
******NWS Systems and DoD Systems Only

Table 7–1. Running Wire List – Continued

Conductor No.	Conductor Aux.	FROM		TO
		UD70CP2	W271****	TELCO DEMARC (P2)
1	1	P1–1		DEMARC – receive in
1	2	P1–2		DEMARC – receive in
2	1	P1–4		DEMARC – transmit out
2	2	P1–5		DEMARC – transmit out
		UD70CP6 (P1)	W317*	UD75A1A1ETH2 (P2)
		NOTE W317 used only at Paducah WFO for Evansville RPG PCA to Frame Relay Hub Router.		
1	1	P1–1		P2–1
1	2	P1–2		P2–2
2	1	P1–3		P2–3
2	2	P1–4		P2–4
3	1	P1–5		P2–5
3	2	P1–6		P2–6
4	1	P1–7		P2–7
4	2	P1–8		P2–8
		E2 LINE (P1) (E2 is connected to UD75A1A1W0T1)	W318*	TELCO SMART JACK (P2)
1	1	P1–1		P2–1
1	2	P1–2		P2–2
2	1	P1–3		P2–3
2	2	P1–4		P2–4
3	1	P1–5		P2–5
3	2	P1–6		P2–6
4	1	P1–7		P2–7
4	2	P1–8		P2–8

* NWS Systems Only
** FAA Redundant Systems Only
*** DoD and FAA Redundant Systems Only
**** DoD Systems Only
***** FAA Redundant Systems and NWS Redundant Systems Only
****** NWS Systems and DoD Systems Only

Table 7–1. Running Wire List – Continued

Conductor No.	Conductor Aux.	FROM	TO
		W319*	
		UD75A1 ETHERNET 0/0 (P1)	AWIPS PT PORT3 (P2)
1	1	P1–1	P2–1
1	2	P1–2	P2–2
2	1	P1–3	P2–3
2	2	P1–4	P2–4
3	1	P1–5	P2–5
3	2	P1–6	P2–6
4	1	P1–7	P2–7
4	2	P1–8	P2–8
		* W320*	
		UD70 CP6 (P1)	UD75A1 ETHERNET 0/1 (P2)
1	1	P1–1	P2–1
1	2	P1–2	P2–2
2	1	P1–3	P2–3
2	2	P1–4	P2–4
3	1	P1–5	P2–5
3	2	P1–6	P2–6
4	1	P1–7	P2–7
4	2	P1–8	P2–8
		W323	
		UD41 J16 (P1)	LEASED LINES (P2)
1	1	P1–1	P2–1
1	2	P1–26	P2–26
2	1	P1–2	P2–2
2	2	P1–27	P2–27
3	1	P1–3	P2–3
3	2	P1–28	P2–28
4	1	P1–4	P2–4
4	2	P1–29	P2–29
5	1	P1–5	P2–5
5	2	P1–30	P2–30
6	1	P1–6	P2–6

* NWS Systems Only
** FAA Redundant Systems Only
*** DoD and FAA Redundant Systems Only
**** DoD Systems Only
***** FAA Redundant Systems and NWS Redundant Systems Only
******NWS Systems and DoD Systems Only

Table 7–1. Running Wire List – Continued

Conductor No.	Conductor Aux.	FROM	TO
		W323	
		UD41 J16 (P1)	LEASED LINES (P2)
6	2	P1–31	P2–31
7	1	P1–7	P2–7
7	2	P1–32	P2–32
8	1	P1–8	P2–8
8	2	P1–33	P2–33
9	1	P1–9	P2–9
9	2	P1–34	P2–34
10	1	P1–10	P2–10
10	2	P1–35	P2–35
11	1	P1–11	P2–11
11	2	P1–36	P2–36
12	1	P1–12	P2–12
12	2	P1–37	P2–37
13	1	P1–13	P2–13
13	2	P1–38	P2–38
14	1	P1–14	P2–14
14	2	P1–39	P2–39
15	1	P1–15	P2–15
15	2	P1–40	P2–40
16	1	P1–16	P2–16
16	2	P1–41	P2–41
17	1	P1–17	P2–17
17	2	P1–42	P2–42
18	1	P1–18	P2–18
18	2	P1–43	P2–43
19	1	P1–19	P2–19
19	2	P1–44	P2–44
20	1	P1–20	P2–20
20	2	P1–45	P2–45
21	1	P1–21	P2–21
21	2	P1–46	P2–46
22	1	P1–22	P2–22
22	2	P1–47	P2–47
23	1	P1–23	P2–23

* NWS Systems Only
** FAA Redundant Systems Only
*** DoD and FAA Redundant Systems Only
**** DoD Systems Only
***** FAA Redundant Systems and NWS Redundant Systems Only
******NWS Systems and DoD Systems Only

Table 7–1. Running Wire List – Continued

Conductor No.	Conductor Aux.	FROM	TO
		W323	
		UD41 J16 (P1)	LEASED LINES (P2)
23	2	P1–48	P2–48
24	1	P1–24	P2–24
24	2	P1–49	P2–49
25	1	P1–25	P2–25
25	2	P1–50	P2–50
		P1–GND	
		SHLD	E101
		E101	P2–GND
		W324	
		UD41 J17 (P1)	DIAL LINES (P2)
1	1	P1–1	P2–1
1	2	P1–26	P2–26
2	1	P1–2	P2–2
2	2	P1–27	P2–27
3	1	P1–3	P2–3
3	2	P1–28	P2–28
4	1	P1–4	P2–4
4	2	P1–29	P2–29
5	1	P1–5	P2–5
5	2	P1–30	P2–30
6	1	P1–6	P2–6
6	2	P1–31	P2–31
7	1	P1–7	P2–7
7	2	P1–32	P2–32
8	1	P1–8	P2–8
8	2	P1–33	P2–33
9	1	P1–9	P2–9
9	2	P1–34	P2–34
10	1	P1–10	P2–10
10	2	P1–35	P2–35
11	1	P1–11	P2–11
11	2	P1–36	P2–36
12	1	P1–12	P2–12

* NWS Systems Only
** FAA Redundant Systems Only
*** DoD and FAA Redundant Systems Only
**** DoD Systems Only
***** FAA Redundant Systems and NWS Redundant Systems Only
******NWS Systems and DoD Systems Only

Table 7–1. Running Wire List – Continued

Conductor No.	Conductor Aux.	FROM	TO
		W324	
		UD41 J17 (P1)	DIAL LINES (P2)
12	2	P1–37	P2–37
13	1	P1–13	P2–13
13	2	P1–38	P2–38
14	1	P1–14	P2–14
14	2	P1–39	P2–39
15	1	P1–15	P2–15
15	2	P1–40	P2–40
16	1	P1–16	P2–16
16	2	P1–41	P2–41
17	1	P1–17	P2–17
17	2	P1–42	P2–42
18	1	P1–18	P2–18
18	2	P1–43	P2–43
19	1	P1–19	P2–19
19	2	P1–44	P2–44
20	1	P1–20	P2–20
20	2	P1–45	P2–45
21	1	P1–21	P2–21
21	2	P1–46	P2–46
22	1	P1–22	P2–22
22	2	P1–47	P2–47
23	1	P1–23	P2–23
23	2	P1–48	P2–48
24	1	P1–24	P2–24
24	2	P1–49	P2–49
25	1	P1–25	P2–25
25	2	P1–50	P2–50
		P1–GND	
		SHLD	E101
		E101	P2–GND

* NWS Systems Only
** FAA Redundant Systems Only
*** DoD and FAA Redundant Systems Only
**** DoD Systems Only
***** FAA Redundant Systems and NWS Redundant Systems Only
******NWS Systems and DoD Systems Only

Table 7–1. Running Wire List – Continued

Conductor No.	Conductor Aux.	FROM	TO
		W328 *	
		UD41 J15 (P1)	UD70 J5 (P2)
1	1	P1–4	P2–4
1	2	P1–22	P2–22
2	1	P1–6	P2–6
2	2	P1–24	P2–24
3	1	P1–7	P2–7
3	2	P1–25	P1–25
4	1	P1–9	P2–9
4	2	P1–27	P2–27
5	1	P1–11	P2–11
5	2	P1–29	P2–29
6	1	P1–13	P2–13
6	2	P1–31	P2–31
7	1	P1–5	P2–5
7	2	P1–23	P1–23
8	1	P1–8	P2–8
8	2	P1–26	P2–26
9	1	P1–12	P2–12
9	2	P1–30	P2–30
10	1	P1–17	P2–17
10	2	P1–35	P2–35
11	1	P1–1	P2–1
11	2	P1–36	P2–36
12	1	P1–19	P2–19
12	2	P1–37	P2–37
13	1	P1–15	P2–15
13	2	P1–18	P2–18
14	1	P1–2	P2–2
14	2	P1–20	P2–20
15	1	P1–33	P2–33
15	2	P1–34	P2–34
	SHLD	SHLD A	P1–GND

* NWS Systems Only
** FAA Redundant Systems Only
*** DoD and FAA Redundant Systems Only
**** DoD Systems Only
***** FAA Redundant Systems and NWS Redundant Systems Only
****** NWS Systems and DoD Systems Only

Table 7–1. Running Wire List – Continued

Conductor No.	Conductor Aux.	FROM	TO
NOTE: Pairs 3 & 4 are not critical but may also be swapped.		W331 * UD70 CP1 (P1)	UD71 A1A1J2 (P2)
1	1	P1–3	P2–1
1	2	P1–6	P2–2
2	1	P1–1	P2–3
2	2	P1–2	P2–6
3	1	P1–4	P2–4
3	2	P1–5	P2–5
4	1	P1–7	P2–7
4	2	P1–8	P2–8
		W332 * UD70 CP10 (P1)	UD79 A1 ETHERNET (P2)
1	1	P1–1	P2–1
1	2	P1–2	P2–2
2	1	P1–3	P2–3
2	2	P1–6	P2–6
3	1	P1–4	P2–4
3	2	P1–5	P2–5
4	1	P1–7	P2–7
4	2	P1–8	P2–8

* NWS Systems Only
** FAA Redundant Systems Only
*** DoD and FAA Redundant Systems Only
**** DoD Systems Only
***** FAA Redundant Systems and NWS Redundant Systems Only
******NWS Systems and DoD Systems Only

Table 7–1. Running Wire List – Continued

Conductor No.	Conductor Aux.	FROM	TO
NOTE: Pairs 3 & 4 are not critical but may also be swapped.		W333 *** UD71 A1A1J2 (P1)	UD79 A1 ETHERNET (P2)
1	1	P1–3	P2–1
1	2	P1–6	P2–2
2	1	P1–1	P2–3
2	2	P1–2	P2–6
3	1	P1–4	P2–4
3	2	P1–5	P2–5
4	1	P1–7	P2–7
4	2	P1–8	P2–8
		W340* UD70 CP6 (P1)	AWIPS PT PORT3 (P2)
1	1	P1–1	P2–1
1	2	P1–2	P2–2
2	1	P1–3	P2–3
2	2	P1–4	P2–4
3	1	P1–5	P2–5
3	2	P1–6	P2–6
4	1	P1–7	P2–7
4	2	P1–8	P2–8
		W902 CP2 Duplex Jack (P1)	UD71 E1 (IN) (P2)
1		P1–1	P2–1
2		P1–2	P2–2
3		P1–3	P2–3
4		P1–4	P2–4
OR			
1		P1–1	P2–4
2		P1–2	P2–3
3		P1–3	P2–2

* NWS Systems Only
** FAA Redundant Systems Only
*** DoD and FAA Redundant Systems Only
**** DoD Systems Only
***** FAA Redundant Systems and NWS Redundant Systems Only
******NWS Systems and DoD Systems Only

Table 7–1. Running Wire List – Continued

Conductor No.	Conductor Aux.	FROM	TO
		W902	
		CP2 Duplex Jack (P1)	UD71 E1 (IN) (P2)
4		P1–4	P2–1
		W910 ******	
		UD71 CP1 Duplex Jack (P1)	UD34 A9A3 (P2)
1		P1–1	P2–1
2		P1–2	P2–2
3		P1–3	P2–3
4		P1–4	P2–4
OR			
1		P1–1	P2–4
2		P1–2	P2–3
3		P1–3	P2–2
4		P1–4	P2–1
		32W1 *	
		UD32 A3 Port1 (P1) (NWS Redundant only)	UD32 A2A1 (P2)
1	1	P1–1	P2–1
1	2	P1–2	P2–2
2	1	P1–3	P2–3
2	2	P1–7	P2–7
3	1	P1–5	P2–5
3	2	P1–6	P2–6
4	1	P1–4	P2–4
4	2	P1–20	P2–20
5	1	P1–8	P2–8
5	2	P1–17	P2–15
SHLD		P1–GND	P2–GND
		32W2 *	
		UD32 A3 Port2 (P1) (NWS Redundant only)	UD32 A2A2 (P2)
1	1	P1–1	P2–1
1	2	P1–2	P2–2

* NWS Systems Only
** FAA Redundant Systems Only
*** DoD and FAA Redundant Systems Only
**** DoD Systems Only
***** FAA Redundant Systems and NWS Redundant Systems Only
****** NWS Systems and DoD Systems Only

Table 7–1. Running Wire List – Continued

Conductor No.	Conductor Aux.	FROM	TO
		32W2 *	
		UD32 A3 Port2 (P1) (NWS Redundant only)	UD32 A2A2 (P2)
2	1	P1–3	P2–3
2	2	P1–7	P2–7
3	1	P1–5	P2–5
3	2	P1–6	P2–6
4	1	P1–4	P2–4
4	2	P1–20	P2–20
5	1	P1–8	P2–8
5	2	P1–17	P2–15
SHLD		P1–GND	P2–GND
		32W3 *	
		UD32 A3 Port3 (P1) (NWS Redundant only)	UD32 A2B1 (P2)
1	1	P1–1	P2–1
1	2	P1–2	P2–2
2	1	P1–3	P2–3
2	2	P1–7	P2–7
3	1	P1–5	P2–5
3	2	P1–6	P2–6
4	1	P1–4	P2–4
4	2	P1–20	P2–20
5	1	P1–8	P2–8
5	2	P1–17	P2–15
SHLD		P1–GND	P2–GND
		32W4 *	
		UD32 A3 Port4 (P1) (NWS Redundant only)	UD32 A2B2 (P2)
1	1	P1–1	P2–1
1	2	P1–2	P2–2
2	1	P1–3	P2–3
2	2	P1–7	P2–7
3	1	P1–5	P2–5
3	2	P1–6	P2–6

* NWS Systems Only
** FAA Redundant Systems Only
*** DoD and FAA Redundant Systems Only
**** DoD Systems Only
***** FAA Redundant Systems and NWS Redundant Systems Only
******NWS Systems and DoD Systems Only

Table 7–1. Running Wire List – Continued

Conductor No.	Conductor Aux.	FROM		TO
			32W4 *	
		UD32 A3 Port4 (P1) (NWS Redundant only)		UD32 A2B2 (P2)
4	1	P1–4		P2–4
4	2	P1–20		P2–20
5	1	P1–8		P2–8
5	2	P1–17		P2–15
SHLD		P1–GND		P2–GND
			32W7 *	UD32 A3 TRUNK 1 (P2)
		UD32 A4 DTE (P1) (NWS Redundant only)		
1	1	P1–1		P2–1
1	2	P1–2		P2–2
2	1	P1–3		P2–3
2	2	P1–7		P2–7
3	1	P1–5		P2–5
3	2	P1–6		P2–6
4	1	P1–4		P2–4
4	2	P1–20		P2–20
5	1	P1–8		P2–8
5	2	P1–17		P2–17
6	1	P1–15		P2–15
6	2	P1–19		P2–19
SHLD		P1–GND		P2–GND
			32W900	
		UD32E1 (OUT) (P1)		UD32A9A3 TELCO (P2)
			32W905 *	
		UD32 A2C1 (P1) (NWS Redundant only)		UD32CP1 (P2) (32CP1 is attached to UD32A9 CPU Comm Port B)
1	1	P1–1		P2–1
1	2	P1–2		P2–2

* NWS Systems Only
** FAA Redundant Systems Only
*** DoD and FAA Redundant Systems Only
**** DoD Systems Only
***** FAA Redundant Systems and NWS Redundant Systems Only
****** NWS Systems and DoD Systems Only

Table 7–1. Running Wire List – Continued

Conductor No.	Conductor Aux.	FROM	TO
		32W905 *	
		UD32 A2C1 (P1) (NWS Redundant only)	UD32CP1 (P2) (32CP1 is attached to UD32A9 CPU Comm Port B)
2	1	P1–3	P2–3
2	2	P1–7	P2–7
3	1	P1–5	P2–5
3	2	P1–6	P2–6
4	1	P1–4	P2–4
4	2	P1–20	P2–20
5	1	P1–8	P2–8
5	2	P1–17	P2–15
SHLD		P1–GND	P2–GND
		32W906 *	
		UD32 A2C2 (P1) (NWS Redundant only)	UD32 A12(P2) (32A12 is attached to UD32A9 CPU Comm Port A)
1	1	P1–1	P2–1
1	2	P1–2	P2–3
2	1	P1–3	P2–2
2	2	P1–7	P2–7
3	1	P1–6	P2–20
3	2	P1–8	P2–4
4	1	P1–20	P2–6
4	2	P1–17	P2–17
SHLD		P1–GND	P2–GND
5		P1–6	P1–4
6		P2–20	P2–8
		70/170W8 *	
		UD70 J5 (P1)	UD70 A20J1 (P2)
1	1	P1–4	P2–4
1	2	P1–22	P2–22
2	1	P1–6	P2–6
2	2	P1–24	P2–24

* NWS Systems Only
** FAA Redundant Systems Only
*** DoD and FAA Redundant Systems Only
**** DoD Systems Only
***** FAA Redundant Systems and NWS Redundant Systems Only
******NWS Systems and DoD Systems Only

Table 7–1. Running Wire List – Continued

Conductor No.	Conductor Aux.	FROM	TO
		70/170W8 *	
		UD70 J5 (P1)	UD70 A20J1 (P2)
3	1	P1–7	P2–7
3	2	P1–25	P2–25
4	1	P1–9	P2–9
4	2	P1–27	P2–27
5	1	P1–11	P2–11
5	2	P1–29	P2–29
6	1	P1–13	P2–13
6	2	P1–31	P2–31
7	1	P1–5	P2–5
7	2	P1–23	P2–23
8	1	P1–8	P2–8
8	2	P1–26	P2–26
9	1	P1–12	P2–12
9	2	P1–30	P2–30
10	1	P1–17	P2–17
10	2	P1–35	P2–35
11	1	P1–1	P2–1
11	2	P1–36	P2–36
12	1	P1–19	P2–19
12	2	P1–37	P2–37
13	1	P1–15	P2–15
13	2	P1–18	P2–18
14	1	P1–2	P2–2
14	2	P1–20	P2–20
15	1	P1–33	P2–33
15	2	P1–34	P2–34
SHLD		P1–GND	P2–GND
		70/170W19	
		UD70/170 A27J1 (OUT) (P1)	UD70/170 A25J25 (P2)
1	1	P1–2	P2–1
1	2	P1–27	P2–26
2	1	P1–1	P2–2

* NWS Systems Only
** FAA Redundant Systems Only
*** DoD and FAA Redundant Systems Only
**** DoD Systems Only
***** FAA Redundant Systems and NWS Redundant Systems Only
******NWS Systems and DoD Systems Only

Table 7–1. Running Wire List – Continued

Conductor		FROM	TO
No.	Aux.		
		70/170W19	
		UD70/170 A27J1 (OUT) (P1)	UD70/170 A25J25 (P2)
2	2	P1–26	P2–27
3	1	P1–4	P2–3
3	2	P1–29	P2–28
4	1	P1–3	P2–4
4	2	P1–28	P2–29
5	1	P1–6	P2–5
5	2	P1–31	P2–30
6	1	P1–5	P2–6
6	2	P1–30	P2–31
7	1	P1–8	P2–7
7	2	P1–33	P2–32
8	1	P1–7	P2–8
8	2	P1–32	P2–33
9	1	P1–10	P2–9
9	2	P1–35	P2–34
10	1	P1–9	P2–10
10	2	P1–34	P2–35
11	1	P1–12	P2–11
11	2	P1–37	P2–36
12	1	P1–11	P2–12
12	2	P1–36	P2–37
13	1	P1–14	P2–13
13	2	P1–39	P2–38
14	1	P1–13	P2–14
14	2	P1–38	P2–39
15	1	P1–16	P2–15
15	2	P1–41	P2–40
16	1	P1–15	P2–16
16	2	P1–40	P2–41
17	1	P1–18	P2–17
17	2	P1–43	P2–42
18	1	P1–17	P2–18
18	2	P1–42	P2–43

* NWS Systems Only
** FAA Redundant Systems Only
*** DoD and FAA Redundant Systems Only
**** DoD Systems Only
***** FAA Redundant Systems and NWS Redundant Systems Only
******NWS Systems and DoD Systems Only

Table 7–1. Running Wire List – Continued

Conductor No.	Conductor Aux.	FROM	TO
		70/170W19	
		UD70/170 A27J1 (OUT) (P1)	UD70/170 A25J25 (P2)
19	1	P1–20	P2–19
19	2	P1–45	P2–44
20	1	P1–19	P2–20
20	2	P1–44	P2–45
21	1	P1–22	P2–21
21	2	P1–47	P2–46
22	1	P1–21	P2–22
22	2	P1–46	P2–47
23	1	P1–24	P2–23
23	2	P1–49	P2–48
24	1	P1–23	P2–24
24	2	P1–48	P2–49
25	1	P1–25	P2–25
25	2	P1–50	P2–50
SHLD		E101	SHLD A
		E102	SHLD B
		P1–GND	E101
		P2–GND	E102
		70/170W20	
		UD70/170 A27J2 (IN) (P1)	UD70/170 J1 (P2)
1	1	P1–1	P2–1
1	2	P1–3	P2–3
2	1	P1–2	P2–2
2	2	P1–4	P2–4
3	1	P1–5	P2–5
3	2	P1–7	P2–7
4	1	P1–6	P2–6
4	2	P1–8	P2–8
5	1	P1–9	P2–9
5	2	P1–11	P2–11
6	1	P1–10	P2–10

* NWS Systems Only
** FAA Redundant Systems Only
*** DoD and FAA Redundant Systems Only
**** DoD Systems Only
***** FAA Redundant Systems and NWS Redundant Systems Only
******NWS Systems and DoD Systems Only

Table 7–1. Running Wire List – Continued

Conductor		FROM	TO
No.	Aux.		
		70/170W20	
		UD70/170 A27J2 (IN) (P1)	UD70/170 J1 (P2)
6	2	P1–12	P2–12
7	1	P1–13	P2–13
7	2	P1–15	P2–15
8	1	P1–14	P2–14
8	2	P1–16	P2–16
9	1	P1–17	P2–17
9	2	P1–19	P2–19
10	1	P1–18	P2–18
10	2	P1–20	P2–20
11	1	P1–21	P2–21
11	2	P1–23	P2–23
12	1	P1–22	P2–22
12	2	P1–24	P2–24
13	1	P1–26	P2–26
13	2	P1–28	P2–28
14	1	P1–27	P2–27
14	2	P1–29	P2–29
15	1	P1–30	P2–30
15	2	P1–32	P2–32
16	1	P1–31	P2–31
16	2	P1–33	P2–33
17	1	P1–34	P2–34
17	2	P1–36	P2–36
18	1	P1–35	P2–35
18	2	P1–37	P2–37
19	1	P1–38	P2–38
19	2	P1–40	P2–40
20	1	P1–39	P2–39
20	2	P1–41	P2–41
21	1	P1–42	P2–42
21	2	P1–44	P2–44
22	1	P1–43	P2–43
22	2	P1–45	P2–45

* NWS Systems Only
** FAA Redundant Systems Only
*** DoD and FAA Redundant Systems Only
**** DoD Systems Only
***** FAA Redundant Systems and NWS Redundant Systems Only
******NWS Systems and DoD Systems Only

Table 7–1. Running Wire List – Continued

Conductor No.	Conductor Aux.	FROM	TO
		70/170W20	
		UD70/170 A27J2 (IN) (P1)	UD70/170 J1 (P2)
23	1	P1–46	P2–46
23	2	P1–48	P2–48
24	1	P1–47	P2–47
24	2	P1–49	P2–49
25	1	P1–50	P2–50
25	2	P1–25	P2–25
SHLD		P2–GND	
		E101	SHLD
		P1–GND	E101
		70/170W21	
		UD70/170 A26J1 (OUT) (P1)	UD70/170 A25J26 (P2)
1	1	P1–2	P2–1
1	2	P1–27	P2–26
2	1	P1–1	P2–2
2	2	P1–26	P2–27
3	1	P1–4	P2–3
3	2	P1–29	P2–28
4	1	P1–3	P2–4
4	2	P1–28	P2–29
5	1	P1–6	P2–5
5	2	P1–31	P2–30
6	1	P1–5	P2–6
6	2	P1–30	P2–31
7	1	P1–8	P2–7
7	2	P1–33	P2–32
8	1	P1–7	P2–8
8	2	P1–32	P2–33
9	1	P1–10	P2–9
9	2	P1–35	P2–34
10	1	P1–9	P2–10
10	2	P1–34	P2–35

* NWS Systems Only
** FAA Redundant Systems Only
*** DoD and FAA Redundant Systems Only
**** DoD Systems Only
***** FAA Redundant Systems and NWS Redundant Systems Only
******NWS Systems and DoD Systems Only

Table 7–1. Running Wire List – Continued

Conductor No.	Conductor Aux.	FROM	TO
		70/170W21	
		UD70/170 A26J1 (OUT) (P1)	UD70/170 A25J26 (P2)
11	1	P1–12	P2–11
11	2	P1–37	P2–36
12	1	P1–11	P2–12
12	2	P1–36	P2–37
13	1	P1–14	P2–13
13	2	P1–39	P2–38
14	1	P1–13	P2–14
14	2	P1–38	P2–39
15	1	P1–16	P2–15
15	2	P1–41	P2–40
16	1	P1–15	P2–16
16	2	P1–40	P2–41
17	1	P1–18	P2–17
17	2	P1–43	P2–42
18	1	P1–17	P2–18
18	2	P1–42	P2–43
19	1	P1–20	P2–19
19	2	P1–45	P2–44
20	1	P1–19	P2–20
20	2	P1–44	P2–45
21	1	P1–22	P2–21
21	2	P1–47	P2–46
22	1	P1–21	P2–22
22	2	P1–46	P2–47
23	1	P1–24	P2–23
23	2	P1–49	P2–48
24	1	P1–23	P2–24
24	2	P1–48	P2–49
25	1	P1–25	P2–25
25	2	P1–50	P2–50
SHLD		E101	SHLD A
		E102	SHLD B
		P1–GND	E101

* NWS Systems Only
** FAA Redundant Systems Only
*** DoD and FAA Redundant Systems Only
**** DoD Systems Only
***** FAA Redundant Systems and NWS Redundant Systems Only
******NWS Systems and DoD Systems Only

Table 7–1. Running Wire List – Continued

Conductor No.	Conductor Aux.	FROM	TO
		70/170W21	
		UD70/170 A26J1 (OUT) (P1)	UD70/170 A25J26 (P2)
		P2–GND	E102
		70/170W22	
		UD70/170 A26J2 (IN) (P1)	UD70/170 J3 (P2)
1	1	P1–1	P2–1
1	2	P1–3	P2–3
2	1	P1–2	P2–2
2	2	P1–4	P2–4
3	1	P1–5	P2–5
3	2	P1–7	P2–7
4	1	P1–6	P2–6
4	2	P1–8	P2–8
5	1	P1–9	P2–9
5	2	P1–11	P2–11
6	1	P1–10	P2–10
6	2	P1–12	P2–12
7	1	P1–13	P2–13
7	2	P1–15	P2–15
8	1	P1–14	P2–14
8	2	P1–16	P2–16
9	1	P1–17	P2–17
9	2	P1–19	P2–19
10	1	P1–18	P2–18
10	2	P1–20	P2–20
11	1	P1–21	P2–21
11	2	P1–23	P2–23
12	1	P1–22	P2–22
12	2	P1–24	P2–24
13	1	P1–26	P2–26
13	2	P1–28	P2–28
14	1	P1–27	P2–27
14	2	P1–29	P2–29

* NWS Systems Only
** FAA Redundant Systems Only
*** DoD and FAA Redundant Systems Only
**** DoD Systems Only
***** FAA Redundant Systems and NWS Redundant Systems Only
******NWS Systems and DoD Systems Only

Table 7–1. Running Wire List – Continued

Conductor No.	Conductor Aux.	FROM	TO
		70/170W22	
		UD70/170 A26J2 (IN) (P1)	UD70/170 J3 (P2)
15	1	P1–30	P2–30
15	2	P1–32	P2–32
16	1	P1–31	P2–31
16	2	P1–33	P2–33
17	1	P1–34	P2–34
17	2	P1–36	P2–36
18	1	P1–35	P2–35
18	2	P1–37	P2–37
19	1	P1–38	P2–38
19	2	P1–40	P2–40
20	1	P1–39	P2–39
20	2	P1–41	P2–41
21	1	P1–42	P2–42
21	2	P1–44	P2–44
22	1	P1–43	P2–43
22	2	P1–45	P2–45
23	1	P1–46	P2–46
23	2	P1–48	P2–48
24	1	P1–47	P2–47
24	2	P1–49	P2–49
25	1	P1–50	P2–50
25	2	P1–25	P2–25
SHLD		P2–GND	
		E101	SHLD
		P1–GND	E101
		70/170W31	
		UD70/170 J23 PWR STRP (P1)	UD70/170 B1 (P2) UD70/170 B2 (P3)
1		P1–W	E102
2		P1–BK	E101
1		E101	P2 (LINE)
2		E102	P2 (NEUTRAL)

* NWS Systems Only
** FAA Redundant Systems Only
*** DoD and FAA Redundant Systems Only
**** DoD Systems Only
***** FAA Redundant Systems and NWS Redundant Systems Only
****** NWS Systems and DoD Systems Only

Table 7–1. Running Wire List – Continued

Conductor No.	Conductor Aux.	FROM	TO
		70/170W31	
		UD70/170 J23 PWR STRP (P1)	UD70/170 B1 (P2) UD70/170 B2 (P3)
1		E101	P3 (LINE)
2		E102	P3 (NEUTRAL)
		70/170W32	
		UD70/170 A24 TELCO (P1)	UD70/170 A23J1 (OUT) (P2)
1	1	P1–1	P2–1
1	2	P1–26	P2–26
2	1	P1–2	P2–2
2	2	P1–27	P2–27
3	1	P1–3	P2–3
3	2	P1–28	P2–28
4	1	P1–4	P2–4
4	2	P1–29	P2–29
5	1	P1–5	P2–5
5	2	P1–30	P2–30
6	1	P1–6	P2–6
6	2	P1–31	P2–31
7	1	P1–7	P2–7
7	2	P1–32	P2–32
8	1	P1–8	P2–8
8	2	P1–33	P2–33
9	1	P1–9	P2–9
9	2	P1–34	P2–34
10	1	P1–10	P2–10
10	2	P1–35	P2–35
11	1	P1–11	P2–11
11	2	P1–36	P2–36
12	1	P1–12	P2–12
12	2	P1–37	P2–37
13	1	P1–13	P2–13
13	2	P1–38	P2–38
14	1	P1–14	P2–14

* NWS Systems Only
** FAA Redundant Systems Only
*** DoD and FAA Redundant Systems Only
**** DoD Systems Only
***** FAA Redundant Systems and NWS Redundant Systems Only
******NWS Systems and DoD Systems Only

Table 7–1. Running Wire List – Continued

Conductor No.	Conductor Aux.	FROM	TO
		70/170W32	
		UD70/170 A24 TELCO (P1)	UD70/170 A23J1 (OUT) (P2)
14	2	P1–39	P2–39
15	1	P1–15	P2–15
15	2	P1–40	P2–40
16	1	P1–16	P2–16
16	2	P1–41	P2–41
17	1	P1–17	P2–17
17	2	P1–42	P2–42
18	1	P1–18	P2–18
18	2	P1–43	P2–43
19	1	P1–19	P2–19
19	2	P1–44	P2–44
20	1	P1–20	P2–20
20	2	P1–45	P2–45
21	1	P1–21	P2–21
21	2	P1–46	P2–46
22	1	P1–22	P2–22
22	2	P1–47	P2–47
23	1	P1–23	P2–23
23	2	P1–48	P2–48
24	1	P1–24	P2–24
24	2	P1–49	P2–49
25	1	P1–25	P2–25
25	2	P1–50	P2–50
SHLD	A	SHLD	E101
	B	SHLD	E102
		E101	P1–GND
		E102	P2–GND
		70/170W33	
		UD70/170 A23J2 (IN) (P1)	UD70/170 J2 (P2)
1	1	P1–1	P2–1
1	2	P1–26	P2–26

* NWS Systems Only
** FAA Redundant Systems Only
*** DoD and FAA Redundant Systems Only
**** DoD Systems Only
***** FAA Redundant Systems and NWS Redundant Systems Only
****** NWS Systems and DoD Systems Only

Table 7–1. Running Wire List – Continued

Conductor No.	Conductor Aux.	FROM	TO
		70/170W33	
		UD70/170 A23J2 (IN) (P1)	UD70/170 J2 (P2)
2	1	P1–2	P2–2
2	2	P1–27	P2–27
3	1	P1–3	P2–3
3	2	P1–28	P2–28
4	1	P1–4	P2–4
4	2	P1–29	P2–29
5	1	P1–5	P2–5
5	2	P1–30	P2–30
6	1	P1–6	P2–6
6	2	P1–31	P2–31
7	1	P1–7	P2–7
7	2	P1–32	P2–32
8	1	P1–8	P2–8
8	2	P1–33	P2–33
9	1	P1–9	P2–9
9	2	P1–34	P2–34
10	1	P1–10	P2–10
10	2	P1–35	P2–35
11	1	P1–11	P2–11
11	2	P1–36	P2–36
12	1	P1–12	P2–12
12	2	P1–37	P2–37
13	1	P1–13	P2–13
13	2	P1–38	P2–38
14	1	P1–14	P2–14
14	2	P1–39	P2–39
15	1	P1–15	P2–15
15	2	P1–40	P2–40
16	1	P1–16	P2–16
16	2	P1–41	P2–41
17	1	P1–17	P2–17
17	2	P1–42	P2–42
18	1	P1–18	P2–18

* NWS Systems Only
** FAA Redundant Systems Only
*** DoD and FAA Redundant Systems Only
**** DoD Systems Only
***** FAA Redundant Systems and NWS Redundant Systems Only
******NWS Systems and DoD Systems Only

Table 7–1. Running Wire List – Continued

Conductor No.	Conductor Aux.	FROM		TO
			70/170W33	
		UD70/170 A23J2 (IN) (P1)		UD70/170 J2 (P2)
18	2	P1–43		P2–43
19	1	P1–19		P2–19
19	2	P1–44		P2–44
20	1	P1–20		P2–20
20	2	P1–45		P2–45
21	1	P1–21		P2–21
21	2	P1–46		P2–46
22	1	P1–22		P2–22
22	2	P1–47		P2–47
23	1	P1–23		P2–23
23	2	P1–48		P2–48
24	1	P1–24		P2–24
24	2	P1–49		P2–49
25	1	P1–25		P2–25
25	2	P1–50		P2–50
A		E101		SHLD
		P2–GND		SHLD
		P2–GND		E101
			70/170W50	
		Plug (P1)	through W80 (Site Dependent)	Power Cords Socket (P2)
1		P1–Hot		P2–Hot
2		P1–Neutral		P2–Neutral
3		P1–Ground		P2–Ground
			70/170W81*	
		UD70/170J23 AC/DC CONVERTER (P1)		UD70/170 A18 POWER (P2)
1	1	P1–Red		P2–1 (+V)
1	2	P1–Green		P2–2 (GND)
2	1	P1–Black		P2–3 (–V)

* NWS Systems Only
** FAA Redundant Systems Only
*** DoD and FAA Redundant Systems Only
**** DoD Systems Only
***** FAA Redundant Systems and NWS Redundant Systems Only
******NWS Systems and DoD Systems Only

Table 7–1. Running Wire List – Continued

Conductor No.	Conductor Aux.	FROM		TO
		UD70/170 A19 TELCO (P1)	70/170W86 *	UD70/170 J20 (P2)
1		RXA		J20–1
2		RXB		J20–2
SHLD				J20–GND
		(P1)	70/170W100 through W148 (Site Dependent)	TELCO Modem–to–Adapter Panel Cables (P2)
1		P1–1		P2–1
2		P1–2		P2–2
3		P1–3		P2–3
4		P1–4		P2–4
5		P1–5		P2–5
6		P1–6		P2–6
7		P1–7		P2–7
8		P1–8		P2–8
		UD70/170 TB2–1 (P1) UD70/170 TB2–4 (P2)	70/170W149 **	UD70/170 PS1V+ (P3) UD70/170 PS1V– (P4)
1		P1–1		P3 (V+)
2		P2–4		P4 (V–)
		UD70/170 J23 PWR STRP (P1)	70/170W150 **	UD70/170 PS1 (P2)
1		P1–W		P2–N2
2		P1–BK		P2–L1
3		P1–R		P2–GND
		UD70/170 J22 (P1)	70/170W151 **	UD70/170 TB2 (P2)
1	1	P1–1		P2–1
1	2	P1–2		P2–4
2	1	P1–3		P2–2

* NWS Systems Only
** FAA Redundant Systems Only
*** DoD and FAA Redundant Systems Only
**** DoD Systems Only
***** FAA Redundant Systems and NWS Redundant Systems Only
****** NWS Systems and DoD Systems Only

Table 7–1. Running Wire List – Continued

Conductor No.	Conductor Aux.	FROM		TO
			70/170W151 **	
		UD70/170 J22 (P1)		UD70/170 TB2 (P2)
2	2	P1–4		P2–5
3	1	P1–5		P2–2
3	2	P1–6		P2–5
4	1	P1–7		P2–3
4	2	P1–8		P2–6
5	1	P1–9		P2–3
5	2	P1–10		P2–6
6	1			
6	2			
SHLD		P1–GND		
		(Site Dependent) (P1)	70/170W200 through W249	LAN TYPE CABLES (BLUE) (P2)
1	1	P1–1		P2–1
1	2	P1–2		P2–2
2	1	P1–3		P2–3
2	2	P1–6		P2–6
3	1	P1–4		P2–4
3	2	P1–5		P2–5
4	1	P1–7		P2–7
4	2	P1–8		P2–8
			70/170W250 ***	
		UD70/170 A7A3 (PCI Slot 2) Port 0 (P2)		UD70/170 J17 (P1) with RJ–45 to DB15(F) adapter. Pinouts shown after passing through adapter to DB15(F) on P1 side.
1	1	P2–1		P1–4
1	2	P2–2		P1–15
2	1	P2–3		P1–12
2	2	P2–6		P1–11
3	1	P2–4		P1–3

* NWS Systems Only
** FAA Redundant Systems Only
*** DoD and FAA Redundant Systems Only
**** DoD Systems Only
***** FAA Redundant Systems and NWS Redundant Systems Only
****** NWS Systems and DoD Systems Only

Table 7–1. Running Wire List – Continued

Conductor No.	Conductor Aux.	FROM	TO
		70/170W250 ***	
		UD70/170 A7A3 (PCI Slot 2) Port 0 (P2)	UD70/170 J17 (P1) with RJ–45 to DB15(F) adapter. Pinouts shown after passing through adapter to DB15(F) on P1 side.
3	2	P2–5	P1–2
4	1	P2–7	P1–14
4	2	P2–8	P1–13
		70/170W251	
		UD70/170 A7A3 (PCI Slot 2) Port 1 (P2)	UD70/170 J7 (P1) with RJ–45 to DB25(F) adapter. Pinouts shown after passing through adapter to DB25(F) on P1 side.
1	1	P2–1	P1–8
1	2	P2–2	P1–7
2	1	P2–3	P1–6
2	2	P2–6	P1–3
3	1	P2–4	P1–5
3	2	P2–5	P1–20
4	1	P2–7	P1–2
4	2	P2–8	P1–4
		70/170W252 **	
		UD70/170 A7A3 (PCI Slot 2) Port 2 (P2)	UD70/170 J15 (P1) with RJ–45 to DB25(F) adapter. Pinouts shown after passing through adapter to DB25(F) on P1 side.
1	1	P2–1	P1–20
1	1	P2–1	P1–20
1	2	P2–2	P1–7

* NWS Systems Only
** FAA Redundant Systems Only
*** DoD and FAA Redundant Systems Only
**** DoD Systems Only
***** FAA Redundant Systems and NWS Redundant Systems Only
****** NWS Systems and DoD Systems Only

Table 7–1. Running Wire List – Continued

Conductor No.	Conductor Aux.	FROM	TO
		70/170W252 **	
		UD70/170 A7A3 (PCI Slot 2) Port 2 (P2)	UD70/170 J15 (P1) with RJ–45 to DB25(F) adapter. Pinouts shown after passing through adapter to DB25(F) on P1 side.
2	1	P2–3	P1–20
2	2	P2–6	P1–2
3	1	P2–4	P1–4
3	2	P2–5	P1–6
4	1	P2–7	P1–3
4	2	P1–8	P2–5
5		P2–6	P2–8
		70/170W253	
		UD70/170 A7A3 (PCI Slot 2) Port 3 (P2)	UD70/170 J8 (P1) with RJ–45 to DB25(M) adapter. Pinouts shown after passing through adapter to DB25(M) on P1 side.
1	1	P2–1	P1–8
1	2	P2–2	P1–7
2	1	P2–3	P1–6
2	2	P2–6	P1–3
3	1	P2–4	P1–5
3	2	P2–5	P1–20
4	1	P2–7	P1–2
4	2	P2–8	P1–4
		70/170W254	
		UD70/170 A2 AUX(P2)	UD70/170 CP14 RJ–45 jack (P1). CP14 follows.
1		P2–1	P1–8
2		P2–2	P1–7
3		P2–3	P1–6

* NWS Systems Only
** FAA Redundant Systems Only
*** DoD and FAA Redundant Systems Only
**** DoD Systems Only
***** FAA Redundant Systems and NWS Redundant Systems Only
****** NWS Systems and DoD Systems Only

Table 7–1. Running Wire List – Continued

Conductor No.	Conductor Aux.	FROM	TO
		70/170W254	
		UD70/170 A2 AUX(P2)	UD70/170 CP14 RJ–45 jack (P1). CP14 follows.
4		P2–4	P1–5
5		P2–5	P1–4
6		P2–6	P1–3
7		P2–7	P1–2
8		P2–8	P1–1
		CP14	
		(Cisco Adapter 74–0495–01) DB15(F) connected at UD70/170 A10 Serial Port	RJ–45 jack connected to UD70/170W254 P1
1		P2–7	P1–1
2		P2–4	P1–2
3		P2–3	P1–3
4		P2–5	P1–4
5		P2–5	P1–5
6		P2–2	P1–6
7		P2–6	P1–7
8		P2–8	P1–8
		70/170W255	
		UD70/170 A7J7 (SERIAL PORT B) (P2)	UD70/170 A11 SERIAL PORT (P1)
1		P2–2	P1–2
2		P2–3	P1–1
3		P2–5	P1–9
4		P2–1	P2–4
5		P2–7	P2–8
SHLD		P2–GND	P1–GND

* NWS Systems Only
** FAA Redundant Systems Only
*** DoD and FAA Redundant Systems Only
**** DoD Systems Only
***** FAA Redundant Systems and NWS Redundant Systems Only
******NWS Systems and DoD Systems Only

Table 7–1. Running Wire List – Continued

Conductor No.	Conductor Aux.	FROM	TO
		70/170W256 ***	
		UD70/170 A12A1 WAN B (P1)	UD70/170 J19 (P2) with RJ–45 to DB15(F) adapter. Pinouts shown after passing through adapter to DB15(F) on P2 side.
1	1	P1–1	P2–2
1	2	P1–2	P2–10
2	1	P1–4	P2–9
2	2	P1–5	P2–1
3	1	SPARE	
3	2	SPARE	
4	1	SPARE	
4	2	SPARE	
		70/170W257 *	
		UD70/170 A7J3 (P1) (Sun serial port A)	UD70/170 A19J1 (P2) SHM, DTE
1	1	P1–2	P2–2
1	2	P1–14	P2–14
2	1	P1–3	P2–3
2	2	P1–16	P2–16
3	1	P1–4	P2–4
3	2	P1–19	P2–19
4	1	P1–5	P2–5
4	2	P1–13	P2–13
5	1	P1–6	P2–6
5	2	P1–22	P2–22
6	1	P1–20	P2–20
6	2	P1–23	P2–23
7	1	P1–8	P2–8
7	2	P1–10	P2–10
8	1	P1–15	P2–15
8	2	P1–12	P2–12
9	1	P1–9	P2–9

* NWS Systems Only
** FAA Redundant Systems Only
*** DoD and FAA Redundant Systems Only
**** DoD Systems Only
***** FAA Redundant Systems and NWS Redundant Systems Only
****** NWS Systems and DoD Systems Only

Table 7–1. Running Wire List – Continued

Conductor No.	Conductor Aux.	FROM	TO
		70/170W257 *	
		UD70/170 A7J3 (P1) (Sun serial port A)	UD70/170 A19J1 (P2) SHM, DTE
9	2	P1–17	P2–17
10		P1–7	P2–7
11		P1–18	P2–18
12		P1–21	P2–21
13		P1–24	P2–24
14		P1–11	P2–11
15		P1–25	P2–25
16		P1–1	P2–1
SHLD		P1–GND	P2–GND
		70/170W258 *	
		UD70/170 A12 WAN B (P1)	UD70/170 A18 DTE (P2)
1	1	P1–1	P2–1
1	2	P1–2	P2–2
2	1	P1–3	P2–3
2	2	P1–6	P2–6
3	1	P1–4	P2–4
3	2	P1–5	P2–5
4	1	P1–7	P2–7
4	2	P1–8	P2–8
		70/170W259 *	
		UD70/170 A18 NET (P1)	UD70/170 J19 (P2) with RJ–45 to DB15(F) adapter. Pinouts shown after passing through adapter to DB15(F) on P2 side.
1	1	P1–1	P2–2
1	2	P1–2	P2–10
2	1	P1–4	P2–9
2	2	P1–5	P2–1
3	1	SPARE	

* NWS Systems Only
** FAA Redundant Systems Only
*** DoD and FAA Redundant Systems Only
**** DoD Systems Only
***** FAA Redundant Systems and NWS Redundant Systems Only
******NWS Systems and DoD Systems Only

Table 7–1. Running Wire List – Continued

Conductor No.	Conductor Aux.	FROM	TO
		70/170W259 *	
		UD70/170 A18 NET (P1)	UD70/170 J19 (P2) with RJ–45 to DB15(F) adapter. Pinouts shown after passing through adapter to DB15(F) on P2 side.
3	2	SPARE	
4	1	SPARE	
4	2	SPARE	
		70/170W261	
		UD70/170A2A1A1W0T 1	UD70/170CP11
		70/170W263 **	
		UD70/170 CP2 (P1)	UD70/170 A28J1 (EIA–232) (P2)
1	1	P1–1	P2–1
1	2	P1–2	P2–2
2	1	P1–3	P2–3
2	2	P1–6	P2–6
3	1	P1–4	P2–4
3	2	P1–5	P2–5
4	1	P1–7	P2–7
4	2	P1–8	P2–8
		70/170W264 **	
		UD70/170 CP3 (P1)	UD70/170 A29J1 (EIA–232) (P2)
1	1	P1–1	P2–1
1	2	P1–2	P2–2
2	1	P1–3	P2–3
2	2	P1–6	P2–6
3	1	P1–4	P2–4
3	2	P1–5	P2–5
4	1	P1–7	P2–7

* NWS Systems Only
** FAA Redundant Systems Only
*** DoD and FAA Redundant Systems Only
**** DoD Systems Only
***** FAA Redundant Systems and NWS Redundant Systems Only
****** NWS Systems and DoD Systems Only

Table 7–1. Running Wire List – Continued

Conductor		FROM		TO
No.	Aux.			
		UD70/170 CP3 (P1)	70/170W264 **	UD70/170 A29J1 (EIA–232) (P2)
4	2	P1–8		P2–8
		UD70/170 A14A21 DTE A (P2) UD70/170 A14A17 DTE A (P2) UD70/170 A14A18 DTE A (P2) UD70/170 A14A19 DTE A (P2) UD70/170 A14A20 DTE A (P2) UD70/170 A14A3 DTE B (P2) UD70/170 A14A4 DTE A (P2) UD70/170 A14A4 DTE B (P2)	70/170W265, and W291 through W297	UD70/170 A2A2 Port 0 (P1) UD70/170 A2A2 Port 1 (P1) UD70/170 A2A2 Port 2 (P1) UD70/170 A2A2 Port 3 (P1) UD70/170 A2A2 Port 4 (P1) UD70/170 A2A2 Port 5 (P1) UD70/170 A2A2 Port 6 (P1) UD70/170 A2A2 Port 7 (P1) Pin Numbers: Row 1 & 3, Left to right Rows 2 & 4, right to left
1	1	P2–7		P1–45
1	2	P2–		P1–
2	1	P2–18		P1–44
2	2	P2–		P1–
3	1	P2–20		P1–43
3	2	P2–		P1–
4	1	P2–4		P1–42
4	2	P2–		P1–
5	1	P2–2		P1–41
5	2	P2–		P1–
6	1	P2–24		P1–39
6	2	P2–		P1–

* NWS Systems Only
** FAA Redundant Systems Only
*** DoD and FAA Redundant Systems Only
**** DoD Systems Only
***** FAA Redundant Systems and NWS Redundant Systems Only
****** NWS Systems and DoD Systems Only

Table 7–1. Running Wire List – Continued

Conductor		FROM		TO
No.	Aux.			
		UD70/170 A14A21 DTE A (P2) UD70/170 A14A17 DTE A (P2) UD70/170 A14A18 DTE A (P2) UD70/170 A14A19 DTE A (P2) UD70/170 A14A20 DTE A (P2) UD70/170 A14A3 DTE B (P2) UD70/170 A14A4 DTE A (P2) UD70/170 A14A4 DTE B (P2)	70/170W265, and W291 through W297	UD70/170 A2A2 Port 0 (P1) UD70/170 A2A2 Port 1 (P1) UD70/170 A2A2 Port 2 (P1) UD70/170 A2A2 Port 3 (P1) UD70/170 A2A2 Port 4 (P1) UD70/170 A2A2 Port 5 (P1) UD70/170 A2A2 Port 6 (P1) UD70/170 A2A2 Port 7 (P1) Pin Numbers: Row 1 & 3, Left to right Rows 2 & 4, right to left
7	1	P2–17		P1–38
7	2	P2–		P1–
8	1	P2–15		P1–37
8	2	P2–		P1–
9	1	P2–3		P1–36
9	2	P2–		P1–
10	1	P2–5		P1–35
10	2	P2–		P1–
11	1	P2–6		P1–34
11	2	P2–		P1–
12	1	P2–8		P1–33
12	2	P2–		P1–
13		P2–1		P1–46
14		P2–50		P1–51
15		P2–51		P1–52

* NWS Systems Only
** FAA Redundant Systems Only
*** DoD and FAA Redundant Systems Only
**** DoD Systems Only
***** FAA Redundant Systems and NWS Redundant Systems Only
****** NWS Systems and DoD Systems Only

Table 7–1. Running Wire List – Continued

Conductor		FROM		TO
No.	Aux.			
		(Site Dependent) UD70/170 A15, A16, or A17 (P1) Comm Server A, B, or C ports 0 through 7 (Site Dependent) (see Table 7–2, "Comm Server to Modem Rack Interconnections" for specific connections)	70/170W266 through W270 and W274 through W286	UD70/170 A14Ax DTE A or DTE B (P2) Modem, DTE Connectors (see Table 7–2, "Comm Server to Modem Rack Interconnections" for specific connections)
1	1	P1–2		P2–2
1	2	P1–14		P2–14
2	1	P1–3		P2–3
2	2	P1–16		P2–16
3	1	P1–4		P2–4
3	2	P1–19		P2–19
4	1	P1–5		P2–5
4	2	P1–13		P2–13
5	1	P1–6		P2–6
5	2	P1–22		P2–22
6	1	P1–20		P2–20
6	2	P1–23		P2–23
7	1	P1–8		P2–8
7	2	P1–10		P2–10
8	1	P1–15		P2–15
8	2	P1–12		P2–12
9	1	P1–9		P2–9
9	2	P1–17		P2–17
10		P1–7		P2–7
11		P1–18		P2–18
12		P1–21		P2–21
13		P1–24		P2–24
14		P1–11		P2–11
15		P1–25		P2–25
16		P1–1		P2–1

* NWS Systems Only
** FAA Redundant Systems Only
*** DoD and FAA Redundant Systems Only
**** DoD Systems Only
***** FAA Redundant Systems and NWS Redundant Systems Only
******NWS Systems and DoD Systems Only

Table 7–1. Running Wire List – Continued

Conductor No.	Conductor Aux.	FROM		TO
		(Site Dependent) UD70/170 A15, A16, or A17 (P1) Comm Server A, B, or C ports 0 through 7 (Site Dependent) (see Table 7–2, "Comm Server to Modem Rack Interconnections" for specific connections)	70/170W266 through W270 and W274 through W286	UD70/170 A14Ax DTE A or DTE B (P2) Modem, DTE Connectors (see Table 7–2, "Comm Server to Modem Rack Interconnections" for specific connections)
SHLD		P1–GND		P2–GND
		UD70/170 A8 (Bottom SCSI) (P2) with MD68F–MD50M adapter	70/170W301	UD70/170 A7A2 (SCSI Bus A) PCI Slot 1 (P1)
1		P2–6		P1–1
2		P2–7		P1–2
3		P2–8		P1–3
4		P2–9		P1–4
5		P2–10		P1–5
6		P2–11		P1–6
7		P2–12		P1–7
8		P2–13		P1–8
9		P2–14		P1–9
10		P2–15		P1–10
11		P2–16		P1–11
12		P2–17		P1–12
13		P2–18		P1–13
14		P2–19		P1–14
15		P2–20		P1–15
16		P2–21		P1–16
17		P2–22		P1–17
18		P2–23		P1–18
19		P2–24		P1–19

* NWS Systems Only
** FAA Redundant Systems Only
*** DoD and FAA Redundant Systems Only
**** DoD Systems Only
***** FAA Redundant Systems and NWS Redundant Systems Only
****** NWS Systems and DoD Systems Only

Table 7–1. Running Wire List – Continued

Conductor		FROM	TO
No.	Aux.		
		70/170W301	
		UD70/170 A8 (Bottom SCSI) (P2) with MD68F–MD50M adapter	UD70/170 A7A2 (SCSI Bus A) PCI Slot 1 (P1)
20		P2–25	P1–20
21		P2–26	P1–21
22		P2–27	P1–22
23		P2–28	P1–23
24		P2–29	P1–24
25		P2–30	P1–25
26		P2–40	P1–26
27		P2–41	P1–27
28		P2–42	P1–28
29		P2–43	P1–29
30		P2–44	P1–30
31		P2–45	P1–31
32		P2–46	P1–32
33		P2–47	P1–33
34		P2–48	P1–34
35		P2–49	P1–35
36		P2–50	P1–36
37		P2–51	P1–37
38		P2–52	P1–38
39		P2–53	P1–39
40		P2–54	P1–40
41		P2–55	P1–41
42		P2–56	P1–42
43		P2–57	P1–43
44		P2–58	P1–44
45		P2–59	P1–45
46		P2–60	P1–46
47		P2–61	P1–47
48		P2–62	P1–48
49		P2–63	P1–49
50		P2–64	P1–50

* NWS Systems Only
** FAA Redundant Systems Only
*** DoD and FAA Redundant Systems Only
**** DoD Systems Only
***** FAA Redundant Systems and NWS Redundant Systems Only
****** NWS Systems and DoD Systems Only

Table 7–1. Running Wire List – Continued

Conductor No.	Conductor Aux.	FROM		TO
		UD70/170 A8 (Bottom SCSI) (P2) with MD68F–MD50M adapter	70/170W301	UD70/170 A7A2 (SCSI Bus A) PCI Slot 1 (P1)
SHLD		P2–GND		P1–GND
		UD70/170 J12 (P1)	70/170W302 **	UD70/170 A7A5 (PCI Slot 4) (P2)
1	1	P1–1		P2–1
1	2	P1–3		P2–9
2	1	P1–8		P2–11
2	2	P1–6		P2–28
		13W3(M) Connector (P2) to W303A 13W3(F), Mouse DIN Connector to UD70/170 A7A1J1 (P3) (See Figure 7–1 at end of table)	70/170W303 ******	UD70/170 A3 Channel 1 (P1)
1		P3–5		P1–3
2		P3–8		P1–4
3		P3–6		P1–5
4		P3–1		P1–6
5		P2–8		P1–9
6		P2–3		P1–10
7		P2–A3		P1–11
8		P2–A2		P1–12
9		P2–A1		P1–13
10		P2–5		P1–15
11		P3–7		P1–17
12		P3–3		P1–18
13		P2–4		P1–20

* NWS Systems Only
** FAA Redundant Systems Only
*** DoD and FAA Redundant Systems Only
**** DoD Systems Only
***** FAA Redundant Systems and NWS Redundant Systems Only
******NWS Systems and DoD Systems Only

Table 7–1. Running Wire List – Continued

Conductor No.	Conductor Aux.	FROM		TO
		13W3(M) Connector (P2) to W303A 13W3(F), Mouse DIN Connector to UD70/170 A7A1J1 (P3) (See Figure 7–1 at end of table)	70/170W303 ******	UD70/170 A3 Channel 1 (P1)
14		P2–9		P1–22
15		P2–A3 SHLD		P1–23
16		P2–A2 SHLD		P1–24
17		P2–A1 SHLD		P1–25
18		P1–16		P1–4
19		P1–19		P1–17
20		P3–4		P3–3
21		P2–10		P2–4
SHLD		P1–SHLD		P2–SHLD
SHLD		P3–SHLD		P2–SHLD
		Pigtail Adapter 13W3(F) Connector (P1) from W303 13W3(M) (See Figure 7–1 at end of table for example of W303 pinouts)	70/170W303A ******	UD70/170 A7A1J4 (P2), HD15 Connector, Sun Video from RPG
1		P1–A3		P2–3
2		P1–A2		P2–2
3		P1–A1		P2–1
4		P1–5		P2–13
5		P1–4		P2–10
6		P1–9		P2–14
7		P1–A3 SHLD		P2–8
8		P1–A2 SHLD		P2–7
9		P1–A1 SHLD		P2–6
10		P1–10		P2–10

* NWS Systems Only
** FAA Redundant Systems Only
*** DoD and FAA Redundant Systems Only
**** DoD Systems Only
***** FAA Redundant Systems and NWS Redundant Systems Only
******NWS Systems and DoD Systems Only

Table 7–1. Running Wire List – Continued

Conductor No.	Conductor Aux.	FROM		TO
		Pigtail Adapter 13W3(F) Connector (P1) from W303 13W3(M) (See Figure 7–1 at end of table for example of W303 pinouts)	70/170W303A ******	UD70/170 A7A1J4 (P2), HD15 Connector, Sun Video from RPG
11		P1–4		P2–10
SHLD		P1–SHLD		P2–SHLD
		13W3(M) Connector (P2) to W304A 13W3(F), Mouse DIN Connector to UD70/170 A1A1J1 (P3) (See Figure 7–1 at end of table)	70/170W304 ******	UD70/170 A3 Channel 2 (P1)
1		P3–5		P1–3
2		P3–8		P1–4
3		P3–6		P1–5
4		P3–1		P1–6
5		P2–8		P1–9
6		P2–3		P1–10
7		P2–A3		P1–11
8		P2–A2		P1–12
9		P2–A1		P1–13
10		P2–5		P1–15
11		P3–7		P1–17
12		P3–3		P1–18
13		P2–4		P1–20
14		P2–9		P1–22
15		P2–A3 SHLD		P1–23
16		P2–A2 SHLD		P1–24
17		P2–A1 SHLD		P1–25
18		P1–16		P1–4

* NWS Systems Only
** FAA Redundant Systems Only
*** DoD and FAA Redundant Systems Only
**** DoD Systems Only
***** FAA Redundant Systems and NWS Redundant Systems Only
******NWS Systems and DoD Systems Only

Table 7–1. Running Wire List – Continued

Conductor No.	Conductor Aux.	FROM		TO
		13W3(M) Connector (P2) to W304A 13W3(F), Mouse DIN Connector to UD70/170 A1A1J1 (P3) (See Figure 7–1 at end of table)	70/170W304 ******	UD70/170 A3 Channel 2 (P1)
19		P1–19		P1–17
20		P3–4		P3–3
21		P2–10		P2–4
SHLD		P1–SHLD		P2–SHLD
SHLD		P3–SHLD		P2–SHLD
		Pigtail Adapter 13W3(F) Connector (P1) from W304 13W3(M) (See Figure 7–1 at end of table for example of W304 pinouts)	70/170W304A ******	UD70/170 A1J4 (P2), HD15 Connector, Sun Video from BDDS
1		P1–A3		P2–3
2		P1–A2		P2–2
3		P1–A1		P2–1
4		P1–5		P2–13
5		P1–4		P2–10
6		P1–9		P2–14
7		P1–A3 SHLD		P2–8
8		P1–A2 SHLD		P2–7
9		P1–A1 SHLD		P2–6
10		P1–10		P2–10
11		P1–4		P2–10
SHLD		P1–SHLD		P2–SHLD

* NWS Systems Only
** FAA Redundant Systems Only
*** DoD and FAA Redundant Systems Only
**** DoD Systems Only
***** FAA Redundant Systems and NWS Redundant Systems Only
****** NWS Systems and DoD Systems Only

Table 7–1. Running Wire List – Continued

Conductor No.	Conductor Aux.	FROM		TO
		13W3(F) Connector (P2) to CP13 13W3(M) Mouse DIN Connector (P3) from UD70/170 A5 Keyboard (See Figure 7–2 at end of table) (CP13 follows)	70/170W311 ******	UD70/170 A3 User Port 1 (P1)
1		P3–4		P1–3
2		P3–2		P1–4
3		P3–5		P1–5
4		P3–6		P1–6
5		P2–8		P1–9
6		P2–3		P1–10
7		P2–A3		P1–11
8		P2–A2		P1–12
9		P2–A1		P1–13
10		P2–5		P1–15
11		P3–1		P1–17
12		P3–3		P1–18
13		P2–4		P1–20
14		P2–9		P1–22
15		P2–A3 SHLD		P1–23
16		P2–A2 SHLD		P1–24
17		P2–A1 SHLD		P1–25
18		P1–16		P1–4
19		P1–19		P1–17
20		P3–8		P3–3
21		P2–10		P2–4
SHLD		P3–SHLD		P2–SHLD
SHLD		P1–SHLD		P2–SHLD

* NWS Systems Only
** FAA Redundant Systems Only
*** DoD and FAA Redundant Systems Only
**** DoD Systems Only
***** FAA Redundant Systems and NWS Redundant Systems Only
****** NWS Systems and DoD Systems Only

Table 7–1. Running Wire List – Continued

Conductor No.	Conductor Aux.	FROM	TO
		CP13 ******	
		Attach to W311 cable Adapter, 13W3(M) to HD15(F) 13W3(M) Connector (P2) (See Figure 7–2 at end of table for example of W311 pinouts)	HD15(F) Connector (P1), attach to UD70/170 A4 Monitor Cable
1		P2–A3	P1–3
2		P2–A2	P1–2
3		P2–A1	P1–1
4		P2–5	P1–13
5		P2–4	P1–5
6		P2–9	P1–5
7		P2–A3 SHLD	P1–8
8		P2–A2 SHLD	P1–7
9		P2–A1 SHLD	P1–6
10		P2–4	P1–10
11		P2–10	P1–10
SHLD		P2–SHLD	P1–SHLD
		70/170W312 *	
		UD70/170 A8 (Top SCSI) (P1)	UD70/170 A9 (Bottom SCSI) (P2)
1		P1–1	P2–1
2		P1–2	P2–2
3		P1–3	P2–3
4		P1–4	P2–4
5		P1–5	P2–5
6		P1–6	P2–6
7		P1–7	P2–7
8		P1–8	P2–8
9		P1–9	P2–9
10		P1–10	P2–10
11		P1–11	P2–11
12		P1–12	P2–12

* NWS Systems Only
** FAA Redundant Systems Only
*** DoD and FAA Redundant Systems Only
**** DoD Systems Only
***** FAA Redundant Systems and NWS Redundant Systems Only
******NWS Systems and DoD Systems Only

Table 7–1. Running Wire List – Continued

Conductor No.	Conductor Aux.	FROM	TO
		70/170W312 *	
		UD70/170 A8 (Top SCSI) (P1)	UD70/170 A9 (Bottom SCSI) (P2)
13		P1–13	P2–13
14		P1–14	P2–14
15		P1–15	P2–15
16		P1–16	P2–16
17		P1–17	P2–17
18		P1–18	P2–18
19		P1–19	P2–19
20		P1–20	P2–20
21		P1–21	P2–21
22		P1–22	P2–22
23		P1–23	P2–23
24		P1–24	P2–24
25		P1–25	P2–25
26		P1–26	P2–26
27		P1–27	P2–27
28		P1–28	P2–28
29		P1–29	P2–29
30		P1–30	P2–30
31		P1–31	P2–31
32		P1–32	P2–32
33		P1–33	P2–33
34		P1–34	P2–34
35		P1–35	P2–35
36		P1–36	P2–36
37		P1–37	P2–37
38		P1–38	P2–38
39		P1–39	P2–39
40		P1–40	P2–40
41		P1–41	P2–41
42		P1–42	P2–42
43		P1–43	P2–43
44		P1–44	P2–44
45		P1–45	P2–45

* NWS Systems Only
** FAA Redundant Systems Only
*** DoD and FAA Redundant Systems Only
**** DoD Systems Only
***** FAA Redundant Systems and NWS Redundant Systems Only
******NWS Systems and DoD Systems Only

Table 7–1. Running Wire List – Continued

Conductor No.	Conductor Aux.	FROM	TO
		70/170W312 *	
		UD70/170 A8 (Top SCSI) (P1)	UD70/170 A9 (Bottom SCSI) (P2)
46		P1–46	P2–46
47		P1–47	P2–47
48		P1–48	P2–48
49		P1–49	P2–49
50		P1–50	P2–50
SHLD		P1–GND	P2–GND
		70/170W315 (8–Port Octopus Cable)	
		UD70/170A7A4J1 (P8)	70/170W315 (P0) (CP16)
		P8–1	P0–2
		P8–2	P0–3
		P8–3	P0–4
		P8–4	P0–5
		P8–5	P0–6
		P8–6	P0–8
		P8–7	P0–20
		P8–8	P0–7 (GND)
		UD70/170A7A4J1 (P8)	70/170W315 (P1) (70/170W315B–P2)
		P8–9	P1–2
		P8–10	P1–3
		P8–11	P1–4
		P8–12	P1–5
		P8–13	P1–6
		P8–14	P1–8
		P8–15	P1–20
		P8–8	P1–7 (GND)

* NWS Systems Only
** FAA Redundant Systems Only
*** DoD and FAA Redundant Systems Only
**** DoD Systems Only
***** FAA Redundant Systems and NWS Redundant Systems Only
******NWS Systems and DoD Systems Only

Table 7–1. Running Wire List – Continued

Conductor No.	Conductor Aux.	FROM	TO
		UD70/170A7A4J1 (P8)	70/170W315 (P2) (70/170W315C–P2)
		P8–30	P2–2
		P8–29	P2–3
		P8–28	P2–4
		P8–27	P2–5
		P8–26	P2–6
		P8–25	P2–8
		P8–24	P2–20
		P8–23	P2–7
		UD70/170A7A4J1 (P8)	70/170W315 (P3) (CP17)
		P8–22	P3–2
		P8–21	P3–3
		P8–20	P3–4
		P8–19	P3–5
		P8–18	P3–6
		P8–17	P3–8
		P8–16	P3–20
		P8–23	P3–7
		UD70/170A7A4J1 (P8)	70/170W315 (P4) (CP18)
		P8–31	P4–2
		P8–32	P4–3
		P8–33	P4–4
		P8–34	P4–5
		P8–35	P4–6
		P8–36	P4–8
		P8–37	P4–20
		P8–38	P4–7 (GND)
		UD70/170A7A4J1 (P8)	70/170W315 (P5) (70/170W315F–P2)
		P8–39	P5–2
		P8–40	P5–3

* NWS Systems Only
** FAA Redundant Systems Only
*** DoD and FAA Redundant Systems Only
**** DoD Systems Only
***** FAA Redundant Systems and NWS Redundant Systems Only
******NWS Systems and DoD Systems Only

Table 7–1. Running Wire List – Continued

Conductor No.	Conductor Aux.	FROM	TO
		UD70/170A7A4J1 (P8)	70/170W315 (P5) (70/170W315F–P2)
		P8–41 P8–42 P8–43 P8–44 P8–45 P8–38	P5–4 P5–5 P5–6 P5–8 P5–20 P5–7 (GND)
		UD70/170A7A4J1 (P8)	70/170W315 (P6) (70/170W315G–P2)
		P8–60 P8–59 P8–58 P8–57 P8–56 P8–55 P8–54 P8–53	P6–2 P6–3 P6–4 P6–5 P6–6 P6–8 P6–20 P6–7 (GND)
		UD70/170A7A4J1 (P8)	70/170W315 (P7) (70/170W315H–P2)
		P8–52 P8–51 P8–50 P8–49 P8–48 P8–47 P8–46 P8–53	P7–2 P7–3 P7–4 P7–5 P7–6 P7–8 P7–20 P7–7 (GND)
		70/170W315B UD70/170A13 CONSOLE PORT (P1)	P2 (70/170W315 P1)
		P1–6 P1–3 P1–8	P2–2 P2–3 P2–4

* NWS Systems Only
** FAA Redundant Systems Only
*** DoD and FAA Redundant Systems Only
**** DoD Systems Only
***** FAA Redundant Systems and NWS Redundant Systems Only
****** NWS Systems and DoD Systems Only

Table 7–1. Running Wire List – Continued

Conductor No.	Conductor Aux.	FROM	TO
		70/170W315B	
		UD70/170A13 CONSOLE PORT (P1)	P2 (70/170W315 P1)
		P1–1	P2–5
		P1–2	P2–6/P2–8
		P1–4/P1–5	P2–7
		P1–7	P2–20
		P1–4/P1–5	N/C
		70/170W315C	
		UD70/170A2 CONSOLE PORT (P1)	P2 (70/170W315 P2)
		P1–6	P2–2
		P1–3	P2–3
		P1–8	P2–4
		P1–1	P2–5
		P1–2	P2–6/P2–8
		P1–4/P1–5	P2–7
		P1–7	P2–20
		P1–4/P1–5	N/C
		70/170W315F	
		UD70/170A15 CONSOLE PORT (P1)	P2 (70/170W315 P5)
		P1–3	P2–2
		P1–2	P2–3
		P1–5	P2–4
		P1–4	P2–5
		P1–8	P2–6/P2–20
		P1–1/P1–7	P2–7
		P1–6	P2–8
		P1–1/P1–7	N/C
		70/170W315G	
		UD70/170A16 CONSOLE PORT (P1)	P2 (70/170W315 P6)
		P1–3	P2–2

* NWS Systems Only
** FAA Redundant Systems Only
*** DoD and FAA Redundant Systems Only
**** DoD Systems Only
***** FAA Redundant Systems and NWS Redundant Systems Only
******NWS Systems and DoD Systems Only

Table 7–1. Running Wire List – Continued

Conductor No.	Conductor Aux.	FROM		TO
			70/170W315G	
		UD70/170A16 CONSOLE PORT (P1)		P2 (70/170W315 P6)
		P1–2		P2–3
		P1–5		P2–4
		P1–4		P2–5
		P1–8		P2–6/P2–20
		P1–1/P1–7		P2–7
		P1–6		P2–8
		P1–1/P1–7		N/C
			70/170W315H	
		UD70/170A17 CONSOLE PORT (P1)		P2 (70/170W315 P7)
		P1–3		P2–2
		P1–2		P2–3
		P1–5		P2–4
		P1–4		P2–5
		P1–8		P2–6/P2–20
		P1–1/P1–7		P2–7
		P1–6		P2–8
		P1–1/P1–7		N/C
			70/170W900 **	
		UD70/170 J16 (P1)		UD70/170 A37 (P2)
		PLUG (P1)	71W187 through 71W190	POWER CORDS SOCKET (P2)
1		P1–Hot		P2–Hot
2		P1–Neutral		P2–Neutral
3		P1–Ground		P2–Ground
			71W211	
		UD71 A1A4 (PCI Slot 3) (P1)		UD71 A6 (Bottom SCSI) (P2)
1		P1–6		P2–1

* NWS Systems Only
** FAA Redundant Systems Only
*** DoD and FAA Redundant Systems Only
**** DoD Systems Only
***** FAA Redundant Systems and NWS Redundant Systems Only
******NWS Systems and DoD Systems Only

Table 7–1. Running Wire List – Continued

Conductor No.	Conductor Aux.	FROM	TO
		71W211	
		UD71 A1A4 (PCI Slot 3) (P1)	UD71 A6 (Bottom SCSI) (P2)
2		P1–7	P2–2
3		P1–8	P2–3
4		P1–9	P2–4
5		P1–10	P2–5
6		P1–11	P2–6
7		P1–12	P2–7
8		P1–13	P2–8
9		P1–14	P2–9
10		P1–15	P2–10
11		P1–16	P2–11
12		P1–17	P2–12
13		P1–18	P2–13
14		P1–19	P2–14
15		P1–20	P2–15
16		P1–21	P2–16
17		P1–22	P2–17
18		P1–23	P2–18
19		P1–24	P2–19
20		P1–25	P2–20
21		P1–26	P2–21
22		P1–27	P2–22
23		P1–28	P2–23
24		P1–29	P2–24
25		P1–30	P2–25
26		P1–40	P2–26
27		P1–41	P2–27
28		P1–42	P2–28
29		P1–43	P2–29
30		P1–44	P2–30
31		P1–45	P2–31
32		P1–46	P2–32
33		P1–47	P2–33
34		P1–48	P2–34

* NWS Systems Only
** FAA Redundant Systems Only
*** DoD and FAA Redundant Systems Only
**** DoD Systems Only
***** FAA Redundant Systems and NWS Redundant Systems Only
******NWS Systems and DoD Systems Only

Table 7–1. Running Wire List – Continued

Conductor No.	Conductor Aux.	FROM	TO
		71W211	
		UD71 A1A4 (PCI Slot 3) (P1)	UD71 A6 (Bottom SCSI) (P2)
35		P1–49	P2–35
36		P1–50	P2–36
37		P1–51	P2–37
38		P1–52	P2–38
39		P1–53	P2–39
40		P1–54	P2–40
41		P1–55	P2–41
42		P1–56	P2–42
43		P1–57	P2–43
44		P1–58	P2–44
45		P1–59	P2–45
46		P1–60	P2–46
47		P1–61	P2–47
48		P1–62	P2–48
49		P1–63	P2–49
50		P1–64	P2–50
SHLD		P1–GND	P2–GND
		71W214	
		Pigtail Adapter 13W3(F) Connector (P1) from UD71A2 monitor cable 13W3(M) (See Figure 7–1 at end of table for example of W303 pinouts to determine 13W3–type numbering)	UD71A1J4 (P2), HD15 Connector, Sun Video from MSCF Processor
1		P1–A3	P2–3
2		P1–A2	P2–2
3		P1–A1	P2–1
4		P1–5	P2–13
5		P1–4	P2–10
6		P1–9	P2–14

* NWS Systems Only
** FAA Redundant Systems Only
*** DoD and FAA Redundant Systems Only
**** DoD Systems Only
***** FAA Redundant Systems and NWS Redundant Systems Only
******NWS Systems and DoD Systems Only

Table 7–1. Running Wire List – Continued

Conductor No.	Conductor Aux.	FROM	TO
		71W214	
		Pigtail Adapter 13W3(F) Connector (P1) from UD71A2 monitor cable 13W3(M) (See Figure 7–1 at end of table for example of W303 pinouts to determine 13W3–type numbering)	UD71A1J4 (P2), HD15 Connector, Sun Video from MSCF Processor
7		P1–A3 SHLD	P2–8
8		P1–A2 SHLD	P2–7
9		P1–A1 SHLD	P2–6
10		P1–10	P2–10
11		P1–4	P2–10
SHLD		P1–SHLD	P2–SHLD
		71W221 ***	SERIAL Port A
		UD71 A5 DTE A (P1)	UD71 A1A1J3 (P2)
1	1	P1–1	P2–1
1	2	P1–2	P2–2
2	1	P1–3	P2–3
2	2	P1–7	P2–7
3	1	P1–4	P2–4
3	2	P1–20	P2–20
4	1	P1–5	P2–5
4	2	P1–6	P2–6
5	1	P1–8	P2–8
5	2	P1–11	P2–11
6	1	P1–15	P2–15
6	2	P1–17	P2–17
7	1	P1–24	P2–24
7	2	P1–14	P2–14
8	1	P1–18	P2–18
8	2	P1–25	P2–25
	SHLD	P1–GND	P2–GND

* NWS Systems Only
** FAA Redundant Systems Only
*** DoD and FAA Redundant Systems Only
**** DoD Systems Only
***** FAA Redundant Systems and NWS Redundant Systems Only
******NWS Systems and DoD Systems Only

Table 7–1. Running Wire List – Continued

Conductor No.	Conductor Aux.	FROM	TO
		71W902 ******	
		UD71 CP1 Duplex Jack (P1)	UD71 A1A2 (P2)
1		P1–1	P2–1
2		P1–2	P2–2
3		P1–3	P2–3
4		P1–4	P2–4
OR			
1		P1–1	P2–4
2		P1–2	P2–3
3		P1–3	P2–2
4		P1–4	P2–1
		71W902A **	
		UD71 E1 (OUT) (P1)	UD71 A1A2 (P2)
1		P1–1	P2–1
2		P1–2	P2–2
3		P1–3	P2–3
4		P1–4	P2–4
OR			
1		P1–1	P2–4
2		P1–2	P2–3
3		P1–3	P2–2
4		P1–4	P2–1

* NWS Systems Only
** FAA Redundant Systems Only
*** DoD and FAA Redundant Systems Only
**** DoD Systems Only
***** FAA Redundant Systems and NWS Redundant Systems Only
****** NWS Systems and DoD Systems Only

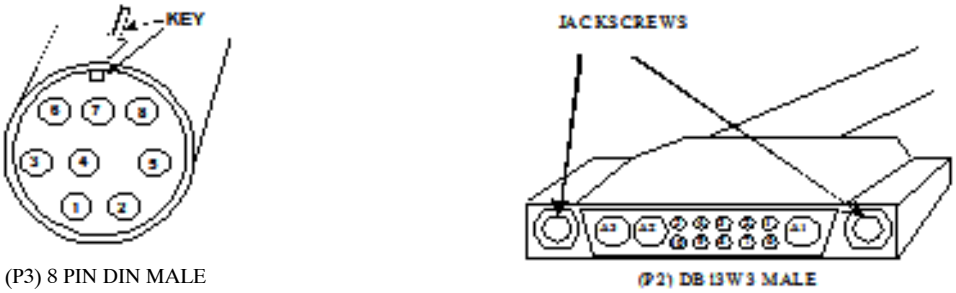

Figure 7–1. Cables 70/170W303/304 Male Non–Standard Connectors

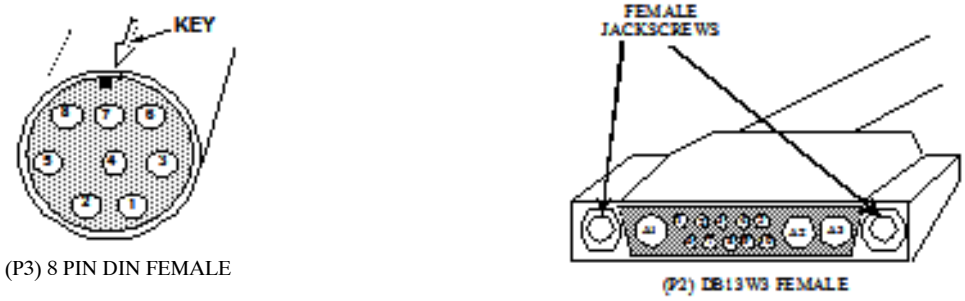

Figure 7–2. Cable 70/170W311 Female Non–Standard Connectors

Section 7.3. UD70/170 Communication ICD Tables

NOTE

This chapter and its corresponding sections refer to the RPGPCA as UD70 (previously referred to as the Processor Cabinet {UD21} and Communications Cabinet {UD22}). Unless otherwise specified for FAA redundant systems, this information also applies to RPGPCA UD170.

7.3.1 COMMUNICATION SERVER (OR ROUTER SERIAL CARD)/MODEM RACK/ADAPTER PANEL INTERCONNECTIVITY.

The following two tables provide the interconnectivity references for the cables that are used within the UD70/170 RPGPCA narrowband area as referenced on Figure FO7–4 through Figure FO7–5 (but not specifically shown on those foldouts). Table 7–2 provides the interconnectivity from the A15, A16, and A17 Communication Server(s) to the UD70/170A14 modem rack and the UD70A20 232/422 converter. Table 7–3 provides interconnectivity between the UD70/170A2A1A2 router serial card and the UD70/170A14 modem rack. Table 7–4 provides the TELCO interconnectivity from the modem racks to the UD70/170A24 Dial Adapter Panel or the UD70/170A25 Dedicated Adapter Panel.

Table 7–2. Communication Server to Modem Rack Interconnections

Communication Servers Reference Designators UD70/170	Port Numbers	Product Distribution Line Numbers on RPG HCI	Cable Number	Modem Rack Connections (UD70/170A14A1 through A16) and UD70A20 232/422 Converter Connection
A15	Port 0	Line 1	70/170W266	UD70/170A14A1DTEA
A15	Port 1	Line 2	70/170W267	UD70/170A14A1DTEB
A15	Port 2	Line 3	70/170W268	UD70/170A14A2DTEA
A15	Port 3	Line 4	70/170W269	UD70/170A14A2DTEB
A15	Port 4	Line 5	70/170W270	UD70/170A14A3DTEA
A16	Port 0	Line 9	70/170W274	UD70/170A14A5DTEA**
A16	Port 0	Line 9	70/170W275	UD70A20J2*
A16	Port 1	Line 10	70/170W276	UD70/170A14A6DTEA
A16	Port 2	Line 11	70/170W277	UD70/170A14A7DTEA
A16	Port 3	Line 12	70/170W278	UD70/170A14A8DTEA
A16	Port 4	Line 13	70/170W279	UD70/170A14A9DTEA

* NWS Systems Only
** DoD and FAA Redundant Systems Only

Table 7–2. Communication Server to Modem Rack Interconnections – Continued

Communication Servers Reference Designators UD70/170	Port Numbers	Product Distribution Line Numbers on RPG HCI	Cable Number	Modem Rack Connections (UD70/170A14A1 through A16) and UD70A20 232/422 Converter Connection
A16	Port 5	Line 14	70/170W280	UD70/170A14A10DTEA
A16	Port 6	Line 15	70/170W281	UD70/170A14A11DTEA
A16	Port 7	Line 16	70/170W282	UD70/170A14A12DTEA
A17	Port 0	Line 17	70/170W283	UD70/170A14A13DTEA
A17	Port 1	Line 18	70/170W284	UD70/170A14A14DTEA
A17	Port 2	Line 19	70/170W285	UD70/170A14A15DTEA
A17	Port 3	Line 20	70/170W286	UD70/170A14A16DTEA

* NWS Systems Only
** DoD and FAA Redundant Systems Only

Table 7–3. Router Serial Card to Modem Rack Interconnections

Router Serial Card Reference Designators UD70/170	Port Numbers	Product Distribution Line Numbers on RPG HCI	Cable Number	Modem Rack Connections UD70/170A14A3 through A21
A2A2	Port 0	Line 37*	70/170W265	UD70/170A14A21DTEA
A2A2	Port 0	N/A (Distant MSCF)**	70/170W265	UD70/170A14A21DTEA
A2A2	Port 1	Line 33	70/170W291	UD70/170A14A17DTEA
A2A2	Port 2	Line 34	70/170W292	UD70/170A14A18DTEA
A2A2	Port 3	Line 35	70/170W293	UD70/170A14A19DTEA
A2A2	Port 4	Line 36	70/170W294	UD70/170A14A20DTEA
A2A2	Port 5	Line 38	70/170W295	UD70/170A14A3DTEB
A2A2	Port 6	Line 39	70/170W296	UD70/170A14A4DTEA
A2A2	Port 7	Line 40	70/170W297	UD70/170A14A4DTEB

* NWS Systems Only
** DoD and FAA Redundant Systems Only

Table 7–4. Modem Rack to Adapter Panel Interconnections

Product Dist. Line Numbers on RPGHCI	Modem Rack Connections UD70/170A14A1 through A4	Cable Number	Dial Adapter Panel Connections, UD70/ 170A24J1 through J8
Line 1	A1 LINE A1	70/170W101	J1
Line 2	A1 LINE B1	70/170W102	J2
Line 3	A2 LINE A2	70/170W103	J3
Line 4	A2 LINE B2	70/170W104	J4
Line 5	A3 LINE A3	70/170W105	J5
Line 38	A3 LINE B3	70/170W106	J6
Line 39	A4 LINE A4	70/170W107	J7
Line 40	A4 LINE B4	70/170W108	J8
Product Dist. Line Numbers on RPGHCI	**Modem Rack Connections UD70/170A14A5 through A21***	**Cable Number**	**Dedicated Adapter Panel Connections, UD70/170A25J1 through J17**
Line 9***	A5 LINE B5	70/170W109	J1
Line 10	A6 LINE B6	70/170W110	J2
Line 11	A7 LINE B7	70/170W111	J3
Line 12	A8 LINE B8	70/170W112	J4
Line 13	A9 LINE B9	70/170W113	J5
Line 14	A10 LINE B10	70/170W114	J6
Line 15	A11 LINE B11	70/170W115	J7
Line 16	A12 LINE B12	70/170W116	J8
Line 17	A13 LINE B13	70/170W117	J9
Line 18	A14 LINE B14	70/170W118	J10
Line 19	A15 LINE B15	70/170W129	J11
Line 20	A16 LINE B16	70/170W120	J12
Line 33	A17 LINE B17	70/170W121	J13
Line 34	A18 LINE B18	70/170W122	J14

* Not all modem rack slots may actually have modems in place.
** NWS Systems only.
*** Site Specific DoD and FAA Redundant Systems only.

Table 7–4. Modem Rack to Adapter Panel Interconnections – Continued

Product Dist. Line Numbers on RPGHCI	Modem Rack Connections UD70/170A14A5 through A21*	Cable Number	Dedicated Adapter Panel Connections, UD70/170A25J1 through J17
Line 35	A19 LINE B19	70/170W123	J15
Line 36	A20 LINE B20	70/170W124	J16
Line 37**	A21 LINE B21	70/170W125	J17
Distant MSCF***	A21 LINE B21	70/170W125	J17

* Not all modem rack slots may actually have modems in place.
** NWS Systems only.
*** Site Specific DoD and FAA Redundant Systems only.

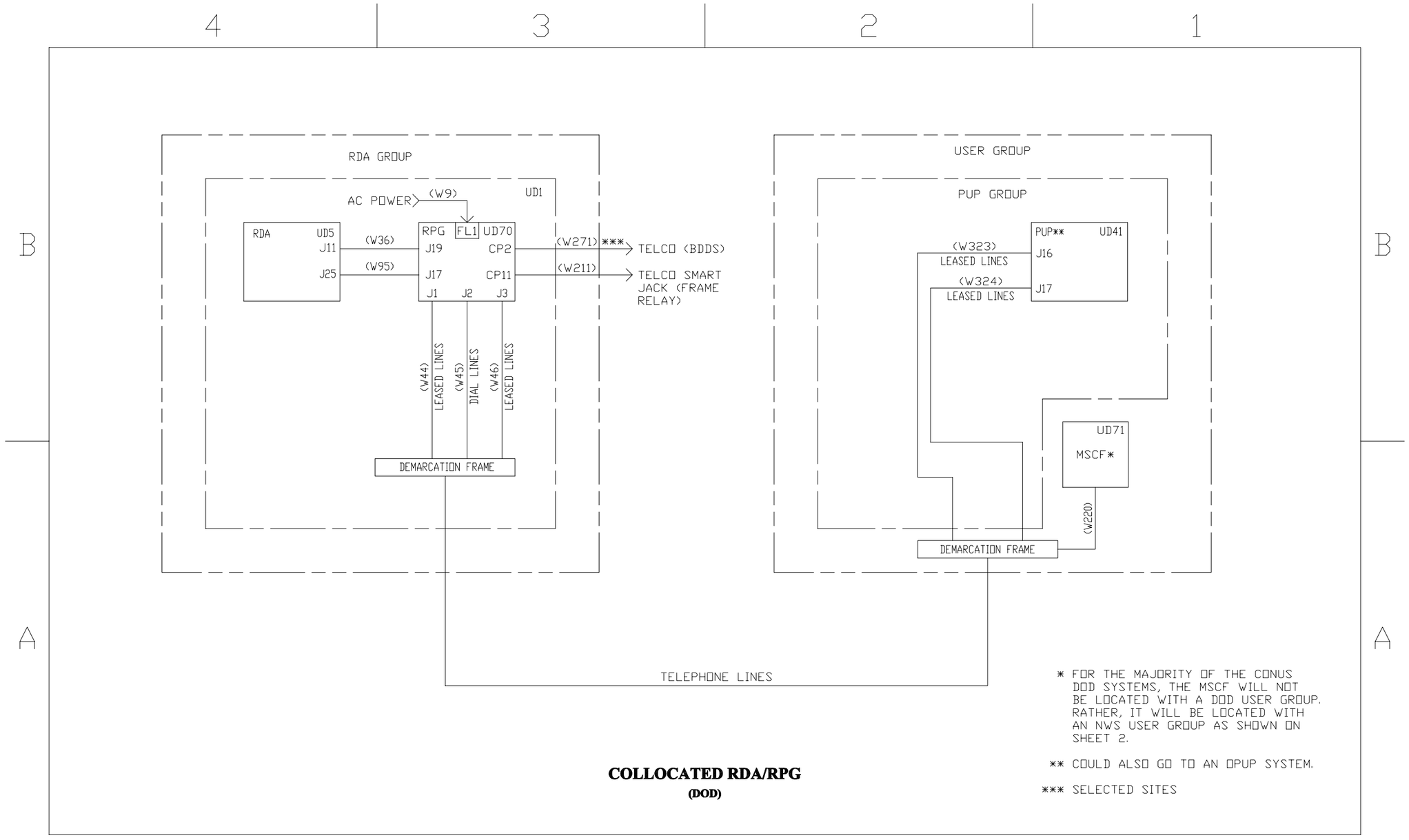

NX1654

Figure FO7–1. WSR–88D System Communications, Interface Diagram (Sheet 1 of 7)

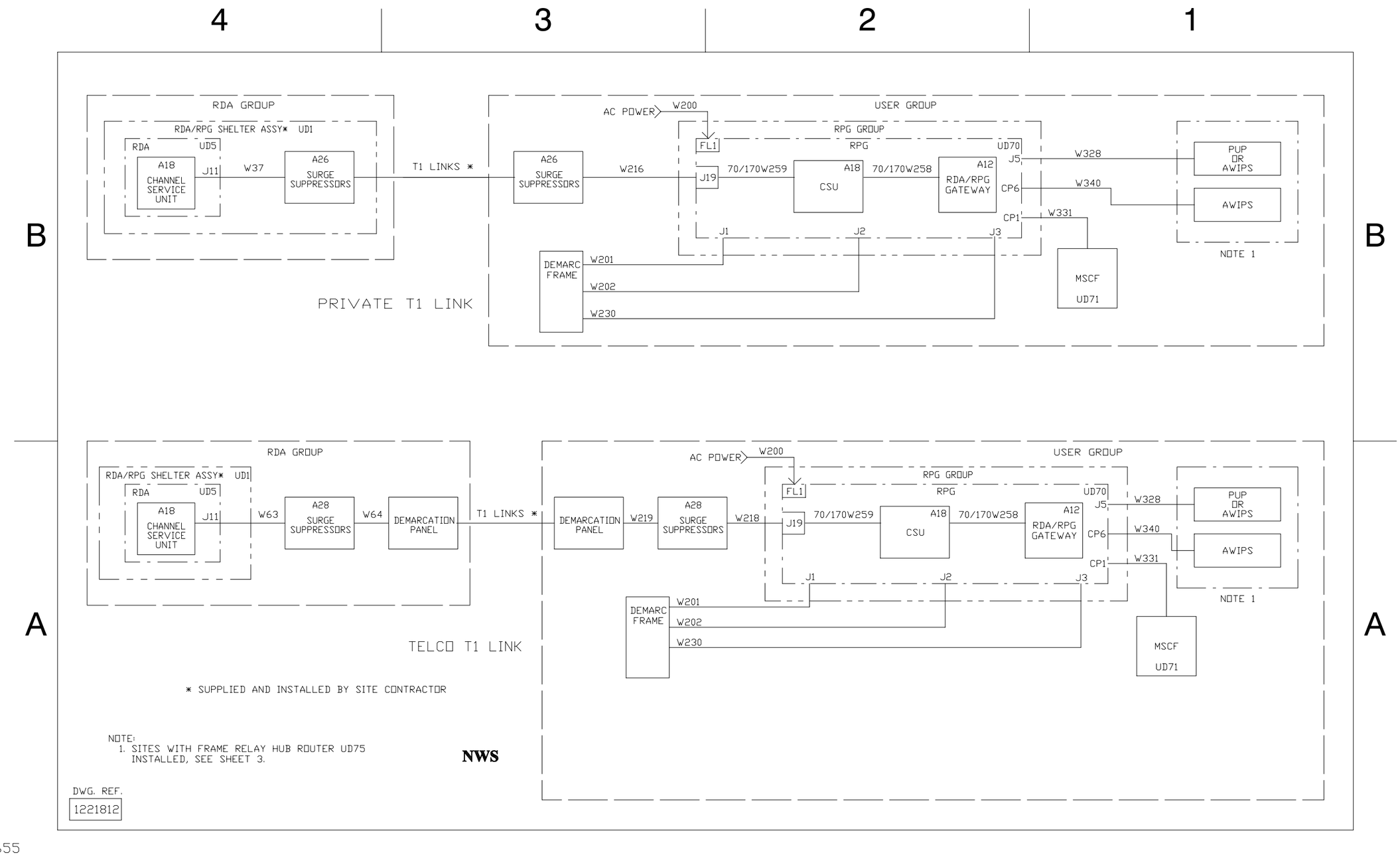

Figure FO7–1. WSR–88D System Communications, Interface Diagram (without Frame Relay) (Sheet 2 of 7)

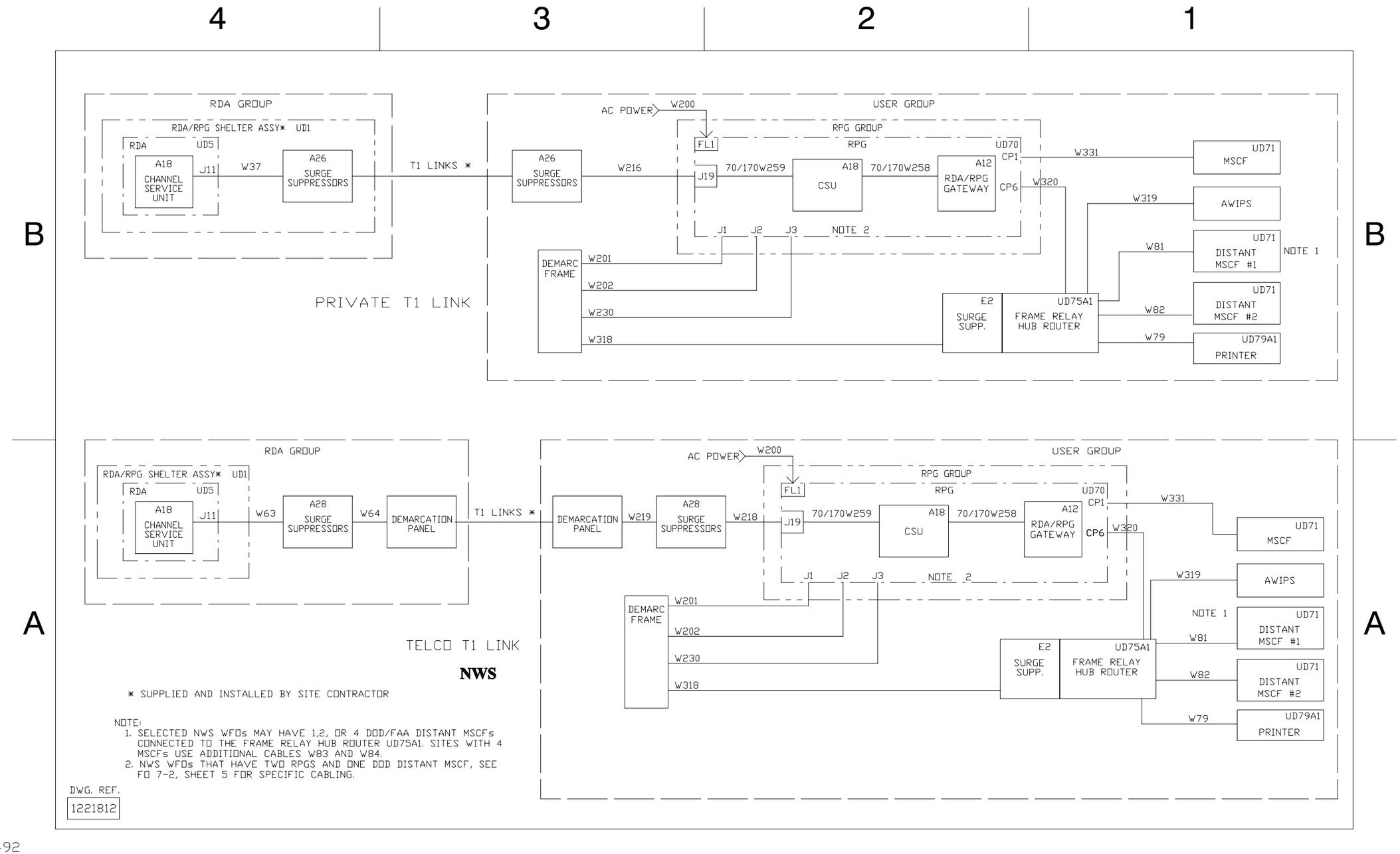

Figure FO7–1. WSR–88D System Communications, Interface Diagram (with Frame Relay) (Sheet 3 of 7)

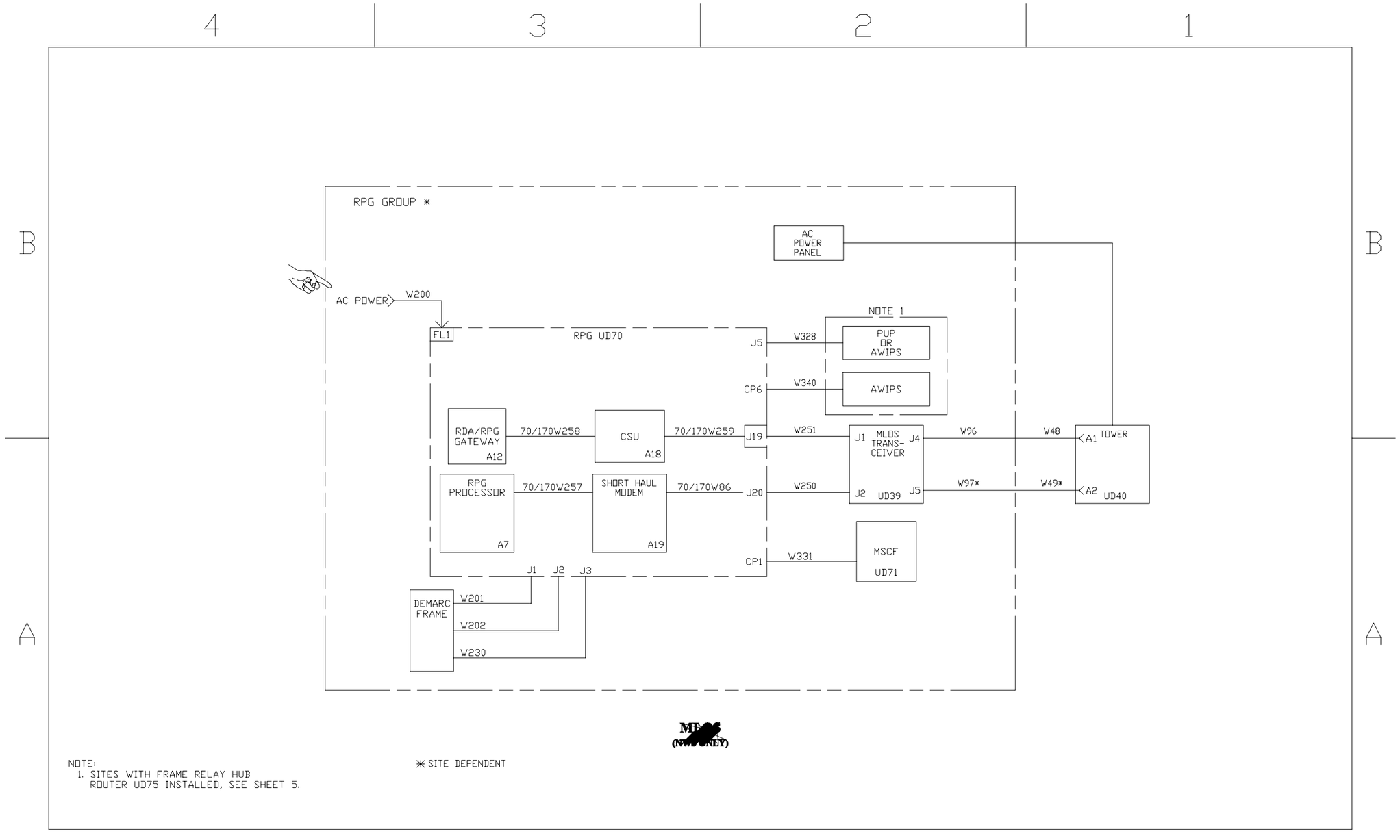

Figure FO7–1. WSR–88D System Communications, Interface Diagram (without Frame Relay) (Sheet 4 of 7)

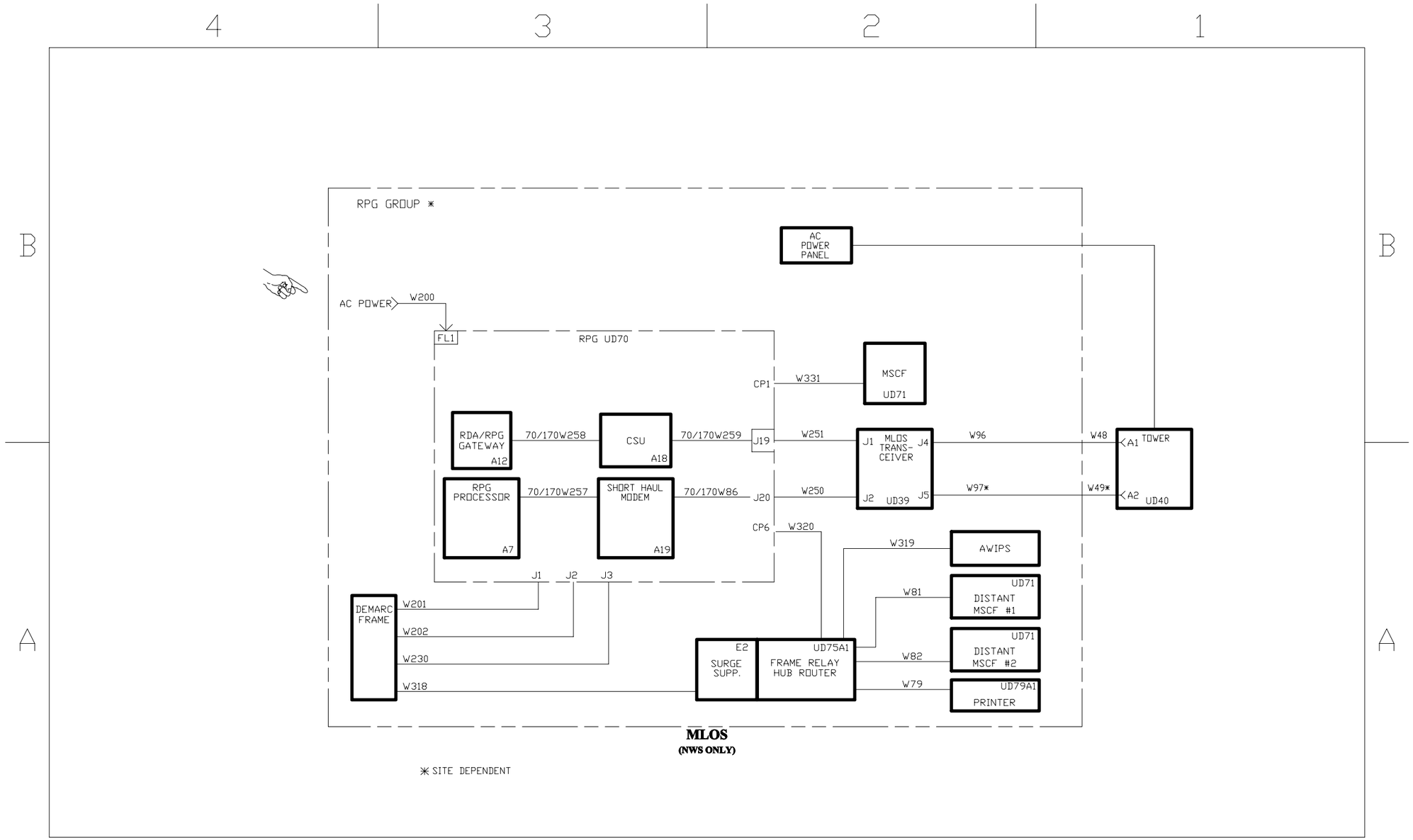

NX2493

Figure FO7–1. WSR–88D System Communications, Interface Diagram (with Frame Relay) (Sheet 5 of 7)

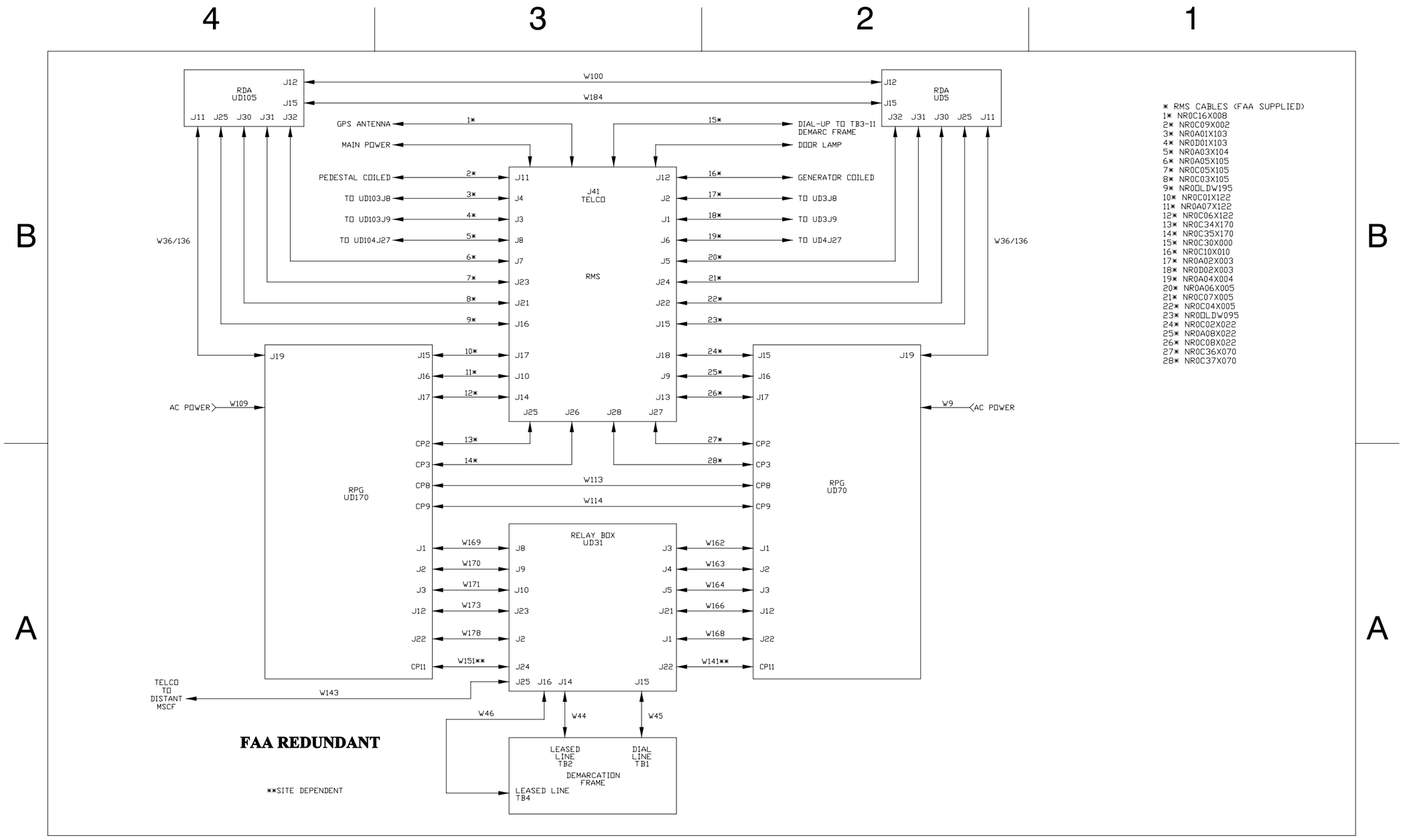

Figure FO7–1. WSR–88D System Communications, Interface Diagram (Sheet 6 of 7)

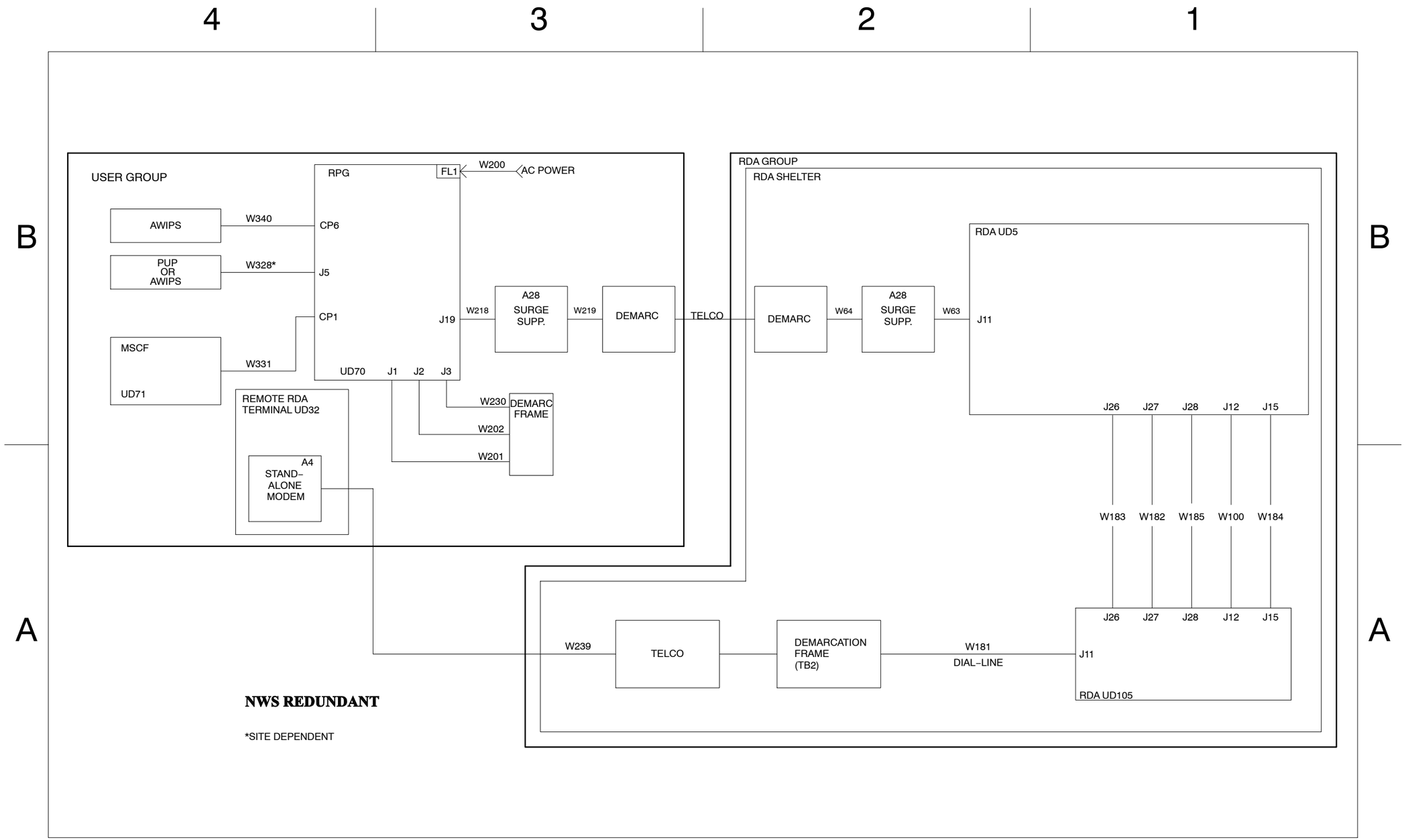

NX1658

Figure FO7–1. WSR–88D System Communications, Interface Diagram (Sheet 7 of 7)

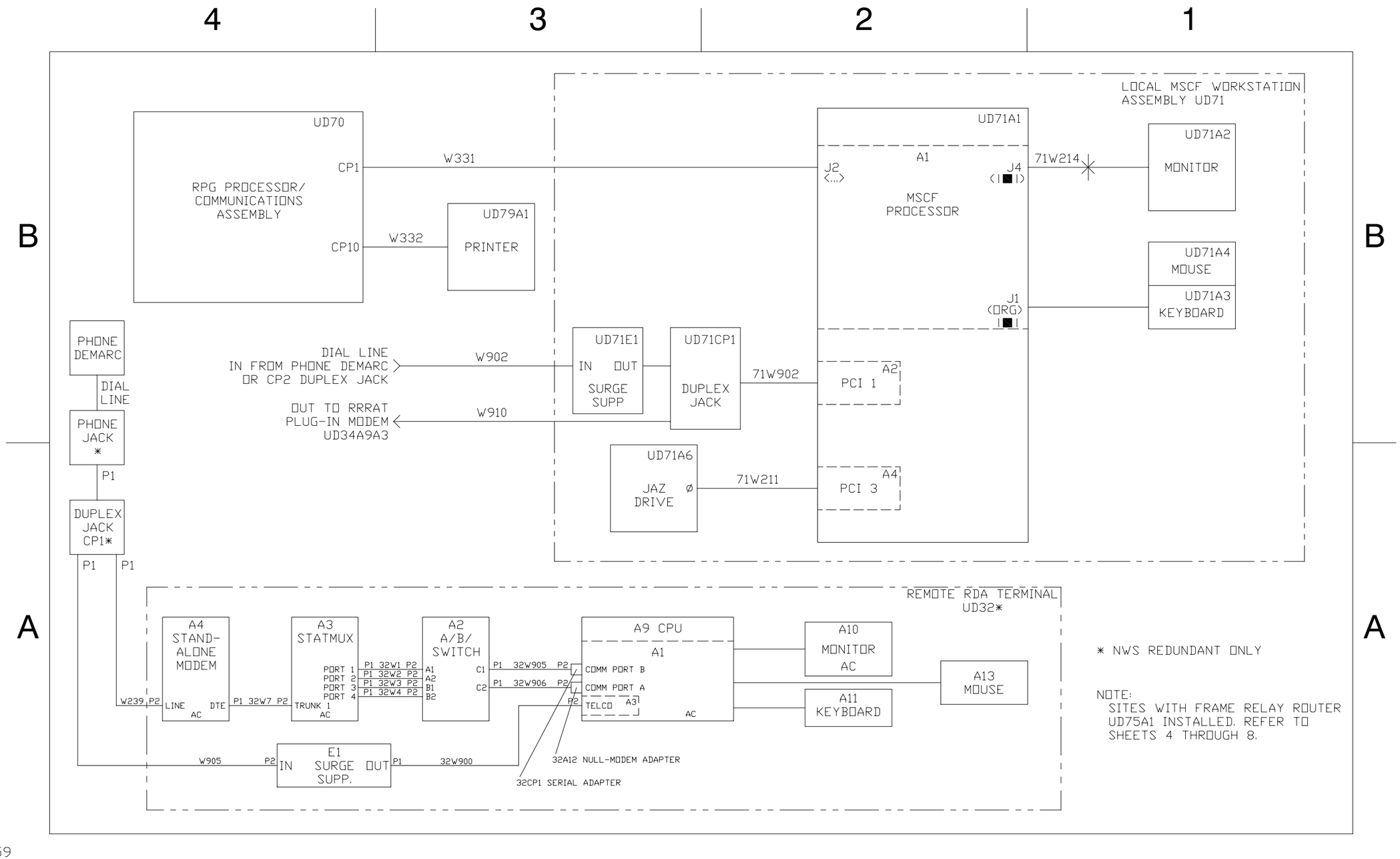

Figure FO7–2. WSR–88D MSCF System Interconnectivity, (NWS with Remote RDA Terminal) (Sheet 1 of 8)

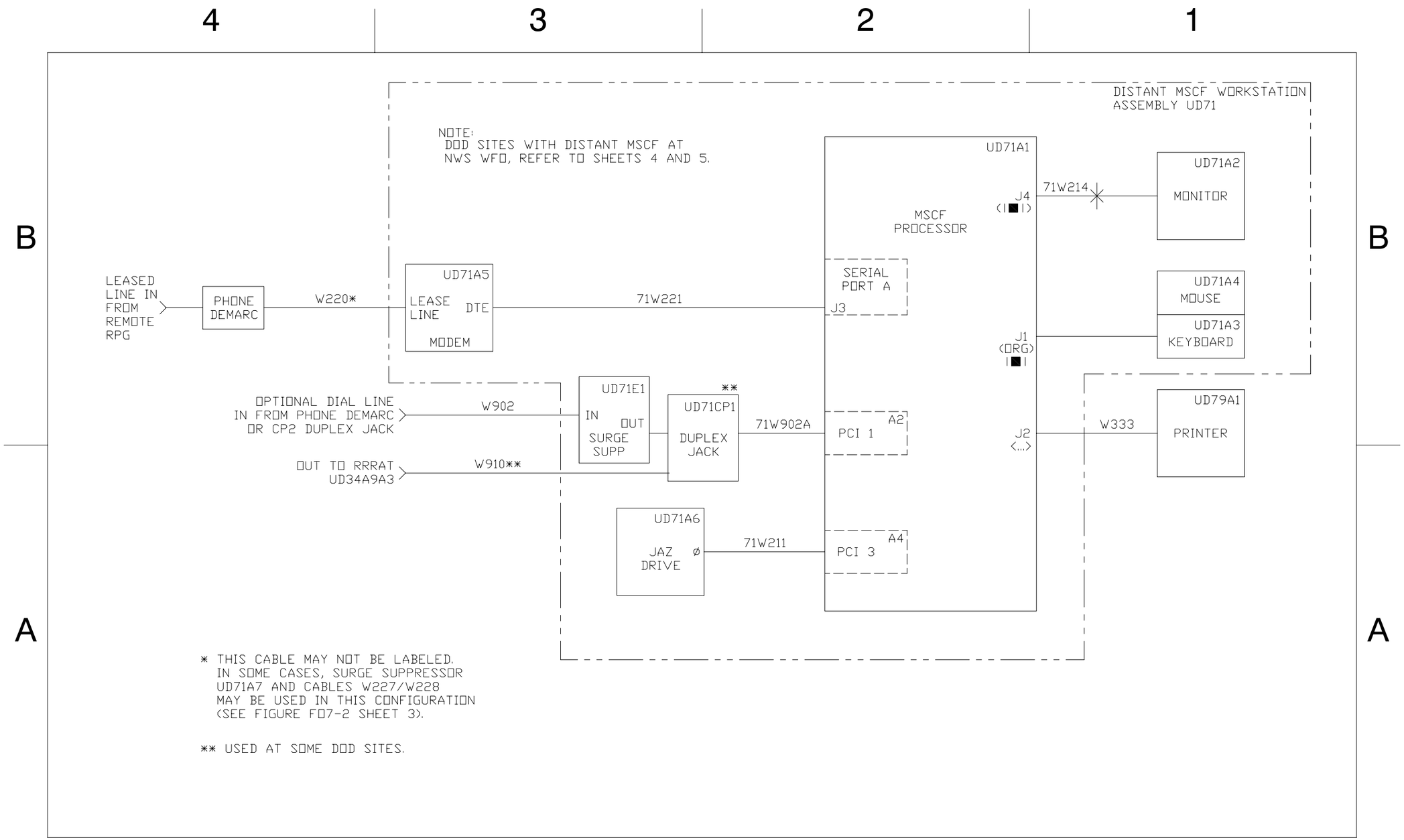

Figure FO7–2. MSCF System Interconnectivity,
(DOD without Frame Relay Service) (Sheet 2 of 8)

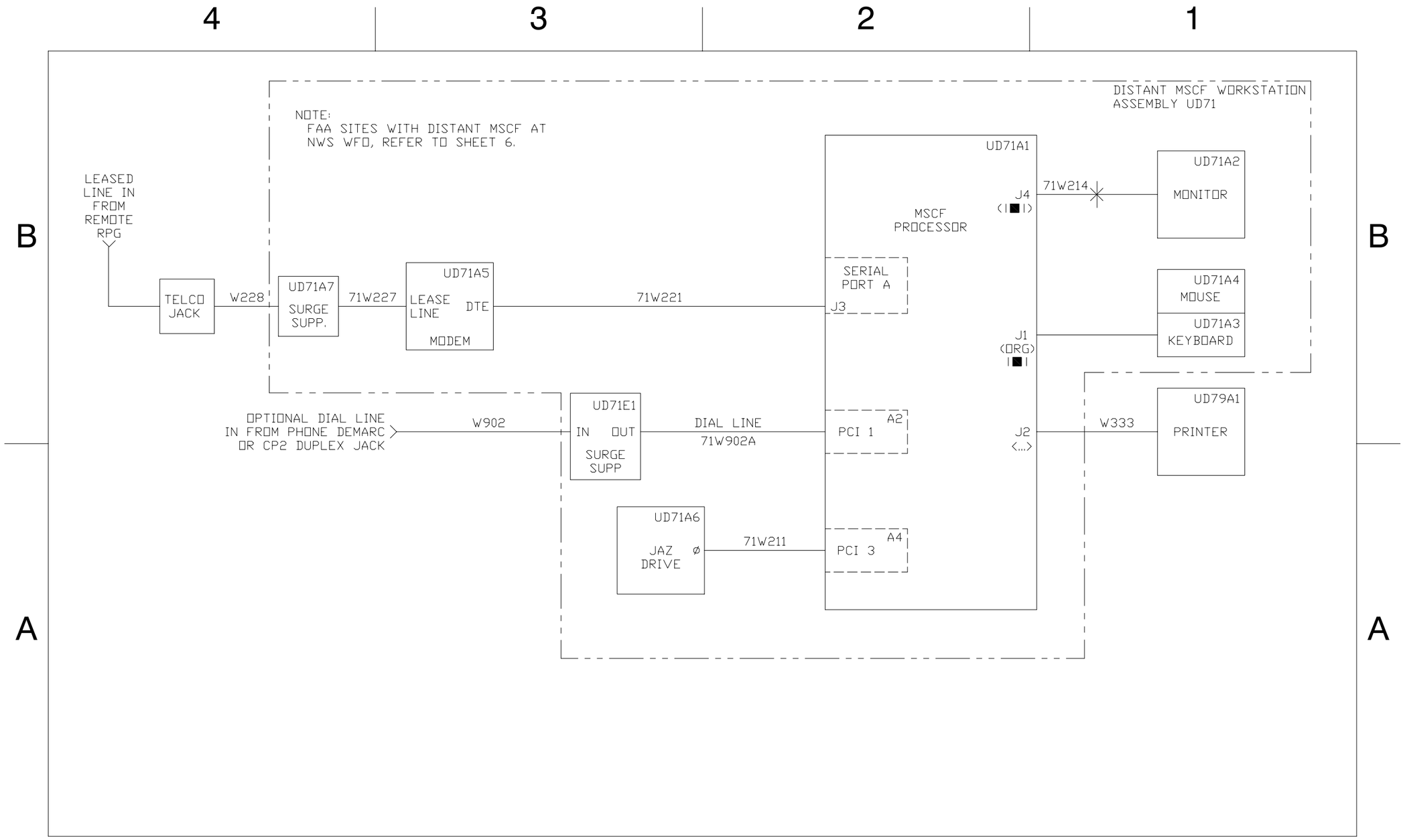

NX1661

Figure FO7–2. WSR–88D MSCF System Interconnectivity,
(FAA without Frame Relay Service) (Sheet 3 of 8)

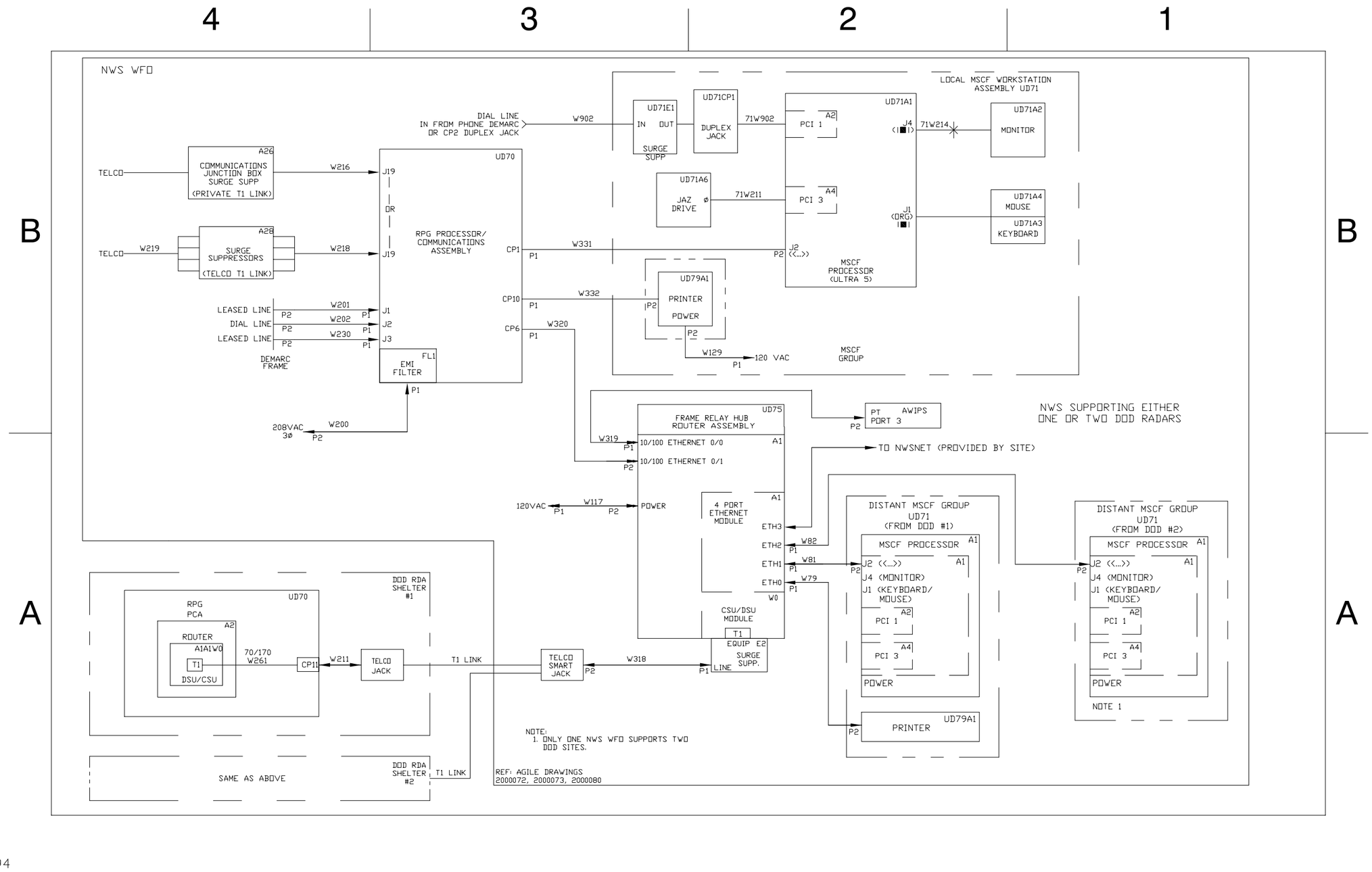

Figure FO7–2. WSR–88D MSCF System Interconnectivity,
(NWS with Frame Relay Router Supporting Either 1 or 2 DoD Radars) (Sheet 4 of 8)

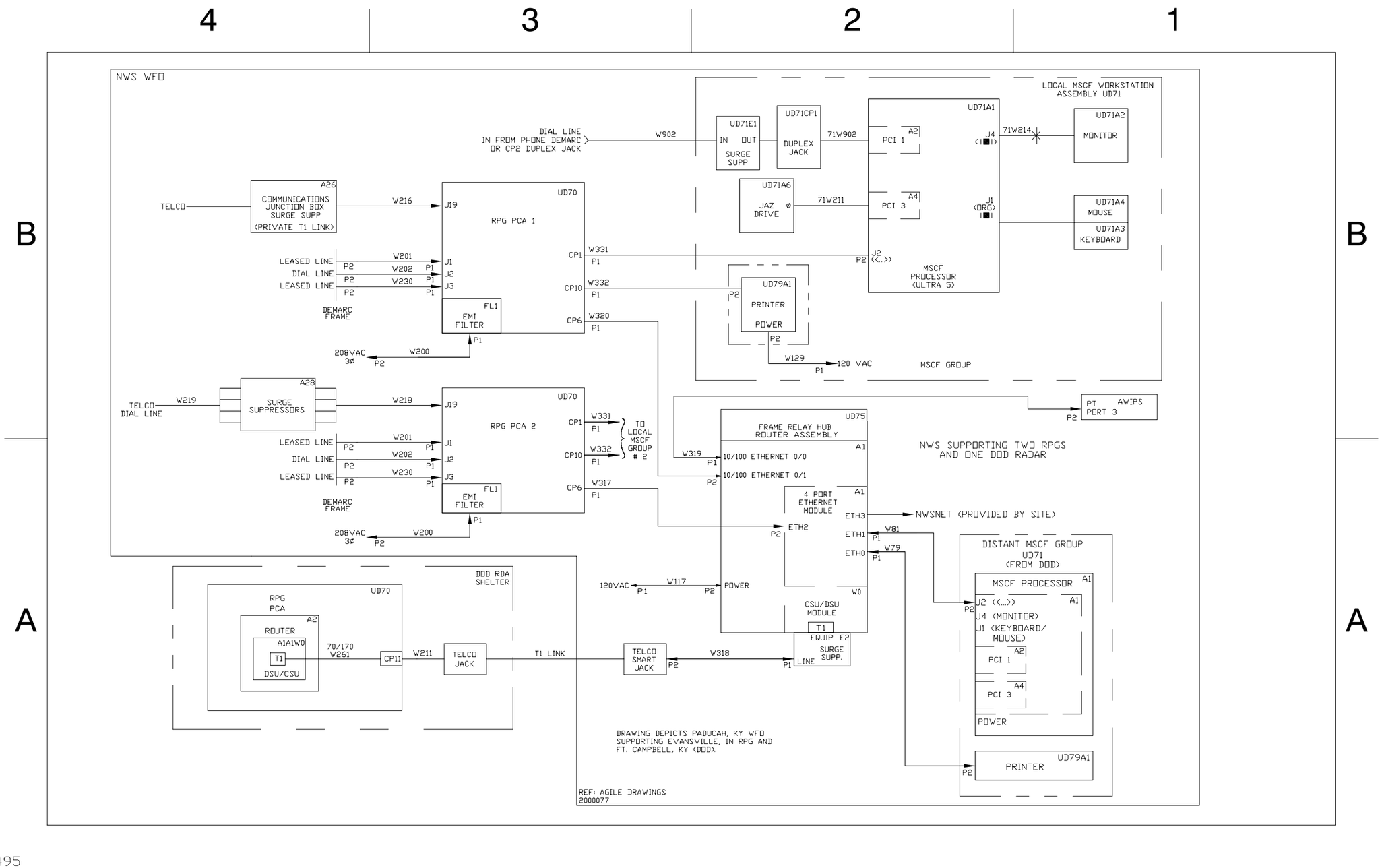

Figure FO7–2. WSR–88D MSCF System Interconnectivity,
(NWS with Frame Relay Router Supporting 2 RPGs and 1 DoD Radar) (Sheet 5 of 8)

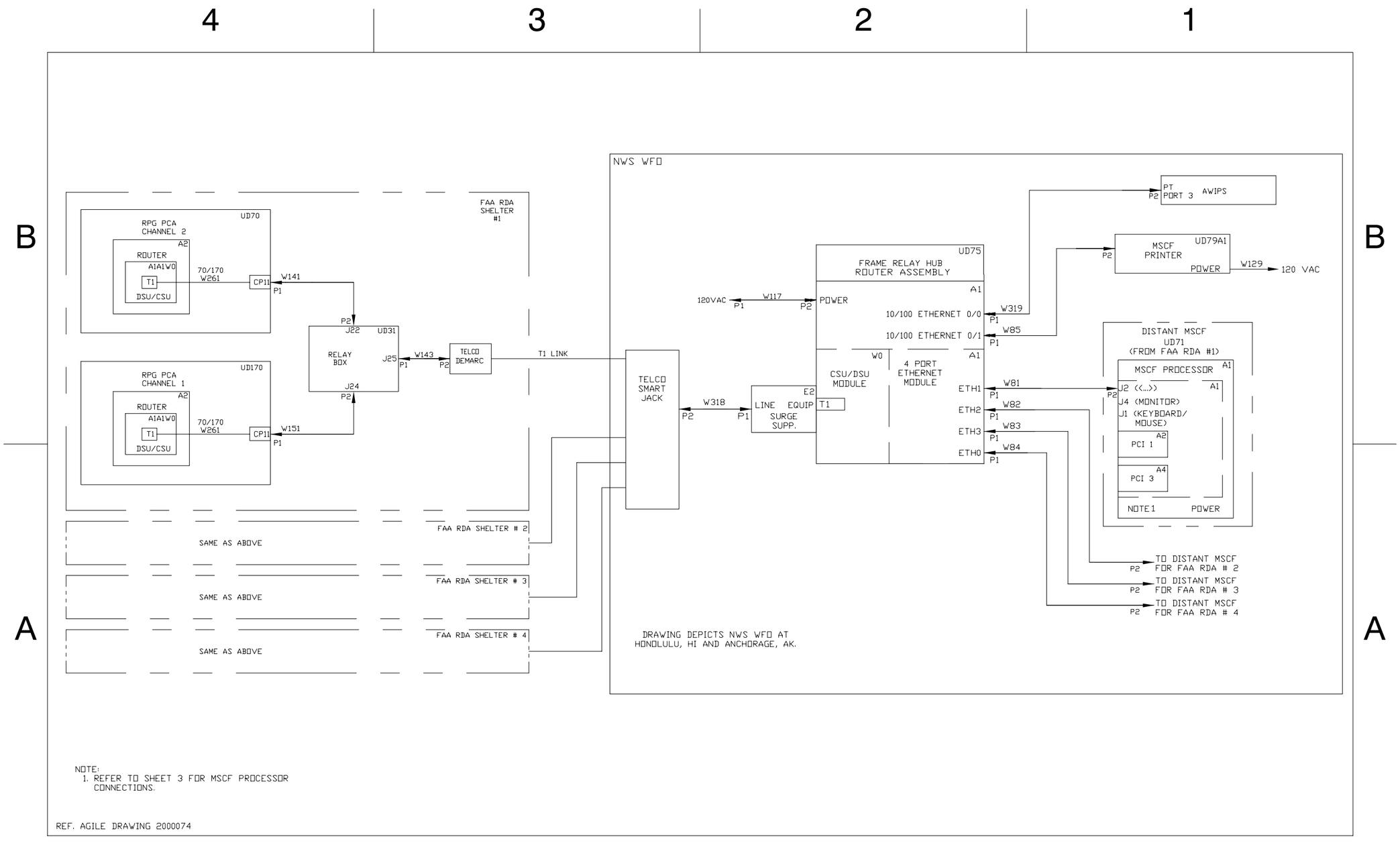

Figure FO7–2. WSR–88D MSCF System Interconnectivity,
(NWS with Frame Relay Router Supporting 4 FAA Radars) (Sheet 6 of 8)

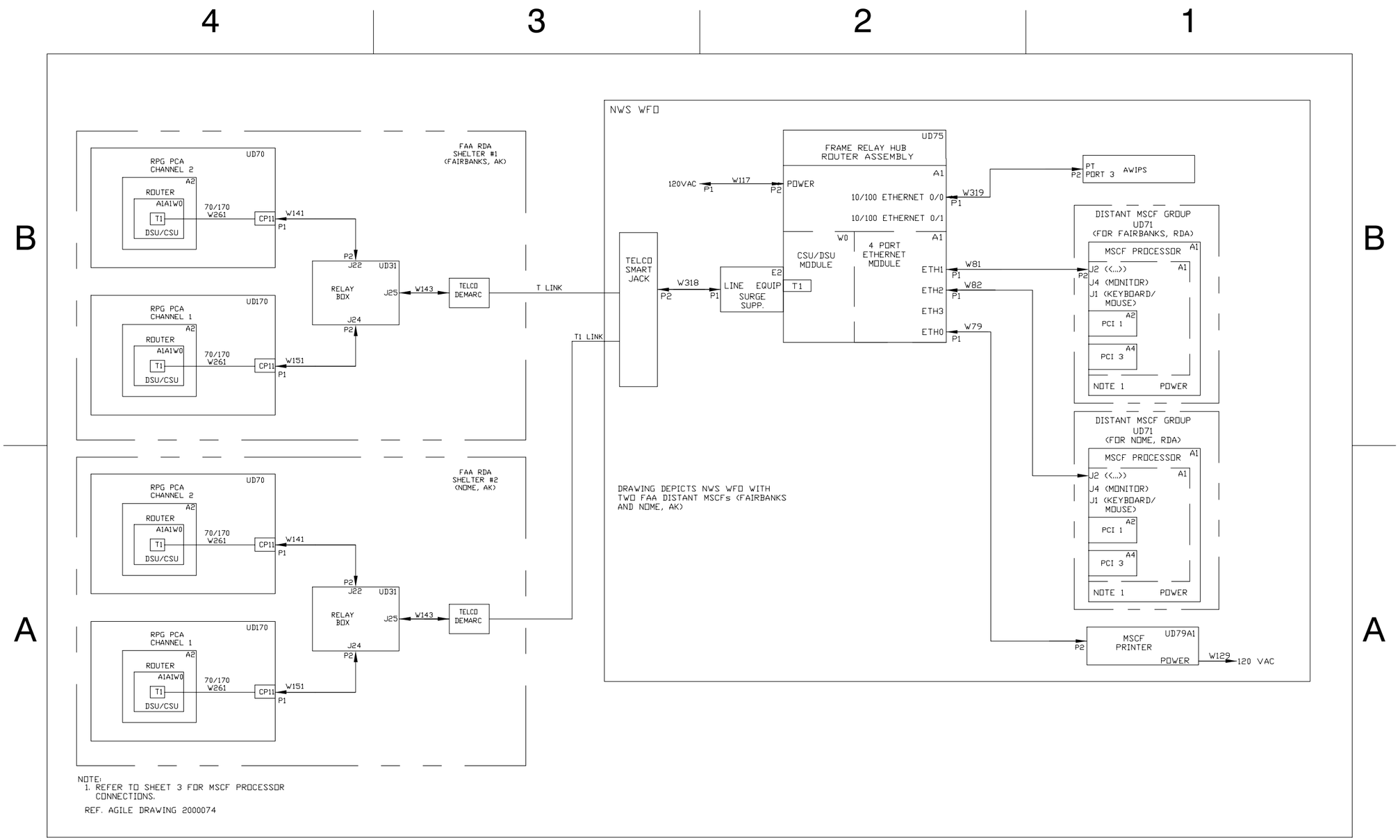

Figure FO7–2. WSR–88D MSCF System Interconnectivity, (NWS with Frame Relay Router Supporting 2 FAA Radars) (Sheet 7 of 8)

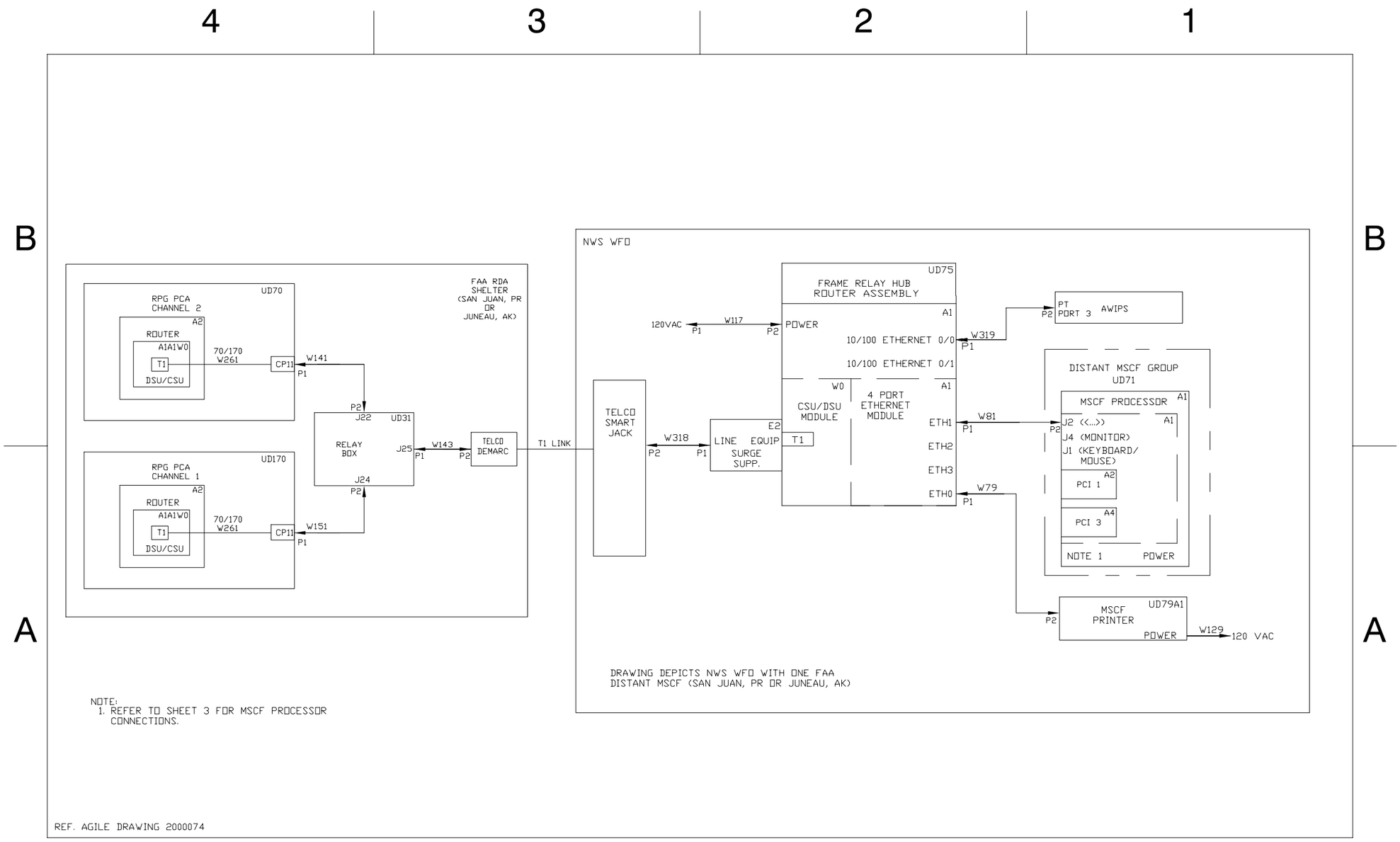

NX2498

Figure FO7–2. WSR–88D MSCF System Interconnectivity, (NWS with Frame Relay Router Supporting 1 FAA Radar) (Sheet 8 of 8)

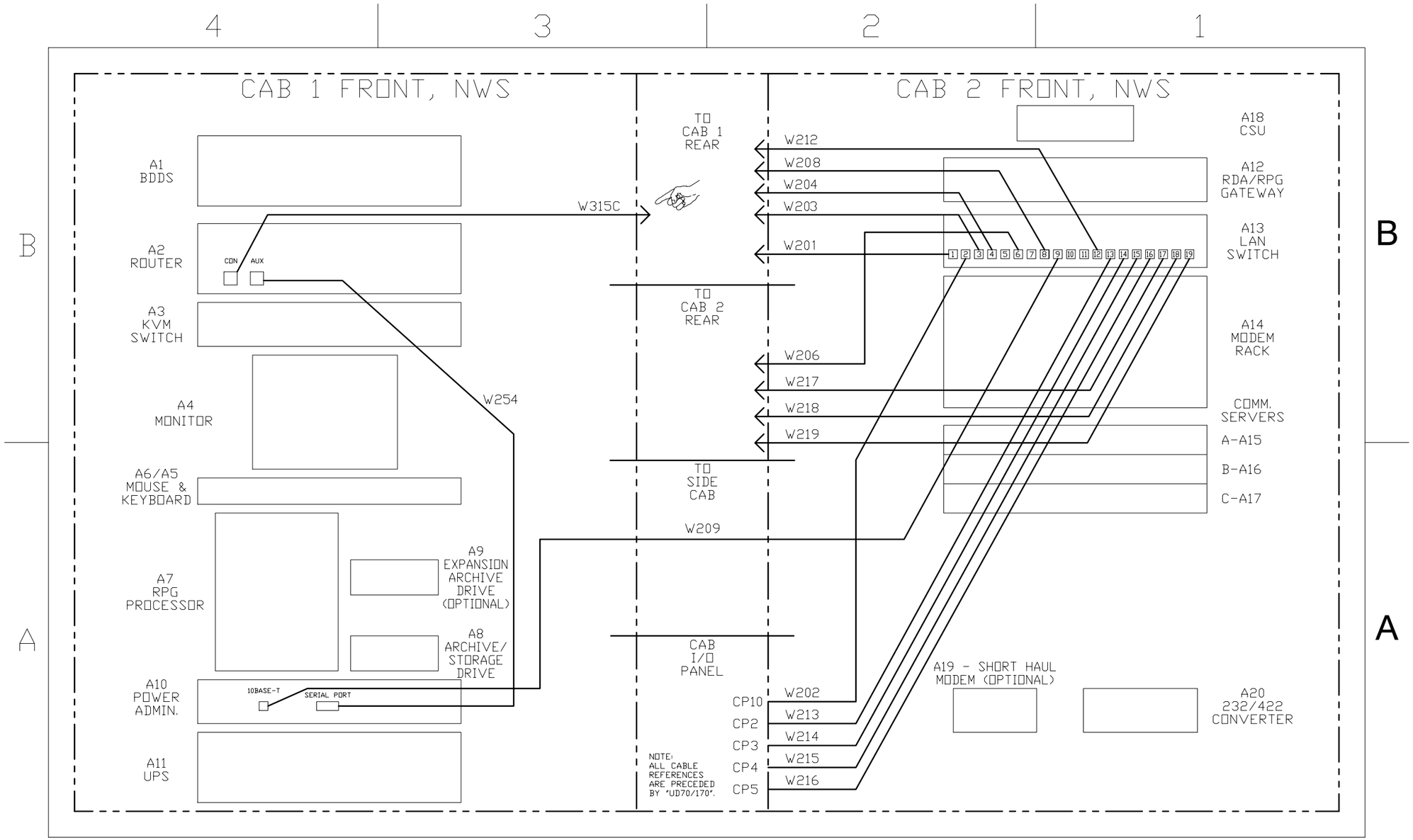

Figure FO7–3. RPGPCA Data Cables, NWS UD70 (Sheet 1 of 2)

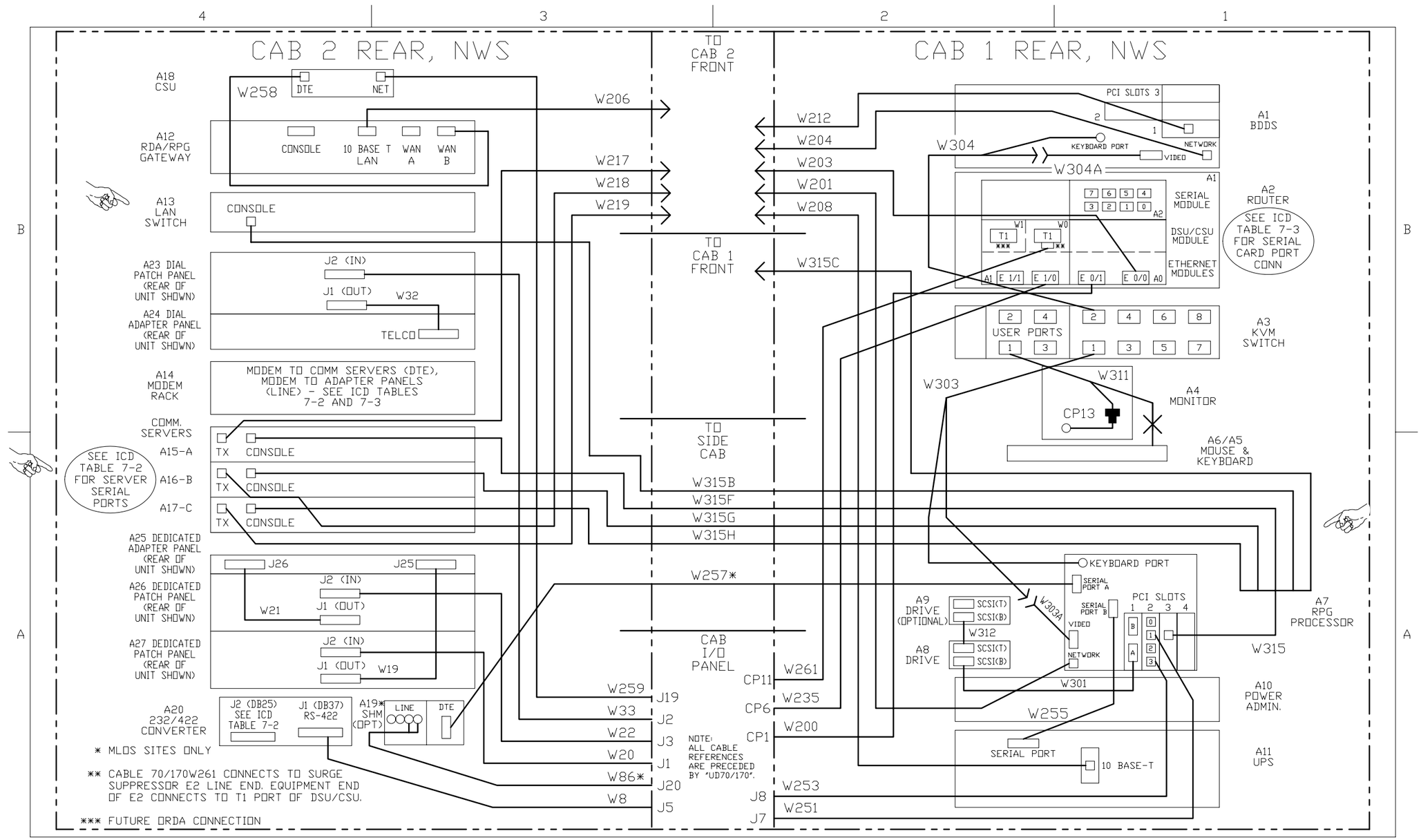

Figure FO7–3. RPGPCA Data Cables, NWS UD70 (Sheet 2 of 2)

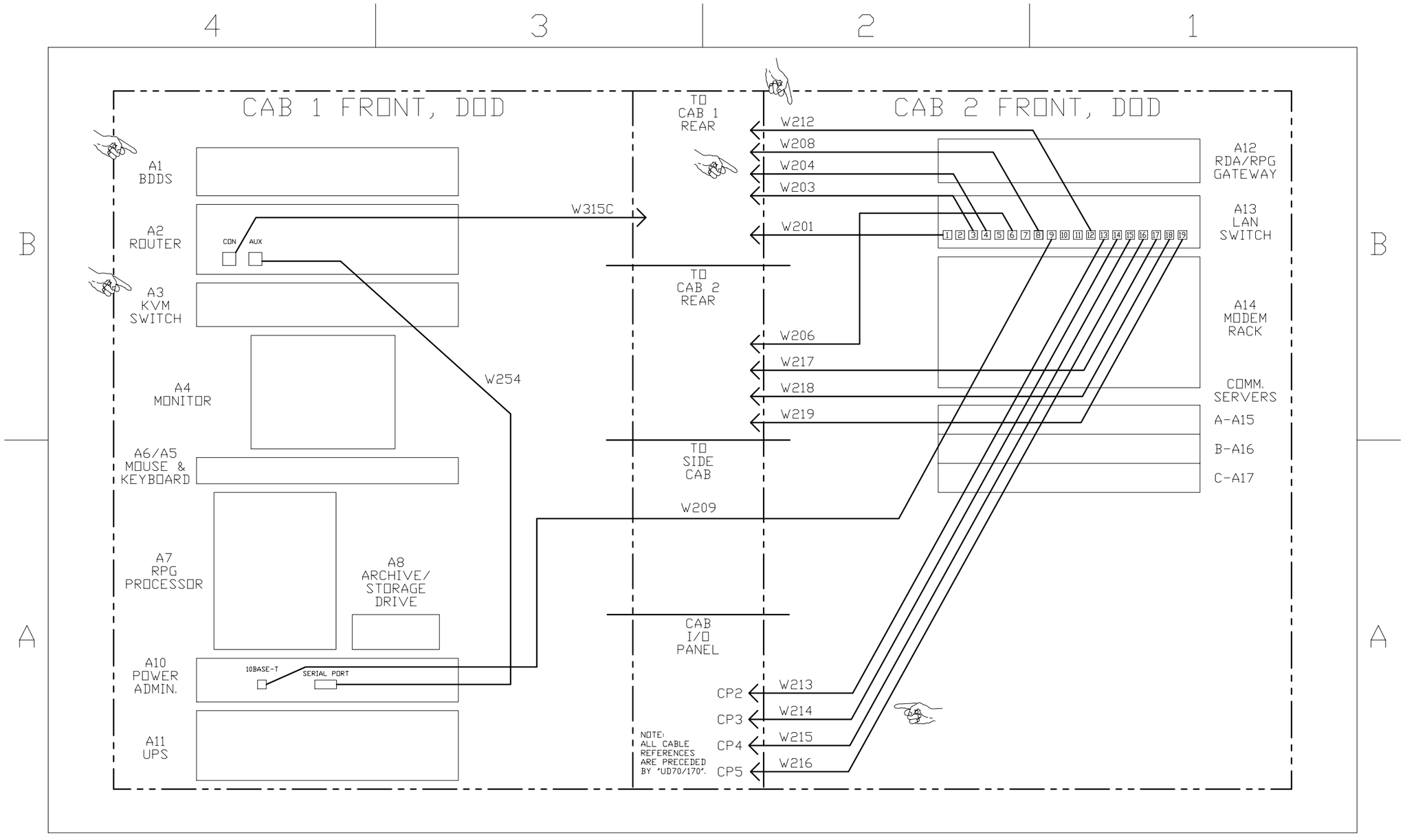

NX1665

Figure FO7–4. RPGPCA Data Cables,
DoD UD70 (Sheet 1 of 2)

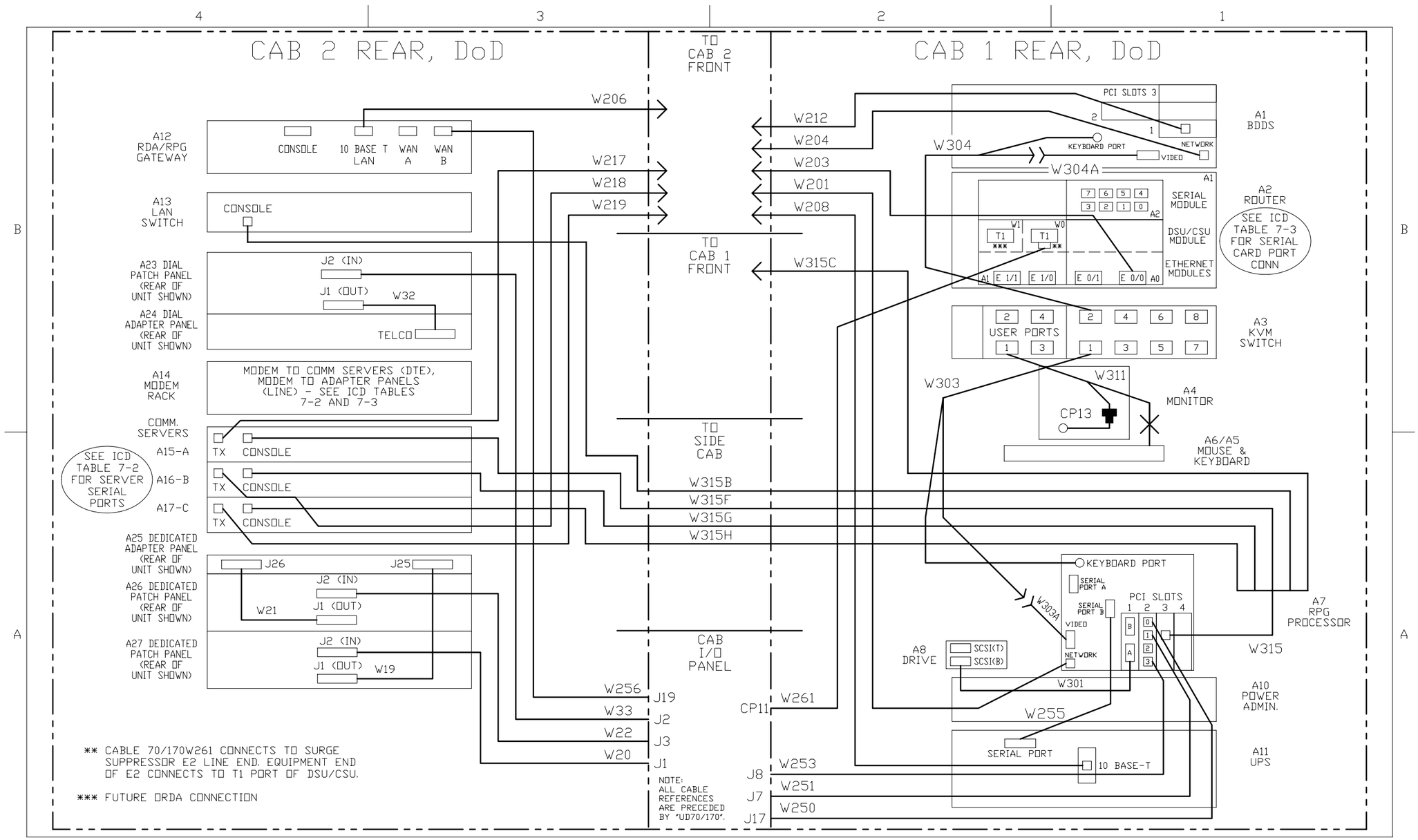

Figure FO7–4. RPGPCA Data Cables, DoD UD70 (Sheet 2 of 2)

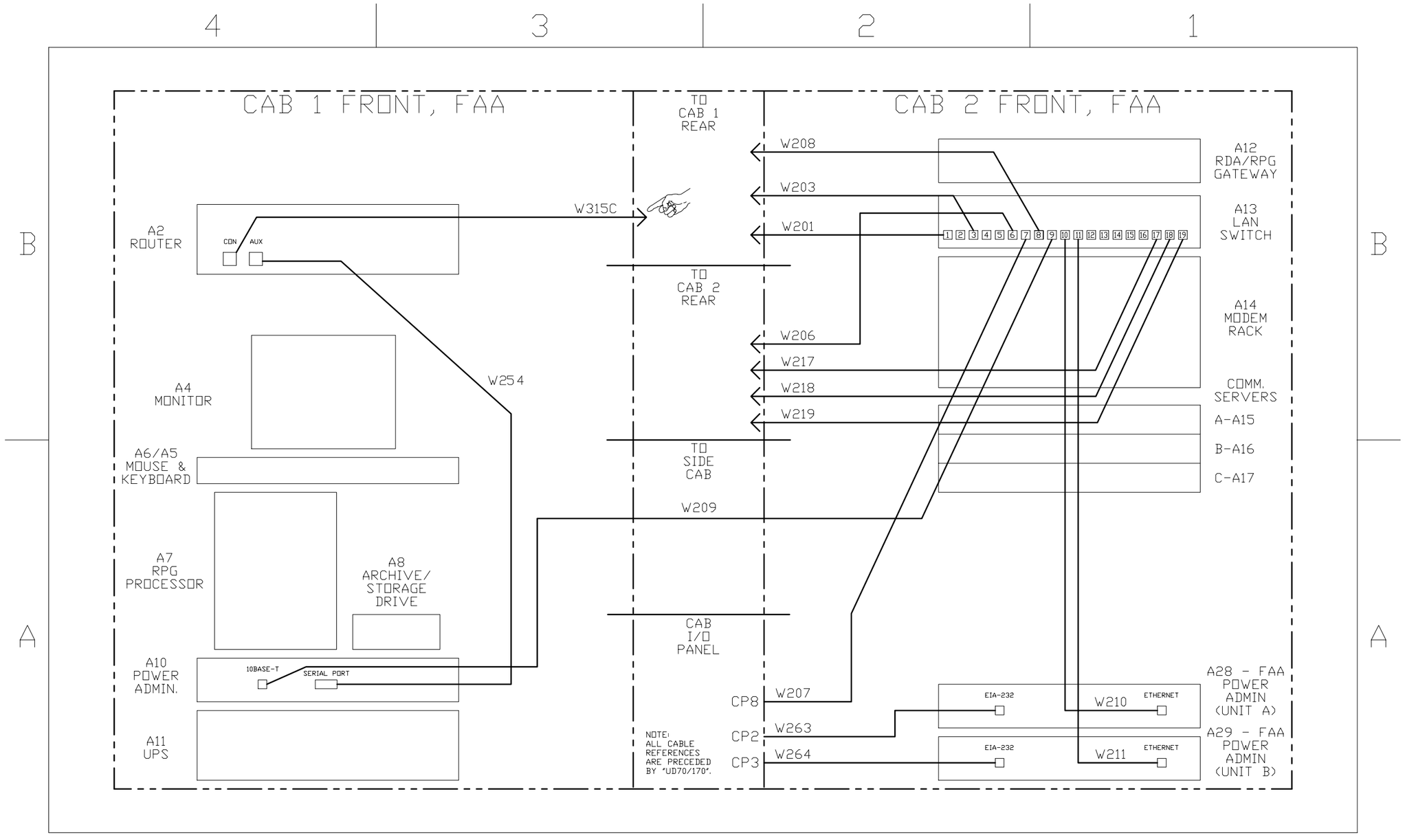

Figure FO7–5. RPGPCA Data Cables, FAA UD70/170 (Sheet 1 of 2)

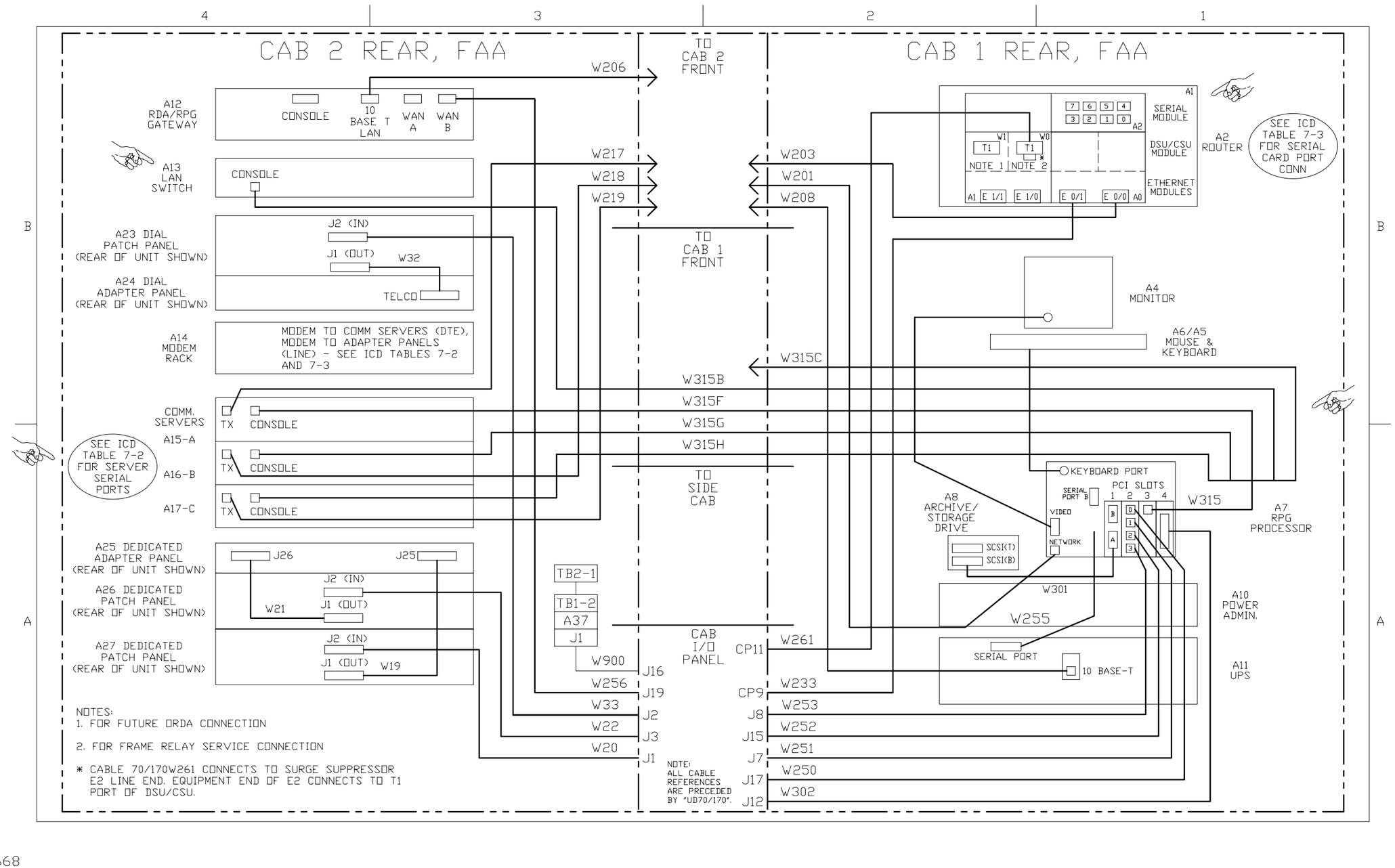

Figure FO7–5. RPGPCA Data Cables, FAA UD70/170 (Sheet 2 of 2)

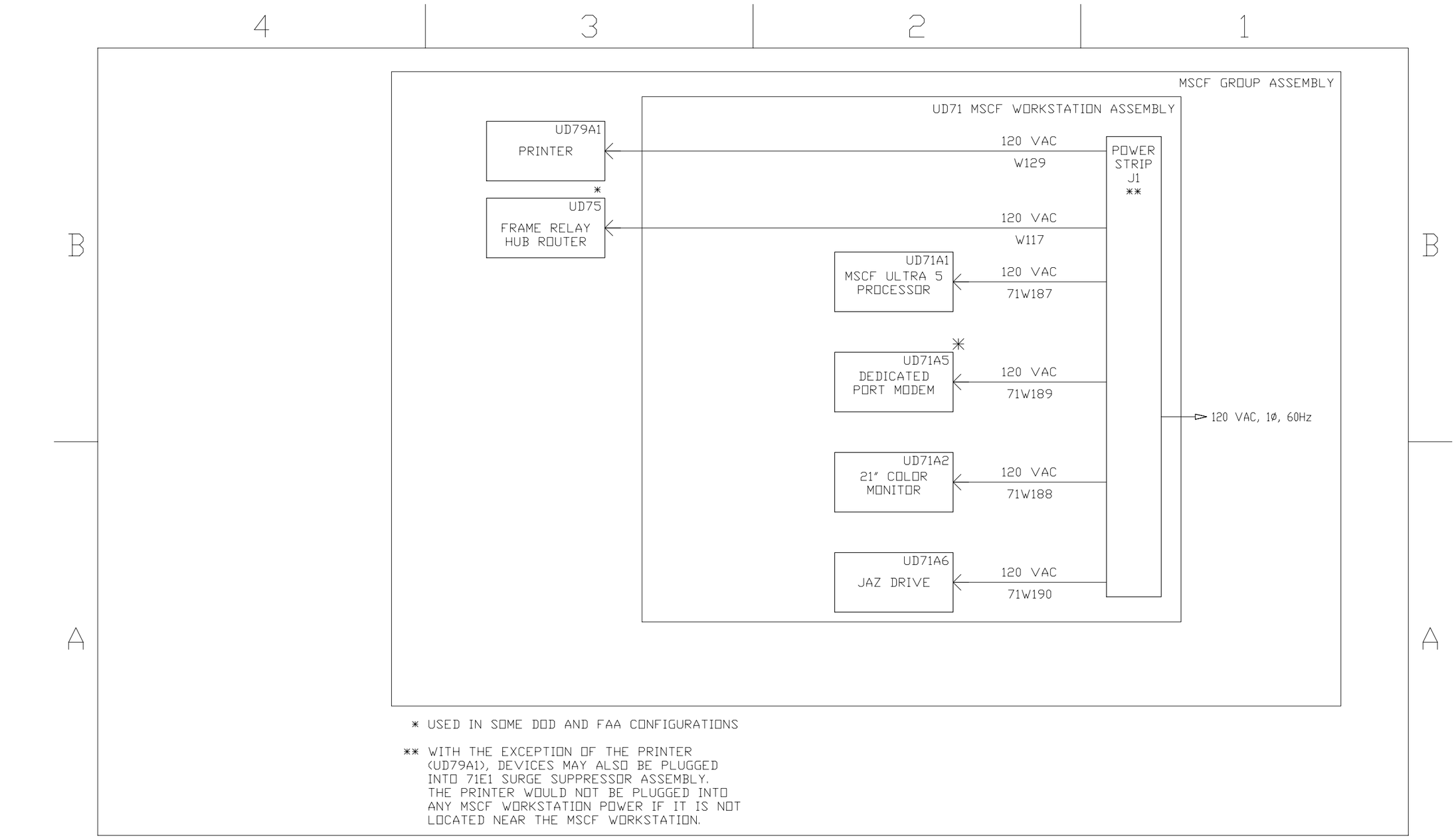

Figure FO7–6. MSCF Group Assembly Power Distribution

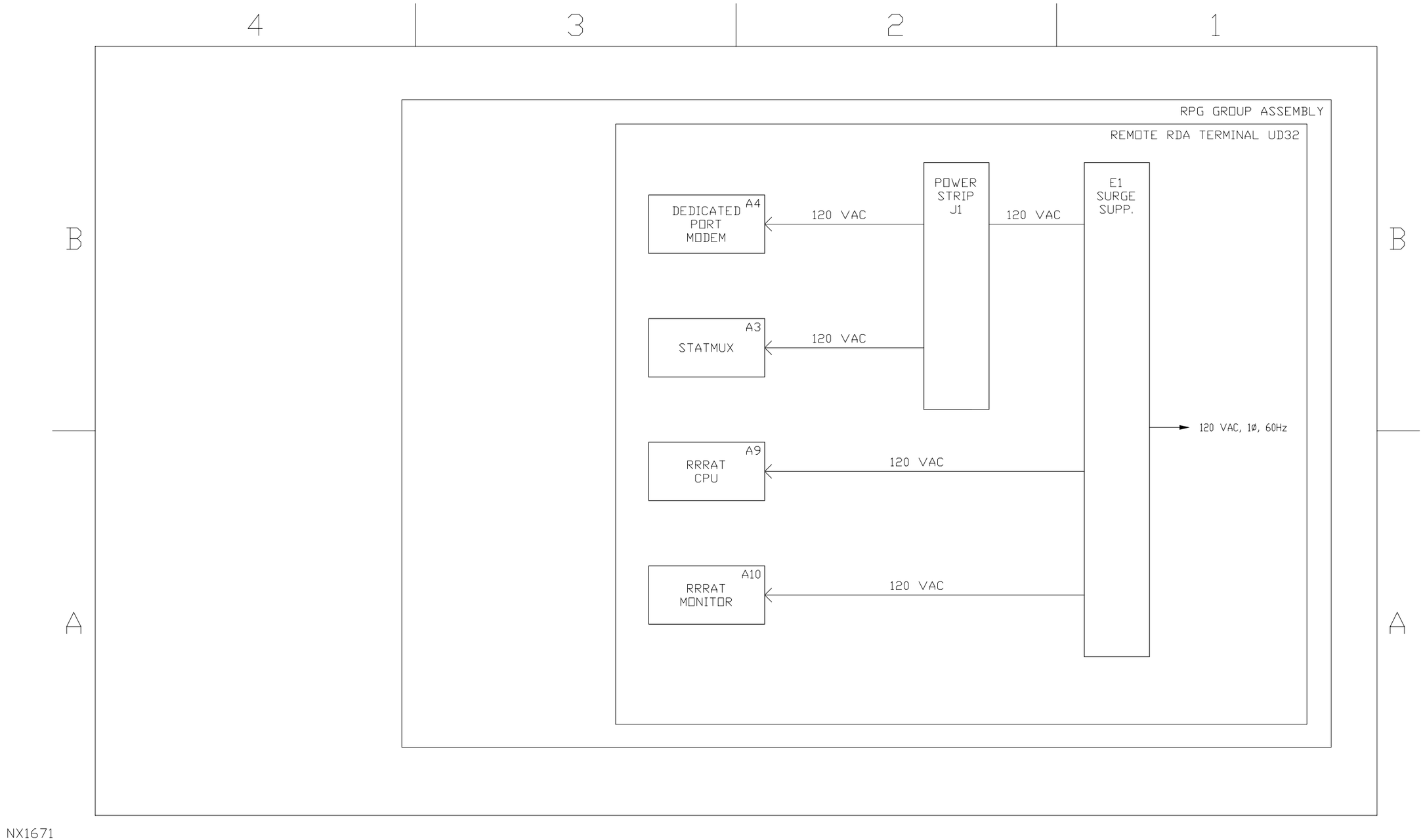

Figure FO7–7. NWS Redundant Remote RDA Maintenance Terminal Power Distribution

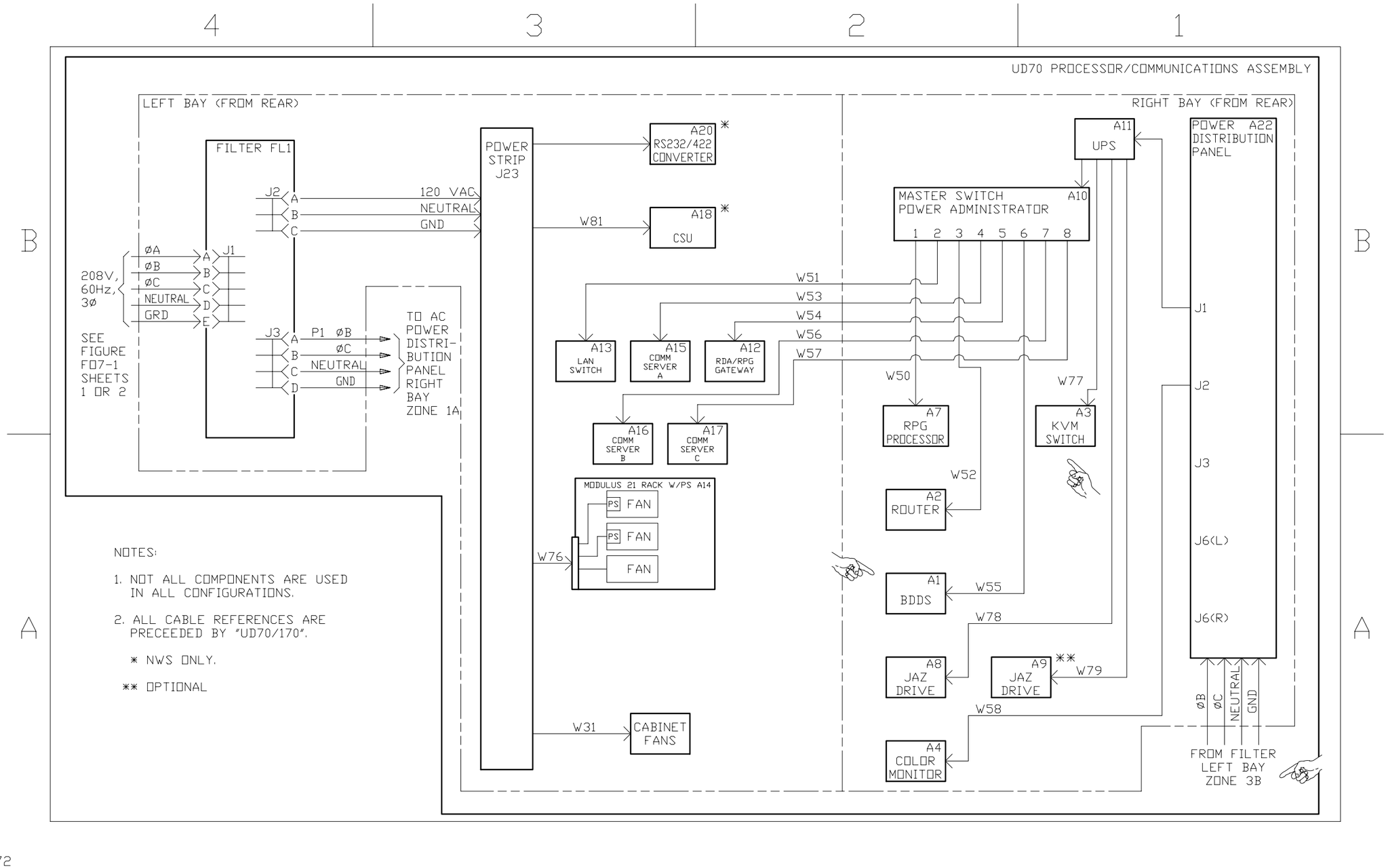

Figure FO7–8. RPG Processor/Communications Assembly UD70 Power Distribution (NWS and DoD)

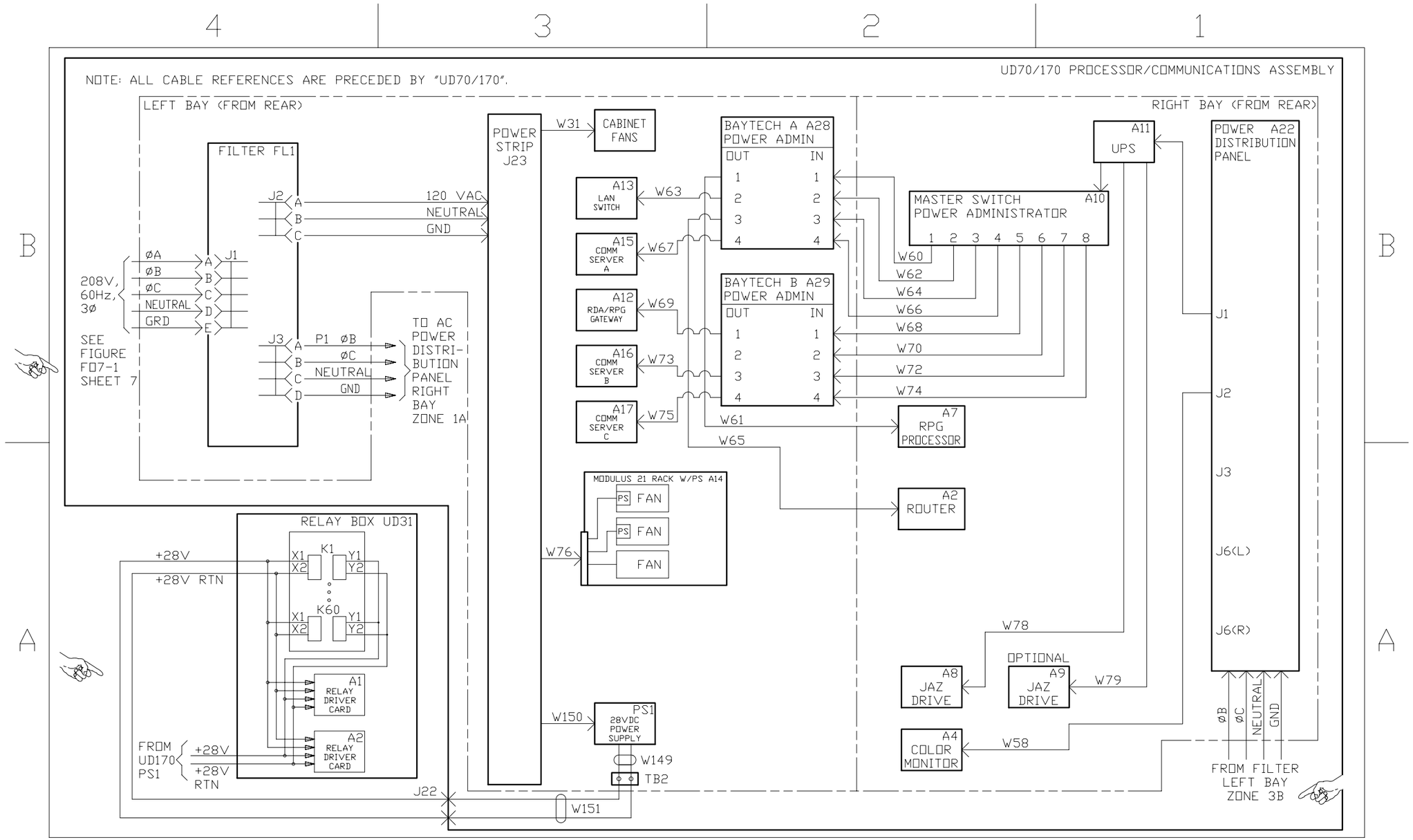

Figure FO7–9. RPG Processor/Communications Assembly
UD70/170 Power Distribution (FAA Redundant)

INDEX

Subject — Paragraph Figure, Table Number

A

A/B Switch, Replacement Procedure 6.5.6

AC Power Distribution Panel 5.11.4.1
  Replacement Procedure 6.5.32

AC Power Distribution Panel, Controls and Indicators . . . . . Table 4–24

Acquire Radar Data, CPCI 03 . . . . . 1.3.2.1

Active Site Specific
  Dedicated Communications Circuits . . . . . Table 6–1
  Dial Communications Circuits . . . . . Table 6–1

Active TCP/IP Network Dedicated Connections for Site . . . . . Table 6–2

ACU 5.6.3.3

Adapt Times, HCI 4.7.2.7.8

Admintool 4.2.3.3.1
  Addition of Groups . . . . . Table 4–82
  Addition of Users . . . . . Table 4–83

Alarm Area 4.7.2.2.1

Alarm Area, RDA Alarms Window . . . . . Figure 4–55

Alarms 4.7.2.3.1.2

Alignments and Adjustments 6.1.6

AnswerBook2 . . . . . 4.2.3.3.2
  4.3.2.1.3.2

Antenna Azimuth Position Display 4.7.2.2.6

Applications Area 4.7.2.1
  Base Data 4.7.2.1.1
  Bypass Map 4.7.2.1.3
  Clutter Regions 4.7.2.1.2
  Console Messages 4.7.2.1.6
  Environ Winds 4.7.2.1.7
  HCI Properties
    Change Colors Window 4.7.2.1.8.2
    Change Passwords Window 4.7.2.1.8.1
    Figure 4–53

Subject	Paragraph Figure, Table Number
Applications – Continued	
HCI Properties – Continued	
Font Properties Window	4.7.2.1.8.3 Figure 4–54
HCI Properties Manager Window	4.7.2.1.8 Figure 4–52
PRF Selection	4.7.2.1.4
RDA P/M Data	4.7.2.1.5
RDA P/M Data, RDA Performance Data Window	Figure 4–41
RDA Antenna/Pedestal Performance Data Window	Figure 4–42
RDA Calibration Check Performance Data Window	Figure 4–44
RDA Calibration Performance Data Window	Figure 4–43
RDA Device Status Performance Data Window	Figure 4–45
RDA Disk File Status Performance Data Window	Figure 4–46
RDA Receiver/Signal Processor Performance Data Window	Figure 4–47
RDA Tower Utilities Performance Data Window	Figure 4–48
RDA Transmitter Performance Data Window	Figure 4–49
RDA Wideband Communications Performance Data Window	Figure 4–50
Archive II	
Archive Base Data	4.7.2.3.3
Archive Base Data Data Flow	4.7.2.3.5
Starting/Stopping Base Data Recording	4.7.2.3.4
Archive II Window	
HCI	Figure 4–60
Record Base Data Window	Figure 4–61
Archive III	
Archive Products	4.7.2.4.2
Archive III Status	4.7.2.4.2.3
Archive One Product	4.7.2.4.2.5
Archive Products by Time Span	4.7.2.4.2.4
Auto Archive Control/Status	4.7.2.4.2.2
Read from Archive	4.7.2.4.2.1
Archive Products Data Flow	4.7.2.4.4
Archive Products Status Lines	4.7.2.4.3
Archive III Control/Status Window	Figure 4–66
Archive Storage Device	
Description	1.2.2.1.5
Purpose	1.1.3.6
Replacement Procedure	6.5.19
Archive Storage Device, Controls and Indicators	Table 4–13
Asynchronous and Synchronous Serial Data Transmission	5.6.3.6

Subject — Paragraph Figure, Table Number

Audio Alarms 4.7.2.7.6
Auto Archive Control/Status 4.7.2.4.2.2
Auto PRF 4.7.2.7.3

B

Backup of User Account Directories 4.6.4.5
Backup of Software
  Backup of BDDS User Account Directories Using tar . . . . . Table 4–61
  Backup of MSCF User Account Directories Using tar . . . . . Table 4–62
  Backup of RPG User Account Directories Using tar . . . . . Table 4–62
  MSCF Applications Software Backup . . . . . Table 4–60
  RPG Adaptation Data Backup . . . . . Table 4–63
  . . . . . Table 4–64
  RPG Applications Software Backup . . . . . Table 4–59
  System Software Backup Using ufsdump (Example) . . . . . Table 4–58
Backup Storage Device
  Controls and Indicators . . . . . Table 4–29
  Replacement Procedure 6.5.49
Base Data 4.7.2.1.1
Basic Modem Theory
  Asynchronous and Synchronous Serial Data Transmission 5.6.3.6
  Full or Half Duplex Transmission Modes 5.6.3.5
  Modem Reception 5.6.3.2
  Modem Transmission 5.6.3.1
  Phone Lines 5.6.3.4
  Theory of Operation 5.6.3
BDDS Equipment, Controls and Indicators, BDDS Processor . . . . . Figure 4–14
BDDS Functional Block Diagram . . . . . Figure FO5–9
BDDS Processor
  CD–ROM Drive Replacement 6.5.43
  Controls and Indicators . . . . . Table 4–7
  CPU, Theory of Operation 5.8.3
  Description 1.2.2.1.1
  Floppy Drive Replacement 6.5.42
  Function 5.2.1.5
  Hard Disk Replacement 6.5.44
  I/O Connectors and External Interconnects, Theory of Operation 5.8.7
  Internal Bus Structure, Theory of Operation 5.8.5
  Internal Peripherals, Theory of Operation 5.8.6

Subject | Paragraph Figure, Table Number

BDDS Processor – Continued
Memory, Theory of Operation 5.8.4
PCI Card, Theory of Operation 5.8.8
Power Off/On Procedures
MSCF Power Control Window 4.9.4.1
Out–Of–Bandwidth Telnet 4.9.4.3
Telnet 4.9.4.2
Purpose 1.1.3.1
Recovery Procedures 4.9.2
Replacement Procedure 6.5.9
Serial Ports, Theory of Operation 5.8.9
Setup Procedure 6.6.4
Software
Abnormal Processor System Reinitialization Procedure . . . . . Table 4–79
Addition of Groups . . . . . Table 4–82
Addition of Users . . . . . Table 4–83
Backup of BDDS User Account Directories Using tar . . . . . Table 4–61
BDDS Processor UD70A1 Full System Software Load . . . . . Table 4–53
Date/Time Set Process . . . . . Table 4–77
Find and Clean Out Core Dumps . . . . . Table 4–80
Load of New BDDS Applications Software . . . . . Table 4–57
Normal Processor System Reinitialization Procedure . . . . . Table 4–78
Restoral of BDDS User Account Directories Made Using tar . . . . . Table 4–69
Starting the BDDS Software . . . . . Table 4–49
Stopping the BDDS Software . . . . . Table 4–48
System Software Backup Using ufsdump (Example) . . . . . Table 4–58
System Software Restoral Using ufsrestore (Example) . . . . . Table 4–65

BDDS Processor, Overview of LRUs . . . . . Figure 6–13

Boot Sequence, Example . . . . . Table 4–1

Boot Terminal Keyboard Functions 4.2.4.1

Buttons 4.2.3.2.4

Bypass Map 4.7.2.1.3

C

Cable Wiring Data 7.2.1

Cabling and Connector Problems 6.3.2.10

Calib Button 4.7.2.7.4

Calib Button, Reflectivity Calibration Window . . . . . Figure 4–58

Subject | Paragraph Figure, Table Number

CD–ROM Drive Replacement
Ultra 10 Processor 6.5.17
Ultra 5 Processor 6.5.43

CDE 4.2.3.1
Command Line Login 4.3.1.4.1
Control Panel 4.3.2.1.1
Help Utilities 4.3.2.1.3
AnswerBook2 . . . . . 4.3.2.1.3.2
Login 4.3.1.4.2
Control Workspace Menu 4.3.2.1.2

CDE Login Screen . . . . . Figure 4–9

CDT–100
Parameter Options . . . . . Table 6–7
Special Function Characters . . . . . Table 6–8

CDT–100, Main Setup Menu . . . . . Figure 6–4

CDT–100, Terminal Setup Configuration Procedure 6.5.5.4

Change Colors Window 4.7.2.1.8.2

Change Passwords Window 4.7.2.1.8.1

Change Password Window . . . . . Figure 4–5

Change Passwords Window, HCI . . . . . Figure 4–53

Clutter Regions 4.7.2.1.2

Color Printer
Clearing Paper Jams . . . . . Table 6–4
Print Quality Problems . . . . . Table 6–4
Replacement Procedures
Printer UD79A1 . . . . . 6.5.52
Toner, Fuser Kit, Imaging Unit, Transfer Roll or Main Charge Grid . . . . . Table 6–4
Setup Procedure 6.6.23
Troubleshooting Front Panel Error Codes . . . . . Table 6–4
Troubleshooting Internal Printer Problems . . . . . Table 6–3

Color Printer, Controls and Indicators . . . . . Table 4–31

Color Printer, Interior Diagram . . . . . Figure 6–14

Color–coding 4.2.3.2.6

Command Line Login 4.3.1.4.1

Command Line–Based Support, Help Utilities 4.3.2.2.1

Subject	Paragraph Figure, Table Number

Commands, UNIX OS
! 4.3.4.3.1
alias 4.3.4.3.7
cal 4.3.4.3.13
cancel 4.3.4.3.10
cat 4.3.4.3.4
4.3.4.3.5
cd 4.3.4.3.2
chgrp 4.3.4.3.9
chmod 4.3.4.3.9
chown 4.3.4.3.9
compress 4.3.4.3.11
cp 4.3.4.3.6
crontab 4.3.4.3.14
cut 4.3.4.3.6
date 4.3.4.3.13
dd 4.3.4.3.6
df 4.3.4.3.8
diff 4.3.4.3.4
dmesg 4.3.4.3.8
du 4.3.4.3.8
echo 4.3.4.3.7
eject 4.3.4.3.11
env 4.3.4.3.7
find 4.3.4.3.3
ftp 4.3.4.3.12
grep 4.3.4.3.3
gzip 4.3.4.3.11
halt 4.3.4.3.14
head 4.3.4.3.4
history 4.3.4.3.1
init 4.3.4.3.14
kill 4.3.4.3.14
lp 4.3.4.3.10
lpstat 4.3.4.3.10
ls 4.3.4.3.4
man 4.3.4.3.1
mkdir 4.3.4.3.5
more 4.3.4.3.4
mount 4.3.4.3.8
mountall 4.3.4.3.8
mv 4.3.4.3.6
passwd 4.3.4.3.13

Subject | Paragraph Figure, Table Number

Commands, UNIX OS – Continued
pg 4.3.4.3.4
ping 4.3.4.3.12
prtconf 4.3.4.3.8
ps 4.3.4.3.8
pwd 4.3.4.3.2
reboot 4.3.4.3.14
Redirection Symbols 4.3.4.3.5.1
script 4.3.4.3.4
sdiff 4.3.4.3.4
set 4.3.4.3.7
setenv 4.3.4.3.7
snoop 4.3.4.3.14
source 4.3.4.3.7
stty 4.3.4.3.7
su 4.3.4.3.14
sync 4.3.4.3.14
tail 4.3.4.3.4
tar 4.3.4.3.11
telnet 4.3.4.3.12
touch 4.3.4.3.5
ufsdump 4.3.4.3.11
ufsrestore 4.3.4.3.11
uname 4.3.4.3.8
uncompress 4.3.4.3.11
vi 4.3.5
which 4.3.4.3.1
who 4.3.4.3.8
4.3.4.3.13
whoami 4.3.4.3.13

Comms Button 4.7.2.6.2

Comms Button, Product Distribution Communications Status Window . . . . . Figure 4–69

Communication Interface Diagram . . . . . Figure FO7–1

Communications Interface Functional Block Diagram . . . . . Figure FO5–6

Communication Recovery Procedures 4.9.5
Narrowband Recovery Procedure 4.9.5.1
Wideband Recovery Procedure 4.9.5.2

Subject | Paragraph Figure, Table Number

Communication Server
Configuration Procedure 6.6.18.3
Controls and Indicators . . . . . Table 4–20
Description 1.2.2.1.10
Ethernet Interface, Theory of Operation 5.5.4.1
Front/Rear Panel Indicators, Theory of Operation 5.5.4.5
Line Drivers/Serial Ports, Theory of Operation 5.5.4.4
Loopback Tests 4.8.3
Example Execution of Loopback Tests 4.8.3.2
Loopback Cables 4.8.3.1
Loopback Tests, Logical Link Mapping . . . . . Table 4–91
Memory, Theory of Operation 5.5.4.3
Power Off/On Procedures
MSCF Power Control Window 4.9.4.1
Out–Of–Bandwidth Telnet 4.9.4.3
Telnet 4.9.4.2
Processors/Communication Controllers
Internal Busses, Theory of Operation 5.5.4.2.3
Master QUICC, Theory of Operation 5.5.4.2.1
Slave QUICC, Theory of Operation 5.5.4.2.2
Theory of Operation 5.5.4.2
Purpose 1.1.3.12
Reboot Procedures 4.9.3.5
Replacement Procedure 6.5.28
Setup Procedure 6.6.18
Theory of Operation 5.5.4

Communication Server Configuration Procedure 6.6.18.3

Communication Server Narrowband Processing, Theory of Operation 5.5.5

Communications, Function 5.2.1.4

Component Location and Identification 6.1.7

Console Messages 4.7.2.1.6

Console Messages, HCI . . . . . Figure 4–51

Consumables/Expendables 1.4.6

Control
Moments 4.7.2.3.1.1.2
RDA 4.7.2.3.1.1
4.7.2.4.1.1
Reflectivity Calibration 4.7.2.3.1.1.1

Subject	Paragraph Figure, Table Number
Control, RDA	
Moments	Figure 4–59
Reflectivity Calibration	Figure 4–58
Control System, CPCI 03	1.3.2.4
Controls	
CDE	4.2.3.1.3
Graphical RPG Applications Software	
Controls	4.2.3.2.9
HCI Window Menu Controls	4.2.3.2.9
Occupy Workspace Menu Controls	4.2.3.2.9
Workspace Menu	4.2.3.2.9
	4.2.3.2.10
Controls and Indicators	4.4
17 Inch Monitor	Table 4–10
21 Inch Monitor	Table 4–27
AC Power Distribution Panel	Table 4–24
Archive Storage Device	Table 4–13
Backup Storage Device	Table 4–29
BDDS Processor	Table 4–7
Color Printer	Table 4–31
Communication Server	Table 4–20
CSU	Table 4–21
Dedicated Port Modem (Rack Mounted)	Table 4–19
Dial Port Modem (Rack Mounted)	Table 4–19
Dial Port Modem (Stand Alone)	Table 4–6
Dual A/B Switch	Table 4–4
Frame Relay Hub Router	Table 4–30
General	4.4.1
Keyboard and Mouse	Table 4–11
KVM Switch	Table 4–9
LAN Switch	Table 4–17
Modem Rack Assembly	Table 4–18
MSCF Modem	Table 4–28
MSCF Processor	Table 4–26
MSCF Workstation	4.4.4
Frame Relay Hub Router (Cisco 2621 XM)	4.4.4.6
Power Administrator	Table 4–14
RDA/RPG Gateway	Table 4–16
Remote Maintenance Terminal	Table 4–3
RMS Power Administrator	Table 4–25
Router	Table 4–8
RPG Processor	Table 4–12

Subject — Paragraph Figure, Table Number

Controls and Indicators – Continued
RS–232/RS–422 Converter . . . . . Table 4–23
Short Haul Modem . . . . . Table 4–22
STATMUX . . . . . Table 4–5
UPS . . . . . Table 4–15

Controls, Graphical RPG Applications Software
HCI Window Menu Controls . . . . . Figure 4–6
Occupy Workspace Dialog Box . . . . . Figure 4–7
Workspace Menu . . . . . Figure 4–8

Corrective Maintenance 6.1.5

COTS Software, CPCI 12 . . . . . 1.3.3

CPCI 03 . . . . . 1.3.2
Interface Requirements
Hardware Interfaces 1.3.2.5.1
Operational Computer Program Interfaces 1.3.2.5.2

CPCI 12 . . . . . 1.3.3

CPCI 23 . . . . . 1.3.4

CSU 5.5.3.3
Replacement Procedure 6.5.29

CSU, Controls and Indicators . . . . . Table 4–21

CSU/DSU
Description 1.2.2.1.8
Purpose 1.1.3.9

D

Dedicated Adapter Panel, Replacement Procedure 6.5.35

Dedicated Communications Circuits, Active Site Specific . . . . . Table 6–1

Dedicated Connections for Site, Active TCP/IP Network . . . . . Table 6–2

Dedicated Lines 5.6.4.4
5.6.5.3
Dedicated Line Interface 5.6.4.4.1
5.6.5.3.1

Dedicated Patch Panel, Replacement Procedure 6.5.36,
6.5.37

Subject | Paragraph Figure, Table Number

Dedicated Port Modem (Rack–Mounted) 5.6.4.4
5.6.5.3
Controls and Indicators . . . . . Table 4–19
Replacement Procedure 6.5.26

Dedicated Port Modem (Stand–alone), MSCF . . . . . Figure 6–22
Replacement Procedure 6.5.48
Setup Procedure 6.6.21

Dedicated/Dial Modem Rack
Front Door Hinge Detail . . . . . Figure 6–9
Power Supply/Fan Module Removal . . . . . Figure 6–10
Power Supply/Fan Module, Replacement Procedure 6.5.27
Replacement Procedure 6.5.27

Dedicated/Dial Modem Rack Assembly, Purpose 1.1.3.11

Dedicated/Dial Port Modem, Front Panel and DIP Switch Location . . . . . Figure 6–21

Diagnostic Test Program Procedures 6.1.11

Diagnostic Tests
Communication Server, Loopback 4.8.3
Example Execution of Loopback Tests 4.8.3.2
Logical Link Mapping . . . . . Table 4–91
Loopback Cables 4.8.3.1
Sun Ultra 5/10 Diagnostics
Open Boot PROM Diagnostics 4.8.2.3
OBDiag Diagnostic Tool 4.8.2.3.2
OBDiag Execution . . . . . Table 4–90
Stand–Alone Boot PROM Diagnostics 4.8.2.3.1
POST 4.8.2.2
POST Display Methods 4.8.2.2.1
POST Execution 4.8.2.2.2
POST Keyboard Light Indications . . . . . Table 4–87
POST Termination 4.8.2.2.3

Dial Adapter Panel, Replacement Procedure 6.5.34

Dial Communications Circuits, Active Site Specific . . . . . Table 6–1

Dial Lines 5.6.4.3
5.6.5.2
Dial Line Interfaces 5.6.4.3.1
5.6.5.2.1

Dial Patch Panel, Replacement Procedure 6.5.33

Subject — Paragraph Figure, Table Number

Dial Port Modem (Rack Mounted)
Controls and Indicators . . . . . Table 4–19
Replacement Procedure 6.5.26

Dial Port Modem (Stand–alone), Remote RDA
Controls and Indicators . . . . . Table 4–6
Replacement Procedure 6.5.8

Dial Port Modem UD32A4, Theory of Operation 5.10.5

Dial–In Modem (Codex 3260) 14400/Async, Remote RDA, Setup Procedure 6.6.3

Directory Structure, UNIX OS 4.3.3.1

Distant MSCF 4.2.2.2
Communications 1.2.4.1.2
DOD Collocated RDA/RPG with Frame Relay 1.1.5.2
DOD Collocated RDA/RPG without Frame Relay 1.1.5.2
FAA Collocated RDA/RPG with Frame Relay 1.1.5.2
FAA Collocated RDA/RPG without Frame Relay 1.1.5.2
Purpose 1.1.5.2

Distribute Products, CPCI 03 . . . . . 1.3.2.3

DoD, Distant MSCF Communications 1.2.4.1.2

DoD Collocated RDA/RPG
With Frame Relay 1.1.5.2
Without Frame Relay 1.1.5.2

DoD, RPG Simplified Block Diagram . . . . . Figure FO5–2

DSU/CSU Module UD70A2A1A1W0 . . . . . 5.3.3.2.1

Dual A/B Switch
Controls and Indicators . . . . . Table 4–4
Replacement Procedure 6.5.6

Dual A/B Switch UD32A2, Theory of Operation 5.10.3

E

Embedded Console Server 1.1.2.7

Emergency/Recovery Procedures 4.9
Introduction 4.9.1

Environ Winds 4.7.2.1.7

Subject	Paragraph Figure, Table Number
Equipment	
MSCF	4.4.4
	4.4.5
Remote RDA Maintenance Terminal	4.4.2
RPGPCA	4.4.3
Equipment and Tools Required	
RMS Power Administrator	6.6.19.1
Router Assembly (Cisco 3640) Setup Procedure	6.6.5.1
Equipment Supplied	1.4.2

F

FAA	
Distant MSCF Communications	1.2.4.1.2
Unique Equipment	1.2.2.2
Relay Box	1.2.2.2.2
RMS Power Administrator	1.2.2.2.1
FAA Collocated RDA/RPG	
With Frame Relay	1.1.5.2
Without Frame Relay	1.1.5.2
FAA Redundant Systems	4.7.4.2
Switching Channels from the Distant MSCF	Table 4–86
Switching Channels from the RPG Maintenance Terminal	Table 4–85
FAA, RPG Simplified Block Diagram	Figure FO5–3
Fault Isolation, Secondary	6.4.1
Fault Isolation Flowcharts	6.3.2
Cabling and Connector Problems	6.3.2.10
Flowchart Comments	6.3.2.5
Flowchart Notesheets	6.3.2.6
Flowchart Symbol Convention	6.3.2.8
Narrowband Configuration Tables	6.3.2.9
Operability Test	6.3.2.3
Quick Reference Chart	6.3.2.4
RPG Fault Isolation Flowchart	6.3.2.2
Secondary Fault Isolation	6.3.2.7
System Fault Isolation Flowchart	6.3.2.1
Feedback Control Relay K55	
Telephone Demarcation	5.7.5.1
Theory of Operation	5.7.5

Subject	Paragraph Figure, Table Number
Floppy Drive Replacement	
Ultra 10 Processor	6.5.16
Ultra 5 Processor	6.5.42
Flowchart	
Comments	6.3.2.5
Note Index	Table 6–3
Notes	6.3.3
Notesheets	6.3.2.6
Symbol Convention	6.3.2.8
Font Properties Window, HCI	4.7.2.1.8.3 Figure 4–54
Four/Eight Port Serial Card Driver Load	4.6.6.3
Frame Relay	
DOD Collocated RDA/RPG	1.1.5.2
FAA Collocated RDA/RPG	1.1.5.2
Hub Router	1.1.5.3
Hub Router (Cisco 2621XM) UD75	4.4.4.6
Frame Relay Hub Router	
Controls and Indicators	Table 4–30
Purpose	1.1.5.3
Frame Relay Hub Router (Cisco 2621XM) UD75A1 Controls and Indicators	Table 4–30
Front Panel	4.2.3.1.5
Full or Half Duplex Transmission Modes	5.6.3.5
Full System Software Load Procedures	
BDDS Processor UD70A1	Table 4–53
MSCF Processor UD71A1	Table 4–54
RPG Processor UD70A7	Table 4–52
Functional Block Diagram	
BDDS	Figure FO5–9
Communications Interface	Figure FO5–6
LAN and Power Administration	Figure FO5–4
MSCF	Figure FO5–10
Narrowband Communications	
FAA	Figure FO5–8
NWS and DOD	Figure FO5–7
RPG Processor	Figure FO5–5

Subject	Paragraph Figure, Table Number
Functional Description	
Basic Modem Theory	5.6.3
BDDS Processor	5.8
CPU	5.8.3
I/O Connectors and External Interconnects	5.8.7
Internal Bus Structure	5.8.5
Internal Peripherals	5.8.6
Memory	5.8.4
PCI Cards	5.8.8
Serial Ports	5.8.9
Communication Server	5.5
Communication Server Narrowband Processing	5.5.5
Communication Server UD70A15, A16, or A17	5.5.4
Ethernet Interface	5.5.4.1
Front/Rear Panel Indicators	5.5.4.5
Line Drivers/Serial Ports	5.5.4.4
Memory	5.5.4.3
Processors/Communication Controllers	5.5.4.2
Internal Busses	5.5.4.2.3
Master QUICC	5.5.4.2.1
Slave QUICC	5.5.4.2.2
Dial Port Modem UD32A4	5.10.5
Dual A/B Switch UD32A2	5.10.3
Feedback Control Relay K55	5.7.5
General Description	
BDDS Processor	5.8.2
LAN and Power Administration	5.3.2
MSCF Processor	5.9.2
Narrowband Communications	5.6.2
RDA/RPG Gateway and Communications Server	5.5.2
Relay Box	5.7.2
RPG Processor	5.4.2
Introduction	
BDDS Processor	5.8.1
LAN and Power Administration	5.3.1
MSCF Processor	5.9.1
Narrowband Communications	5.6.1
RDA/RPG Gateway and Communications Server	5.5.1
Relay Box	5.7.1
Remote RDA Maintenance Terminal	5.10.1
RPG Processor	5.4.1
LAN	5.3
	5.3.3
LAN Switch UD70A13	5.3.3.1

Subject | Paragraph Figure, Table Number

Functional Description – Continued
MSCF Processor 5.9
CPU 5.9.3
I/O Connectors and External Interconnects 5.9.7
Internal Bus Structure 5.9.5
Internal Peripherals 5.9.6
Memory 5.9.4
PCI Cards 5.9.8
Serial Ports 5.9.9
Narrowband Communications 5.6
Power Administration 5.3
5.3.4
Power Administrator UD70A10 . . . . . 5.3.4.2
UPS UD70A11 . . . . . 5.3.4.1
Principal User Connections, FAA 5.6.5
RDA/RPG Gateway 5.5
Relay Box 5.7
Relay Drivers Circuit Board Assemblies 5.7.4
Relays K1 Through K60 . . . . . 5.7.3
Remote RDA Maintenance Terminal 5.10
Remote RDA Maintenance Terminal Monitor UD32A10 . . . . . 5.10.2
Router UD70A2 . . . . . 5.3.3.2
DSU/CSU Module, UD70A2A1A1W0 . . . . . 5.3.3.2.1
RPG Narrowband Communications, NWS and DOD 5.6.4
RPG Processor 5.4
CPU 5.4.3
I/O Connectors and External Interconnects 5.4.7
Internal Bus Structure 5.4.5
Internal Peripherals 5.4.6
KVM Switch 5.4.10
Memory 5.4.4
PCI Cards 5.4.8
RPG/RPG Interprocessor Link 5.4.11
Channel Status and Control 5.4.11.2
Redundant Task Manager 5.4.11.1
Serial Ports 5.4.9
STATMUX UD32A3 . . . . . 5.10.4
Wideband Link 5.5.3
CSU UD70A18 . . . . . 5.5.3.3
HDLC Format 5.5.3.1
RDA/RPG Gateway UD70A12 . . . . . 5.5.3.2

Functionality 1.1.2.1

Subject — Paragraph Figure, Table Number

Functions, RPG 5.2.1
BDDS Processor 5.2.1.5
Communications 5.2.1.4
LAN 5.2.1.1
MSCF 5.2.1.6
Power Administration 5.2.1.2
Processing 5.2.1.3

G

Generate Products, CPCI 03 . . . . . 1.3.2.2
Glossary of Terms 1.4.1
Graphical RPG Applications Software 4.2.3.2

H

Handling of ESDs 6.5.2.7
Hard Disk Replacement
Ultra 10 Processor 6.5.18
Ultra 5 Processor 6.5.44
Hardware Interface 1.3.2.5.1
HCI Main Menu 4.7.2
Figure 4–40
Applications Area, ... 4.7.2.1
Base Data 4.7.2.1.1
Bypass Map 4.7.2.1.3
Clutter Regions 4.7.2.1.2
Console Messages 4.7.2.1.6,
Figure 4–51
Environ Winds 4.7.2.1.7
HCI Properties 4.7.2.1.8
Figure 4–52
Change Colors Window 4.7.2.1.8.2
Change Passwords Window 4.7.2.1.8.1
Font Properties Window 4.7.2.1.8.3
PRF Selection 4.7.2.1.4
RDA P/M Data 4.7.2.1.5
Figure 4–41
RDA Area 4.7.2.3
Archive Base Data 4.7.2.3.3
Figure 4–60

Subject	Paragraph Figure, Table Number
HCI Main Menu – Continued	
RDA Area – Continued	
Archive Base Data Data Flow	4.7.2.3.5
Power Source	4.7.2.3.2
RDA Icon	4.7.2.3.1
Alarms	4.7.2.3.1.2
	Figure 4–55
Control	4.7.2.3.1.1
	Figure 4–56
Starting/Stopping Base Data Recording	4.7.2.3.4
	Figure 4–61
RPG Area	4.7.2.4
Archive Products	4.7.2.4.2
	Figure 4–66
Archive III Status	4.7.2.4.2.3
Archive One Product	4.7.2.4.2.5
Archive Products by Time Span	4.7.2.4.2.4
Auto Archive Control/Status	4.7.2.4.2.2
Read from Archive	4.7.2.4.2.1
Archive Products Data Flow	4.7.2.4.4
Archive Products Status Lines	4.7.2.4.3
RPG Icon	4.7.2.4.1
Control	4.7.2.4.1.1
	Figure 4–62
	Figure 4–63
Products	4.7.2.4.1.2
	Figure 4–64
Status	4.7.2.4.1.3
	Figure 4–65
Status Areas	4.7.2.7
Adapt Times	4.7.2.7.8
Audio Alarms	4.7.2.7.6
Auto PRF	4.7.2.7.3
Calib Button	4.7.2.7.4
Status Area, Calib Button	Figure 4–58
Load Shed	4.7.2.7.5
Precip Cat	4.7.2.7.1
RDA Messages	4.7.2.7.7
VAD Update	4.7.2.7.2
Tower/Radome Area	4.7.2.2
Tower/Radome Area, VCP Button, Control	Figure 4–56
Alarm Area	4.7.2.2.1
Antenna Azimuth Position Display	4.7.2.2.6

Subject — Paragraph Figure, Table Number

HCI Main Menu – Continued
Tower/Radome Area, VCP Button, Control – Continued
System Status Line 4.7.2.2.2
VCP Button 4.7.2.2.3
VCP Elevation Angle Display 4.7.2.2.5
Volume Status Line 4.7.2.2.4
Users Area 4.7.2.6
Comms Button 4.7.2.6.2
Figure 4–69
Narrowband Data Flow 4.7.2.6.5
Products 4.7.2.6.3
Status 4.7.2.6.4
Figure 4–71
Users Icon 4.7.2.6.1
Wideband Area 4.7.2.5
MLOS Button 4.7.2.5.5
MLOS Status Window . . . . . Figure 4–68
RDA/RPG Interface Control/Status 4.7.2.5.3
RDA/RPG Interface Control/Status Window . . . . . Figure 4–67
System Control Indicator 4.7.2.5.4
Wideband Link Data Flow 4.7.2.5.1
Wideband Status 4.7.2.5.2

HCI Properties 4.7.2.1.8
Figure 4–52
Change Colors Window 4.7.2.1.8.2
Change Passwords Window 4.7.2.1.8.1
Figure 4–53
Font Properties Window 4.7.2.1.8.3
Figure 4–54

HDLC Format, HDLC Frame Structure . . . . . Figure 5–1

HDLC Format, Wideband Link 5.5.3.1

I

Icons 4.2.3.2.3

Indicators 4.2.3.2.5

INIT Levels, Operating System (OS) 4.3.1.2

Initial Conditions/Preliminary Setup
RMS Power Administrator 6.6.19.2
Router Assembly (Cisco 3640) Setup Procedure 6.6.5.2

Subject — Paragraph Figure, Table Number

Initialization Procedures
Abnormal Reinitialization Procedure . . . . . Table 4–79
Normal Reinitialization Procedure . . . . . Table 4–78

Interconnection Cabling Diagrams (ICDs) 7.1.3
Chapter Organization 7.1.2
General 7.1.1

Interconnections
Communication Server to Modem Rack . . . . . Table 7–2
Modem Rack to Adapter Panel . . . . . Table 7–4
Router Serial Card to Modem Rack . . . . . Table 7–3

K

Keyboard, Replacement Procedure 6.5.13
6.5.46

Keyboard Functions, Non–Boot Terminal 4.2.4.2

Keyboard and Mouse, Controls and Indicators . . . . . Table 4–11

KVM Switch
Controls and Indicators . . . . . Table 4–9
Description 1.2.2.1.3
Purpose 1.1.3.3
Replacement Procedure 6.5.11
Setup Procedure 6.6.6

L

Labeling of Cables, Replacement Procedures 6.5.2.4

LAN
Function 5.2.1.1
Functional Block Diagram . . . . . Figure FO5–4
Theory of Operation 5.3.3
LAN Switch UD70A13 . . . . . 5.3.3.1
Router UD70A2 . . . . . 5.3.3.2
DSU/CSU Module UD70A2A1A1W0 . . . . . 5.3.3.2.1

LAN Switch
Controls and Indicators . . . . . Table 4–17
Configuration Procedure 6.6.10.3
Description 1.2.2.1.9
Power Off/On Procedures
MSCF Power Control Window 4.9.4.1

Subject — Paragraph Figure, Table Number

LAN Switch – Continued
Power Off/On Procedures – Continued
Out–Of–Bandwidth Telnet 4.9.4.3
Telnet 4.9.4.2
Purpose 1.1.3.10
Reboot Procedures 4.9.3.1
Replacement Procedure 6.5.25
Setup Procedure 6.6.10
LAN Switch Configuration Procedure 6.6.10.3

Leading Particulars 1.1.6

Load/Setup Procedures, Miscellaneous
Date/Time Set Process . . . . . Table 4–77
Jaz Drive Disk Format and Mounting for Archive III (Alternate Method) . . . . . Table 4–74
Jaz Drive Disk Format and Mounting for Archive III (Preferred Method) . . . . . Table 4–73
Jaz Drive Disk Format and Mounting for Backup Purposes . . . . . Table 4–75
Magna Four/Eight Port Serial Card Driver Load . . . . . Table 4–76
MSCF Dial Modem Setup . . . . . Table 4–72

Load Shed 4.7.2.7.5
Load Shed Categories Window . . . . . Figure 4–72

Loading Software
BDDS Applications Software . . . . . Table 4–57
BDDS Processor UD70A1 . . . . . Table 4–53
MSCF Applications Software . . . . . Table 4–56
MSCF Processor UD71A1 . . . . . Table 4–54
RPG Applications Software, ... Table 4–55
RPG Processor UD70A7 . . . . . Table 4–52

Local MSCF 4.2.2.1
Communications 1.2.4.1.3
Purpose 1.1.5.1

Lock Button, Password Window . . . . . Figure 4–73

Loopback Tests 4.8.3
Example Execution of Loopback Tests 4.8.3.2
Logical Link Mapping . . . . . Table 4–91
Loopback Cables 4.8.3.1

M

Magna Four/Eight Port Serial Card Driver Load . . . . . Table 4–76

Subject | Paragraph Figure, Table Number

Main Menu
HCI . . . . . Figure 4–40
RDA Icon, RDA Control Button, RDA Control/Status Window . . . . . Figure 4–57

Main Setup Menu, CDT–100 . . . . . Figure 6–4

Maintenance Concept 6.1.1.1

Man Pages 4.3.2.2.1.1

Menus 4.2.3.1.4

MLOS Button 4.7.2.5.5

MLOS Status Window, HCI . . . . . Figure 4–68

Modem
Dial–In, Remote RDA, Setup Procedure 6.6.3
MSCF Dedicated, Setup Procedure 6.6.17
Reception 5.6.3.2
Stand–Alone, MSCF, Setup Procedure 6.6.21
TCP OPUP Dedicated, Setup Procedure 6.6.16
TCP OPUP Dial–In, Setup Procedure 6.6.12
Transmission 5.6.3.1
X.25 AWIPS Dedicated, Setup Procedure 6.6.13
X.25 Dedicated, Setup Procedure 6.6.14
X.25 Dial–In, Setup Procedure 6.6.11
X.25 ITWS Dedicated, Setup Procedure 6.6.15

Modem Card, Dial and Dedicated
Rack–Mounted Modem DIP Locations . . . . . Figure 6–8
Removal and Replacement . . . . . Figure 6–7

Modem Rack Assembly UD70/170A14 . . . . . 5.6.4.2
5.6.5.1
Controls and Indicators . . . . . Table 4–18

Moments Window, HC . . . . . Figure 4–59

Mouse
Left Mouse Button 4.2.5.1
Middle Mouse Button 4.2.5.2
Replacement Procedure 6.5.14
6.5.47
Right Mouse Button 4.2.5.3

MSCF 4.2
CDE
Controls 4.2.3.1.3
Windows 4.2.3.1.1

Subject	Paragraph Figure, Table Number
MSCF – Continued	
Configurations	4.2.2
Distant	4.2.2.2
Local	4.2.2.1
Controls and Indicators	
21 Inch Monitor	Figure 4–35
Backup Storage Device	Figure 4–37
Color Printer	Figure 4–39
Keyboard and Mouse	Figure 4–18
Modem	Figure 4–36
MSCF Processor	Figure 4–34
Display	4.2.3
Admintool	4.2.3.3.1
AnswerBook2	4.2.3.3.2
Buttons	4.2.3.2.4
CDE	4.2.3.1
Color–coding	4.2.3.2.6
Controls	4.2.3.1.3
	4.2.3.2.9
	Figure 4–6
Occupy Workspace Dialog Box	Figure 4–7
Front Panel	4.2.3.1.5
Graphical RPG Applications Software	4.2.3.2
HCI, RPG Control/Status Window	4.2.3.1.5
	4.2.3.2.1
Icons	4.2.3.2.3
Indicators	4.2.3.2.5
LOCA Password Protection	4.2.3.2.8
	Figure 4–4
Password Change	4.2.3.2.8.1
	Figure 4–5
Menus	4.2.3.1.4
Netscape	4.2.3.3.3
Other Graphical Applications	4.2.3.3
PowerChute Plus	4.2.3.3.4
RPG HCI	4.2.3.2.1
	Figure 4–1
	Figure 4–2
Terminal Access Only	4.2.3.4
Warning_popup Window	Figure 4–3
Windows	4.2.3.1.1
	4.2.3.2.2
Workspace	4.2.3.1.2

Subject | Paragraph Figure, Table Number

MSCF – Continued
Display – Continued
Workspace Menu 4.2.3.2.10
Figure 4–8
Equipment 4.4.4
4.4.5
Function 5.2.1.6
Group Assembly, Power Distribution 5.11.2
Figure FO7–6
MSCF Printer Assembly 5.11.2.1
MSCF Workstation Assembly 5.11.2.2
Introduction 4.2.1
Keyboard 4.2.4
Boot Terminal Keyboard Functions 4.2.4.1
Modem
Controls and Indicators . . . . . Table 4–28
Stand–Alone, Setup Procedure 6.6.21
Mouse 4.2.5
Left Mouse Button 4.2.5.1
Middle Mouse Button 4.2.5.2
Right Mouse Button 4.2.5.3
Printer Assembly 5.11.2.1
Processor
CD–ROM Drive Replacement 6.5.43
Controls and Indicators . . . . . Table 4–26
CPU, Theory of Operation 5.9.3
Floppy Drive Replacement 6.5.42
Hard Disk Replacement 6.5.44
I/O Connectors and External Interconnects, Theory of Operation 5.9.7
Internal Bus Structure, Theory of Operation 5.9.5
Internal Peripherals, Theory of Operation 5.9.6
Memory, Theory of Operation 5.9.4
Overview of LRUs . . . . . Figure 6–13
PCI Card, Theory of Operation 5.9.8
Recovery Procedures 4.9.2
Replacement Procedure 6.5.41
Serial Ports, Theory of Operation 5.9.9
Setup Procedure 6.6.20
Software
Abnormal Processor System Reinitialization Procedure . . . . . Table 4–79
Addition of Groups . . . . . Table 4–82
Addition of Users . . . . . Table 4–83
Backup of RPG or MSCF User Account Directories Using tar . . . . . Table 4–62

Subject | Paragraph Figure, Table Number

MSCF – Continued
Processor – Continued
Software – Continued
Clean Out Printer Queues . . . . . Table 4–81
Date/Time Set Process . . . . . Table 4–77
Find and Clean Out Core Dumps . . . . . Table 4–80
Jaz Drive Disk Format and Mounting for Archive III (Alternate Method) . . . . Table 4–74
Jaz Drive Disk Format and Mounting for Archive III (Preferred Method) . . . . Table 4–73
Jaz Drive Disk Format and Mounting for Backup Purposes . . . . . Table 4–75
Load of New MSCF Applications Software . . . . . Table 4–56
MSCF Applications Software Backup . . . . . Table 4–60
MSCF Applications Software Restoral . . . . . Table 4–67
MSCF Dial Modem Setup . . . . . Table 4–72
MSCF Processor UD71A1 Full System Software Load . . . . . Table 4–54
Normal Processor System Reinitialization Procedure . . . . . Table 4–78
Restoral of RPG or MSCF User Account Directories Made Using tar . . . . . Table 4–68
Starting the MSCF Application . . . . . Table 4–46
Starting the RPG's HCI at MSCF . . . . . Table 4–47
Stopping the MSCF Application . . . . . Table 4–45
Stopping the RPG's HCI at MSCF . . . . . Table 4–44
System Software Backup Using ufsdump (Example) . . . . . Table 4–58
System Software Restoral Using ufsrestore (Example) . . . . . Table 4–65
Workstation Assembly 5.11.2.2

MSCF BDDS HCI Window 4.7.3.1.6
Figure 4–77

MSCF Color Printer, Description 1.2.4.1.4

MSCF Communications Status Window, HCI 4.7.3.1.2

MSCF Communications Status Window, Figur 4–75

MSCF Dedicated Modem (Codex 3263) 33600 Async, Setup Procedure 6.6.17

MSCF FAA Channels Area, HCI 4.7.3.1.1

MSCF Functional Block Diagram, Figur FO5–10

MSCF Group
Color Printer, Description 1.2.4.1.4
Components 1.2.4.1
Description 1.2.4
Distant MSCF 1.2.4.1.2
Purpose 1.1.5.2
Equipment 1.1.4

Subject | Paragraph Figure, Table Number

MSCF Group – Continued
1.1.5
Physical Dimensions . . . . . Table 1–5
Power Requirements . . . . . Table 1–7
Equipment Supplied 1.2.3
Local MSCF 1.2.4.1.3
Purpose 1.1.5.1
Reference Designations . . . . . Table 1–3
Shutdown Procedure . . . . . Table 4–35
Startup Procedure . . . . . Table 4–39
Terminal Suite, Description 1.2.4.1.1
Workstation Components . . . . . Figure 1–5

MSCF Main Window . . . . . Figure 4–74
MSCF BDDS HCI Window 4.7.3.1.6
Figure 4–77
MSCF Communications Status Window 4.7.3.1.2
Figure 4–75
MSCF FAA Channels Area 4.7.3.1.1
MSCF Power Control Window 4.7.3.1.3
Figure 4–76
MSCF RDA HCI 4.7.3.1.5
MSCF RPG HCI 4.7.3.1.4
Figure 4–1
Figure 4–2
Figure 4–40

MSCF Shutdown Procedure . . . . . Table 4–33
Table 4–38

MSCF System Interconnectivity . . . . . Figure FO7–2

MSCF Terminal Suite, Description 1.2.4.1.1

MSCF Windows 4.7.3
MSCF Main Window 4.7.3.1
Figure 4–74
MSCF BDDS HCI Window 4.7.3.1.6
Figure 4–77
MSCF Communications Status Window 4.7.3.1.2
Figure 4–75
MSCF FAA Channels Area 4.7.3.1.1
MSCF Power Control Window 4.7.3.1.3
Figure 4–76

Subject — Paragraph Figure, Table Number

MSCF Windows – Continued
MSCF RDA HCI 4.7.3.1.5
MSCF RPG HCI 4.7.3.1.4
Figure 4–1
Figure 4–2

MSCF Workstation, Frame Relay Hub Router (Cisco 2621XM) UD75 . . . . . 4.4.4.6

N

Narrowband, Configuration Tables 6.3.2.9

Narrowband Communications 4.5.3.1.1
Functional Block Diagram
FAA . . . . . Figure FO5–8
NWS and DOD . . . . . Figure FO5–7
ICD Tables 7.3
Interface Diagram . . . . . Figure FO7–1

Narrowband Data Flow, HCI 4.7.2.6.5

Narrowband Equipment, Description 1.2.2.1.12

Netscape 4.2.3.3.3

New Application Software Load Procedures
BDDS Processor . . . . . Table 4–57
MSCF Processor . . . . . Table 4–56
RPG Processor . . . . . Table 4–55

Non–Boot Terminal Keyboard Functions 4.2.4.2

NWS
Distant MSCF Communications 1.2.4.1.3
RPG Simplified Block Diagram . . . . . Figure FO5–1

NWS Redundant, Remote RDA Terminal . . . . . Figure FO7–7

NWS Redundant Systems 4.7.4.1
Switching Channels From Remote RDA Maintenance Terminal . . . . . Table 4–84

O

OBDiag
Diagnostic Tool 4.8.2.3.2
Execution . . . . . Table 4–90

Subject	Paragraph Figure, Table Number
Off–Line Diagnostic Tests	4.8
Introduction	4.8.1
POST Execution (min)	Table 4–88
Sun Ultra 5/10 Diagnostics	4.8.2
On–Line Status and Performance Monitoring	6.1.1.2
Open Boot PROM Diagnostics	4.8.2.3
OBDiag Diagnostic Tool	4.8.2.3.2
OBDiag Execution	Table 4–90
Stand–Alone Boot PROM Diagnostics	4.8.2.3.1
Operability Test	6.3.2.3
Operating System (OS)	
INIT Levels	4.3.1.2
Introduction	4.3.1
Prompts	4.3.1.5.1
Shells	4.3.1.5
Shutdown Procedure	Table 4–32
Use of Control Keys	4.3.1.5.2
User Accounts	4.3.1.3
User Modes	4.3.1.4
CDE Login	4.3.1.4.2
Command Line Login	4.3.1.4.1
Remote Login	4.3.1.4.3
Operational Computer Program Interfaces	1.3.2.5.2
Operations	4
Other Graphical Applications	4.2.3.3

P

Parameter Options, CDT–100	Table 6–7
Password, LOCA	4.2.3.2.8
Change Password Window	Figure 4–5
Password Change	4.2.3.2.8.1
Password Window	Figure 4–4
Password Protected Window, Lock Button, Password Window	Figure 4–73
Password Window	Figure 4–4
LOCA, Change Password Window	Figure 4–73
Phone Lines	5.6.3.4
Piped Commands	4.3.4.2

Subject	Paragraph Figure, Table Number
POST	4.8.2.2
POST Display Methods	4.8.2.2.1
POST Execution	4.8.2.2.2 Table 4–88
POST Keyboard Light Indications	Table 4–87
POST Termination	4.8.2.2.3
Power Administration	
Function	5.2.1.2
Functional Block Diagram	Figure FO5–4
Theory of Operation	5.3.4
Power Administrator UD70A10	5.3.4.2
UPS UD70A11	5.3.4.1
Power Administrator	5.11.4.3 5.11.5.3
Controls and Indicators	Table 4–14
Description	1.2.2.1.6
Purpose	1.1.3.7
Reboot Procedures	4.9.3.3
Replacement Procedure	6.5.20
Setup Procedure	6.6.8
Power Administrator UD70A10	5.3.4.2
Power Distribution	5.11
MSCF Group Assembly	5.11.2
Remote RDA Maintenance Terminal	5.11.3
RPGPCA Cabinet	
FAA	5.11.5
Power Administrator	5.11.5.3
Power Distribution Panel	5.11.5.1
Power Strip	5.11.5.5
RMS Power Administrator	5.11.5.4
UPS	5.11.5.2
NWS and DOD	5.11.4
AC Power Distribution Panel	5.11.4.1
Power Administrator	5.11.4.3
Power Strip	5.11.4.4
UPS	5.11.4.2
Power Distribution Panel	5.11.5.1
Power Filter, Replacement Procedure	6.5.39

Subject	Paragraph Figure, Table Number
Power Off/On Procedures	4.9.4
Using Power Administrator	
MSCF Power Control Window	4.9.4.1
Out–Of–Bandwidth Telnet	4.9.4.3
Telnet	4.9.4.2
Power Source, HCI	4.7.2.3.2
Power Strip	5.11.4.4 5.11.5.5
Power Supply/Fan Module Removal, Modem Rack	Figure 6–10
Power Turn–off, Replacement Procedures	6.5.2.3
PowerChute PLUS	4.2.3.3.4
Precip Cat, HCI	4.7.2.7.1
Preventive Maintenance, Procedures	6.1.2
PRF Selection, HCI	4.7.2.1.4
Primary Fault Isolation	
Fault Isolation Flowcharts	6.3.2
Flowchart Notes	6.3.2.6
Introduction	6.3.1
Operational Checks	6.1.3
Primary Fault Isolation Flowcharts	6.3.4
Principal User Connections	
DOD	Table 5–2
FAA	5.6.5 Table 5–3
NWS	Table 5–1
Printed Circuit Cards	6.5.1.1
Procedure	
RMS Power Administrator	6.6.19.3
RMS Power Administrator and Laptop Computer Setup	6.6.19.3.1
Processing, Function	5.2.1.3
Processors, Recovery Procedures	4.9.2
Fatal Condition	4.9.2.2
Non–Fatal Condition	4.9.2.1
Products	4.7.2.6.3
HCI	4.7.2.4.1.2
Product Distribution Communications Status Window	Figure 4–69
Products Button, RPG Product Distribution Control Window	Figure 4–70

Subject — Paragraph Figure, Table Number

Prompts, OS 4.3.1.5.1
PUP/RPGOP Status Window, HCI . . . . . Figure 4–71

Q

Quick Reference Chart 6.3.2.4

R

RDA Alarms Window, HCI . . . . . Figure 4–55
RDA Area
  Archive II Window . . . . . Figure 4–60
    Record Base Data Window . . . . . Figure 4–61
  Archive Base Data 4.7.2.3.3
  Archive Base Data Data Flow 4.7.2.3.5
  HCI Main Menu 4.7.2.3
  Power Source 4.7.2.3.2
  RDA Icon 4.7.2.3.1
    Alarms 4.7.2.3.1.2
      Figure 4–55
    Control 4.7.2.3.1.1
      Figure 4–57
      Moments 4.7.2.3.1.1.2
      Figure 4–59
      Reflectivity Calibration 4.7.2.3.1.1.1
      Figure 4–58
  Starting/Stopping Base Data Recording 4.7.2.3.4
RDA Calibration Check Performance Data Window, HCI . . . . . Figure 4–44
RDA Control, RDA Control/Status Window
  RDA Alarms Window . . . . . Figure 4–55
  VCP Control Window . . . . . Figure 4–56
RDA Control Button, RDA Control/Status Window . . . . . Figure 4–57
  Moments Window . . . . . Figure 4–59
  Reflectivity Calibration Window . . . . . Figure 4–58
RDA Icon 4.7.2.3.1
  Alarms 4.7.2.3.1.2
    Figure 4–55
  Control 4.7.2.3.1.1
    Moments 4.7.2.3.1.1.2
    Reflectivity Calibration 4.7.2.3.1.1.1

Subject | Paragraph Figure, Table Number

RDA Icon – Continued
RDA Control Button, RDA Control/Status Window . . . . . Figure 4–57
Moments Window . . . . . Figure 4–59
Reflectivity Calibration Window . . . . . Figure 4–58
RDA Control/Status Window, VCP Control Window . . . . . Figure 4–56

RDA Messages, HCI 4.7.2.7.7

RDA P/M Data 4.7.2.1.5
RDA Antenna/Pedestal Performance Data Window . . . . . Figure 4–42
RDA Calibration Check Performance Data Window . . . . . Figure 4–44
RDA Calibration Performance Data Window . . . . . Figure 4–43
RDA Device Status Performance Data Window . . . . . Figure 4–45
RDA Disk File Status Performance Data Window . . . . . Figure 4–46
RDA Performance Data Window . . . . . Figure 4–41
RDA Receiver/Signal Processor Performance Data Window . . . . . Figure 4–47
RDA Tower Utilities Performance Data Window . . . . . Figure 4–48
RDA Transmitter Performance Data Window . . . . . Figure 4–49
RDA Wideband Communications Performance Data Window . . . . . Figure 4–50

RDA/RPG Gateway 5.5.3.2
Controls and Indicators . . . . . Table 4–16
Power Off/On Procedures
MSCF Power Control Window 4.9.4.1
Out–Of–Bandwidth Telnet 4.9.4.3
Telnet 4.9.4.2
Replacement Procedure 6.5.24

RDA/RPG Interface Control/Status 4.7.2.5.3

RDA/RPG Interface Control/Status Window, HCI . . . . . Figure 4–67

Read from Archive 4.7.2.4.2.1

Reboot Procedures 4.9.3
Abnormal Reboot Procedure . . . . . Table 4–79
Communication Server 4.9.3.5
LAN Switch 4.9.3.1
Normal Reboot Procedure . . . . . Table 4–78
Power Administrator 4.9.3.3
RMS Power Administrator 4.9.3.4
Router 4.9.3.2

Record Base Data Window, HCI . . . . . Figure 4–61

Recovery Procedures 6.1.1.3
Processors 4.9.2
Fatal Condition 4.9.2.2
Non–Fatal Condition 4.9.2.1

Subject	Paragraph Figure, Table Number
Recovery/Emergency Procedures	4.9
Introduction	4.9.1
Redundant Systems	1.1.2.6
FAA	1.1.2.6.2
NWS	1.1.2.6.1
Reference Data	
Consumables/Expendables	1.4.6
Equipment Supplied	1.4.2
Glossary of Terms	1.4.1
Special Purpose Tools and Fixtures	1.4.5
Standard Test Equipment	1.4.4
Standard Tools	1.4.3
Reflectivity Calibration	4.7.2.3.1.1.1 Figure 4–58
Reinitialization Procedures	4.9.3
Communication Server	4.9.3.5
LAN Switch	4.9.3.1
Power Administrator	4.9.3.3
RMS Power Administrator	4.9.3.4
Router	4.9.3.2
Relay Box	Figure 6–3
Description	1.2.2.2.2
Power Supply, Replacement Procedure	6.5.40
Purpose	1.1.3.14
Relay Box Relays, Replacement Procedure	6.5.4
Relay Driver Circuits, Replacement Procedure	6.5.3
Relay Drivers Circuit Board Assemblies, Theory of Operation	5.7.4
Relay Function Map	Table 6–5
Relays K1 Through K60, Theory of Operation	5.7.3
Remote Login	4.3.1.4.3
Remote Maintenance Terminal, Controls and Indicators	Table 4–3 Figure 4–10
Remote Monitoring Subsystems	1.1.2.4

Subject	Paragraph Figure, Table Number
Remote RDA Maintenance Terminal	1.1.2.5
Components	Figure 1–4
Controls and Indicators	
Dial Port Modem (Stand Alone)	Figure 4–13
Dual A/B Switch	Figure 4–11
STATMUX	Figure 4–12
CPU, Replacement Procedure	6.5.5
Description	1.2.2.3
Equipment	4.4.2
Monitor UD32A10, Theory of Operation	5.10.2
Power Distribution	5.11.3
	Figure FO7–7
Shutdown Procedure	Table 4–36
Startup Procedure	Table 4–40
Replacement Procedure	
17 Inch Monitor	6.5.12
21 Inch Monitor	6.5.45
AC Power Distribution Panel	6.5.32
Archive Storage Device	6.5.19
Backup Storage Device	6.5.49
BDDS Processor	6.5.9
Color Printer	6.5.52
Color Printer Toner, Fuser Kit, Imaging Unit, Transfer Roll or Main Charge Grid	Table 6–4
Communication Server	6.5.28
CSU	6.5.29
Dedicated Adapter Panel	6.5.35
Dedicated Patch Panel	6.5.36
	6.5.37
Dedicated Port Modem (Rack–Mounted)	6.5.26
Dedicated Port Modem (Stand–alone), MSCF	6.5.48
Dedicated/Dial Modem Rack	6.5.27
Dial Adapter Panel	6.5.34
Dial Patch Panel	6.5.33
Dial Port Modem (Rack–Mounted)	6.5.26
Dial Port Modem (Stand–alone), Remote RDA	6.5.8
Dual A/B Switch	6.5.6
Keyboard	6.5.13
	6.5.46
KVM Switch	6.5.11

Subject | Paragraph Figure, Table Number

Replacement Procedure – Continued
LAN Switch 6.5.25
Mouse 6.5.14
6.5.47
Power Administrator 6.5.20
Power Filter 6.5.39
RDA/RPG Gateway 6.5.24
Relay Box Power Supply 6.5.40
Relay Box Relays 6.5.4
Relay Driver Circuit 6.5.3
Remote RDA Maintenance Terminal CPU 6.5.5
RMS Power Administrator 6.5.38
Router 6.5.10
RS–232/RS–422 Converter 6.5.31
Short Haul Modem 6.5.30
Special Considerations for Replacement Procedures 6.5.2
STATMUX 6.5.7
Surge Suppressor, MSCF 6.5.50
Ultra 10 Processor 6.5.15
CD–ROM Drive 6.5.17
Floppy Drive 6.5.16
Hard Disk 6.5.18
Ultra 5 Processor 6.5.41
CD–ROM Drive 6.5.43
Floppy Drive Replacement 6.5.42
Hard Disk 6.5.44
UPS 6.5.21
Battery Module 6.5.23
LAN Interface Module 6.5.22

Replacement Procedure and Setup Procedure, Introduction 6.5.1

Reset Power Procedures 4.9.4
Using Power Administrator
MSCF Power Control Window 4.9.4.1
Out–Of–Bandwidth Telnet 4.9.4.3
Telnet 4.9.4.2

Restoral of Software
MSCF Applications Software Restoral . . . . . Table 4–67
RPG Adaptation Data Restoral . . . . . Table 4–70
Table 4–71
RPG Applications Software Restoral . . . . . Table 4–66
System Software Restoral Using ufsrestore (Example) . . . . . Table 4–65

Subject | Paragraph Figure, Table Number

Restoral of User Accounts
Restoral of BDDS User Account Directories Made Using tar . . . . . Table 4–69
Restoral of MSCF User Account Directories Made Using tar . . . . . Table 4–68
Restoral of RPG User Account Directories Made Using tar . . . . . Table 4–68

Restoral of User Account Directories 4.6.5.4

RMS Power Administrator 5.11.5.4
Controls and Indicators . . . . . Table 4–25
Description 1.2.2.2.1
Purpose 1.1.3.13
Reboot Procedures 4.9.3.4
Replacement Procedure 6.5.38
Setup Procedure 6.6.19
Equipment and Tools Required 6.6.19.1
Initial Conditions/Preliminary Setup 6.6.19.2
Procedure 6.6.19.3
RMS Power Administrator and Laptop Computer Setup 6.6.19.3.1

Router
Description 1.2.2.1.2
Power Off/On Procedures
MSCF Power Control Window 4.9.4.1
Out–Of–Bandwidth Telnet 4.9.4.3
Telnet 4.9.4.2
Purpose 1.1.3.2
Reboot Procedures 4.9.3.2
Replacement Procedure 6.5.10
Setup Procedure 6.6.5

Router Assembly (Cisco 3640) Setup Procedure
Equipment and Tools Required 6.6.5.1
Intial Conditions/Preliminary Setup 6.6.5.2
Router Configuration Procedure 6.6.5.3

Router Configuration Procedure 6.6.5.3

Router, Controls and Indicators . . . . . Table 4–8

RPG
COTS Software, CPCI 12 . . . . . 1.3.3
DOD, Simplified Functional Flow Diagram 5.2.2.2
Equipment Description 1.2.2
FAA, Simplified Functional Flow Diagram 5.2.2.3
Fault Isolation Flowchart 6.3.2
Group, Software 1.3

Subject	Paragraph Figure, Table Number
RPG – Continued	
Major Functions	5.2.1
BDDS Processor	5.2.1.5
Communications	5.2.1.4
LAN	5.2.1.1
MSCF	5.2.1.6
Power Administration	5.2.1.2
Processing	5.2.1.3
NWS, Simplified Functional Flow Diagram	5.2.2.1
Simplified Block Diagram Description	5.2
Software Program (CPCI 03)	
Acquire Radar Data	1.3.2.1
Control System	1.3.2.4
Distribute Products	1.3.2.3
Generate Products	1.3.2.2
Software Program, CPCI 03	1.3.2
Support Software, CPCI 23	1.3.4
RPG Area	
Archive Products	4.7.2.4.2
Archive III Control/Status Window	Figure 4–66
Archive III Status	4.7.2.4.2.3
Archive One Product	4.7.2.4.2.5
Archive Products by Time Span	4.7.2.4.2.4
Auto Archive Control/Status	4.7.2.4.2.2
Read from Archive	4.7.2.4.2.1
Archive Products Data Flow	4.7.2.4.4
Archive Products Status Lines	4.7.2.4.3
HCI Main Menu	4.7.2.4
RPG Icon	4.7.2.4.1
Control Button	4.7.2.4.1.1
Control Button, RPG Control Window	Figure 4–62 Figure 4–63
Products Button	4.7.2.4.1.2
Products Button, RPG Products Window	Figure 4–64
Status Button	4.7.2.4.1.3
Status Button, RPG Status Window	Figure 4–65
RPG Control Button, RPG Control Window	Figure 4–62 Figure 4–63
RPG Control Window, HCI	Figure 4–62 Figure 4–63

Subject	Paragraph Figure, Table Number
RPG Control/Status Window	Figure 4–1
	Figure 4–2
RPG, Fault Isolation Flowchart	Figure 6–2
RPG Group	
Embedded Consoler Server (ECS)	1.1.2.7
Equipment	1.1.2
Functionality	1.1.2.1
Physical Dimensions	Table 1–4
Power Requirements	Table 1–6
Product Distribution Users	1.1.2.3
Narrowband Links	1.1.2.3.1
Network Connections	1.1.2.3.2
Redundant Systems	1.1.2.6
Remote Monitoring Subsystems	1.1.2.4
Remote RDA Maintenance Terminal	1.1.2.5
Wideband Communications Links	1.1.2.2
Equipment Supplied	1.2.1
MSCF Relationship	Figure 1–1
Reference Designations	Table 1–1
Shutdown Procedure	Table 4–34
Software, Description	1.3.1
Startup Procedure	Table 4–37
RPG HCI	4.2.3.2.1
RPG Icon	4.7.2.4.1
Control Button	4.7.2.4.1.1
Control Button, RPG Control Window	Figure 4–62
	Figure 4–63
Products Button	4.7.2.4.1.2
Products Button, RPG Products Window	Figure 4–64
Status Button	4.7.2.4.1.3
Status Button, RPG Status Window	Figure 4–65
RPG Narrowband Communications	
Dedicated Lines	5.6.4.4
	5.6.5.3
Dedicated Line Interface	5.6.4.4.1
	5.6.5.3.1
Dial Lines	5.6.4.3
	5.6.5.2
Dial Line Interfaces	5.6.4.3.1
	5.6.5.2.1

Subject | Paragraph Figure, Table Number

RPG Narrowband Communications – Continued
Modem Rack UD70/170A14 . . . . . 5.6.5.1
Modem Rack UD70A14 . . . . . 5.6.4.2
NWS and DOD 5.6.4
RS–232/RS–422 Converter 5.6.4.1
Telephone Demarcation 5.6.4.5

RPG, Narrowband Communications Interface . . . . . Table 1–2

RPG Processor
CD–ROM Drive Replacement 6.5.17
Controls and Indicators . . . . . Table 4–12
CPU, Theory of Operation 5.4.3
Description 1.2.2.1.4
Floppy Drive Replacement 6.5.16
Functional Block Diagram . . . . . Figure FO5–5
Hard Disk Replacement 6.5.18
I/O Connectors and External Interconnects, Theory of Operation 5.4.7
Internal Bus Structure, Theory of Operation 5.4.5
Internal Peripherals, Theory of Operation 5.4.6
KVM Switch, Theory of Operation 5.4.10
Memory, Theory of Operation 5.4.4
Overview of LRUs . . . . . Figure 6–6
PCI Cards, Theory of Operation 5.4.8
Power Off/On Procedures
MSCF Power Control Window 4.9.4.1
Out–Of–Bandwidth Telnet 4.9.4.3
Telnet 4.9.4.2
Purpose 1.1.3.5
Recovery Procedures 4.9.2
Replacement Procedures 6.5.15
RPG/RPG Interprocessor Link, Theory of Operation 5.4.11
Serial Ports, Theory of Operation 5.4.9
Setup Procedure 6.6.7
Software
Abnormal Processor System Reinitialization Procedure . . . . . Table 4–79
Addition of Group . . . . . Table 4–82
Addition of Users . . . . . Table 4–83
Backup of RPG or MSCF User Account Directories Using tar . . . . . Table 4–62
Date/Time Set Process . . . . . Table 4–77
Find and Clean Out Core Dumps . . . . . Table 4–80
Four/Eight Port Serial Card Driver Load . . . . . Table 4–76
Jaz Drive Disk Format and Mounting for Archive III (Alternate Method) . . . . . Table 4–74
Jaz Drive Disk Format and Mounting for Archive III (Preferred Method) . . . . . Table 4–73

Subject | Paragraph Figure, Table Number

RPG Processor – Continued
Software – Continued
Jaz Drive Disk Format and Mounting for Backup Purposes . . . . . Table 4–75
Load of New RPG Applications Software . . . . . Table 4–55
Normal Processor System Reinitialization Procedure . . . . . Table 4–78
Restoral of RPG or MSCF User Account Directories Made Using tar . . . . . Table 4–68
RPG Adaptation Data Backup . . . . . Table 4–63
Table 4–64
RPG Adaptation Data Restoral . . . . . Table 4–70
Table 4–71
RPG Applications Software Backup . . . . . Table 4–59
RPG Applications Software Restoral . . . . . Table 4–66
RPG Processor UD70A7 Full System Software Load . . . . . Table 4–52
Starting the PowerChute Display . . . . . Table 4–51
Starting the RPG Applications Software (Normal) . . . . . Table 4–42
Starting the RPG Applications Software With Clean Start Mode . . . . . Table 4–43
Stopping the PowerChute Display . . . . . Table 4–50
Stopping the RPG Applications Software . . . . . Table 4–41
System Software Backup Using ufsdump (Example) . . . . . Table 4–58
System Software Restoral Using ufsrestore (Example) . . . . . Table 4–65
Software, Four/Eight Port Serial Card Driver Load 4.6.6.3

RPG Product Distribution Control Window, HCI . . . . . Figure 4–70

RPG Products Button, RPG Products Window . . . . . Figure 4–64

RPG Products Window, HCI . . . . . Figure 4–64

RPG, Replacement Procedure Index . . . . . Table 6–6

RPG Shutdown and Startup Procedures 4.5
Introduction 4.5.1
Shutdown Procedures 4.5.2
MSCF Group Shutdown Procedure . . . . . Table 4–35
MSCF Shutdown Procedure . . . . . Table 4–33
Table 4–38
Operating System Shutdown Procedure . . . . . Table 4–32
Remote RDA Maintenance Terminal Shutdown Procedure . . . . . Table 4–36
RPG Group Shutdown Procedure . . . . . Table 4–34
Startup Procedures 4.5.3
MSCF Group Startup Procedure . . . . . Table 4–39
Remote RDA Maintenance Terminal Startup Procedure . . . . . Table 4–40
RPG Group Startup Procedure . . . . . Table 4–37
Special Notes for RPG/MSCF Group Startup 4.5.3.1
Narrowband Communications 4.5.3.1.1

Subject	Paragraph Figure, Table Number
RPG Simplified Block Diagram	
DOD	Figure FO5–2
FAA	Figure FO5–3
NWS	Figure FO5–1
RPG Status Window, HCI	Figure 4–65
RPG Support Software, CPCI 23	1.3.4
RPGPCA Cabinet	
FAA	
Power Administrator	5.11.5.3
Power Distribution	5.11.5
Power Distribution Panel	5.11.5.1
Power Strip	5.11.5.5
RMS Power Administrator	5.11.5.4
UPS	5.11.5.2
NWS and DOD	
AC Power Distribution Panel	5.11.4.1
Power Administrator	5.11.4.3
Power Distribution	5.11.4
Power Strip	5.11.4.4
UPS	5.11.4.2
RPGPCA Cabinet, Equipment Layout	
Front View	Figure 1–3
Rear View	Figure 1–3
RPGPCA Data Cables	
DOD	Figure FO7–4
FAA	Figure FO7–5
NWS	Figure FO7–3
RPGPCA Equipment	1.1.3 4.4.3
Archive Storage Device	
Description	1.2.2.1.5
Purpose	1.1.3.6
BDDS Processor	
Description	1.2.2.1.1
Purpose	1.1.3.1
Cabinet Components	1.2.2.1
Communication Server	
Description	1.2.2.1.10
Purpose	1.1.3.12

Subject | Paragraph Figure, Table Number

RPGPCA Equipment – Continued
Controls and Indicators
17 Inch Monitor . . . . . Figure 4–17
AC Power Distribution Panel . . . . . Figure 4–32
Archive Storage Device . . . . . Figure 4–20
BDDS Processor . . . . . Figure 4–14
Communication Server . . . . . Figure 4–28
Dedicated Port Modem (Rack Mounted) . . . . . Figure 4–27
Dial Port Modem (Rack Mounted) . . . . . Figure 4–27
Keyboard and Mouse . . . . . Figure 4–18
KVM Switch . . . . . Figure 4–16
LAN Switch . . . . . Figure 4–24
Modem Rack Assembly . . . . . Figure 4–25
21–Slot Backplane . . . . . Figure 4–26
Power Administrator . . . . . Figure 4–21
RDA/RPG Gateway . . . . . Figure 4–23
RMS Power Administrator . . . . . Figure 4–33
Router . . . . . Figure 4–15
RPG Processor . . . . . Figure 4–19
RS–232/RS–422 Converter . . . . . Figure 4–31
Short Haul Modem . . . . . Figure 4–30
UPS . . . . . Figure 4–22
CSU/DSU
Description 1.2.2.1.8
Purpose 1.1.3.9
Dedicated/Dial Modem Rack Assembly, Purpose 1.1.3.11
FAA Unique Equipment 1.2.2.2
KVM Switch
Description 1.2.2.1.3
Purpose 1.1.3.3
LAN Switch
Description 1.2.2.1.9
Purpose 1.1.3.10
Monitor, Keyboard, and Mouse, Purpose 1.1.3.4
Narrowband Equipment, Description 1.2.2.1.12
Power Administrator
Description 1.2.2.1.6
Purpose 1.1.3.7
Relay Box, Purpose 1.1.3.14
RMS Power Administrator
Description 1.2.2.2.1
Purpose 1.1.3.13

Subject — Paragraph Figure, Table Number

RPGPCA Equipment – Continued
Router
Description 1.2.2.1.2
Purpose 1.1.3.2
RPG Processor
Description 1.2.2.1.4
Purpose 1.1.3.5
UPS
Description 1.2.2.1.7
Purpose 1.1.3.8
Verilink 2100 CSU 1.2.2.1.11

RPGPCA Power Distribution
FAA . . . . . Figure FO7–9
NWS and DOD . . . . . Figure FO7–8

RS232/RS422 Converter 5.6.4.1
Card Shunt Settings . . . . . Figure 6–12
Controls and Indicators . . . . . Table 4–23
Replacement Procedure 6.5.31

Running Wire List . . . . . Table 7–1

S

Safety, Replacement Procedures 6.5.2.1

Secondary Fault Isolation 6.1.4
6.3.2.7
Introduction 6.4.1

Setup Procedure 6.6
BDDS Processor 6.6.4
Color Printer 6.6.23
Communication Server 6.6.18
Dedicated Port Modem (Stand–alone), MSCF 6.6.21
Dial–In Modem (Codex 3260) 14400/Async, Remote RDA 6.6.3
Introduction 6.6.1
KVM Switch 6.6.6
LAN Switch 6.6.10
LRU Setup Index . . . . . Table 6–9
MSCF Dedicated Modem (Codex 3263) 33600/Async 6.6.17
MSCF Processor 6.6.20
Power Administrator 6.6.8
RMS Power Administrator 6.6.19
Router 6.6.5

Subject	Paragraph Figure, Table Number
Setup Procedure – Continued	
RPG Processor	6.6.7
STATMUX	6.6.2
TCP OPUP Dedicated Modem (Codex 3263) PPP 14400/Async	6.6.16
TCP OPUP Dial–In Modem (Codex 3262) PPP 14400/Async	6.6.12
UPS	6.6.9
X.25 AWIPS Dedicated Modem (Codex 3263) 33600 SDC/Sync	6.6.13
X.25 Dedicated Modem (Codex 3263) 14400/Sync	6.6.14
X.25 Dial–In Modem (Codex 3262) 14400/Sync	6.6.11
X.25 ITWS Dedicated Modem (Codex 3263) 33600/Sync	6.6.15
Short Haul Modem	
Controls and Indicators	Table 4–22
Replacement Procedure	6.5.30
Shutdown Procedures	4.5.2
MSCF Group Shutdown Procedure	Table 4–35
MSCF Shutdown Procedure	Table 4–33 Table 4–38
Operating System Shutdown Procedure	Table 4–32
Remote RDA Maintenance Terminal Shutdown Procedure	Table 4–36
RPG Group Shutdown Procedure	Table 4–34
Stopping the BDDS Software	Table 4–48
Stopping the MSCF Application	Table 4–45
Stopping the PowerChute Display	Table 4–50
Stopping the RPG Applications Software	Table 4–41
Stopping the RPG's HCI at MSCF	Table 4–44
Simplified Block Diagram, RPG	
DOD	Figure FO5–2
FAA	Figure FO5–3
NWS	Figure FO5–1
Simplified Functional Flow Diagram	5.2.2
Software	
Description, RPG Group	1.3.1
Procedures	
Admintool Use	4.6.9
Addition of Groups	Table 4–82
Addition of Users	Table 4–83
Applications	
Starting the BDDS Software	4.6.2.6 Table 4–49
Starting the MSCF Application	Table 4–46
Starting the MSCF Client Software	4.6.2.4

Subject | Paragraph Figure, Table Number

Software – Continued
Procedures – Continued
Applications – Continued
Starting the PowerChute Display 4.6.2.8
Table 4–51
Starting the RPG Applications Software 4.6.2.2
Starting the RPG Applications Software (Normal) . . . . . Table 4–42
Starting the RPG Applications Software With Clean Start Mode . . . . . Table 4–43
Starting the RPG's HCI at MSCF . . . . . Table 4–47
Stopping the BDDS Software 4.6.2.5
Table 4–48
Stopping the MSCF Application . . . . . Table 4–45
Stopping the MSCF Client Software 4.6.2.3
Stopping the PowerChute Display 4.6.2.7
Table 4–50
Stopping the RPG Applications Software 4.6.2.1
Table 4–41
Stopping the RPG's HCI at MSCF . . . . . Table 4–44
Backups
Backup of BDDS User Accounts Directories Using tar . . . . . Table 4–61
Backup of MSCF User Account Directories Using tar . . . . . Table 4–62
Backup of RPG User Account Directories Using tar . . . . . Table 4–62
MSCF Applications Software Backup 4.6.4.4
Table 4–60
RPG Adaptation Data Backup 4.6.4.6
Table 4–63
Table 4–64
RPG Applications Software Backup 4.6.4.3
Table 4–59
System Software Backup Using ufsdump (Example) 4.6.4.2
Table 4–58
User Account Directories 4.6.4.5
Clean
Clean Out Printer Queues . . . . . Table 4–81
Find and Clean Out Core Dumps . . . . . Table 4–80
Full System Software Installations 4.6.3.1
BDDS Processor UD70A1 . . . . . 4.6.3.1.2
MSCF Processor UD71A1 . . . . . 4.6.3.1.3
RPG Processor UD70A7 . . . . . 4.6.3.1.1
Initialization
Abnormal Reinitialization Procedure . . . . . Table 4–79
Normal Reinitialization Procedure . . . . . Table 4–78

Subject | Paragraph Figure, Table Number

Software – Continued
Loads
BDDS Processor UD70A1 Full System Software Load . . . . . Table 4–53
Load of New BDDS Applications Software . . . . . Table 4–57
Load of New MSCF Applications Software . . . . . Table 4–56
Load of New RPG Applications Software . . . . . Table 4–55
MSCF Dial Modem Setup . . . . . Table 4–72
MSCF Processor UD71A1 Full System Software Load . . . . . Table 4–54
New BDDS Applications Software 4.6.3.4
New MSCF Applications Software 4.6.3.3
New RPG Applications Software 4.6.3.2
RPG Processor UD70A7 Full System Software Load . . . . . Table 4–52
Miscellaneous
Date/Time Set Process . . . . . Table 4–77
Four/Eight Port Serial Card Driver Load . . . . . Table 4–76
Jaz Drive Disk Format and Mounting for Archive III (Alternate Method) . . . . Table 4–74
Jaz Drive Disk Format and Mounting for Archive III (Preferred Method) . . . . Table 4–73
Jaz Drive Disk Format and Mounting for Backup Purposes . . . . . Table 4–75
Normal Reboot Procedure . . . . . Table 4–78
Miscellaneous, Load/Setup 4.6.6
Processor System Reinitialization 4.6.7
Reboot
Abnormal Reboot Procedure . . . . . Table 4–79
Restorals
MSCF Applications Software Restoral 4.6.5.3
Table 4–67
Restoral of BDDS User Account Directories Made Using tar . . . . . Table 4–69
Restoral of RPG User Account Directories Made Using tar . . . . . Table 4–68
RPG Adaptation Data Restoral, 4.6.5.5 . . . . . Table 4–70
Table 4–71
RPG Applications Software Restoral 4.6.5.2
Table 4–66
System Software Restoral Using ufsrestore 4.6.5.1
Table 4–65
User Account Directories 4.6.5.4
Software Backups 4.6.4
Types of Backups 4.6.4.1
Software Loads 4.6.3
Software Restorals 4.6.5
Stopping/Starting Applications Software 4.6.2
System Cleanup Actions 4.6.8

Subject	Paragraph Figure, Table Number
Software Program, CPCI 03	1.3.2
Interface Requirements	1.3.2.5
Software Shutdown, Replacement Procedures	6.5.2.2
Special Considerations for Replacement Procedures	6.5.2
Handling of ESDs	6.5.2.7
Inspection	6.5.2.5
Labeling	6.5.2.4
Power Turn–off	6.5.2.3
Safety	6.5.2.1
Software Shutdown	6.5.2.2
Special Function Characters, CDT–100	Table 6–8
Special Notes for RPG/MSCF Group Startup	4.5.3.1
Special Purpose Tools and Fixtures	1.4.5
Stand–Alone Boot PROM Diagnostics	Table 4–89
Stand–Alone Dedicated Modem, Replacement Procedure	6.5.48.3
Standard Test Equipment	1.4.4
Standard Tools	1.4.3
Start/Startup Procedures	
Starting the BDDS Software	Table 4–49
Starting the MSCF Application	Table 4–46
Starting the PowerChute Display	Table 4–51
Starting the RPG Applications Software (Normal)	Table 4–42
Starting the RPG Applications Software With Clean Start Mode	Table 4–43
Starting the RPG's HCI at MSCF	Table 4–47
Startup Procedures	4.5.3
MSCF Group Startup Procedure	Table 4–39
Narrowband Communications	4.5.3.1.1
Remote RDA Maintenance Terminal Startup Procedure	Table 4–40
RPG Group Startup Procedure	Table 4–37
Special Notes for RPG/MSCF Group Startup	4.5.3.1
STATMUX	
Controls and Indicators	Table 4–5
First Configuration Service Submenu	Figure 6–16
Global Parameters Form Menu	Figure 6–18
Level II Configuration Menu	Figure 6–17
Name Type Form Menu	Figure 6–20
Port Variables	Table 6–10

Subject | Paragraph Figure, Table Number

STATMUX – Continued
Replacement Procedure 6.5.7
Second Configuration Added to Form Menu . . . . . Figure 6–19
Set Terminal Characteristics Menu . . . . . Figure 6–15
Setup Procedure 6.6.2

STATMUX UD32A3, Theory of Operation 5.10.4

Status 4.7.2.6.4
HCI 4.7.2.4.1.3
RPG . . . . . Figure 4–65
Users . . . . . Figure 4–71

Status Areas
Adapt Times 4.7.2.7.8
Audio Alarms 4.7.2.7.6
Auto PRF 4.7.2.7.3
Calib Button 4.7.2.7.4
Calib Button, Reflectivity Calibration Window . . . . . Figure 4–58
HCI Main Menu 4.7.2.7
Load Shed 4.7.2.7.5
Load Shed, Load Shed Categories Window . . . . . Figure 4–72
Precip Cat 4.7.2.7.1
RDA Messages 4.7.2.7.7
VAD Update 4.7.2.7.2

Status Button, PUP/RPGOP Status Window . . . . . Figure 4–71

Stop Procedures
Stopping the BDDS Software . . . . . Table 4–48
Stopping the MSCF Application . . . . . Table 4–45
Stopping the PowerChute Display . . . . . Table 4–50
Stopping the RPG Applications Software . . . . . Table 4–41
Stopping the RPG's HCI at MSCF . . . . . Table 4–44

Strapping, Stand–Alone Dedicated Modem, Front Panel View and Internal . . . . . Figure 6–5

Sun Ultra 5/10
Diagnostics 4.8.2
Open Boot PROM Diagnostics 4.8.2.3
OBDiag Diagnostic Tool 4.8.2.3.2
OBDiag Execution . . . . . Table 4–90
Stand–Alone Boot PROM Diagnostics 4.8.2.3.1
POST 4.8.2.2
POST Display Methods 4.8.2.2.1
POST Execution 4.8.2.2.2
POST Execution (min) . . . . . Table 4–88

Subject — Paragraph Figure, Table Number

Sun Ultra 5/10 – Continued
POST – Continued
POST Keyboard Light Indications . . . . . Table 4–87
POST Termination 4.8.2.2.3
Recovery Procedures
Fatal Condition 4.9.2.2
Non–Fatal Condition 4.9.2.1

Surge Suppressor, Replacement Procedure, MSCF 6.5.50

Switching Redundant Channels 4.7.4
FAA Redundant Systems 4.7.4.2
From the Distant MSCF 4.7.4.2.1
Table 4–86
From the RPG Maintenance Terminal . . . . . Table 4–85
NWS Redundant Systems 4.7.4.1
From Remote RDA Maintenance Terminal . . . . . Table 4–84

Syntax Rules 4.3.4.1

System Cleanup Actions
Clean Out Printer Queues . . . . . Table 4–81
Find and Clean Out Core Dumps . . . . . Table 4–80

System Console Mode Operations 4.6

System Control Indicator 4.7.2.5.4

System Fault Isolation Flowchart 6.3.2.1
Figure 6–1

System Startup and Shut Down Procedures 6.1.10

System Status Line 4.7.2.2.2

T

TCP OPUP Dedicated Modem (Codex 3263) PPP 14400/Async, Setup Procedure 6.6.16

TCP OPUP Dial–In Modem (Codex 3262) PPP 14400/Async, Setup Procedure 6.6.12

Telephone Demarcation 5.6.4.5
5.7.5.1

Terminal Access Only 4.2.3.4

Terminal Setup Configuration Procedure, CDT –100 . . . . . 6.5.5.4

Subject	Paragraph Figure, Table Number
Theory of Operation	
Basic Modem Theory	5.6.3
BDDS Processor	
CPU	5.8.3
I/O Connectors and External Interconnects	5.8.7
Internal Bus Structure	5.8.5
Internal Peripherals	5.8.6
Memory	5.8.4
PCI Cards	5.8.8
Serial Ports	5.8.9
Communication Server Narrowband Processing	5.5.5
Communication Server UD70A15, A16, or A17	5.5.4
Ethernet Interface	5.5.4.1
Front/Rear Panel Indicators	5.5.4.5
Line Drivers/Serial Ports	5.5.4.4
Memory	5.5.4.3
Processors/Communication Controllers	5.5.4.2
Internal Busses	5.5.4.2.3
Slave QUICC	5.5.4.2.1
	5.5.4.2.2
Dial Port Modem UD32A4	5.10.5
Dual A/B Switch UD32A2	5.10.3
Feedback Control Relay K55	5.7.5
Introduction	5.1
LAN	5.3.3
LAN Switch UD70A13	5.3.3.1
MSCF Processor	
CPU	5.9.3
I/O Connectors and External Interconnects	5.9.7
Internal Bus Structure	5.9.5
Internal Peripherals	5.9.6
Memory	5.9.4
PCI Cards	5.9.8
Serial Ports	5.9.9
Power Administration	5.3.4
Power Administrator UD70A10	5.3.4.2
UPS UD70A11	5.3.4.1
Power Distribution	5.11
Principal User Connections, FAA	5.6.5
Relay Drivers Circuit Board Assemblies	5.7.4
Relays K1 Through K60	5.7.3
Remote RDA Maintenance Terminal Monitor UD32A10	5.10.2
Router UD70A2	5.3.3.2
DSU/CSU Module, UD70A2A1A1W0	5.3.3.2.1

Subject	Paragraph Figure, Table Number
Theory of Operation – Continued	
RPG Narrowband Communications, NWS and DOD	5.6.4
RPG Processor	
CPU	5.4.3
I/O Connectors and External Interconnects	5.4.7
Internal Bus Structure	5.4.5
Internal Peripherals	5.4.6
KVM Switch	5.4.10
Memory	5.4.4
PCI Cards	5.4.8
RPG/RPG Interprocessor Link	5.4.11
Channel Status and Control	5.4.11.2
Redundant Task Manager	5.4.11.1
Serial Ports	5.4.9
Simplified Block Diagrams Description, RPG	5.2
Simplified Functional Flow Diagram	
DOD RPG	5.2.2.2
FAA RPG	5.2.2.3
NWS RPG	5.2.2.1
STATMUX UD32A3	5.10.4
Wideband Link	5.5.3
CSU UD70A18	5.5.3.3
HDLC Format	5.5.3.1
RDA/RPG Gateway UD70A12	5.5.3.2
Tools, Test Equipment and Consumables	6.1.9
Tower/Radome Area	
Alarm Area	4.7.2.2.1
Alarm Area, RDA Alarms Window	Figure 4–55
Antenna Azimuth Position Display	4.7.2.2.6
HCI Main Menu	4.7.2.2
System Status Line	4.7.2.2.2
VCP Button	4.7.2.2.3
VCP Button, VCP Control Window	Figure 4–56
VCP Elevation Angle Display	4.7.2.2.5
Volume Status Line	4.7.2.2.4

Subject | Paragraph Figure, Table Number

U

Unique MSCF HCI Requirements 4.7
HCI Main Menu 4.7.2
Introduction 4.7.1
MSCF Windows 4.7.3
Switching Between Channels At The Distant MSCF (FAA Redundant Systems Only) . 4.7.4.2.1
Switching Between Redundant Channels 4.7.4

Unique MSCF HCI Requirements, MSCF Windows, MSCF Main Window . . . . . Figure 4–74
MSCF BDDS HCI Window . . . . . Figure 4–77
MSCF Communications Status Window . . . . . Figure 4–75
MSCF Power Control Window . . . . . Figure 4–76

Unique OS Requirements/Programs 4.6
Introduction 4.6.1

Universal Communication Devices 6.5.1.2

UNIX OS 4.3
Commands 4.3.4
4.3.4.3
! 4.3.4.3.1
alias 4.3.4.3.7
ca 4.3.4.3.13
cancel 4.3.4.3.10
cat 4.3.4.3.4
4.3.4.3.5
cd 4.3.4.3.2
chgrp 4.3.4.3.9
chmod 4.3.4.3.9
chown 4.3.4.3.9
compress 4.3.4.3.11
cp 4.3.4.3.6
crontab 4.3.4.3.14
cut 4.3.4.3.6
date 4.3.4.3.13
dd 4.3.4.3.6
df 4.3.4.3.8
diff 4.3.4.3.4
dmesg 4.3.4.3.8
du 4.3.4.3.8
echo 4.3.4.3.7
eject 4.3.4.3.11
env 4.3.4.3.7

Subject | Paragraph Figure, Table Number

UNIX OS – Continued
Commands – Continued
find 4.3.4.3.3
ftp 4.3.4.3.12
grep 4.3.4.3.3
gzip 4.3.4.3.11
halt 4.3.4.3.14
head 4.3.4.3.4
history 4.3.4.3.1
init 4.3.4.3.14
kill 3.4.3.14
lp 4.3.4.3.10
lpstat 4.3.4.3.10
ls 4.3.4.3.4
man 4.3.4.3.1
mkdir 4.3.4.3.5
more 4.3.4.3.4
mount 4.3.4.3.8
mountall 4.3.4.3.8
Multiple Commands 4.3.4.2
mv 4.3.4.3.6
passwd 4.3.4.3.13
pg 4.3.4.3.4
ping 4.3.4.3.12
Piped Commands 4.3.4.2
prtconf 4.3.4.3.8
ps 4.3.4.3.8
pwd 4.3.4.3.2
reboot 4.3.4.3.14
Redirection Symbols 4.3.4.3.5.1
script 4.3.4.3.4
sdiff 4.3.4.3.4
set 4.3.4.3.7
setenv 4.3.4.3.7
snoop 4.3.4.3.14
source 4.3.4.3.7
stty 4.3.4.3.7
su 4.3.4.3.14
sync 4.3.4.3.14
tail 4.3.4.3.4
tar 4.3.4.3.11
telnet 4.3.4.3.12
touch 4.3.4.3.5

Subject	Paragraph Figure, Table Number
UNIX OS – Continued	
Commands – Continued	
ufsdump	4.3.4.3.11
ufsrestore	4.3.4.3.11
uname	4.3.4.3.8
uncompress	4.3.4.3.11
vi	4.3.5
which	4.3.4.3.1
who	4.3.4.3.8 4.3.4.3.13
whoami	4.3.4.3.13
File System	4.3.3
Absolute and Relative Paths	4.3.3.4
Current and Parent Directory	4.3.3.2
Directory Structure	4.3.3.1
File Locations and Wildcards	4.3.3.5
File Naming Conventions	4.3.3.3
General Syntax Rules	4.3.4.1
Initialization	4.3.1.1
Utilities/Programs	4.3.2
Command Line–Based Support	4.3.2.2
Graphical Based Support	4.3.2.1
UPS	5.3.4.1 5.11.4.2 5.11.5.2
Battery Module Replacement	6.5.23
Description	1.2.2.1.7
LAN Interface Module Replacement	6.5.22
Purpose	1.1.3.8
Replacement Procedure	6.5.21
Setup Procedure	6.6.9
UPS, Controls and Indicators	Table 4–15
Use of Commercial Manuals	6.1.8
Use of Control Keys, OS	4.3.1.5.2
User Accounts, Operating System (OS)	4.3.1.3
Users Area	
Comms Button	4.7.2.6.2
HCI Main Menu	4.7.2.6
Narrowband Data Flow	4.7.2.6.5

Subject	Paragraph Figure, Table Number
Users Area – Continued	
Products Button	4.7.2.6.3
Status Button	4.7.2.6.4
Users Icon	4.7.2.6.1
Users Icon	4.7.2.6.1
Comms Button, Product Distribution Communications Status Window	Figure 4–69
Products Button, RPG Product Distribution Control Window	Figure 4–70
Status Button, PUP/RPGOP Status Window	Figure 4–71
Utilities/Programs	
Command Line–Based Support	4.3.2.2
Help Utilities	4.3.2.2.1
Graphical Based Support	4.3.2.1
CDE Control Panel	4.2.3.1.5 4.3.2.1.1
CDE Workspace Menu	4.3.2.1.2 Figure 4–8
Help Utilities	4.3.2.1.3

V

VAD Update	4.7.2.7.2
VCP Button	4.7.2.2.3
VCP Control Window	Figure 4–56
VCP Elevation Angle Display	4.7.2.2.5
Verilink 2100 CSU	1.2.2.1.11
Visual Inspection, Replacement Procedures	6.5.2.5
Volume Status Line	4.7.2.2.4

W

Warning_popup Window	Figure 4–3
Warning_popups	4.2.3.2.7
WBC Group	Figure 1–2
Wideband Area	
HCI Main Menu	4.7.2.5
MLOS Button	4.7.2.5.5
MLOS Button, MLOS Status Window	Figure 4–68
RDA/RPG Interface Control/Status	4.7.2.5.3

Subject — Paragraph Figure, Table Number

Wideband Area – Continued
System Control Indicator 4.7.2.5.4
Wideband Link Data Flow 4.7.2.5.1
Wideband Status 4.7.2.5.2

Wideband Link
Communications 1.1.2.2
CSU UD70A18, Theory of Operation 5.5.3.3
RDA/RPG Gateway UD70A12, Theory of Operation 5.5.3.2
Theory of Operation 5.5.3

Wideband Link Data Flow 4.7.2.5.1

Wideband Status 4.7.2.5.2

Windows
CDE 4.2.3.1.1
Graphical RPG Applications Software 4.2.3.2.2

Workspace 4.2.3.1.2

Workspace Menu 4.2.3.2.10
Figure 4–8

X

X.25 AWIPS Dedicated Modem (Codex 3263) 33600 SDC/Sync, Setup Procedure 6.6.13

X.25 Dedicated Modem (Codex 3263) 14400 Sync, Setup Procedure 6.6.14

X.25 Dial–In Modem (Codex 3262) 14400/Sync, Setup Procedure 6.6.11

X.25 ITWS Dedicated Modem (Codex 3263) 33600 Sync, Setup Procedure 6.6.15

Numbers

17 Inch Monitor, RPG, Replacement Procedure 6.5.12

17 Inch Monitor, Controls and Indicators . . . . . Table 4–10

21 Inch Monitor, MSCF, Replacement Procedure 6.5.45

21 Inch Monitor, Controls and Indicators . . . . . Table 4–27

GLOSSARY

Acronym or Non–Standard Term	Definition
A	
AC	Alternating Current
ACL	Access Control List
ACU	Auto Call Unit
APB	Advanced Peripheral Component Interconnect Bridge
APC	American Power Conversion
AU	Arithmetic Unit
AWIPS	Advanced Weather Interactive Processing System
B	
BCAST	Broadcast (a TCP/IP broadcast tool)
BDDS	Base Data Distribution Server
BIT	Built–In Test
bps	Bits Per Second
BRECV	Broadcast Receive (receipt of BCAST data)
C	
CCITT	International Telegraph and Telephone Consultative Committee
CD	Contiguous Doppler, Carrier Detect
CD–ROM	Compact Disc – Read Only Memory
CDE	Common Desktop Environment
CDS	Control Diagnostic System
CIC	Connect Incoming Call
COTS	Commercial Off The Shelf
CPCI	Computer Program Configuration Item

GLOSSARY (Cont.)

Acronym or Non–Standard Term	Definition
CPU	Central Processing Unit
CRN	Call Requested Number
CRT	Cathode Ray Tube
CSS	Command Substitution System
CSU	Channel Service Unit
CSU/DSU	Channel Service Unit/Data Service Unit
CTS	Clear To Send
CUA	Common User Access

D

DCD	Data Carrier Detect
DCE	Data Communications Equipment
DEL	Delete
DIMM	Dual In–Line Memory
DIO	Digital Input/Output
Distant MSCF	Distant Master System Control Function Workstation. A DoD or FAA MSCF. The RPG in in the RDA shelter while the Distant MSCF is with the primary PUP.
DMA	Direct Memory Access
DoD	Department of Defense
DRAM	Dynamic Random Access Memory
DSR	Data Set Ready
DSU	Data Service Unit
DTE	Data Terminal Equipment

GLOSSARY (Cont.)

Acronym or Non–Standard Term	Definition
	E
ECC	Error Check and Correction
ECS	Embedded Console Server
EDO	Extended Data Out
EHB	Engineering Handbook
EIA	Electronic Industries Association
EIDE	Enhanced Integrated Drive Electronics
Endian	Refers to which bytes are most significant in multi–byte data types. In big–endian architectures, the leftmost bytes (those with a lower address) are most significant. In little–endian architectures, the right most bytes are most significant.
EOF	End of File
EOT	End of Task
EPSS	Electronic Performance Support System
ESD	Electrostatic Discharge
	F
FAA	Federal Aviation Administration
FEC	Fast Ethernet Controller
FR	Frame Relay
FSP	Full Scale Production
	G
GB	Gigabyte
GMT	Greenwich Mean Time. Same as UTC.
GND	Ground

GLOSSARY (Cont.)

Acronym or Non–Standard Term	Definition
GUI	Graphical User Interface
	H
Halfword	A non–broken sequence of BITs or characters that make up half a computer word and that can be addresses as a unit.
HCI	Human Computer Interface
HDLC	High–Level Data Link Control
Hex	Hexadecimal
HSP	Hardwired Signal Processor
HSS	High Speed Serial
Hydrometeorological	Elements (such as temperature, pressure, humidity, wind, rainfall, and cloudiness) which determine the state of the weather.
	I
IAW	In Accordance With
ICD	Interconnection Cabling Diagram
ICP	Intelligent Communication Processor
IDE	Integrated Drive Electronics
IEEE	Institute of Electrical and Electronics Engineers
I/O or IO	Input/Output
IP	Internet Protocol
IPB	Illustrated Parts Breakdown
ISA	Industry Standard Architecture

GLOSSARY (Cont.)

Acronym or Non–Standard Term	Definition
	J
	K
KB	Kilobytes
Kbaud	Kilobaud
KBD	Keyboard
Kbits	Kilobits
KVM	Keyboard / Video / Mouse
	L
LAL	Local Analog Loopback
LAN	Local Area Network
LCD	Liquid Crystal Display
LED	Light Emitting Diode
LOC	Local
LOCA	Level Of Change Authority
Local MSCF	Local Master System Control Function Workstation. A NWS MSCF located in the same building as the RPG.
LPP	Limited Production Phase
LRU	Line Replaceable Unit
	M
MAC	Media Access Controller
MB	Megabytes
Mbps	Megabits Per Second
MCU	Memory Control Unit

GLOSSARY (Cont.)

Acronym or Non–Standard Term	Definition
MHz	Megahertz
MLOS	Microwave Line of Sight
MODEM	MOdulate/DEModulate
MPS	Multi–Protocol Server
MSCF	Master System Control Function Workstation or the Master System Control Functions software display menu.
MUX	Multiplexer
N	
NB	Narrowband
NEXRAD	Next Generation Weather Radar
NIC	Network Interface Card
NIDS	NEXRAD Information Dissemination Service
NRC	National Reconditioning Center
ns	Nano–Seconds
NVRAM	Non–Volatile Random Access Memory
NWS	National Weather Service
O	
OPUP	Open Systems Principal User Processor
OS	Operating System
OSF	Operational Support Facility (renamed Radar Operations Center)
P	
PCI	Peripheral Component Interconnect
PED	Pedestal

GLOSSARY (Cont.)

Acronym or Non–Standard Term	Definition
PIC	Precision Interval Clock
PID	Process Identification
POST	Power On Self Test
PPID	Parent Process Identification
PPP	Point–to–Point Protocol
PRF	Pulse Repetition Frequency
PROM	Programmable Read Only Memory
PSP	Programmable Signal Processor
PST	Process Segment Table
PSTN	Public Switched Telephone Network
PTI	Performance Technologies Incorporated
PUES	Principal User External System
PUP	Principal User Processor
Q	
QAM	Quadrature Amplitude Modulation
QUICC	Quad Integrated Communications Controller
R	
RAM	Random Access Memory
RD	Receive Data
RDA	Radar Data Acquisition
RDASC	Radar Data Acquisition Status and Control
RDASOT	Radar Data Acquisition System Operational Test
RDL	Remote Digital Loopback
RDY	Ready

GLOSSARY (Cont.)

Acronym or Non−Standard Term	Definition
RFC	River Forecast Center
RGDAC	Rain Gauge Data Acquisition Computer
RISC	Reduced Instruction Set Computer
RMS	Remote Monitoring Subsystem (FAA)
ROC	Radar Operations Center (formerly named OSF)
RPC	Remote Power Control
RPG	Radar Product Generation
RPGPCA	Radar Product Generation Processor/Communications Assembly
RPS	Redundant Power Source
RRRAT	Radar Data Acquisition / Radar Product Generation Remote Access Terminal
RSSD	Remote Support Services Daemon
RTS	Request To Send
RX	Receive
RXC	Receive Clock
RXD	Receive Data

S

SCC	Serial Communications Controller
SCSI	Small Computer System Interface
SELCH	Select Channel
SERD	Support Equipment Requirements Document
SGRAM	Synchronous Graphics Random Access Memory
SHM	Short Haul Modem
SIMM	Single In−line Memory Module

GLOSSARY (Cont.)

Acronym or Non–Standard Term	Definition
SNMP	Simple Network Management Protocol
SOPS	Swing–Out Power Supply
SRA	Site Replaceable Assembly
SRAM	Static Random Access Memory
SSRAM	Synchronous Static Random Access Memory
ST	Start
STATMUX	Statistical Multiplexer
STP	Spanning Tree Protocol
SVC	Switched Virtual Circuit

T

TCP	Transmission Control Protocol
TD	Transmitter Data
TELCO	Telephone Company
TOD	Time of Day
TPE	Twisted–Pair Ethernet
TTY	Terminal Identifier
TX	Transmit
TXC	Transmit Clock
TXD	Transmit Data

U

UD	Unit Designation
ufs	Unix File System
UID	User ID

GLOSSARY (Cont.)

Acronym or Non–Standard Term	Definition
UPA	Universal Port Adapter
UPS	Uninterruptible Power Supply
URL	Universal Resource Locator
UTC	Coordinated Universal Time. Same as GMT.

V

VCP	Volume Coverage Pattern
VLAN	Virtual Local Area Network
VME	Versa Module Eurocard
VNC	Virtual Network Console

W

WAN	Wide Area Network
WARP	Weather and Radar Processor
WBC	Wideband Communication
WSFO	Weather Service Forecast Office
WSR	Weather Surveillance Radar

X

Y

Z