NWS EHB 6−550
AF TO 31P1−4−108−101
FAA TI 6345.1 V20

CHANGE NO. 1, 15 SEPTEMBER 2003

HEADQUARTERS
DEPARTMENT OF COMMERCE
DEPARTMENT OF DEFENSE
DEPARTMENT OF TRANSPORTATION

TECHNICAL MANUAL

MAINTENANCE INSTRUCTIONS

REAL PROPERTY INSTALLED EQUIPMENT (RPIE) GROUP

DOPPLER METEOROLOGICAL RADAR WSR−88D

CONTRACT 50−DMNW−8−00032

NWS EHB 6−550 (AF TO 31P1−4−108−101, FAA TI 6345.1 V20 dated 01 July 2003, is changed as follows:

1. Change 1 consists of general updates.
2. Remove old pages and insert new pages as indicated below.
3. New or changed text is indicated by a vertical line in the margin of the pages.
4. Changes to illustrations are indicated by a miniature pointing hand.

Remove Pages	**Insert Pages**
Cover Page	Cover Page
Title Page and A	Title Page and A
	B/(C blank)
iii thru vi	iii thru vi
xxiii and xxiv	xxiii and xxiv
1−23 thru 1−26	1−23 thru 1−26
1−37 and 1−38	1−37 and 1−38
	FP−1−25/(FP1−26 blank)
3−77 and 3−78	3−77 and 3−78
3−221 and 3−222	3−221 and 3−222
3−225 and 3−226	3−225 and 3−226
Index 19 thru Index 66	Index 19 thru Index 29/(Index 30 blank)

File this change sheet in front of the publication for reference purposes.

NWS EHB 6−550
AF TO 31P1−4−108−101
FAA TI 6345.1 V20

REVISION NO. 3

TECHNICAL MANUAL

MAINTENANCE INSTRUCTIONS
REAL PROPERTY INSTALLED EQUIPMENT (RPIE) GROUP

DOPPLER METEOROLOGICAL RADAR
WSR−88D

PARAMAX CORPORATION
CONTRACT 50−DMNW−8−00032

Distribution Statement A − Approved for public release; distribution is unlimited.

PUBLISHED UNDER AUTHORITY OF THE SECRETARIES OF
COMMERCE, THE AIR FORCE, THE NAVY, AND TRANSPORTATION

01 JULY 2003
CHANGE 1 15 SEPTEMBER 2003

LIST OF EFFECTIVE PAGES

INSERT LATEST CHANGED PAGES, DESTROY SUPERCEDED PAGES.

NOTE: The portion of the text affected by the changes is indicated by a vertical line in the outer margins of the page. Minor changes to illustrations are indicated by a miniature pointing hand. Extensive illustration changes and new illustrations do not have the miniature pointing hands.

Dates of issue for original and changed pages are:

Original . . . . . 0 . . . . . 01 July 2003
Change . . . . . 1 . . . . . 15 September 2003

TOTAL NUMBER OF PAGES IN THIS MANUAL IS 574 CONSISTING OF THE FOLLOWING:

Page No.	*Change No.
Title Page	**1**
A − B	**1**
C blank	**1**
i − iii	0
iv − v	**1**
vi − xxii	0
xxiii − xxiv	**1**
xxv − xxix	0
xxx blank	0
1−1 − 1−23	0
1−24 − 1−25	**1**
1−26 − 1−37	0
1−38	**1**
1−39 − 1−76	0
FP−1−1	0
FP−1−2 blank	0
FP−1−3	0
FP−1−4 blank	0
FP−1−5	0
FP−1−6 blank	0
FP−1−7	0
FP−1−8 blank	0
FP−1−9	0
FP−1−10 blank	0
FP−1−11	0
FP−1−12 blank	0
FP−1−13	0
FP−1−14 blank	0
FP−1−15	0
FP−1−16 blank	0
FP−1−17	0
FP−1−18 blank	0
FP−1−19	0
FP−1−20 blank	0
FP−1−21	0
FP−1−22 blank	0
FP−1−23	0
FP−1−24 blank	0
FP−1−25	**1**
FP−1−26 blank	**1**
FP−1−27	0
FP−1−28 blank	0
FP−1−29	0
FP−1−30 blank	0
FP−1−31	0
FP−1−32 blank	0
FP−1−33	0
FP−1−34 blank	0
FP−1−35	0
FP−1−36 blank	0
2−1 − 2−44	0
3−1 − 3−76	0
3−77	**1**
3−78 − 3−221	0
3−222	**1**
3−223 − 3−224	0
3−225 − 3−226	**1**
3−227 − 3−265	0
3−266 blank	0
4−1 − 4−15	0
4−16 blank	0
FP−4−1	0
FP−4−2 blank	0
FP−4−3	0
FP−4−4 blank	0
FP−4−5	0
FP−4−6 blank	0
FP−4−7	0
FP−4−8 blank	0
FP−4−9	0
FP−4−10 blank	0
FP−4−11	0
FP−4−12 blank	0
FP−4−13	0
FP−4−14 blank	0
FP−4−15	0
FP−4−16 blank	0
FP−4−17	0
FP−4−18 blank	0
FP−4−19	0
FP−4−20 blank	0
FP−4−21	0
FP−4−22 blank	0
FP−4−23	0
FP−4−24 blank	0
FP−4−25	0
FP−4−26 blank	0
FP−4−27	0
FP−4−28 blank	0
FP−4−29	0
FP−4−30 blank	0
FP−4−31	0
FP−4−32 blank	0
FP−4−33	0
FP−4−34 blank	0
FP−4−35	0
FP−4−36 blank	0
FP−4−37	0
FP−4−38 blank	0
FP−4−39	0
FP−4−40 blank	0
FP−4−41	0
FP−4−42 blank	0
FP−4−43	0
FP−4−44 blank	0
FP−4−45	0

* Zero in this column indicates an original page.

LIST OF EFFECTIVE PAGES

INSERT LATEST CHANGED PAGES, DESTROY SUPERCEDED PAGES.

NOTE: The portion of the text affected by the changes is indicated by a vertical line in the outer margins of the page. Minor changes to illustrations are indicated by a miniature pointing hand. Extensive illustration changes and new illustrations do not have the miniature pointing hands.

Page No.	*Change No.	Page No.	*Change No.	Page No.	*Change No.
FP−4−46 blank	0	FP−4−50 blank	0	**Index 30 blank**	**1**
FP−4−47	0	A−1 − A−16	0	Glossary 1−Glossary 3	0
FP−4−48 blank	0	Index 1 − Index 19	0	Glossary 4 blank	0
FP−4−49	0	**Index 20 − Index 29**	**1**		

* Zero in this column indicates an original page.

TABLE OF CONTENTS

Number	Title	Page
LIST OF ILLUSTRATIONS		xv
LIST OF TABLES		xviii
FOREWORD		xx
SAFETY SUMMARY		xxi
CHAPTER 1	**REAL PROPERTY INSTALLED EQUIPMENT (RPIE) SYSTEM DESCRIPTION**	**1−1**
SECTION 1−1.	INTRODUCTION	1−1
1−1.1	GENERAL DESCRIPTION	1−1
1−1.2	POWER GENERATION AND DISTRIBUTION SUBSYSTEM	1−1
1−1.3	HEATING, VENTILATION, AND AIR CONDITIONING (HVAC) SUBSYSTEM	1−2
1−1.4	FIRE DETECTION SUBSYSTEM	1−4
1−1.5	SECURITY AND AUXILIARY SUBSYSTEM	1−4
1−1.6	RADOME, TOWERS, AND SHELTER SUPPORT SUBSYSTEM	1−5
SECTION 1−2.	EQUIPMENT DESCRIPTION	1−50
1−2.1	RPIE TOOLS, EQUIPMENT, AND TEST EQUIPMENT.	1−50
SECTION 1−3.	SYSTEM DESCRIPTION	1−51
1−3.1	RPIE FUNCTIONAL SYSTEM DESCRIPTION	1−51
1−3.2	AC POWER GENERATION AND DISTRIBUTION FUNCTION	1−51
1−3.2.1	Generator Shelter Vac Distribution	1−51
1−3.2.2	RDA Equipment Shelter Power Distribution	1−52
1−3.2.2.1	Main Power Distribution Panel UD7A2	1−52
1−3.2.2.2	Secondary Power Distribution Panel UD7A3	1−53
1−3.2.3	MLOS Shelter Power Distribution	1−55
1−3.2.4	Transition Power Maintenance Shelter (TPMS) Power Distribution	1−55
1−3.2.4.1	TPS Electrical Power Distribution	1−56
1−3.3	HEATING, VENTING, AND AIR CONDITIONING (HVAC) FUNCTIONAL DESCRIPTION	1−56
1−3.3.1	Heating	1−56
1−3.3.2	Ventilation	1−57
1−3.3.3	RDA Equipment Shelter Air Conditioning	1−58
1−3.3.4	RDA Equipment Shelter Air Conditioning without Economizer	1−59
1−3.3.5	RDA Equipment Shelter Air Conditioning with Economizer	1−59
1−3.3.6	TPMS Environmental Control System	1−60

Number	Title	Page
1−3.4	FIRE DETECTION SUBSYSTEM	1−61
1−3.4.1	Generator Shelter Fire Detection	1−61
1−3.4.2	RDA Equipment Shelter Fire Detection	1−62
1−3.4.3	MLOS Shelter Fire Detection	1−63
1−3.5	SECURITY AND AUXILIARY SUBSYSTEM FUNCTION	1−63
1−3.5.1	Security Subsystem	1−63
1−3.5.2	Auxiliary Subsystem	1−64
1−3.6	RADOME, TOWER, AND SHELTER SUPPORT SUBSYSTEM FUNCTIONS	1−65
1−3.6.1	Radome	1−65
1−3.6.2	Radar and MLOS Towers	1−66
1−3.6.3	Shelters	1−66
CHAPTER 2	**RPIE OPERATING INSTRUCTIONS**	**2−1**
SECTION 2−1.	GENERAL DESCRIPTION	2−1
SECTION 2−2.	OPERATIONAL INSTRUCTIONS	2−2
SECTION 2−3.	EMERGENCY PROCEDURES	2−3
SECTION 2−4.	CONTROLS AND INDICATORS	2−4
CHAPTER 3	**SYSTEM MAINTENANCE**	**3−1**
SECTION 3−1.	GENERAL DESCRIPTION	3−1
3−1.1	GENERAL	3−1
SECTION 3−2.	CHECKOUT PROCEDURES	3−2
3−2.1	INTRODUCTION	3−2
3−2.2	AIR CONDITIONER WITHOUT ECONOMIZER CONTROL CIRCUITRY OPERATIONAL CHECK	3−4
3−2.3	AIR CONDITIONER WITH ECONOMIZER CONTROL CIRCUITRY OPERATIONAL CHECK	3−5
3−2.4	TRANSMITTER VENTING CONTROL CIRCUITRY OPERATIONAL CHECK	3−9
3−2.5	GENERATOR SHELTER VENTING CONTROL CIRCUITRY OPERATIONAL CHECK	3−11
3−2.6	GENERATOR VENTING CONTROL CIRCUITRY OPERATIONAL CHECK	3−12
3−2.7	GENERATOR SHELTER HEATING CONTROL CIRCUITRY OPERATIONAL CHECK	3−14
3−2.8	RADOME VENTING CONTROL CIRCUITRY OPERATIONAL CHECK	3−15
3−2.9	RDA SHELTER FIRE DETECTION SUBSYSTEM CONTROL CIRCUITRY OPERATIONAL CHECK	3−17
3−2.10	GENERATOR SHELTER THERMAL DETECTOR OPERATIONAL CHECK	3−20

Number	Title	Page
3−2.11	SECURITY ALARM PANEL CONTROL CIRCUITRY OPERATIONAL CHECK	3−21
3−2.12	AIR CONDITIONER EXHAUST AIR TEMPERATURE SENSOR OPERATIONAL CHECK	3−24
3−2.13	TRANSMITTER VENT EXHAUST AIR TEMPERATURE SENSOR CIRCUITRY OPERATIONAL CHECK	3−27
3−2.14	CLOGGED FILTER INDICATOR CIRCUITRY OPERATIONAL CHECK	3−29
3−2.15	EXTERIOR AIR TEMPERATURE SENSOR CIRCUITRY OPERATIONAL CHECK	3−30
3−2.16	INTERIOR AIR TEMPERATURE SENSOR CIRCUITRY OPERATIONAL CHECK	3−32
3−2.17	GENERATOR SHELTER AIR TEMPERATURE SENSOR CIRCUITRY OPERATIONAL CHECK	3−34
3−2.18	RADOME AIR TEMPERATURE SENSOR CIRCUITRY OPERATIONAL CHECK	3−36
3−2.19	AIRCRAFT WARNING LIGHT CONTROL CIRCUITRY OPERATIONAL CHECK	3−38
3−2.20	TPMS ENVIRONMENTAL CONTROL UNIT OPERATIONAL CHECK	3−39
3−2.21	TPMS ELECTRIC TOILET OPERATIONAL CHECK	3−42
3−2.22	TPS UNIT OPERATIONAL CHECK	3−43
3−2.23	HYDROGEN DETECTOR OPERATIONAL CHECK	3−45
SECTION 3−3.	TROUBLESHOOTING PROCEDURES	3−47
3−3.1	INTRODUCTION	3−47
3−3.2	RPIE FAULT ISOLATION	3−47
3−3.2.1	Primary Fault Isolation Flowcharts	3−47
3−3.2.2	Flowchart Symbol Convention	3−47
3−3.2.3	Secondary Fault Isolation Procedures	3−47
3−3.2.3.1	Equipment and Tools Required	3−47
3−3.2.3.2	TU1	3−47
3−3.2.3.3	TU2	3−48
3−3.2.3.4	TU3	3−50
3−3.2.3.5	TU4	3−50
3−3.3	RPIE FAULT MAINTENANCE PROCEDURE	3−60
3−3.3.1	Air Conditioner Control Circuitry Troubleshooting	3−60
3−3.3.1.1	Equipment and Tools Required	3−60
3−3.3.1.2	Initial Conditions/Preliminary Setup	3−60
3−3.3.1.3	Troubleshooting Procedure	3−60
3−3.3.2	Radome Venting Circuitry Troubleshooting	3−63
3−3.3.2.1	Equipment and Tools Required	3−63
3−3.3.2.2	Initial Conditions/Preliminary Setup	3−64
3−3.3.2.3	Troubleshooting Procedure	3−65

Number	Title	Page
3−3.3.3	RDA Equipment Shelter Transmitter Vent Cooling Circuitry Troubleshooting	3−67
3−3.3.3.1	Equipment and Tools Required	3−67
3−3.3.3.2	Initial Conditions/Preliminary Setup	3−67
3−3.3.3.3	Troubleshooting Procedure	3−68
3−3.3.4	Generator Ventilation Circuitry Troubleshooting	3−69
3−3.3.4.1	Equipment and Tools Required	3−69
3−3.3.4.2	Initial Conditions/Preliminary Setup	3−69
3−3.3.4.3	Troubleshooting Procedure	3−70
3−3.3.5	Generator Shelter Heater UD10HR1 Troubleshooting	3−70
3−3.3.5.1	Equipment and Tools Required	3−70
3−3.3.5.2	Initial Conditions/Preliminary Setup	3−70
3−3.3.5.3	Troubleshooting Procedure	3−72
3−3.3.6	Security Panel Alarm Circuitry UD7A12 Troubleshooting	3−72
3−3.3.6.1	Equipment and Tools Required	3−73
3−3.3.6.2	Initial Conditions/Preliminary Setup	3−73
3−3.3.6.3	Troubleshooting Procedure	3−73
3−3.3.7	TPMS Environmental Control Unit UD60A11, UD60A12, UD60A15, and UD60A16 Troubleshooting	3−74
3−3.3.7.1	Equipment and Tools Required	3−74
3−3.3.7.2	Initial Conditions/Preliminary Setup	3−74
3−3.3.7.3	Troubleshooting Procedure	3−74
3−3.3.8	Electric Toilet UD60A4 Troubleshooting	3−75
3−3.3.8.1	Equipment and Tools Required	3−75
3−3.3.8.2	Initial Conditions/Preliminary Setup	3−75
3−3.3.8.3	Troubleshooting Procedure	3−76
SECTION 3−4.	PREVENTIVE MAINTENANCE	3−77
3−4.1	SERVICING	3−77
3−4.2	DIESEL FUEL TANK FOULING PREVENTION	3−77
SECTION 3−5.	REMOVAL AND REPLACEMENT PROCEDURES	3−78
3−5.1	REMOVAL AND REPLACEMENT PROCEDURES	3−78
3−5.2	RPIE LRU AND COMPONENT REMOVAL/REPLACEMENT AND GENERAL CONSIDERATIONS	3−78
3−5.3	HANDLING OF ELECTROSTATIC SENSITIVE DEVICES (ESD)	3−78
3−5.4	RDA/RPG/RBDDS EQUIPMENT SHUTDOWN PROCEDURES	3−79
3−5.5	RDA/RPG/RBDDS EQUIPMENT STARTUP PROCEDURES	3−82
3−5.6	REMOVAL/REPLACEMENT PROCEDURES	3−84
3−5.6.1	Circuit Breaker, Main Power Distribution Panel UD7A2 Removal/Replacement	3−88
3−5.6.1.1	Equipment and Tools Required	3−88

Number	Title	Page
3−5.6.1.2	Initial Conditions/Preliminary Setup	3−88
3−5.6.1.3	Removal/Replacement Procedure	3−88
3−5.6.2	Circuit Breaker, Secondary Power Distribution Panel UD7A3 Removal/Replacement	3−89
3−5.6.2.1	Equipment and Tools Required	3−89
3−5.6.2.2	Initial Conditions/Preliminary Setup	3−89
3−5.6.2.3	Removal/Replacement Procedure	3−90
3−5.6.3	Vibrating Alarm Horn UD7A4 Removal/Replacement	3−90
3−5.6.3.1	Equipment and Tools Required	3−90
3−5.6.3.2	Initial Conditions/Preliminary Setup	3−91
3−5.6.3.3	Removal/Replacement Procedure	3−91
3−5.6.4	Printed Circuit Board, Micro 1 EV UD7A5A1 Removal/Replacement	3−92
3−5.6.4.1	Equipment and Tools Required	3−92
3−5.6.4.2	Initial Conditions/Preliminary Setup	3−92
3−5.6.4.3	Removal/Replacement Procedure	3−93
3−5.6.5	Manual Discharge and Abort Stations UD7A6 and A7 Removal/Replacement	3−96
3−5.6.5.1	Equipment and Tools Required	3−97
3−5.6.5.2	Initial Conditions/Preliminary Setup	3−97
3−5.6.5.3	Removal/Replacement Procedure	3−97
3−5.6.6	Surge Suppressor UD7A11 Removal/Replacement	3−98
3−5.6.6.1	Equipment and Tools Required	3−99
3−5.6.6.2	Initial Conditions/Preliminary Setup	3−99
3−5.6.6.3	Removal/Replacement Procedure	3−100
3−5.6.7	Protector Module, Surge Suppressor UD7A11A1 Removal/Replacement	3−101
3−5.6.7.1	Equipment and Tools Required	3−101
3−5.6.7.2	Initial Conditions/Preliminary Setup	3−102
3−5.6.7.3	Removal/Replacement Procedure	3−102
3−5.6.8	Air Conditioner Clogged Filter Indicator UD7A14 and A15 Removal/Replacement	3−103
3−5.6.8.1	Equipment and Tools Required	3−103
3−5.6.8.2	Initial Conditions/Preliminary Setup	3−103
3−5.6.8.3	Removal/Replacement Procedure	3−103
3−5.6.9	Transmitter Clogged Filter Indicator UD7A16 Removal/Replacement	3−105
3−5.6.9.1	Equipment and Tools Required	3−105
3−5.6.9.2	Initial Conditions/Preliminary Setup	3−105
3−5.6.9.3	Removal/Replacement Procedure	3−105
3−5.6.10	Photoelectric UD7A17 and Ionization UD7A23 Smoke Detector Removal/Replacement	3−106
3−5.6.10.1	Equipment and Tools Required	3−107
3−5.6.10.2	Initial Conditions/Preliminary Setup	3−107
3−5.6.10.3	Removal/Replacement Procedure	3−107
3−5.6.11	Air Conditioners Discharge Air Temperature Sensors UD7A18, UD7A19 and Transmitter Exhaust Air Temperature Sensor UD7A21 Removal/Replacement	3−108

Number	Title	Page
3−5.6.11.1	Equipment and Tools Required	3−108
3−5.6.11.2	Initial Conditions/Preliminary Setup	3−109
3−5.6.11.3	Removal/Replacement Procedure	3−109
3−5.6.11.3.1	Part 1 − Air Conditioners Discharge Air Temperature Sensors UD7A18 and UD7A19	3−109
3−5.6.11.3.2	Part 2 − Transmitter Exhaust Air Temperature Sensor UD7A21	3−110
3−5.6.12	Interior (Room) Air Temperature Sensor UD7A20 and UD10A7 Removal/Replacement	3−111
3−5.6.12.1	Equipment and Tools Required	3−111
3−5.6.12.2	Initial Conditions/Preliminary Setup	3−111
3−5.6.12.3	Removal/Replacement Procedure	3−111
3−5.6.13	Exterior Air Temperature Sensor UD7A22 Removal/Replacement	3−112
3−5.6.13.1	Equipment and Tools Required	3−112
3−5.6.13.2	Initial Conditions/Preliminary Setup	3−112
3−5.6.13.3	Removal/Replacement Procedure	3−112
3−5.6.14	Evaporator Fan Motor UD7AC1B1 or UD7AC2B1 Removal/Replacement	3−113
3−5.6.14.1	Equipment and Tools Required	3−114
3−5.6.14.2	Initial Conditions/Preliminary Setup	3−114
3−5.6.14.3	Removal/Replacement Procedure	3−114
3−5.6.15	Condenser Fan Motor UD7AC1B2 or UD7AC2B2 Removal/Replacement	3−117
3−5.6.15.1	Equipment and Tools Required	3−117
3−5.6.15.2	Initial Conditions/Preliminary Setup	3−118
3−5.6.15.3	Removal/Replacement Procedure	3−118
3−5.6.16	Economizer ECW−4A (P/O UD7AC2 Model WA60) Removal/Replacement	3−120
3−5.6.16.1	Equipment and Tools Required	3−120
3−5.6.16.2	Initial Conditions/Preliminary Setup	3−120
3−5.6.16.3	Removal/Replacement Procedure	3−120
3−5.6.17	Economizer EIFM−5A (P/O UD7AC2 Model WA601 or WA602) Removal/Replacement	3−123
3−5.6.17.1	Equipment and Tools Required	3−123
3−5.6.17.2	Initial Conditions/Preliminary Setup	3−123
3−5.6.17.3	Removal/Replacement Procedure	3−123
3−5.6.18	Alarm Strobe Light UD7DS1 Removal/Replacement	3−126
3−5.6.18.1	Equipment and Tools Required	3−126
3−5.6.18.2	Initial Conditions/Preliminary Setup	3−126
3−5.6.18.3	Removal/Replacement Procedure	3−126
3−5.6.19	Exterior Incandescent Light Fixture UD7DS2, UD10DS1, UD13DS1, and UD60A5LF8 through UD60A5LF10 Removal/Replacement	3−127
3−5.6.19.1	Equipment and Tools Required	3−127
3−5.6.19.2	Initial Conditions/Preliminary Setup	3−127
3−5.6.19.3	Removal/Replacement Procedure	3−128

Number	Title	Page
3−5.6.20	Thermostat UD7S3 and S4 (for AC without Economizer) Removal/Replacement	3−128
3−5.6.20.1	Equipment and Tools Required	3−128
3−5.6.20.2	Initial Conditions/Preliminary Setup	3−129
3−5.6.20.3	Removal/Replacement Procedure	3−129
3−5.6.21	Two−Stage Thermostat UD7S4 (for AC with Economizer) Removal/Replacement	3−130
3−5.6.21.1	Equipment and Tools Required	3−130
3−5.6.21.2	Initial Conditions/Preliminary Setup	3−130
3−5.6.21.3	Removal/Replacement Procedure	3−130
3−5.6.22	Thermostat, Ventilation UD7S5 Removal/Replacement	3−131
3−5.6.22.1	Equipment and Tools Required	3−131
3−5.6.22.2	Initial Conditions/Preliminary Setup	3−131
3−5.6.22.3	Removal/Replacement Procedure	3−132
3−5.6.23	Contactor UD7S6 (RDA Shelter) Removal/Replacement	3−132
3−5.6.23.1	Equipment and Tools Required	3−133
3−5.6.23.2	Initial Conditions/Preliminary Setup	3−133
3−5.6.23.3	Removal/Replacement Procedure	3−134
3−5.6.24	Circuit Breaker Main CB1/3, Generator Shelter Power Distribution Panel UD10A2 Removal/Replacement	3−136
3−5.6.24.1	Equipment and Tools Required	3−136
3−5.6.24.2	Initial Conditions/Preliminary Setup	3−137
3−5.6.24.3	Removal/Replacement Procedure	3−137
3−5.6.25	Circuit Breaker CB5−CB9, Generator Shelter Power Distribution Panel UD10A2 Removal/Replacement	3−138
3−5.6.25.1	Equipment and Tools Required	3−138
3−5.6.25.2	Initial Conditions/Preliminary Setup	3−139
3−5.6.25.3	Removal/Replacement Procedure	3−139
3−5.6.26	Generator Fuel Level Sensor Assembly UD10A6A1 Removal/Replacement	3−140
3−5.6.26.1	Equipment and Tools Required	3−140
3−5.6.26.2	Initial Conditions/Preliminary Setup	3−140
3−5.6.26.3	Removal/Replacement Procedure	3−140
3−5.6.27	Electronic Unit, Fuel Level Sensor UD10A6A1A2 Removal/Replacement	3−141
3−5.6.27.1	Equipment and Tools Required	3−141
3−5.6.27.2	Initial Conditions/Preliminary Setup	3−142
3−5.6.27.3	Removal/Replacement Procedure	3−142
3−5.6.28	Spark Arrestor and Surge Suppressor, Fuel Level Sensor UD10A6A1E1/E2 Removal/Replacement	3−144
3−5.6.28.1	Equipment and Tools Required	3−144
3−5.6.28.2	Initial Conditions/Preliminary Setup	3−144
3−5.6.28.3	Removal/Replacement Procedure	3−145
3−5.6.29	Thermal Detector UD10A8 Removal/Replacement	3−147

Number	Title	Page
3−5.6.29.1	Equipment and Tools Required	3−147
3−5.6.29.2	Initial Conditions/Preliminary Setup	3−147
3−5.6.29.3	Removal/Replacement Procedure	3−148
3−5.6.30	Surge Protector UD10A20 Removal/Replacement	3−148
3−5.6.30.1	Equipment and Tools Required	3−149
3−5.6.30.2	Initial Conditions/Preliminary Setup	3−149
3−5.6.30.3	Removal/Replacement Procedure	3−150
3−5.6.31	LED Assembly, Surge Suppressor UD10A20DS1 − DS3 Removal/Replacement	3−155
3−5.6.31.1	Equipment and Tools Required	3−155
3−5.6.31.2	Initial Conditions/Preliminary Setup	3−155
3−5.6.31.3	Removal/Replacement Procedure	3−156
3−5.6.32	Protector Modules, Surge Suppressor UD10A20E1−E6 Removal/Replacement	3−157
3−5.6.32.1	Equipment and Tools Required	3−158
3−5.6.32.2	Initial Conditions/Preliminary Setup	3−158
3−5.6.32.3	Removal/Replacement Procedure	3−159
3−5.6.33	N−G Protector, Surge Suppressor UD10A20E2 Removal/Replacement	3−161
3−5.6.33.1	Equipment and Tools Required	3−162
3−5.6.33.2	Initial Conditions/Preliminary Setup	3−162
3−5.6.33.3	Removal/Replacement Procedure	3−163
3−5.6.34	Fuses, Surge Suppressor UD10A20F1−F3 Removal/Replacement	3−164
3−5.6.34.1	Equipment and Tools Required	3−164
3−5.6.34.2	Initial Conditions/Preliminary Setup	3−164
3−5.6.34.3	Removal/Replacement Procedure	3−165
3−5.6.35	Thermostat, Ventilation UD10S2 Removal/Replacement	3−166
3−5.6.35.1	Equipment and Tools Required	3−166
3−5.6.35.2	Initial Conditions/Preliminary Setup	3−166
3−5.6.35.3	Removal/Replacement Procedure	3−166
3−5.6.36	Accessory Control Panel UD10A1A1−1 Removal/Replacement	3−167
3−5.6.36.1	Equipment and Tools Required	3−167
3−5.6.36.2	Initial Conditions/Preliminary Setup	3−167
3−5.6.36.3	Removal/Replacement Procedure	3−168
3−5.6.37	Relay, Accessory Control Panel UD10A1A1K1−1 through UD10A1A1K3−1 Removal/Replacement	3−169
3−5.6.37.1	Equipment and Tools Required	3−169
3−5.6.37.2	Initial Conditions/Preliminary Setup	3−169
3−5.6.37.3	Removal/Replacement Procedure	3−170
3−5.6.38	Transformer, Accessory Control Panel UD10A1A1T1−1 and UD10A1A1T2−1 Removal/Replacement	3−171
3−5.6.38.1	Equipment and Tools Required	3−171
3−5.6.38.2	Initial Conditions/Preliminary Setup	3−172
3−5.6.38.3	Removal/Replacement Procedure	3−172

Number	Title	Page
3−5.6.39	Signal Module UD10A1A2−1 Removal/Replacement	3−173
3−5.6.39.1	Equipment and Tools Required	3−173
3−5.6.39.2	Initial Conditions/Preliminary Setup	3−174
3−5.6.39.3	Removal/Replacement Procedure	3−174
3−5.6.40	Exerciser Clock UD10A1A3−1 Removal/Replacement	3−175
3−5.6.40.1	Equipment and Tools Required	3−175
3−5.6.40.2	Initial Conditions/Preliminary Setup	3−176
3−5.6.40.3	Removal/Replacement Procedure	3−176
3−5.6.41	Power Sentry Motherboard UD10A1A4−1 Removal/Replacement	3−178
3−5.6.41.1	Equipment and Tools Required	3−178
3−5.6.41.2	Initial Conditions/Preliminary Setup	3−178
3−5.6.41.3	Removal/Replacement Procedure	3−178
3−5.6.42	Power Sentry PCB (Source 1 Voltage Sensing Module UD10A1A4A1−1, Source 2 Voltage Sensing Module UD10A1A4A3−1, and Timer Delay Module UD10A1A4A2−1) Removal/Replacement	3−180
3−5.6.42.1	Equipment and Tools Required	3−180
3−5.6.42.2	Initial Conditions/Preliminary Setup	3−181
3−5.6.42.3	Removal/Replacement Procedure	3−181
3−5.6.43	Battery Charger (Onan) UD10A1A6−1 Removal/Replacement	3−185
3−5.6.43.1	Equipment and Tools Required	3−185
3−5.6.43.2	Initial Conditions/Preliminary Setup	3−185
3−5.6.43.3	Removal/Replacement Procedure	3−185
3−5.6.44	Program Transition Module UD10A1A8−1 Removal/Replacement	3−187
3−5.6.44.1	Equipment and Tools Required	3−187
3−5.6.44.2	Initial Conditions/Preliminary Setup	3−187
3−5.6.44.3	Removal/Replacement Procedure	3−187
3−5.6.45	Power Sentry Transformer PCB Assembly UD10A1A9−1 Removal/Replacement	3−189
3−5.6.45.1	Equipment and Tools Required	3−189
3−5.6.45.2	Initial Conditions/Preliminary Setup	3−189
3−5.6.45.3	Removal/Replacement Procedure	3−189
3−5.6.46	Relay, Time Delay (Onan) UD10A1TD1 (K1) Removal/Replacement	3−190
3−5.6.46.1	Equipment and Tools Required	3−191
3−5.6.46.2	Initial Conditions/Preliminary Setup	3−191
3−5.6.46.3	Removal/Replacement Procedure	3−191
3−5.6.47	Relay, Auxiliary Contacts (Normal/Emergency Alarm/Control) UD10A1K2−1 and UD10A1K3−1 Removal/Replacement	3−192
3−5.6.47.1	Equipment and Tools Required	3−192
3−5.6.47.2	Initial Conditions/Preliminary Setup	3−192
3−5.6.47.3	Removal/Replacement Procedure	3−193
3−5.6.48	Relay, Auto/Manual Transfer Control UD10A1K7 (Onan) Removal/Replacement	3−193
3−5.6.48.1	Equipment and Tools Required	3−193

Number	Title	Page
3−5.6.48.2	Initial Conditions/Preliminary Setup	3−194
3−5.6.48.3	Removal/Replacement Procedure	3−194
3−5.6.49	Microcontroller Assembly UD10A1A1 Removal/Replacement	3−195
3−5.6.49.1	Equipment and Tools Required	3−195
3−5.6.49.2	Initial Conditions/Preliminary Setup	3−195
3−5.6.49.3	Removal/Replacement Procedure	3−195
3−5.6.50	Contactor Assembly (Generator Shelter) UD10A1A2 Removal/Replacement	3−197
3−5.6.50.1	Equipment and Tools Required	3−197
3−5.6.50.2	Initial Conditions/Preliminary Setup	3−197
3−5.6.50.3	Removal/Replacement Procedure	3−198
3−5.6.51	3−Phase Voltage Sensing Module PCB UD10A1A3 Removal/Replacement	3−199
3−5.6.51.1	Equipment and Tools Required	3−199
3−5.6.51.2	Initial Conditions/Preliminary Setup	3−199
3−5.6.51.3	Removal/Replacement Procedure	3−200
3−5.6.52	Relay PCB, Dry Contact UD10A1A4 and UD10A1A5 (DCK1/DCK2) Removal/Replacement	3−201
3−5.6.52.1	Equipment and Tools Required	3−201
3−5.6.52.2	Initial Conditions/Preliminary Setup	3−201
3−5.6.52.3	Removal/Replacement Procedure	3−202
3−5.6.53	Battery Charger (Kohler) UD10A1A6 Removal/Replacement	3−203
3−5.6.53.1	Equipment and Tools Required	3−203
3−5.6.53.2	Initial Conditions/Preliminary Setup	3−203
3−5.6.53.3	Removal/Replacement Procedure	3−203
3−5.6.54	Load Shed PCB UD10A1A7 Removal/Replacement	3−204
3−5.6.54.1	Equipment and Tools Required	3−204
3−5.6.54.2	Initial Conditions/Preliminary Setup	3−205
3−5.6.54.3	Removal/Replacement Procedure	3−205
3−5.6.55	Relay Assembly (PCB), Dry Contact (10 Relay) UD10A1A8 (LSCK) Removal/Replacement	3−206
3−5.6.55.1	Equipment and Tools Required	3−207
3−5.6.55.2	Initial Conditions/Preliminary Setup	3−207
3−5.6.55.3	Removal/Replacement Procedure	3−207
3−5.6.56	Fuses UD10A1F1−F4 Removal/Replacement	3−208
3−5.6.56.1	Equipment and Tools Required	3−208
3−5.6.56.2	Initial Conditions/Preliminary Setup	3−208
3−5.6.56.3	Removal/Replacement Procedure	3−208
3−5.6.57	Relay, Time Delay (Kohler) UD10A1TD1(K1) Removal/Replacement	3−209
3−5.6.57.1	Equipment and Tools Required	3−209
3−5.6.57.2	Initial Conditions/Preliminary Setup	3−209
3−5.6.57.3	Removal/Replacement Procedure	3−209
3−5.6.58	Relay, Voltage Sensing (VSR) UD10A1K2 Removal/Replacement	3−210

Number	Title	Page
3−5.6.58.1	Equipment and Tools Required	3−210
3−5.6.58.2	Initial Conditions/Preliminary Setup	3−210
3−5.6.58.3	Removal/Replacement Procedure	3−211
3−5.6.59	Relay UD10A1K3−K7 Removal/Replacement	3−211
3−5.6.59.1	Equipment and Tools Required	3−212
3−5.6.59.2	Initial Conditions/Preliminary Setup	3−212
3−5.6.59.3	Removal/Replacement Procedure	3−212
3−5.6.60	Transformer UD10A1T1−T3 Removal/Replacement	3−213
3−5.6.60.1	Equipment and Tools Required	3−213
3−5.6.60.2	Initial Conditions/Preliminary Setup	3−213
3−5.6.60.3	Removal/Replacement Procedure	3−214
3−5.6.61	Damper Motor Actuator UD11A1B1 Removal/Replacement	3−214
3−5.6.61.1	Equipment and Tools Required	3−214
3−5.6.61.2	Initial Conditions/Preliminary Setup	3−215
3−5.6.61.3	Removal/Replacement Procedure	3−215
3−5.6.62	Vent Fan Assembly UD11A2 Removal/Replacement	3−216
3−5.6.62.1	Equipment and Tools Required	3−216
3−5.6.62.2	Initial Conditions/Preliminary Setup	3−217
3−5.6.62.3	Removal/Replacement Procedure	3−217
3−5.6.63	Motor, Radome Fan UD11A2B1 Removal/Replacement	3−219
3−5.6.63.1	Equipment and Tools Required	3−219
3−5.6.63.2	Initial Conditions/Preliminary Setup	3−219
3−5.6.63.3	Removal/Replacement Procedure	3−220
3−5.6.64	Aircraft Warning Light UD12A1DS1/DS2 Removal/Replacement	3−222
3−5.6.64.1	Equipment and Tools Required	3−222
3−5.6.64.2	Initial Conditions/Preliminary Setup	3−222
3−5.6.64.3	Removal/Replacement Procedure	3−223
3−5.6.65	Circuit Breaker, Microwave Line of Sight (MLOS) Power Distribution Panel UD13A1 Removal/Replacement	3−227
3−5.6.65.1	Equipment and Tools Required	3−227
3−5.6.65.2	Initial Conditions/Preliminary Setup	3−227
3−5.6.65.3	Removal/Replacement Procedure	3−227
3−5.6.66	TPMS Electric Toilet UD60A4 Removal/Replacement	3−228
3−5.6.66.1	Equipment and Tools Required	3−228
3−5.6.66.2	Initial Conditions/Preliminary Setup	3−228
3−5.6.66.3	Removal/Replacement Procedure	3−229
3−5.6.67	Circuit Breaker, TPMS Shelter Power Distribution System Panel UD60A5 Removal/Replacement	3−229
3−5.6.67.1	Equipment and Tools Required	3−229
3−5.6.67.2	Initial Conditions/Preliminary Setup	3−229
3−5.6.67.3	Removal/Replacement Procedure	3−230
3−5.6.68	Hydrogen Detector UD60A10 Removal/Replacement	3−230
3−5.6.68.1	Equipment and Tools Required	3−230

Number	Title	Page
3−5.6.68.2	Initial Conditions/Preliminary Setup	3−231
3−5.6.68.3	Removal/Replacement Procedure	3−231
3−5.6.69	Sensor Board, Hydrogen Detector UD60A10A1 Removal/Replacement	3−233
3−5.6.69.1	Equipment and Tools Required	3−233
3−5.6.69.2	Initial Conditions/Preliminary Setup	3−233
3−5.6.69.3	Removal/Replacement Procedure	3−233
3−5.6.70	Circuit Breaker, Hydrogen Detector UD60A13CB1 Removal/Replacement	3−234
3−5.6.70.1	Equipment and Tools Required	3−234
3−5.6.70.2	Initial Conditions/Preliminary Setup	3−234
3−5.6.70.3	Removal/Replacement Procedure	3−234
3−5.6.71	TPMS ECU Thermostat UD60A14 Removal/Replacement	3−235
3−5.6.71.1	Equipment and Tools Required	3−236
3−5.6.71.2	Initial Conditions/Preliminary Setup	3−236
3−5.6.71.3	Removal/Replacement Procedure	3−236
3−5.6.72	TPMS Shelter High Temperature Shutdown Thermostat UD60A2A8 Removal/Replacement	3−236
3−5.6.72.1	Equipment and Tools Required	3−237
3−5.6.72.2	Initial Conditions/Preliminary Setup	3−237
3−5.6.72.3	Removal/Replacement Procedure	3−237
3−5.6.73	TPMS Shelter High Temperature Alarm Thermostat UD60A3A1 Removal/Replacement	3−239
3−5.6.73.1	Equipment and Tools Required	3−240
3−5.6.73.2	Initial Conditions/Preliminary Setup	3−240
3−5.6.73.3	Removal/Replacement Procedure	3−240
3−5.6.74	TPS Supervisory Contact Module (SCM) UD65 Circuit Board Removal/Replacement	3−241
3−5.6.74.1	Equipment and Tools Required	3−241
3−5.6.74.2	Initial Conditions/Preliminary Setup	3−241
3−5.6.74.3	Removal/Replacement Procedure	3−242
SECTION 3−6.	ALIGNMENT AND ADJUSTMENT PROCEDURES	3−244
3−6.1	GENERAL INFORMATION	3−244
3−6.2	ROOM INTERIOR AIR TEMPERATURE SENSOR MODEL 753 TEMPERATURE VOLTAGE TEST	3−244
3−6.2.1	Equipment and Tools Required	3−244
3−6.2.2	Voltage Check Procedure	3−244
3−6.2.3	Zero and Span Adjustment Procedure	3−245
3−6.3	RTD TEMPERATURE SENSOR ALIGNMENT (FOR NEW REPLACEMENT)	3−247
3−6.3.1	Equipment and Tools Required	3−247
3−6.3.2	Alignment Procedure	3−247
3−6.4	CLOGGED FILTER INDICATOR ADJUSTMENT	3−247

Number	Title	Page
3−6.4.1	Equipment and Tools Required	3−247
3−6.4.2	Initial Conditions/Preliminary Setup	3−247
3−6.4.3	Adjustment Procedure	3−248
3−6.5	CLOGGED FILTER INDICATOR ADJUSTMENT FOR RDA EQUIPMENT SHELTERS WITH A/C ECONOMIZER	3−254
3−6.5.1	Equipment and Tools Required	3−254
3−6.5.2	Initial Conditions/Preliminary Setup	3−254
3−6.5.3	Adjustment Procedure	3−255
3−6.6	FUEL LEVEL SENSOR − CALIBRATION CHECK AND ADJUSTMENT	3−255
3−6.6.1	Equipment and Tools Required	3−255
3−6.6.2	Calibration Check Procedure	3−256
3−6.6.3	Fuel Level Sensor Calibration	3−257
3−6.7	TIME DELAY RELAY (TD1) CHECKOUT	3−262
3−6.7.1	Equipment and Tools Required	3−262
3−6.7.2	Initial Conditions/Preliminary Setup	3−262
3−6.7.3	Adjustment Procedure	3−262
3−6.8	HATCH INTERLOCK SWITCH ADJUSTMENT	3−263
3−6.8.1	Equipment and Tools Required	3−263
3−6.8.2	Initial Conditions/Preliminary Setup	3−263
3−6.8.3	Adjustment Procedure	3−263
CHAPTER 4	**WIRING DIAGRAMS**	**4−1**
SECTION 4−1.	GENERAL DESCRIPTION	4−1
4−1.1	GENERAL DESCRIPTION	4−1
SECTION 4−2.	WIRING DIAGRAMS	4−2
4−2.1	WIRING DIAGRAMS	4−2
APPENDIX	**MICRO JUNIOR CONTROL PANEL FIRE SUPPRESSION DATA**	**A−1**
A−1.	General Information	A−1
A−1.1	GENERAL DESCRIPTION	A−1
A−1.2	FIRE DETECTION SYSTEM − PERFORMANCE CHECK	A−1
A−1.2.1	Equipment and Tools Required	A−1
A−1.2.2	Initial Conditions/Preliminary Setup	A−1
A−1.2.3	Preventive Maintenance Procedures	A−2
A−1.3	BATTERY UD7A5BT1, BT2 − PERFORM BATTERY LOAD TEST	A−6
A−1.3.1	Equipment and Tools Required	A−6
A−1.3.2	Initial Conditions/Preliminary Setup	A−6
A−1.3.3	Preventive Maintenance Procedures	A−6

Number	Title	Page
A−1.4	PRINTED CIRCUIT BOARD, MICRO JUNIOR UD7A5A1 REMOVAL/REPLACEMENT	A−7
A−1.4.1	Equipment and Tools Required	A−7
A−1.4.2	Initial Conditions/Preliminary Setup	A−8
A−1.4.3	Removal/Replacement Procedure	A−9
A−1.5	TRANSFORMER, MICRO JUNIOR UD7A5T1 REMOVAL/REPLACEMENT	A−12
A−1.5.1	Equipment and Tools Required	A−12
A−1.5.2	Initial Conditions/Preliminary Setup	A−12
A−1.5.3	Removal/Replacement Procedure	A−13
A−1.6	RDA EQUIPMENT SHELTER FIRE DETECTION AND SUPPRESSION	A−14
	INDEX	**Index 1**
	GLOSSARY	**Glossary 1**

LIST OF ILLUSTRATIONS

Figure	Title	Page
Figure SS−1.	Radiation Hazard Zones	xxix
Figure 1−1.	Antenna Radome Deck RPIE Component Layout	1−20
Figure 1−2.	Antenna Pedestal RPIE Component Layout	1−21
Figure 1−3.	RDA Generator Shelter, UD10, Configuration	1−22
Figure 1−4.	RDA Generator Shelter Equipment Layout UD10, Configuration	1−23
Figure 1−5.	RDA Equipment Shelter Configuration (NWS) (2 Sheets)	1−24
Figure 1−6.	Transition Power Maintenance Shelter Configuration (Type 1, 2, and 4) (3 Sheets)	1−26
Figure 1−7.	MLOS Shelter UD13 RPIE Configuration	1−29
Figure 1−8.	Diesel Generator (Onan) UD10M1/G1, Component Layout (2 Sheets)	1−30
Figure 1−9.	Diesel Generator (Kohler) UD10M1/G1, Component Layout	1−32
Figure 1−10.	Transition Power Source Component Layout (Type 1, 2, and 4) (2 Sheets)	1−33
Figure 1−11.	Onan OT III Automatic Transfer Switch UD10A1−1, Component Layout	1−35
Figure 1−12.	Kohler Automatic Transfer Switch UD10A1, Component Layout	1−36
Figure 1−13.	RDA Site Generator Shelter Power Distribution Panel, UD10A2	1−37
Figure 1−14.	RDA Equipment Shelter Main Power Distribution Panel, UD7A2	1−38
Figure 1−15.	RDA Equipment Shelter Secondary Power Distribution Panel, UD7A3	1−39
Figure 1−16.	TPMS Shelter Power Distribution System Panel, UD60A5 (Type 1 and 2) (2 Sheets)	1−40
Figure 1−17.	MLOS Shelter Power Distribution Panel, UD13A1	1−42
Figure 1−18.	Transition Power Maintenance Shelter Alarm Termination Panel, UD60A6	1−43
Figure 1−19.	RDA Shelter Sensor and Vent Location (4 Sheets)	1−44
Figure 1−20.	Fire Detection Micro 1 EV or Junior Control Panel, UD7A5	1−48
Figure 1−21.	Tower Security Gate	1−49
Figure 1−22.	MLOS Shelter Vac Distribution	1−70
Figure 1−23.	Generator Shelter Fire Detection Circuitry	1−71
Figure 1−24.	RDA Equipment Shelter Fire Detection System Circuitry	1−72
Figure 1−25.	Security Panel Diagram	1−73
Figure 1−26.	Temperature and Fuel Level Sensor Diagram	1−74
Figure 1−27.	Dirty Filter Sensor (Indicator) Diagram	1−75
Figure 1−28.	Aircraft Warning Light Circuitry Diagram	1−76
Figure FO1−1.	Generator Shelter Power Distribution (Onan Generator)	FP−1−1
Figure FO1−2.	Generator Shelter Power Distribution (Kohler Generator)	FP−1−3
Figure FO1−3.	RDA Equipment Shelter Power Distribution (11 Sheets)	FP−1−5
Figure FO1−4.	TPMS Electrical Power Distribution (Type 1 and 2 TPMS) (3 Sheets)	FP−1−27
Figure FO1−5.	Transition Power Source Power Distribution (Type 1, 2, and 4) (2 Sheets)	FP−1−33

Figure	Title	Page
Figure 2−1.	RDA Air Conditioner #1 or #2 and TPMS ECU Control Thermostat (Typical)	2−5
Figure 2−2.	RDA Air Conditioner #2 with Economizer, Two Stage Control Thermostat	2−6
Figure 2−3.	RDA Air Conditioner #2 with Economizer, Control Panel (Typical)	2−7
Figure 2−4.	Generator Shelter Automatic Transfer Switch Front Panel Controls and Indicators (Onan)	2−8
Figure 2−5.	Generator Shelter Automatic Transfer Switch Front Panel Controls and Indicators (Kohler) (2 Sheets)	2−9
Figure 2−6.	Generator Control Panel, Controls and Indicators (Onan) (2 Sheets)	2−11
Figure 2−7.	Generator Control Panel, Controls and Indicators (Kohler)	2−13
Figure 2−8.	TPS Control and Monitor Panel Controls and Indicators	2−14
Figure 2−9.	Radome Venting Control Thermostat	2−15
Figure 3−1.	RPIE Fault Isolation Flowchart (Maint Mand) Tower Utilities (4 Sheets)	3−51
Figure 3−2.	RPIE Fault Isolation Flowchart (Maint Req'd) Tower Utilities (5 Sheets)	3−55
Figure 3−3.	Internal Temperature Sensor, Weed Model 753	3−250
Figure 3−4.	RTD Resistance Chart	3−251
Figure 3−5.	RTD Temperature Sensor Alignment Diagrams	3−252
Figure 3−6.	Air Conditioner/Transmitter Discharge and Exterior Air Temperature Sensor	3−253
Figure 3−7.	Step Span Switch and Zero and Span Controls	3−265
Figure 4−1.	Radome Sensor Diagram	4−3
Figure 4−2.	Generator Shelter Fire Detection Circuit	4−4
Figure 4−3.	Radome Temperature Sensor and RTD Circuitry	4−5
Figure 4−4.	Generator Control Panel Alarm and Control Circuitry (Onan Generator)	4−6
Figure 4−5.	Generator Control Panel Alarm and Control Circuitry (Kohler Generator) (2 Sheets)	4−8
Figure 4−6.	Auto−Transfer Switch Power Distribution Circuitry (Onan and Kohler Generators)	4−9
Figure 4−7.	Transmitter Venting Circuitry	4−10
Figure 4−8.	Radome Venting Circuitry	4−11
Figure 4−9.	Generator Shelter Venting Circuitry	4−12
Figure 4−10.	Radome, Equipment Shelter Standard Telephone (Intercom) Circuit Diagram	4−13
Figure 4−11.	Radome, Equipment Shelter Sound Powered Telephone (Intercom) Circuit Diagram	4−14
Figure 4−12.	MLOS Shelter Power Distribution	4−15
Figure FO4−1.	RDA Logic and Control for RDA Shelter, Power Distribution (Onan)	FP−4−1
Figure FO4−2.	RDA Logic and Control for RDA Shelter, Power Distribution (Kohler)	FP−4−3
Figure FO4−3.	RPIE Analog Status Data Processing, Functional Flow Diagram	FP−4−5
Figure FO4−4.	RPIE Discrete Status Data Monitoring Flow Diagram (Onan Generator and TPMS) (2 Sheets)	FP−4−7

Figure	Title	Page
Figure FO4−5.	RPIE Discrete Status Data Monitoring Functional Flow Diagram (Kohler Generator and TPMS) (2 Sheets)	FP−4−11
Figure FO4−6.	Generator Shelter (Onan) Sensor Inputs	FP−4−15
Figure FO4−7.	RDA Sensor (Onan) Wiring Diagram	FP−4−17
Figure FO4−8.	RDA Sensor (Kohler) Wiring Diagram	FP−4−19
Figure FO4−9.	Auto Transfer Switch (Onan Generator and TPMS) AC Power Distribution	FP−4−21
Figure FO4−10.	Auto Transfer Switch (Kohler Generator and TPMS) AC Power Distribution	FP−4−23
Figure FO4−11.	Auto−Transfer Switch (Onan Generator) Flow Chart (3 Sheets)	FP−4−25
Figure FO4−12.	Auto−Transfer Switch (Kohler Generator) Flow Chart (3 Sheets)	FP−4−31
Figure FO4−13.	TPMS Discrete Status Data Monitoring Functional Flow Diagram	FP−4−37
Figure FO4−14.	TPS Schematic Diagram, Top Level, Powerware Plus 80 (4 Sheets)	FP−4−39
Figure FO4−15.	TPS Schematic Diagram, Battery Cabinet, 685/1085	FP−4−47
Figure FO4−16.	TPS Schematic Diagram, Supervisory Contact Board, (Customer Connections)	FP−4−49
Figure A−1.	RDA Equipment Shelter Fire Suppression System Circuitry	A−16

LIST OF TABLES

Table	Title	Page
Table 1−1.	RPIE Major Power Generation and Distribution Component Description	1−6
Table 1−2.	RPIE Major Heating, Ventilation, and Air Conditioning Component Description	1−9
Table 1−3.	RPIE Major Fire Detection and Suppression Component Description	1−11
Table 1−4.	RPIE Major Security and Auxiliary Component Description	1−12
Table 1−5.	Radome, Towers, MLOS Antenna and Shelter Characteristics	1−14
Table 1−6.	RDA Site Air Conditioner Setup	1−62
Table 1−7.	Temperature Sensor Temperature Range	1−64
Table 1−8.	TPMS Type Matrix	1−69
Table 2−1.	Power Distribution Subsystem Power−up Procedures	2−16
Table 2−2.	HVAC Subsystem Power−up Procedures	2−24
Table 2−3.	Fire Detection Subsystem Power−up Procedures (for Micro 1 EV Control Panel 1)	2−26
Table 2−4.	Security and Auxiliary Subsystem Power−up Procedures	2−31
Table 2−5.	RPIE Power Shutdown Procedures	2−32
Table 2−6.	RDA Tower/Utilities Operational Check Procedures	2−38
Table 2−7.	Tower Utility Performance Data Parameters	2−39
Table 2−8.	Removing the TPS from Normal Operation/TPS Shutdown Procedure	2−41
Table 2−9.	TPS Power−up/Restoring TPS to Normal Operation Procedure	2−43
Table 3−1.	RPIE System Checkout Index	3−2
Table 3−2.	Air Conditioner #1 or #2 Control Circuitry Verification of Operation Check	3−4
Table 3−3.	Air Conditioner AC2 Economizer Control Circuitry Verification of Operation Check	3−5
Table 3−4.	Transmitter Venting Control Circuitry Verification of Operation Check	3−9
Table 3−5.	Generator Shelter Venting Control Circuitry Verification of Operation Check	3−11
Table 3−6.	Generator Venting Control Circuitry Verification of Operation Check	3−12
Table 3−7.	Generator Shelter Heating Control Circuitry Verification of Operation Check	3−14
Table 3−8.	Radome Venting Control Circuitry Verification of Operation Check	3−15
Table 3−9.	RDA Shelter Fire Suppression Subsystem Circuitry Verification of Operation Check1	3−17
Table 3−10.	Generator Shelter Thermal Detector Circuitry Verification of Operation Check	3−20
Table 3−11.	Security Alarm Panel Control Circuitry Verification of Operation Check	3−21
Table 3−12.	Air Conditioner #1 or #2 Exhaust (Shelter Output) Air Temperature Circuitry Verification of Operation Check	3−24
Table 3−13.	Transmitter Vent Exhaust Air Temperature Sensor Circuitry Verification of Operation Check	3−27
Table 3−14.	Clogged Filter Indicator Circuitry of Operation Check	3−29

Table 3−15.	Exterior Air Temperature Sensor Circuitry Verification of Operation Check	3−30
Table 3−16.	Interior Air Temperature Sensor Circuitry Verification of Operation Check	3−32
Table 3−17.	Generator Shelter Air Temperature Sensor Circuitry Verification of Operation Check	3−34
Table 3−18.	Radome Air Temperature Sensor Circuitry Verification of Operation Check	3−36
Table 3−19.	Aircraft Warning Lights Control Circuitry Verification of Operation Check	3−38
Table 3−20.	TPMS Environmental Control Unit Operational Check	3−39
Table 3−21.	TPMS Electric Toilet Operational Check	3−42
Table 3−22.	TPS Operational Check	3−43
Table 3−23.	Hydrogen Detector Operational Check	3−45
Table 3−24.	Generator Ventilation Circuitry Troubleshooting Chart	3−71
Table 3−25.	RPIE Removal/Replacement Procedure Index	3−85
Table 3−26.	Air Temperature Sensor Cal Temp/Ohm Range	3−246
Table A−1.	Fire Detection Subsystem Power−Up Procedures (for Micro Junior Control Panel)	A−7
Table A−2.	RDA Shelter Fire Detection System Circuitry Verification of Operation Check (for Micro Junior Control Panel)	A−11

FOREWORD

The RPIE System is comprised of five subsystems and is located within the radar tower, the generator shelter, transition power maintenance shelter, and the equipment shelter. The five RPIE subsystems are: Power Generation and Distribution; Heating, Ventilation and Air Conditioning (HVAC); Fire Detection and Suppression; Security and Auxiliary; and Radome, Towers, and Shelter Support.

The RPIE system ties all of the RPIE subsystems together and reports to the RDA Data Processor cabinet. It is via this system that the operator/maintenance technician is able to evaluate the status of the site security; site environmental operational condition; power generation/distribution; fire detection/suppression; and the radome, towers, and support shelter subsystems. The RPIE system reports to the RDA Data Processor cabinet using analog and discrete signals to indicate the operational condition or status of the five RPIE subsystems.

SAFETY SUMMARY

1. GENERAL SAFETY INSTRUCTIONS.

This manual describes physical and chemical processes which may cause injury or death to personnel, or damage to equipment if not properly followed. This safety summary includes general safety precautions and instructions that must be understood and applied during operation and maintenance to ensure personnel safety and protection of equipment. Prior to performing any task, the WARNINGs, CAUTIONs, and NOTEs included in that task shall be reviewed and understood.

2. WARNINGS, CAUTIONS, AND NOTES.

WARNINGs and CAUTIONs are used in this manual to highlight operating or maintenance procedures, practices, conditions, or statements which are considered essential to protection of personnel (WARNING) or equipment (CAUTION). WARNINGs and CAUTIONs immediately precede the step or procedure to which they apply. WARNINGs and CAUTIONs consist of four parts: heading (WARNING or CAUTION), a statement of the hazard, minimum precautions, and possible result if disregarded. NOTEs are used in this manual to highlight operating or maintenance procedures, practices, conditions, or statements which are not essential to protection of personnel or equipment. NOTEs may precede or follow the step or procedure, depending upon the information to be highlighted. The headings used and their definitions are as follows.

WARNING

Highlights an essential operating or maintenance procedure, practice, condition, statement, etc., which if not strictly observed, could result in injury to, or **DEATH** of, personnel or long term health hazards.

CAUTION

Highlights an essential operating or maintenance procedure, practice, condition, statement, etc., which if not strictly observed, could result in damage to, or destruction of, equipment or loss of mission effectiveness.

NOTE

Highlights an essential operating or maintenance procedure, condition, or statement.

3. GENERAL SAFETY PRECAUTIONS.

The following safety precautions shall be observed while performing procedures in this manual.

- ELECTRICAL

  Dangerous voltages are present at system connectors. Ensure power is OFF prior to connecting or disconnecting cables.

- ELECTRONIC

  Do not wear metal frame glasses, rings, watches, or other metal jewelry while working on electronic equipment.

- HIGH VOLTAGE (POWER ON)

  Avoid contact with high voltage in the equipment, and do not remove safety guards, panels, or covers in the high voltage area. Severe injury or **DEATH** may occur upon contact with or in the proximity of high voltages due to electrical shock.

- HIGH VOLTAGE (POWER OFF)

  Avoid contact with the high voltage circuit area. Properly discharge all high voltage capacitors with the grounding rod. Dangerous high voltages exist when power is turned off and will remain until discharged. Severe injury or **DEATH** may occur upon contact with or in the proximity of high voltages due to electrical shock.

- KEEP AWAY FROM LIVE CIRCUITS

  Maintenance personnel must at all times observe all safety regulations. Do not replace components or make adjustments inside the equipment with the high voltage supply turned on. Under certain conditions, dangerous potentials may exist when the power control is in the off position due to charges retained by capacitors. To avoid casualties, always remove power, discharge and ground circuit before touching it.

- MICROWAVE RADIATION PRECAUTIONS

  The WSR−88D generates and detects electromagnetic energy at a transmitted frequency between 2.7 GHz and 3.0 GHz. This non−ionizing radiation is concentrated in the antenna beam. The potential hazard of this radiation to personnel is biological heating. Intense microwave radiation (power densities greater than 300 mW/cm^2 can result in biological damage such as the formation of cataracts or other opacities in the eyes.

  Service personnel must comply with the guidelines given in American Standards Institute C.95.1−1982 which states that for unrestrictive exposure to microwave radiation the body energy deposition averaged over the entire body mass for any 0.1 hour period must be kept to less than 144 joules per kilogram (J/kg). This is equivalent to a specific absorption rate (SAR) of 0.4 watts per kilogram. For the WSR−88D frequency band, this corresponds to a power density of 5 mW/cm^2.

  Average power densities less than 5 mW/cm^2 are regarded as safe for indefinite exposure. Power densities greater than 5 mW/cm^2 should be regarded as potentially hazardous.

- DIRECT ANTENNA INTO OPEN AREA WHEN TRANSMITTING

  When it is necessary to perform maintenance with power radiating from the antenna, take the necessary steps to keep the antenna directed into open area whenever possible.

- DO NOT SERVICE OR ADJUST ALONE

  Under no circumstances should any person reach into or enter an enclosure for the purpose of servicing or adjusting the equipment except in the presence of someone who is capable of rendering aid.

- RESUSCITATION

  Personnel working with or near high voltage should be familiar with modern methods of CPR. Such information may be obtained from the Red Cross or Heart Association. This knowledge may save a life.

- DO NOT WEAR JEWELRY

  Personnel performing maintenance on equipment are not to wear metal frame glasses, watches, rings, necklaces, bracelets, or other jewelry at any time. Electrical arcing can occur when metallic objects are in the proximity of voltage potentials. Jewelry can become entangled or otherwise restrict movement causing severe personal injury.

- ELEVATED WORK PLATFORM

  Use all handrails, safety chains, safety harness, safety rails, and ladders properly while servicing the antenna pedestal and tower. Install all safety equipment and ladders prior to maintenance tasks. Severe injury of **DEATH** may occur from impacting the surface below.

- FLAMMABLE AND/OR TOXIC MATERIALS

  Some cleaning materials specified herein are flammable and/or toxic. Keep away from open flame or other ignition sources. Provide adequate ventilation and avoid skin/eye exposure.

- COMPRESSED AIR

  Cleaning with compressed air can create airborne particles that may enter eyes or penetrate skin. Pressure shall not exceed 30 psig. Wear goggles. Do not direct compressed air against skin.

- 0365 ELECTRON AEROSOL, CLEANING COMPOUND

  Follow all safety precautions listed in the Material Safety Data Sheets for 0365 Electron Aerosol, Cleaning Compound. 0365 Electron Aerosol is flammable and releases flammable vapors. Do not use near an open flame or other sources of ignition. The use of 0365 Electron Aerosol in a closed area poses a health hazard. 0365 Electron Aerosol is toxic to skin and eyes. Use skin and eye protection. Failure to comply with all safety precautions listed in the Material Safety Data Sheets for 0365 Electron Aerosol Wipe Solvent may cause serious injury or **DEATH**. Dispose of contaminated 0365 Electron Aerosol in accordance with applicable federal, state, and local regulations.

- HOT SURFACES

  Avoid contact with the diesel engine and exhaust pipes during and after engine operation. Contact with hot surfaces can cause skin burns and other injuries reacting to hot surfaces.

- EXPLOSIVE GAS (FUEL)

  Clean and remove all fuel spills during engine service with absorbent materials or cloths. Ventilate the area of fuel spills and cleanup. Avoid sparks and open flames in the area. Fumes may accumulate and explode causing severe burns or **DEATH**.

- EXPLOSIVE GAS (BATTERIES)

  Service batteries only in a well−ventilated area. Hydrogen and Oxygen gases may accumulate during the charging process. Avoid sparks and open flames near batteries. Severe burns or **DEATH** may occur due to explosion.

- SULFURIC ACID

  Wear protective clothing, face shields, gloves, and aprons when servicing batteries. Severe skin and eye injury may occur upon contact with battery acid. Flush skin and eyes with water immediately and get medical attention.

- CLEANING SOLVENTS (GENERAL)

  Wear protective clothing, safety goggles, and gloves when using toxic cleaning solvents. Repeated and prolonged contact may cause skin and eye irritation. Flush skin and eyes with water. Remove clothing saturated with cleaning solvent.

- CLEANING SOLVENTS (INHALATION)

  Use cleaning solvents only in a well−ventilated area. Avoid inhalation of cleaning solvents. Asphyxiation or **DEATH** may occur from prolonged exposure to fumes.

- REFRIGERANT (GENERAL)

  Wear protective clothing and gloves when servicing the refrigerant of air conditioning equipment. Contact with refrigerant−filled pipes and fittings may cause severe skin burn.

- REFRIGERANT (INHALATION)

  Avoid inhalation of refrigerant. Breathing refrigerant is hazardous to personnel.

- HEARING LOSS (GENERATOR)

  Wear ear protection near the diesel generator set while in operation. Hearing loss can occur from prolonged exposure to high noise.

- HEARING LOSS (TRANSMITTER)

  Wear ear protection when transmitter center cabinet door is opened for extended periods or while tuning the klystron. Hearing loss can occur from prolonged exposure to high noise.

- PERFORM WORK EFFICIENTLY

  When working in areas designated as hazardous, perform work using the proper safety procedures. Be thoroughly familiar with the procedures required for the task before entering the area.

- SECURE ALL MATERIAL WHEN NOT IN USE

  Secure all tools, chassis, and covers before operating equipment.

- RESTORE ALL INTERLOCKS

  Restore all interlock switches to normal operating condition immediately upon completion of work on the unit involved.

- DO NOT USE METAL TOOLS NEAR EXPOSED PARTS

  Do not use brushes, brooms, or other tools that have exposed metal parts within four feet of any electrical equipment having exposed current−carrying parts.

- DO NOT USE FERROUS TOOLS OR INSTRUMENTS NEAR KLYSTRONS

  Do not use steel or iron tools near klystrons. Such tools may be pulled from the technicians grasp and may cause damage to the tube.

- SOLDERING PRECAUTIONS

  Wear a face shield or safety goggles when soldering. NOTE: Normal prescription glasses or plain safety glasses may be used in place of safety goggles for light electronic equipment soldering. Never sling excess solder from a soldering iron; wipe it off with a damp cloth or sponge. Never leave the iron plugged in and unattended. When soldering is performed, ensure work areas are well ventilated.

4. <u>SPECIFIC SAFETY PRECAUTIONS</u>.

- TOWER SAFETY

  To prevent death or severe injury from falling from the tower, the following procedures must be followed:

  - Use hand rails and rest platforms when using the stairs for access to/from Antenna areas.
  - Ensure that the Antenna floor hatch is closed and secured at all times when not in use.

- ROTATING EQUIPMENT

  Stay clear of the antenna dish during rotation. Severe injury or **DEATH** may occur from being crushed by the antenna dish.

- GROUNDING

  Equipment grounds in the transmitter cabinets must remain connected at all times while operating the WSR−88D equipment. The equipment is grounded through multiple paths and with grounds connected, the standing current on the safety ground poses no safety hazard. However, operation of the equipment with a ground disconnected may pose a potential hazard. For example, if a voltage were to short to an ungrounded chassis, personnel touching the chassis could provide a ground path for the voltage and this could result in injury or **DEATH**. Ensure that the grounds have been reconnected and that all cabinet to cabinet voltages are less than 1 volt after performing any maintenance procedure that disconnects grounds. A ground and power survey conducted by the Air Force 1839th Engineering and Installation Group and Lincoln Labs concludes that for current at the equipment "the ground currents consist of frequencies greater than 60 Hz" and that "the currents found on the ground system pose no threat to the safety of personnel working on or about the site."

- ELECTRICAL SHOCK HAZARDS

  Prime power voltages and high voltages within cabinets can cause **DEATH** or severe injury. These voltages are contained in the generator area, the Radar Data Acquisition (RDA) area and Antenna area. Warning signs and labels are located on the guards and barriers to alert personnel of the potential hazard. DO NOT DISREGARD THESE WARNINGS. Ensure that safety interlocks, barriers and guards are not bypassed.

- ELECTRICAL SHOCK HAZARDS CONT.

  In the RDA and the PUP, the CRT has extremely high voltages present that can cause **DEATH** or severe injury. The transmitter high voltage can also cause **DEATH** or severe injury. Warning labels and interlocks are present to prevent electrical shock. DO NOT BYPASS INTERLOCKS.

  The transmitter high voltage can cause **DEATH** or severe injury. Warning labels and interlocks are present to prevent electrical shock. DO NOT BYPASS INTERLOCK.

- RADIATION HAZARD

  Microwave (electromagnetic) radiation is emitted by the WSR−88D. During all operational modes while the antenna is scanning, the ANSI designated power density safety level of 5 mW/cm^2 is not exceeded anywhere. However, if the antenna is stationary with the transmitter on, power densities approaching one half of the safe level may occur within a cylindrical volume 40 ft. diameter and 600 ft. long in front of the antenna reflector. This zone is indicated by the illustration in Figure SS−1. Maintenance personnel should be aware of this condition and should point the antenna in a direction where there are no people within this zone. Refer to Figure SS−1.

- X−RAY SHIELDING

  The klystron tube produces dangerous x−radiation during operation. Exposure will occur without personnel being aware, and serious personal injury or **DEATH** may occur as a consequence at some later date. Never modify or alter the tube or other transmitter components since modifications might decrease radiation shielding.

- MAJOR EQUIPMENT DAMAGE

  Mismating electrical connectors on the RDA, RPG, or PUP can cause major equipment damage. Therefore, ensure that the connector keys/color coding is followed when reconnecting connectors during maintenance.

  Loss of (lubricant) oil, or (coolant) glycol from the generator engine could result in equipment damage. When performing maintenance, inspect for leaks and tighten fittings as needed. An automatic overtemperature shut−off switch is used to prevent damage.

  In order to satisfy an OSHA requirement relative to step height, a step has been added to the elevation housing cross member for those Limited Production sites that have aircraft warning lights. If it becomes necessary to move the antenna up passed the upper operational limit in elevation then it may become necessary to remove this step to avoid causing damage to the equipment.

- REMOVAL OF TOOLS

  Remove all tools and dropped hardware such as locknuts, washers, screws, etc., from equipment prior to restoring power to any WSR−88D equipment.

- HOIST SAFETY

  Before operating the hoist, the operator shall be familiar with all operating controls of the hoist, and shall be instructed as to warnings on the hoist and the safe hoisting practices listed in the operator's portion of the manual provided by the hoist manufacturer.

- NON−PERMIT CONFINED SPACE (ANTENNA PEDESTAL).

  The NEXRAD Safety Officer has determined the three separate entry areas of the Antenna Pedestal are confined spaces, no permit required. As applied to the NEXRAD Antenna Pedestal application, a **Confined Space** is defined as: an opening that is; (1) large enough and so configured that an employee can enter bodily and perform assigned work, (2) having a limited means of egress, (3) not designed for continuous employee occupancy. A **Non−Permit Confined Space** is defined as: a space that does **not** contain or, with respect to atmospheric hazards, have the potential to contain any hazards capable of causing **DEATH** or serious physical harm. Reference: OSHA Standards 29 CFR, Part 1910, Subpart J, 1910.146 and NWS EHB 15, Section 12.

- ANTENNA/PEDESTAL SAFETY

  Do not attempt to climb or service the pedestal assembly while the antenna is rotating and/or while the antenna servos are operating. Severe injury from moving elements may result unless all maintenance instructions and safety procedures are followed.

  The antenna/pedestal is provided with safety features and procedures to protect maintenance personnel from hazards associated with moving masses, dangerous heights, and awkward equipment access/handling positions. The safety features provided on the antenna/pedestal assembly include the following:

- Safety interlock switch
- Grab bars
- Non−skid surface(s)
- Ladder hooks
- Stow pins.

NOTE

The radome hatch is equipped with a safety interlocks. When the hatch (interlock) is opened, servo power is removed from the antenna pedestal and the transmitter high−power RF output is switched into the dummy load.

To ensure personnel safety, the following precautions must always be observed:

1. Turn off the Pedestal Electronics Power Switch at the RDA Data Processor Maintenance Panel.
2. Place SAFETY WARNING tags on the Pedestal Electronics Power ON/OFF switch on maintenance panel.
3. Ensure the transmitter is in STANDBY.
4. Place the pedestal “PWR ON/SAFE” safety interlock switch to “SAFE”.

NOTE

In some instances, the antenna must be free to move to perform maintenance or alignment procedures. In these cases when the antenna is not stowed, ensure the Pedestal Motor Power circuit breakers in the Secondary Power Distribution Panel UD7A3 (typically CB2, 4, and 6) are turned off and Lock−out/Tag−out procedures are used.

5. Engage azimuth and elevation stow pins.
6. Use riser ladder properly secured with quick release pins when climbing the pedestal to work inside azimuth portion of the pedestal.
7. Always use grab bars when climbing the antenna pedestal.
8. Use the appropriate ladder hooks for the ladder for each work area on the antenna pedestal.

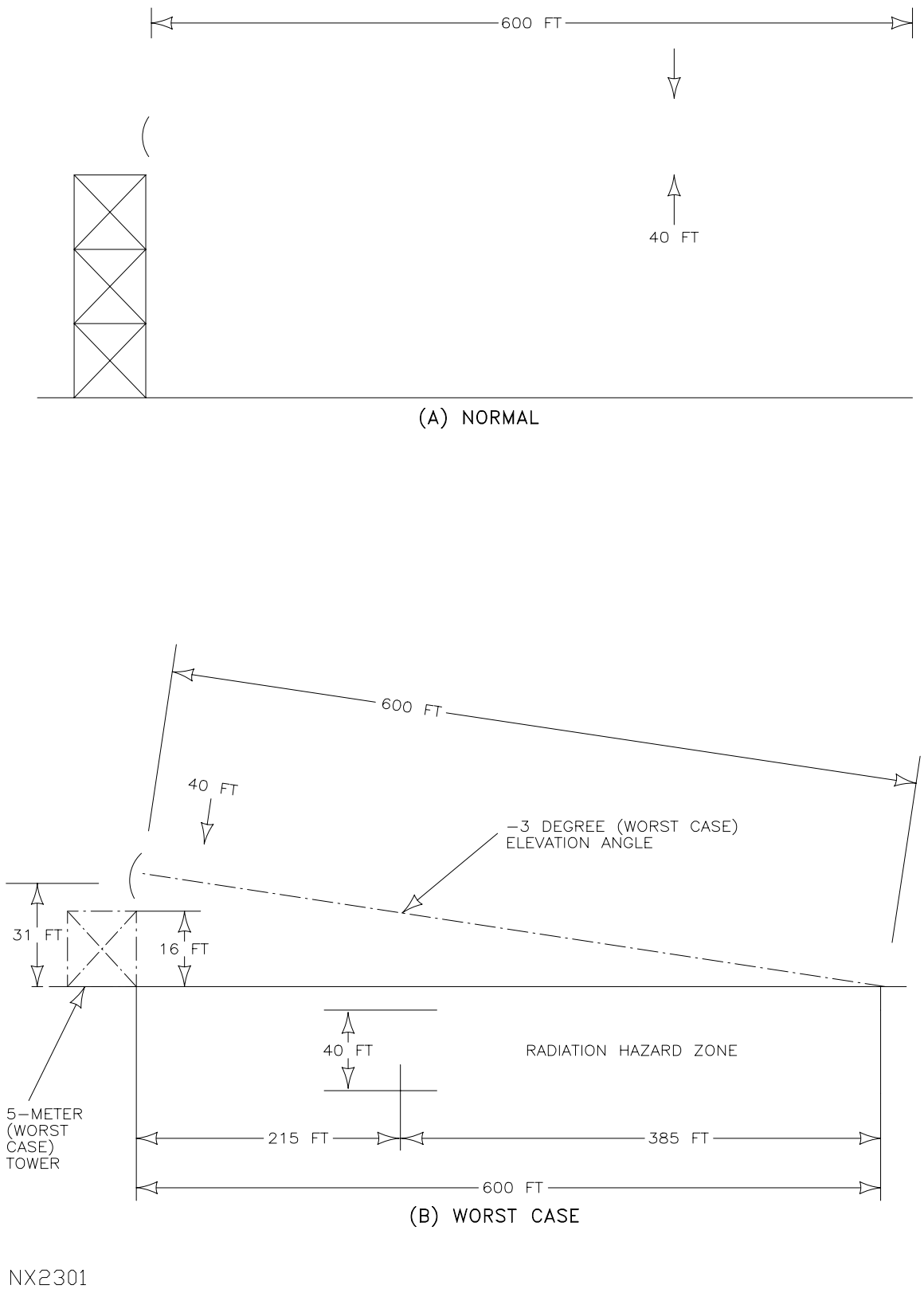

Figure SS−1. Radiation Hazard Zones

CHAPTER 1

REAL PROPERTY INSTALLED EQUIPMENT (RPIE) SYSTEM DESCRIPTION

SECTION 1−1. INTRODUCTION

1−1.1 GENERAL DESCRIPTION.

This chapter is divided into the following three sections:

- Section 1−1 Introduction
- Section 1−2 Equipment Description
- Section 1−3 System Description

The RPIE system consists of five major subsystems. These five subsystems provide the independent functions of: Power Generation and Distribution; Heating, Ventilation, and Air Conditioning (HVAC); Fire Detection; Security and Temperature Sensing; and Radome, Towers, and Shelter Support. Each major subsystem performs an essential function for the WSR−88D site. Figure 1−1 through Figure 1−7 show the RPIE major component locations.

1−1.2 POWER GENERATION AND DISTRIBUTION SUBSYSTEM.

The Power Generation and Distribution Subsystem supplies power to the generator shelter, Transition Power Maintenance Shelter (TPMS), and Radar Data Acquisition (RDA) equipment shelters power distribution panels for distribution to the RDA site equipment. This subsystem operates in the automatic mode for power generation and portions of the power distribution. Power distribution to individual equipment must be initially applied manually. The subsystem also provides data to the RDA Data Processor (RDADP). Refer to Table 1−1 for major power generation and distribution component descriptions. Major components for power generation and distribution are located in the generator shelter, Transition Power Maintenance Shelter (TPMS), RDA equipment shelter, and Microwave Line of Sight (MLOS) shelter. Each shelter consists of the following:

- Generator Shelter
  - 80 kW Diesel Generator (Onan) (Figure 1−8, 2 sheets), or 80 kW Diesel Generator (Kohler) (Figure 1−9)
  - 400 Amp Auto−Transfer Switch (Onan) (Figure 1−11)
  - 400 Amp Auto−Transfer Switch (Kohler) (Figure 1−12)
  - Power Distribution Panel (Figure 1−13)
  - Utility Disconnect Switch (Figure 1−3 or Figure 1−4)

- RDA Equipment Shelter
  - Main Power Distribution Panel (Figure 1−14)
  - Secondary Power Distribution Panel (Figure 1−15)
  - Contactor (Figure 1−15)
  - Alarm Panel (Figure 1−14)
  - Surge Suppressor (Figure 1−15)

- Transition Power Maintenance Shelter (TPMS)

  - Transition Power Source (Figure 1−10, Sheets 1 and 2)
  - Power Distribution Panel (Figure 1−16, Sheets 1 and 2)
  - Alarm Termination Box (Figure 1−18)

- Microwave Line−of−Sight (MLOS) Shelter

  - Power Distribution Panel (Figure 1−17)

1−1.3 HEATING, VENTILATION, AND AIR CONDITIONING (HVAC) SUBSYSTEM.

The HVAC subsystem provides heating and ventilation for the radome, generator shelter, RDA equipment shelter, and MLOS shelter. The subsystem also provides cooling for the RDA equipment shelter by means of two air conditioners and for the TPMS by means of a single air conditioner, except for the Type 4 sites which utilize two AC units. Some site selected air conditioners for the RDA shelter and all TPMS air conditioners are equipped with an electro−mechanical economizer. The economizer enables the air conditioner to use outdoor air to cool the shelter when the outside ambient temperature is cool enough to provide sufficient shelter cooling without running the compressor. Radome heating is controlled by a thermostat on each radome heater. Refer to Table 1−2 for major HVAC component description.

TPMS heating and cooling is provided in different configurations depending on the type of shelter.

Type 1, 2, 5, 6, and 9 shelters are equipped with a 2−ton environmental control unit (ECU) that provides both the heating and cooling functions. An automatic change−over thermostat controls these functions. This ECU also has an economizer that will provide cooling when outside temperature is within the following preset parameters. If the outside air is cooler than 58 degrees at a relative humidity of 50% or less, the economizer will lock out the mechanical compressor and mix inside and outside air to provide 50 to 58 degree air to the shelter. If the outdoor temperature or humidity are outside of these limits, the enthalpy controller will close the outside damper and activate the mechanical compressor. The compressor is locked out during economizer operation.

Type 4 shelters are equipped with two 3−ton ECUs: ECU #2 is equipped with an economizer and heater and functions as described above and ECU #1 provides a cooling function only. The two ECUs are controlled by a two stage lead−lag controller thermostat.

Major HVAC component areas are located in the radome area, generator shelter, RDA equipment shelter, Transition Power Maintenance Shelter, and MLOS shelter. Each area and shelter consists of the following:

- Radome Area
  - Motorized Damper Assembly (Figure 1−1)
  - Vent Fan Assembly (Figure 1−1)
  - Radome Heater (Figure 1−2)
- Generator Shelter
  - Intake Louver Assemblies (2) (Figure 1−3)
  - Exhaust Louver Assembly (Figure 1−3)
  - Generator Exhaust Louver Actuator (Figure 1−3)
  - Heater (Figure 1−3 or Figure 1−4)
  - Ventilation Thermostat (Figure 1−3 or Figure 1−4)
- RDA Equipment Shelter
  - Air Conditioner #1 (Figure 1−5, sheets 1 and 2 and Figure 1−19, sheet 1)
  - Air Conditioner #2 (Figure 1−5, sheets 1 and 2 and Figure 1−19, sheet 1)
  - Transmitter Vent Thermostat UD7S5 (Figure 1−5, sheets 1 and 2 and Figure 1−19, sheet 2)
  - Air Conditioner #1 and #2 Thermostat UD7S3, S4 (Figure 1−5, sheets 1 and 2 and Figure 1−19, sheet 2)
  - Motorized Intake Damper Assembly (Figure 1−5, sheets 1 and 2 and Figure 1−19, sheet 3)
  - Motorized Exhaust Damper Assembly (Figure 1−5, sheets 1 and 2 and Figure 1−19, sheet 4)
- TPMS Shelter (Type 1, 2, and 4) (Figure 1−6, Sheet 1)
  - Environmental Control Unit (ECU), 2−ton (3−ton ECUs for Type 4)
  - ECU Thermostat or Lead−Lag Controller Thermostat (Type 4)
  - Shelter High Temperature Alarm Thermostat
  - Shelter High Temperature Shutdown Thermostat
- TPMS Shelter (Type 5, 6, and 9) (Figure 1−6, sheets 2 and 3)
  - Environmental Control Unit (ECU), 2−ton
  - ECU Thermostat
  - Shelter High Temperature Alarm Thermostat
  - Shelter High Temperature Shutdown Thermostat
- MLOS Shelter (Figure 1−7)
  - Exhaust Fan with Motorized Damper Assembly
  - Intake Motorized Damper Assembly
  - 3 kW Heater
  - Ventilation Thermostat
  - Heater Thermostat

1−1.4 FIRE DETECTION SUBSYSTEM.

The Fire Detection subsystem provides fire protection for the RDA equipment shelter. The subsystem sends fire and subsystem fault alerts to the Radar Data Acquisition Data Processor (RDADP). A thermal detector provides a generator shelter alert to the RDADP when it detects a rapid increase in the shelter temperature or the generator shelter temperature exceeds 190°F. An ionization smoke detector provides a smoke alert from the MLOS shelter. The Transition Power Maintenance Shelter (TPMS) does not contain smoke or fire detection equipment. Major components for the fire detection subsystem are primarily located in the RDA equipment shelter as described in Table 1−3. A list of these components in each shelter is as follows:

- RDA Equipment Shelter
  - Fire Detection Subsystem (Figure 1−5, sheets 1 and 2), including:
    - Micro 1−EV or Junior Control Panel (Figure 1−20)
    - Manual Abort Station
    - Manual Discharge Station
    - Vibrating Alarm Horn
  - Photoelectric Smoke Detector (Figure 1−5, sheets 1 and 2)
  - Ionization Smoke Detector (Figure 1−5, sheets 1 and 2)
  - Alarm Strobe Light (Figure 1−5, sheets 1 and 2)
- Generator Shelter
  - Thermal Detector (Figure 1−3)
- MLOS Shelter
  - Ionization Smoke Detector (Figure 1−7)

1−1.5 SECURITY AND AUXILIARY SUBSYSTEM.

The Security and Auxiliary subsystem provides security, TPMS status, and environmental input data to the RDADP for the RDA site area. The TPMS status data includes the TPMS magnetic door alarms and a TPS unit alarm (generated when either the TPS is in the Bypass Mode or if the Shelter High Temperature alarm is activated). Both TPS alarm contacts are OPEN to alarm. The current RDA software only supports one TPS alarm and the TPS contact point that is monitored is the one that tracks the INVERTER ON signal of the TPS. If the inverter is on, the TPS is in the Normal operation mode and the contact is CLOSED. When it is off, the TPS will be in the Bypass mode and the contact will be OPEN. A set of normally closed contacts from the Shelter High Temperature alarm is also connected in series with the same point. Additionally, the TPS receives a signal from the Engine/Generator control circuitry when it is supplying power to the site. The environmental input data includes air temperatures and clogged filter data while security provides intrusion and aircraft warning lights input data. The security and auxiliary subsystem components are located throughout the RDA site area. Refer to Table 1−4 for major security and auxiliary component description. Major security and auxiliary subsystem components are located in the tower and radome area, RDA equipment, generator, TPMS, and MLOS shelters. Each area and shelter consists of the following:

- RDA Equipment Shelter
  - Security Panel (Figure 1−5, sheets 1 and 2)
  - Security Switch (Figure 1−5, sheets 1 and 2)
  - Magnetic Door Contact (Figure 1−5, sheets 1 and 2)
  - Air Conditioner Clogged Filter Indicator (Figure 1−19, sheet 1)
  - Transmitter Vent Clogged Filter Indicator (Figure 1−19, sheet 3)
  - Interior Air Temperature Sensor (Figure 1−19, sheet 2)
  - Exterior Air Temperature Sensor (Figure 1−5, sheets 1 and 2)
  - Air Conditioner Exhaust Air Temperature Sensor (Figure 1−5, sheets 1 and 2 and Figure 1−19, sheet 1)
  - Transmitter Vent Exhaust Air Temperature Sensor (Figure 1−19, sheet 4)
- Generator Shelter
  - Magnetic Door Contact (Figure 1−3)
  - Interior Air Temperature Sensor (Figure 1−3 or Figure 1−4)
- Tower and Radome Area
  - Magnetic Door (Gate) Contact (Figure 1−21)
  - Radome Interior Air Temperature Sensor with Transmitter (Figure 1−2)
  - Aircraft Warning Lights (Refer to NWS EHB 6−551−8)
- Transition Power Maintenance Shelter
  - Magnetic Door Contact(s) (Figure 1−6, sheets 1 through 3)
- MLOS Shelter
  - Magnetic Door Contact (Figure 1−7)

1−1.6 RADOME, TOWERS, AND SHELTER SUPPORT SUBSYSTEM.

The Radome, Towers, and Shelters Support Subsystem provides environmental protection for the major RPIE subsystems and RDA Doppler Meteorological Radar WSR−88D equipment. Further, operational power, security, and fire detection and prevention are provided for the RDA site equipment. Refer to Table 1−5 for the support subsystem characteristics.

Table 1−1. RPIE Major Power Generation and Distribution Component Description

Item	Component	Description
1	80 kW Engine/Generator UD10M1/UD10G1	a. Provides 120/208 Vac backup power for the RDA site equipment. b. Provides for remote control and generator fault monitoring. c. Has power disconnect switch for safety and local operation. d. Provides power distribution control panel for local control and monitoring.
2	400 Amp Auto−Transfer Switch UD10A1	a. Provides a method to automatically transfer the load to backup or utility power without operator involvement. b. Senses the interruption of utility power source. c. Sends start signal to generator set. d. Transfers the load to the backup power source. e. Upon command transfers the load back to utility power. f. Sends stop signal to the generator set.
3	Generator Shelter Power Distribution Panel UD10A2	Provides power distribution to the generator shelter equipment.
4	Transition Power Source (TPS) UD62	Provides 208 Vac power to the RDA critical load and maintains power supply to RDA during change over from utility to generator.
5	TPMS Shelter Power Distribution System Panel UD60A5	a. Provides power distribution to the TPMS auxiliary equipment. b. Receives 208 Vac power from the Main Power Distribution Panel.
6	100 Amp Maintenance Bypass Fused Disconnect UD61A5S2 (Type 1 and 2 TPMS) 200 Amp for Type 4 TPMS	Provides means to manually bypass TPS.
7	200 Amp Input Fused Disconnect UD61A5S1 (Type 1, 2, and 4 TPMS)	Provides means to isolate power to the TPS input.

Table 1−1. RPIE Major Power Generation and Distribution Component Description − Continued

Item	Component	Description
8	100 Amp Output Fuse Disconnect UD61A5S3 (Type 1, 2, and 4 TPMS)	Provides means to isolate power to the TPS output.
9	Utility Disconnect Switch UD10S1	Provides for manual control of utility power application.
10	200 Amp Fused Disconnect UD10TPS1	Provides 208 Vac power from the Auto−Transfer Switch to the Transition Power Source. Provides means to isolate all power to Transition Power Source and to RDA critical load.
11	RDA Equipment Shelter Main Power Distribution Panel UD7A2	a. Receives 120/208 Vac from the automatic transfer switch. b. Provides Vac power to RPIE equipment. c. Provides three−phase power to the TPMS Power Distribution Panel.
12	RDA Equipment Shelter Contactor UD7S6	a. Receives three−phase power from the TPS unit via Output Fused Disconnect UD61A5S3 (Type 1, 2, and 4) or TPS unit via Maintenance Bypass Module Cabinet (Type 5, 6, and 9) b. Passes three−phase power to the Secondary Power Distribution Panel when the power source provides good (valid) power to the Auto−Transfer Switch.
13	RDA Equipment Shelter Secondary Power Distribution Panel UD7A3	a. Receives 120/208 Vac from the Magnetic Contactor. b. Provides Vac power to WSR−88D RDA site major equipment.
14	Battery Cabinet UD63	Contains 40 batteries used to supply the TPS inverter when utility or site generator power is not available.

Table 1−1. RPIE Major Power Generation and Distribution Component Description − Continued

Item	Component	Description
15	Maintenance Bypass Module UD64 (Installed in Type 5 and later TPMS shelters)	The module replaces the three fused disconnects installed in Type 1, 2, and 4 TPMS that were used to route power to, from, and around the TPS. The module contains three breakers to perform the same function.
16	Supervisory Contact Module UD65	Module has proper contact amperage capacity to provide power from the TPS to the critical equipment contactor during changeover from utility to generator.

Table 1−2. RPIE Major Heating, Ventilation, and Air Conditioning Component Description

Item	Component	Description
1	Radome Motorized Damper Assembly UD11A1	When energized, provides for exhaust ventilation.
2	Radome Vent Fan Assembly UD11A2	When operating, provides intake air ventilation.
3	Radome Heater(s) UD2HR1−HR3	Zero to three, depending on geographical area, are located on Antenna Pedestal.
4	Generator Shelter Intake Damper Assemblies UD10A4 and 10A5	Provides fresh air ventilation as required.
5	Generator Shelter Exhaust Damper Assembly UD10A11	Provides air exhaust as required.
6	Generator Exhaust Damper Assembly UD10A3	Provides generator exhaust assembly for hot air removal.
7	Generator Shelter Heater UD10HR1	Provides generator shelter heat to maintain minimum temperature of +50°F.
8	Generator Shelter Ventilation Thermostat UD10S2	Provides automatic control of the generator shelter venting circuitry.
9	RDA Air Conditioner(s) UD7AC1, AC2	a. Provides cooling to maintain maximum temperature of +85°F. b. Provides heating to maintain minimum temperature of +50°F.
10	Transmitter Vent Thermostat UD7S5	Provides control for the transmitter venting to use inside or outside air for transmitter cooling.
11	RDA Equipment Shelter Intake Damper Assembly (Motorized) UD7A9	Provides transmitter cooling using inside or outside air.
12	RDA Equipment Shelter Exhaust Damper Assembly (Motorized) UD7A10	Provides transmitter exhaust air venting into RDA equipment shelter or exhausting (vent) to the outside.
13	Air Conditioner #1 or #2 Thermostat UD7S3, S4	Provides control of RDA equipment shelter air conditioners.

Table 1−2. RPIE Major Heating, Ventilation, and Air Conditioning Component Description − Continued

Item	Component	Description
14	Air Conditioner #2 Two−Stage Thermostat UD7S4. Cold Weather Selected Sites.	Provides control of RDA equipment shelter air conditioner equipped with one Economizer to enable use of outside ambient air cooling with compressor shutdown.
15	MLOS Shelter Exhaust Fan/With Motorized Damper Assembly UD13B1	Provides exhaust air ventilation to maintain desired temperature within the MLOS shelter.
16	MLOS Shelter Intake Motorized Damper Assembly UD13A3	Provides intake vents for exterior air.
17	MLOS Shelter Ventilation Thermostat UD13S2	Provides control of the MLOS ventilation system.
18	MLOS Shelter 3.0 kW Heater UD13HR1	Provides MLOS shelter heat to maintain a minimum temperature of +50°F.
19	MLOS Shelter Heater Thermostat UD13S1	Provides temperature control for the MLOS shelter heater.
20	Environmental Control Unit UD60A11, UD60A12, UD60A15, or UD60A16	Provides temperature control for the TPMS shelter.
21	ECU Thermostat UD60A14 or Lead−Lag Controller Thermostat UD60A14−1	Provides control of TPMS ECU(s).

Table 1−3. RPIE Major Fire Detection and Suppression Component Description

Item	Component	Description
1	Micro 1 EV or Junior Control Panel UD7A5	Uses a microprocessor to provide a hazard control unit for activation of the Fire Detection System. It has self−diagnostic circuitry to maintain system integrity.
2	Manual Abort Station UD7A7	Lets the user suspend discharge of the fire protection system. This station switch is no longer used.
3	Manual Discharge Station UD7A6	Provides a method for manually activating the fire protection system and will cause all shelter power to be shut off.
4	Photoelectric Smoke Detector UD7A17	Works on the light scatter principle. It contains an alarm LED which is illuminated only when an alarm condition exists.
5	Ionization Smoke Detector UD7A23	Contains a smoke sensing element with sampling and reference chambers. It has an LED which provides a positive indication of an alarm condition.
6	Vibrating Alarm Horn UD7A4	Emits a piercing alarm when activated by the Fire Detection System.
7	Alarm Strobe Light UD7DS1	Provides a visual signal which is a three−dimensional strobe light. The strobe light flashes when the fire control panel activates the light.
8	Thermal Detector UD10A8	Contains a temperature sensing device which recognizes rapid rising temperature and provides notification of rapid rising temperature or temperature exceeding 190°F.
9	Portable Fire Extinguisher UD7A13, UD10A10, and UD13A5	Used to manually suppress a fire when the fire detection system issues an alarm.

Table 1−4. RPIE Major Security and Auxiliary Component Description

Item	Component	Description
1	Security Panel UD7A12	Provides a method to check the intrusion alarms and security system.
2	Magnetic Door Contact UD7S1, UD10S3, UD11S1, UD13S3, UD60A6A1, UD60A6A2, UD60A6A3	Provides the contacts and method to initiate an intrusion alarm.
3	Clogged Filter Indicator UD7A14, UD7A15, UD7A16	Provides a visual and alarm indication for clogged (dirty) air filters.
4	Air Temperature Sensor, Interior UD7A20, UD10A7, UD2A10	Provides inside shelter/radome temperature data to the RDADP.
5	Air Temperature Sensor, Exhaust UD7A18, UD7A19, UD7A21	Provides exhaust air temperature data to the RDADP.
6	Air Temperature Sensor, Exterior UD7A22	Provides exterior (outside) temperature data to the RDADP.
7	Aircraft Warning Light Assembly UD12A1	Provides aircraft warning lights at selected sites.
8	Radome Entry Door Contact Switch UD11S2	Provides the contacts and method to prevent radiating while the door is open. (Personnel should close the hatch once inside the radome and place the pedestal PWR ON/SAFE safety interlock switch in the SAFE position.)
9	Alarm Termination Panel UD7A1	Routes analog and discrete status monitoring data to DAU.
10	Alarm Termination Panel UD60A6	Routes TPMS door alarm status and TPS alarm status to RDA via generator shelter Alarm Termination Panel. Only TPS alarm supported by RDA software is “Inverter On”.
11	TPMS Shelter High Temperature Alarm Thermostat UD60A3A1	Thermostat opens on increasing temperature at 80°F and initiates a “TPS OFF’ signal to the RDA. Alarm alerts operator of a degraded condition. TPS remains operating.

Table 1−4. RPIE Major Security and Auxiliary Component Description − Continued

Item	Component	Description
12	TPMS Shelter High Temperature Shutdown Thermostat UD60A2A8	Thermostat contact closes on increasing temperature at 90°F and initiates a TPS transfer to BYPASS mode and shuts down. Cause of shutdown is displayed on TPS Monitor Panel.
13	TPMS Hydrogen Detector UD60A10	Detector initiates an audible alarm on increasing hydrogen gas content at 1% and closes a contact to open the HVAC economizer damper to 50%. If hydrogen concentration continues to increase, at 2%, a contact will close and TPS transfers to BYPASS mode and shuts down. Cause of shutdown is displayed on TPS Monitor Panel.

Table 1−5. Radome, Towers, MLOS Antenna and Shelter Characteristics

	Characteristics/Feature	Value/Description		
1	Radome			
	Diameter	Outside 38′ 8″		
		Inside 38′ 6.2″		
	Height	Outside 34′ 9.6″		
		Inside 34′ 8.7″		
	Base Diameter	23′ 2.4″		
	Weight	5700 Pounds		
	Average Panel Weight	86 Pounds		
	Number of Panels	Major Panels 56		
		Base Panels 10		
	Design Criteria	Wind Velocity 60m/sec (134 mph)		
		Temperature −62°C to +60°C		
		Elevation Operation 0 to 3000m		
	Aircraft Warning Lights	Two lamp aircraft warning light assembly is mounted on Radome zenith path.		
2	RDA Equipment Shelter			
	Length	Inside 17′ 3″		
		Outside 18′ 0″		
	Width	Inside 9′ 0″		
		Outside 10′ 3″		
	Height	Inside 9′ 3″		
		Outside 11′ 6″		
	Transportable	By surface, air, or sea		
	Movable	By crane		
	Insulation	Roof R19		
		Walls R11		
		Floor R11		
	Temperature/Humidity	Min	Max	Humidity
	• Operating	−40°C	+49°C	15−100%
	• Non−Operating	−62°C	+60°C	15−100%
	Security	Provides remote intrusion alarm		
	Fire Protection System	Smoke detector with remote alarm and a portable fire extinguisher		

Table 1−5. Radome, Towers, MLOS Antenna and Shelter Characteristics − Continued

	Characteristics/Feature	Value/Description
2	RDA Equipment Shelter − Cont.	
	Environmental Control	Air Conditioning Venting Heating
	Reliability	Air Conditioning MTBF 60,000 Hrs. Power Distribution MTBF 100,000 Hrs.
	Rainfall	
	• Operational	Operate during an instantaneous rain rate to 300 mm per hour with a maximum wind speed to 18 meters per second.
	• Non−Operational	Survive in a non−operational rainfall environment of: a. One hour average rain rate of 130 mm per hour and wind speed of 33 meters per second. b. A 24 hour average rain rate of 18 mm per hour with a maximum wind speed of 21 meters per second.
	Security	Provides remote alarm
3	RDA/RPG Equipment Shelter	
	Length	Inside 22′ 3.5″ Outside 24′ 6″
	Width	Inside 9′ 5″ Outside 10′ 3″
	Height	Inside 9′ 6″ Outside 10′ 6″
	NOTE Except for the above characteristics, the remaining characteristics and features for this shelter are the same as for the RDA shelter. Refer to item 2 for this information.	
4	Generator Shelter	
	Length	Inside 14′ 6″ Outside 15′ 2″
	Width	Inside 9′ 0″ Outside 10′ 3″

Table 1−5. Radome, Towers, MLOS Antenna and Shelter Characteristics − Continued

	Characteristics/Feature	Value/Description		
4	Generator Shelter − Cont.			
	Height	Inside 8′ 6″		
		Outside 9′ 7″		
	Transportable	By surface, air, or sea		
	Movable	By crane		
	Insulation	Roof R19		
		Walls R11		
		Floor R11		
	Temperature/Humidity	Min	Max	Humidity
	• Operating	−40°C	+49°C	15−100%
	• Non−Operating	−62°C	+60°C	15−100%
	Rainfall			
	• Operating	Operate during an instantaneous rain rate to 300 mm per hour with a maximum wind speed to 18 meters per second.		
	• Non−Operating	Survive in a non−operational rainfall environment of: a. One hour average rain rate of 130 mm per hour and wind speed of 33 meters per second. b. A 24 hour average rain rate of 18 mm per hour with a maximum wind speed of 21 meters per second.		
	Security	Provides remote intrusion alarm		
	Fire Detection System	Contains a temperature sensing device which recognizes rapid rising temperature and provides notification of rapid rising temperature or temperature exceeding 190°F.		
	Fire Protection	Is a 9 pound portable fire extinguisher.		
	Fuel System	Has storage with a fuel level monitoring device.		
5	MLOS Site Shelter			
	Length	Inside 8′ 0″		
		Outside 9′ 3″		
	Width	Inside 6′ 8″		
		Outside 7′ 11″		

Table 1−5. Radome, Towers, MLOS Antenna and Shelter Characteristics − Continued

	Characteristics/Feature	Value/Description		
5	MLOS Site Shelter − Cont.			
	Height	Inside 8′ 6″		
		Outside 9′ 8″		
	Transportable	By surface, air, or sea		
	Movable	By crane		
	Insulation	Roof R19		
		Walls R11		
		Floor R11		
	Temperature/Humidity	Min	Max	Humidity
	• Operating	−40° C	+49°C	15−100%
	• Non−Operating	−62°C	+60°C	15−100%
	Security	Provides remote intrusion alarm.		
	Fire Protection System	Is a smoke detector with remote alarm and a 9 pound portable fire extinguisher.		
	• Operating	Operate during an instantaneous rain rate to 300 mm per hour with a maximum wind speed to 18 meters per second.		
	• Non−Operating	Survive in a non−operational rainfall environment of: a. One hour average rain rate of 130 mm per hour and wind speed of 33 meters per second. b. A 24 hour average rain rate of 18 mm per hour with a maximum wind speed of 21 meters per second.		
6	Steel Tower			
	Height	Variable 5 meters to 30 meters in 5 meter increments.		
	Radome Mounting Base	On top of the tower.		
	Deflections − Elevation	Elevation rotation deflection not to exceed 0.2 degrees at 25 meters per second wind velocity or 0.75 degrees at 50 meters per second wind velocity.		

Table 1−5. Radome, Towers, MLOS Antenna and Shelter Characteristics − Continued

	Characteristics/Feature	Value/Description
6	Steel Tower − Cont.	
	Deflections − Azimuth	Azimuth rotation deflection not to exceed 0.2 degrees at 25 meters per second wind velocity or 0.75 degrees at 50 meters per second wind velocity.
	Pedestal Mounting Surface Velocity	Velocity of the pedestal mounting surface is less than two (2) meters per second at wind gusts up to 25 meters per second velocity.
	Load	Supports a load up to 23,000 pounds.
	Temperature/Humidity	Min / Max / Humidity
	• Operating	−40°C / +49°C / 15−100%
	• Non−Operating	−62°C / +60°C / 15−100%
	Rainfall	
	• Operating	Operate during an instantaneous rain rate to 300 mm per hour with a maximum wind speed to 18 meters per second.
	• Non−Operating	Survive in a non−operational rainfall environment of: a. One hour average rain rate of 130 mm per hour and wind speed of 33 meters per second. b. A 24 hour average rain rate of 18 mm per hour with a maximum wind speed of 21 meters per second.
	Wind	Withstand steady wind or gust up to 60 meters per second in operational and non−operational conditions.
	Lightning Protection	Provides lightning conductor ring with down leads along each leg of tower to grounding. Refer to Figure 1−1 or NWS EHB 6−551−8, Section 4 paragraph 4−2.
	Radome Venting	Provides two openings and devices to vent the Radome. One opening has vent fan and the other opening houses motorized damper.
7	MLOS Site Antenna Tower	Provides support for MLOS antenna and aircraft warning lights when required.
8	MLOS Site Antenna	Provides the capability to receive and/or transmit MLOS radio signals.

Table 1−5. Radome, Towers, MLOS Antenna and Shelter Characteristics − Continued

	Characteristics/Feature	Value/Description		
9	Transition Power Maintenance Shelter			
	Length	Inside 23′ 3″		
		Outside 24′ 0″		
	Width	Inside 11′ 3″		
		Outside 12′ 0″		
	Height	Inside 8′ 3″		
		Outside 9′ 3″		
	Weight	55,300 pounds		
	Transportable	By surface, air, or sea		
	Movable	By crane		
	Insulation	R18		
	Temperature/Humidity	Min	Max	Humidity
	• Operating	−40°C	+49°C	5−90%
	• Non−Operating	−40°C	+60°C	5−90%
	Rainfall	Operate during an instantaneous rain rate of 300 mm per hour with a maximum wind speed of 18 meters per second.		
	Snow and ice loading	235 kilograms per square meter.		

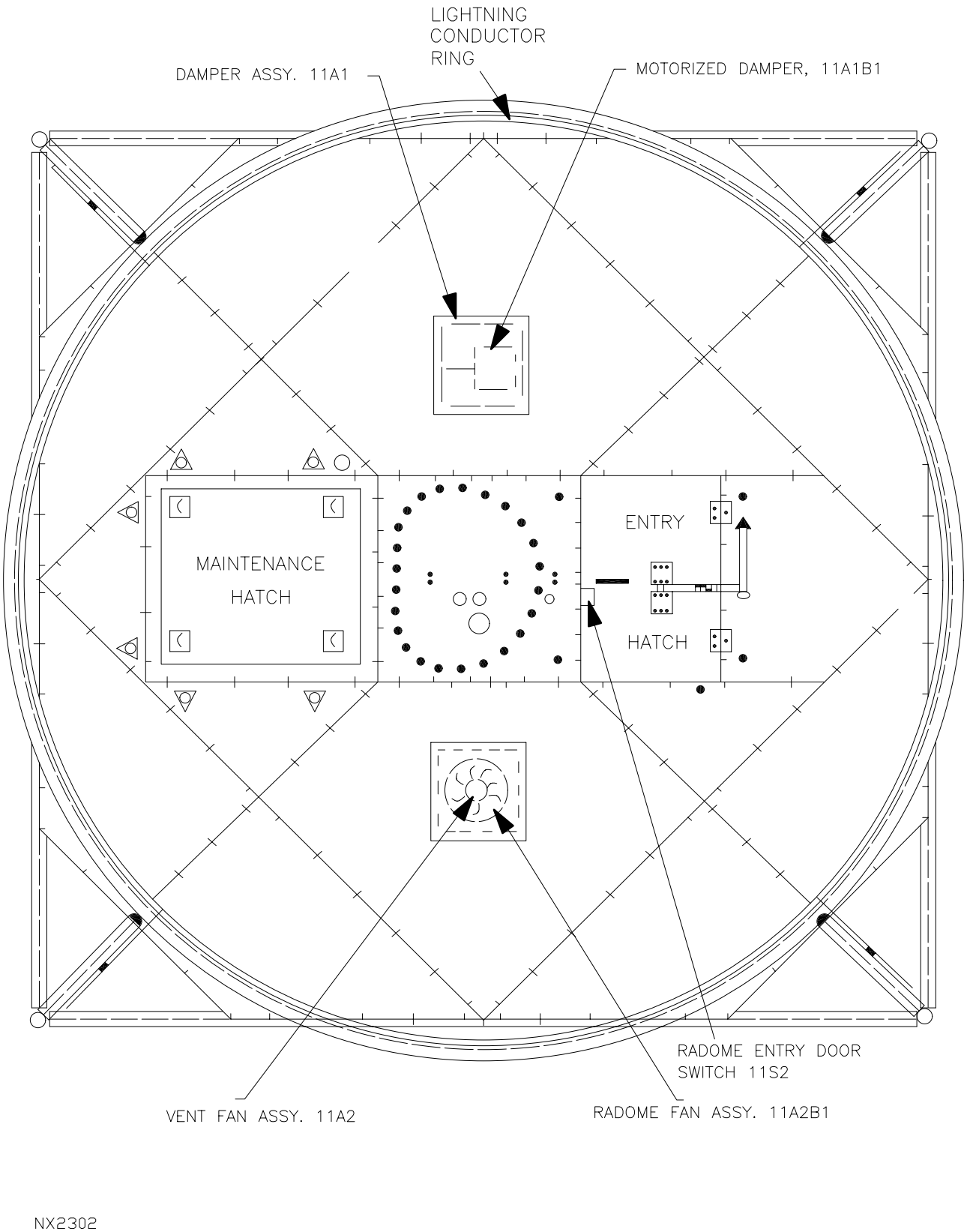

Figure 1−1. Antenna Radome Deck RPIE Component Layout

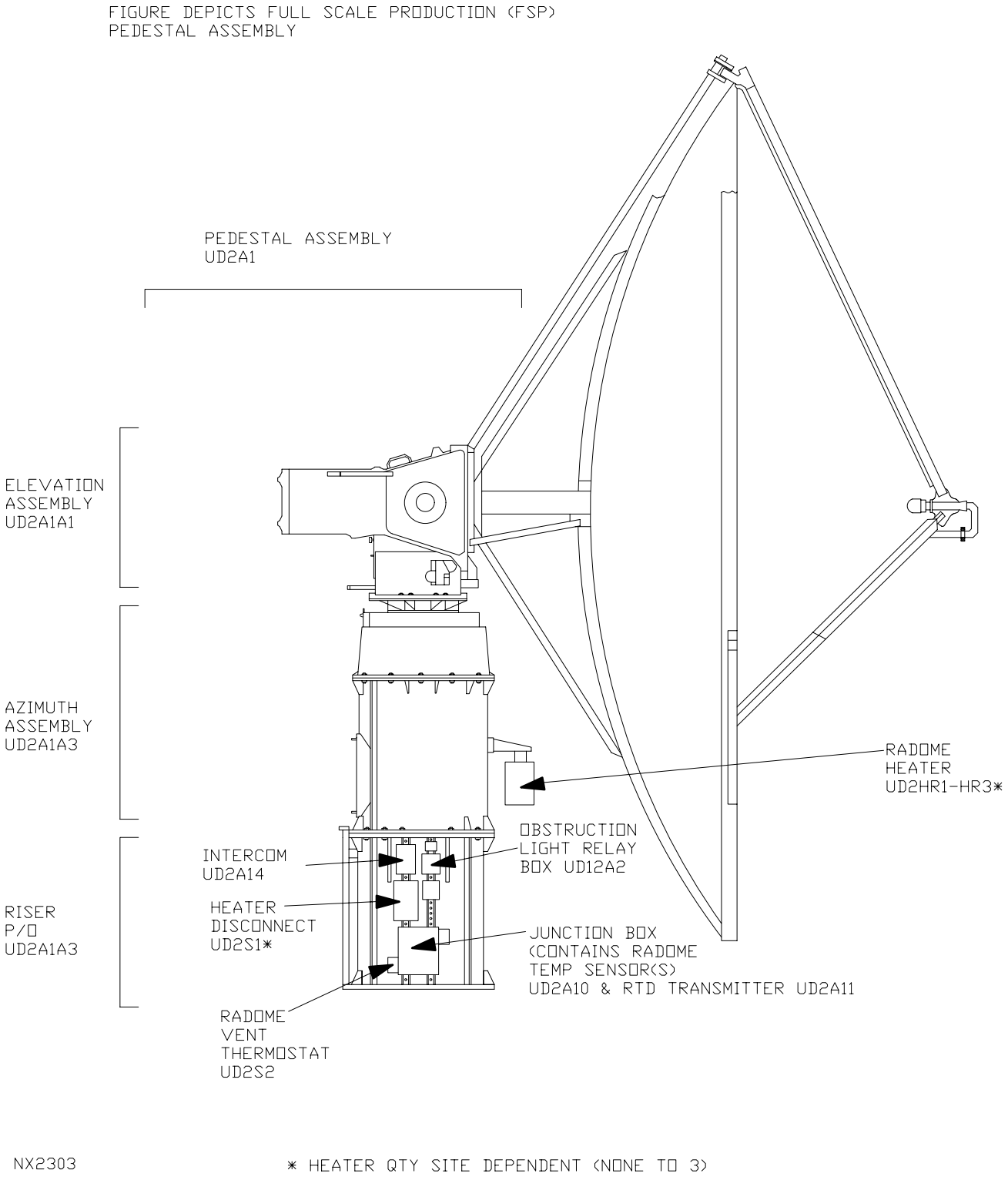

Figure 1−2. Antenna Pedestal RPIE Component Layout

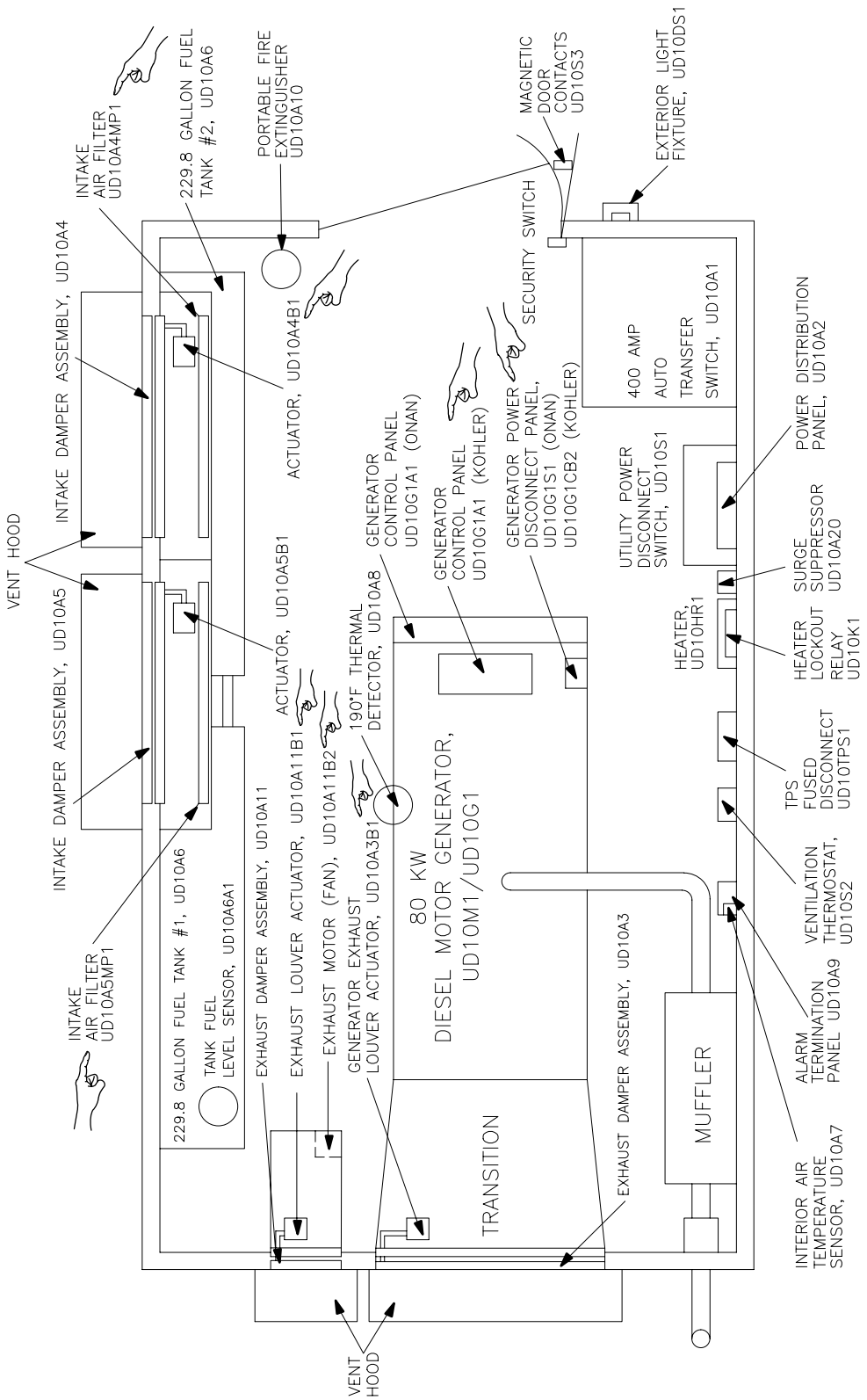

Figure 1−3. RDA Generator Shelter, UD10, Configuration

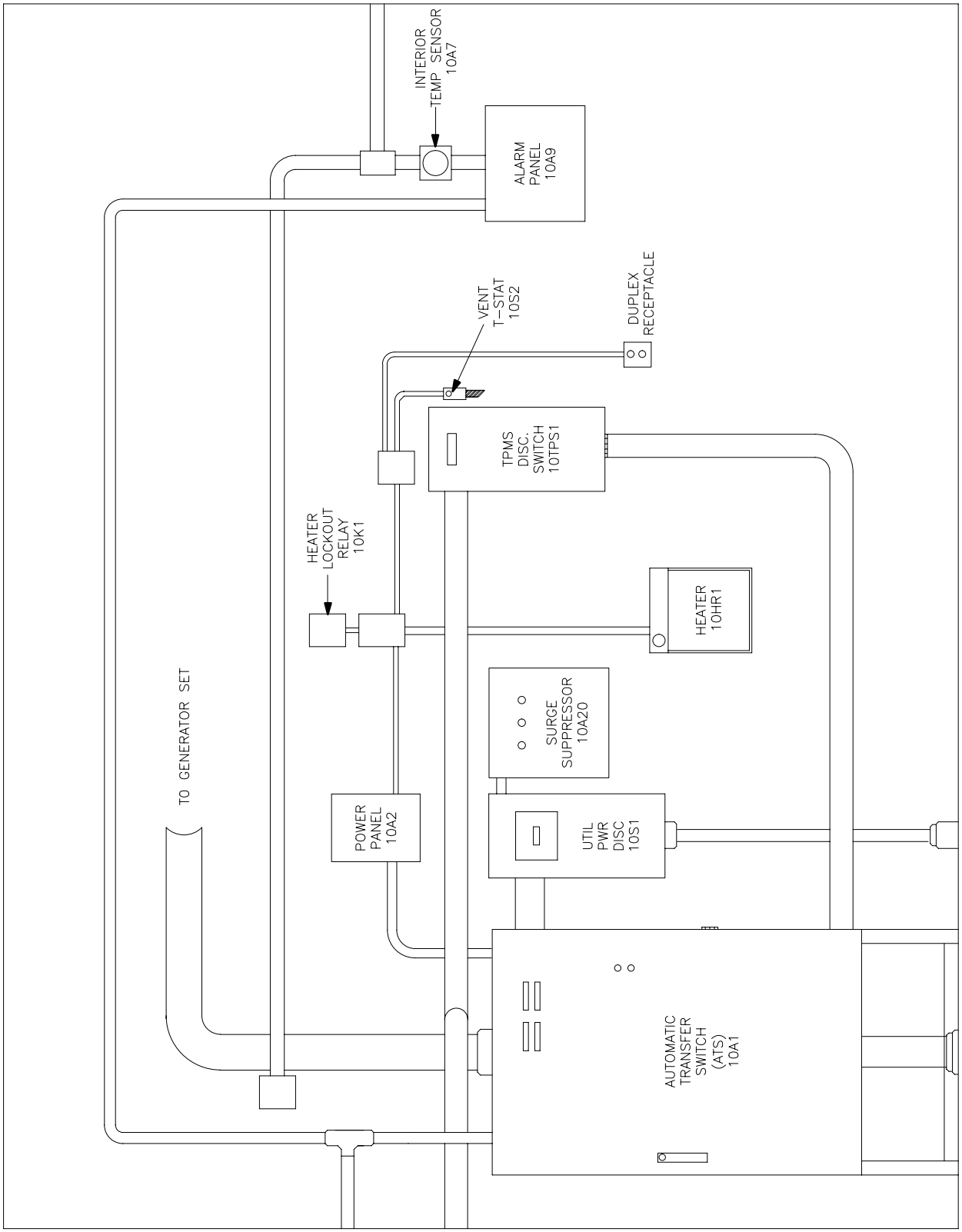

Figure 1−4. RDA Generator Shelter Equipment Layout UD10, Configuration

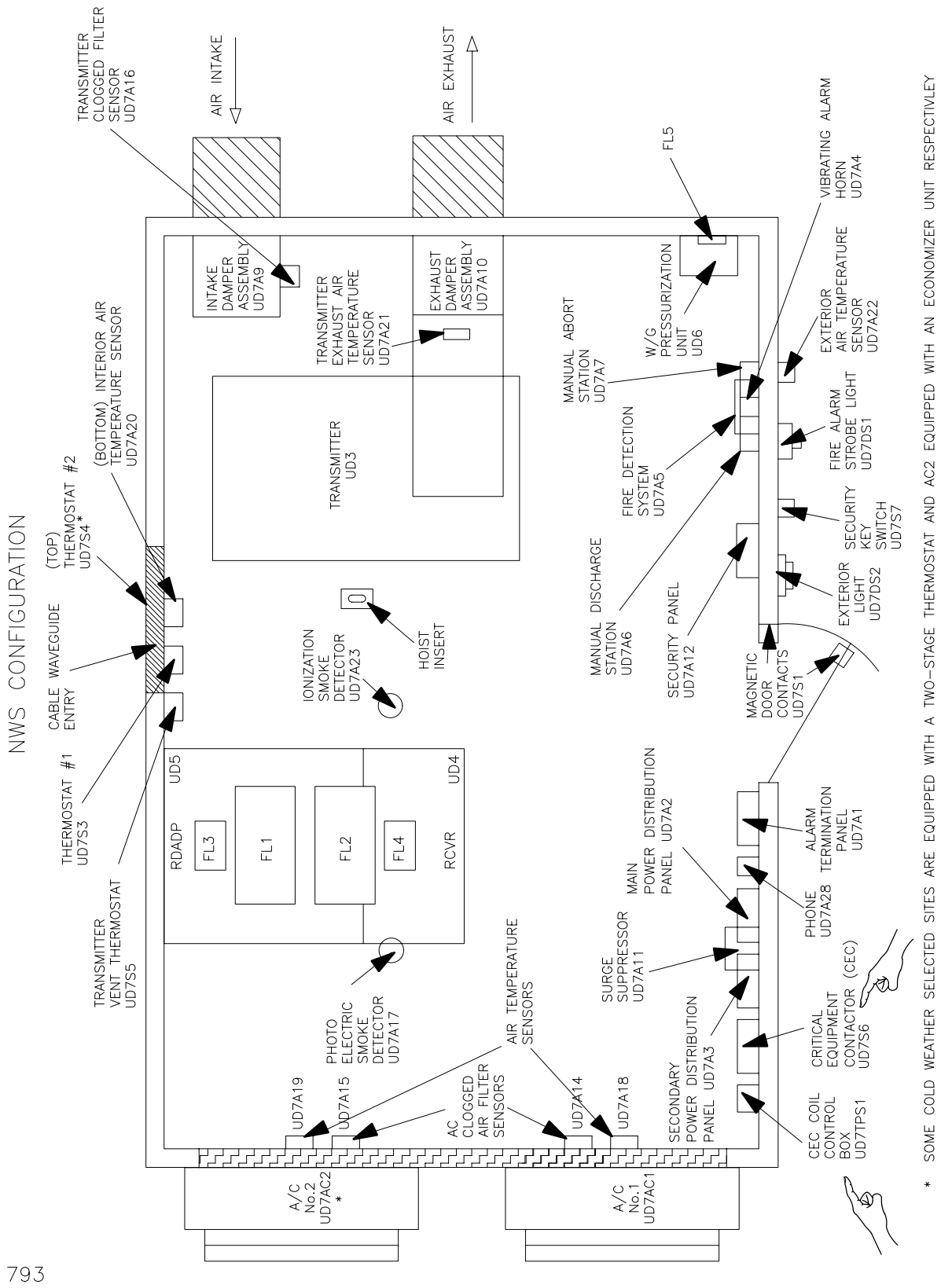

Figure 1−5. RDA Equipment Shelter Configuration (NWS) (Sheet 1 of 2)

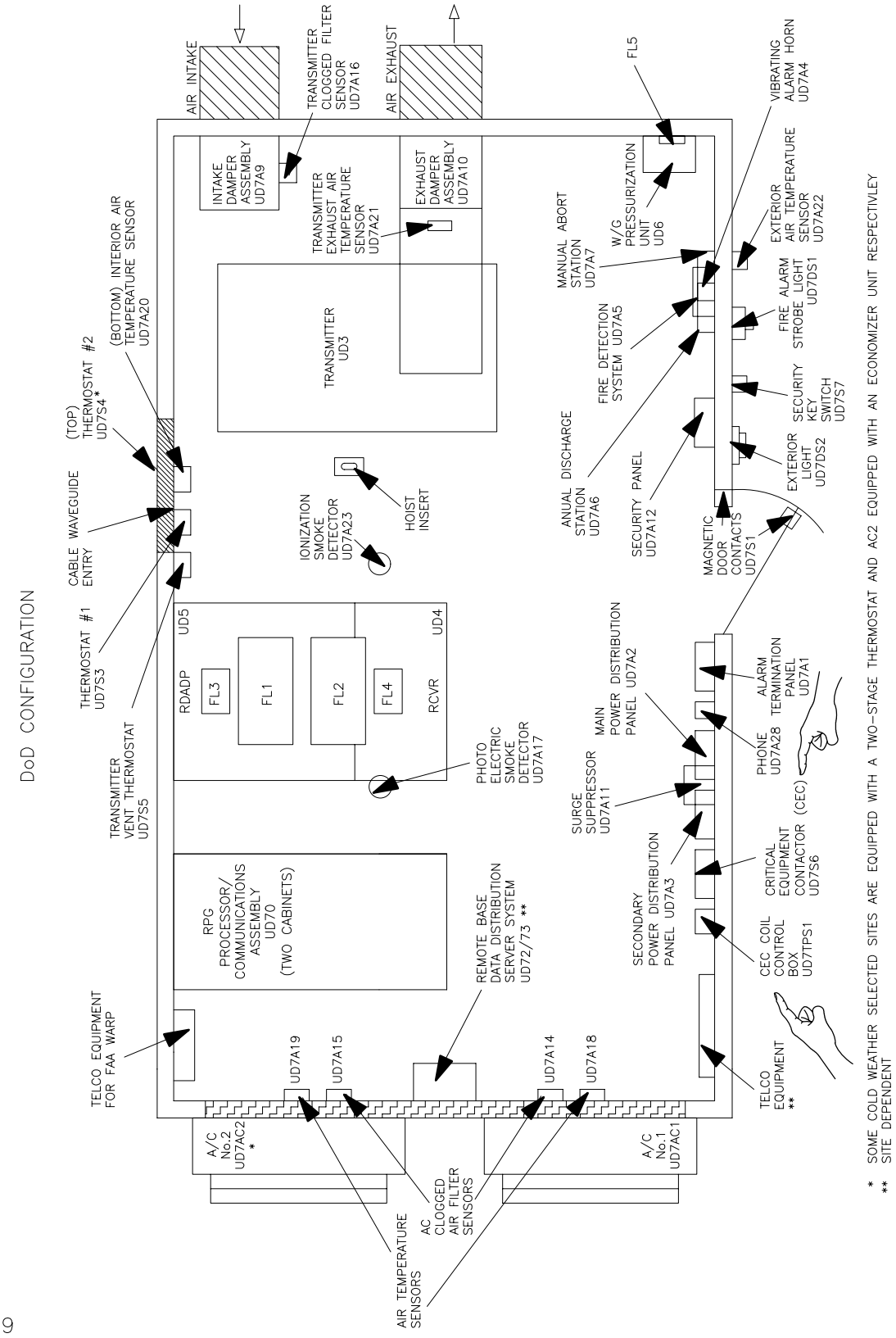

Figure 1−5. RDA Equipment Shelter Configuration (DoD) (Sheet 2 of 2)

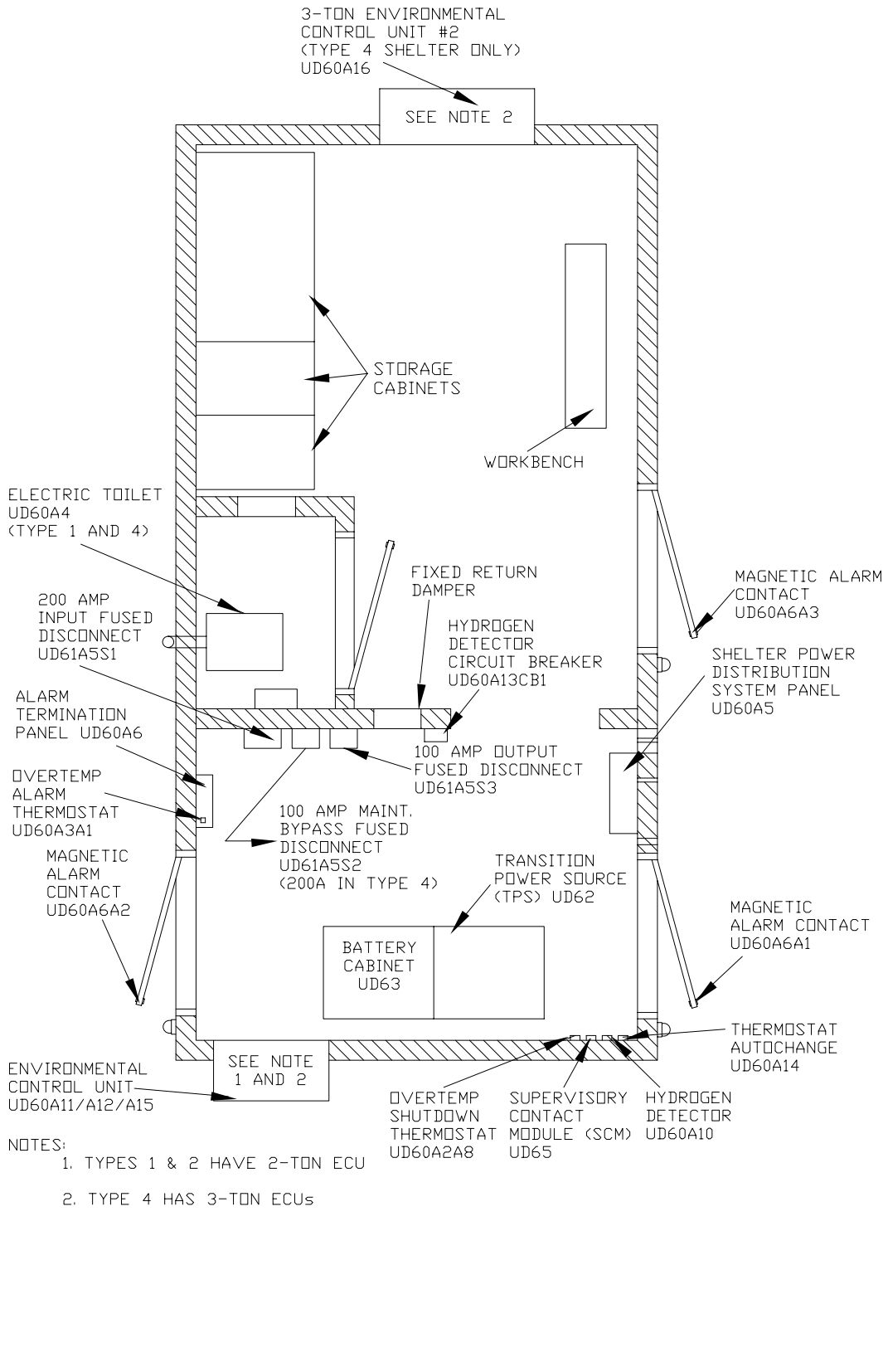

Figure 1−6. Transition Power Maintenance Shelter Configuration (Type 1, 2, and 4) (Sheet 1 of 3)

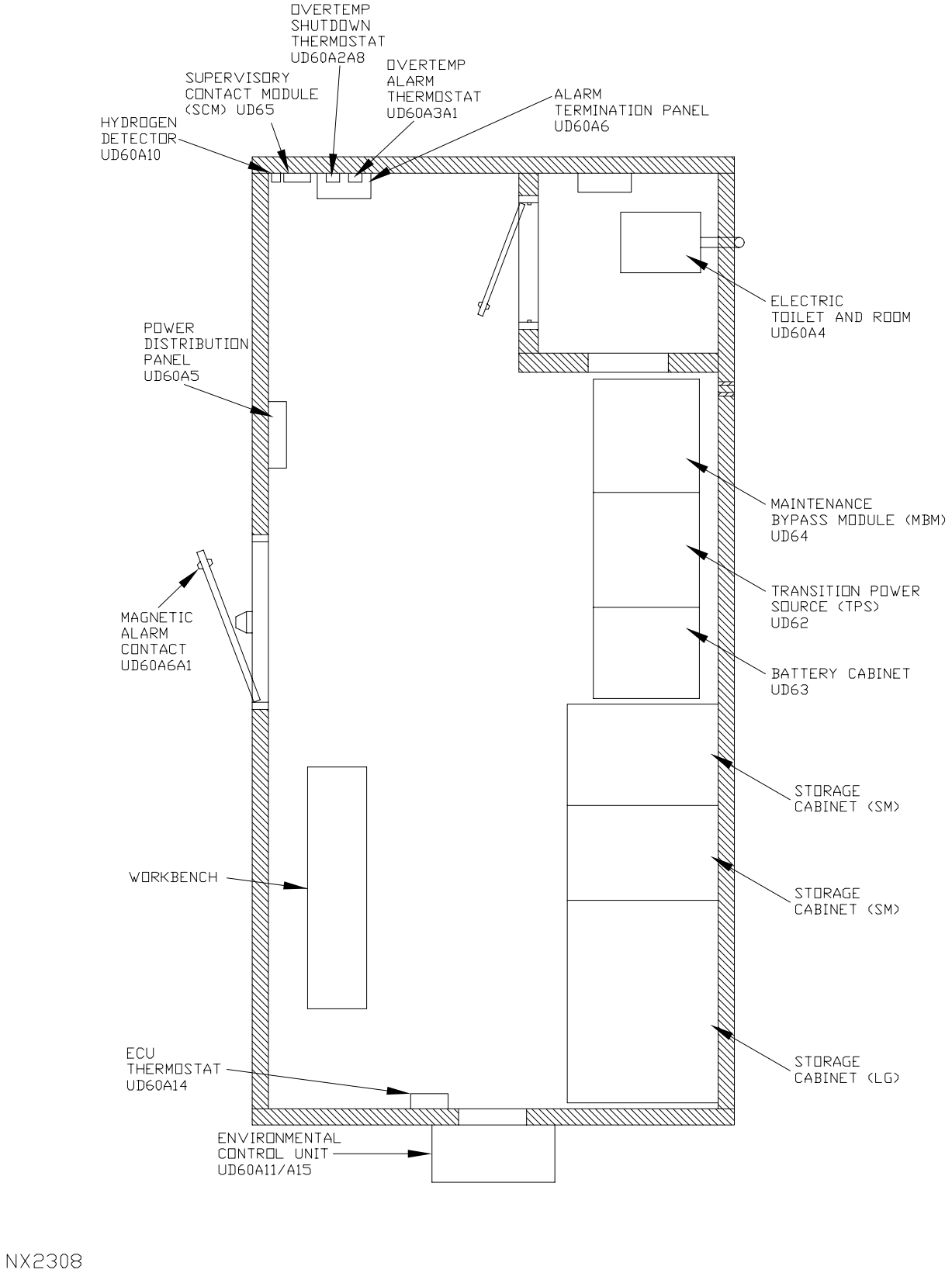

Figure 1−6. Transition Power Maintenance Shelter Configuration (Type 5 and 9) (Sheet 2 of 3)

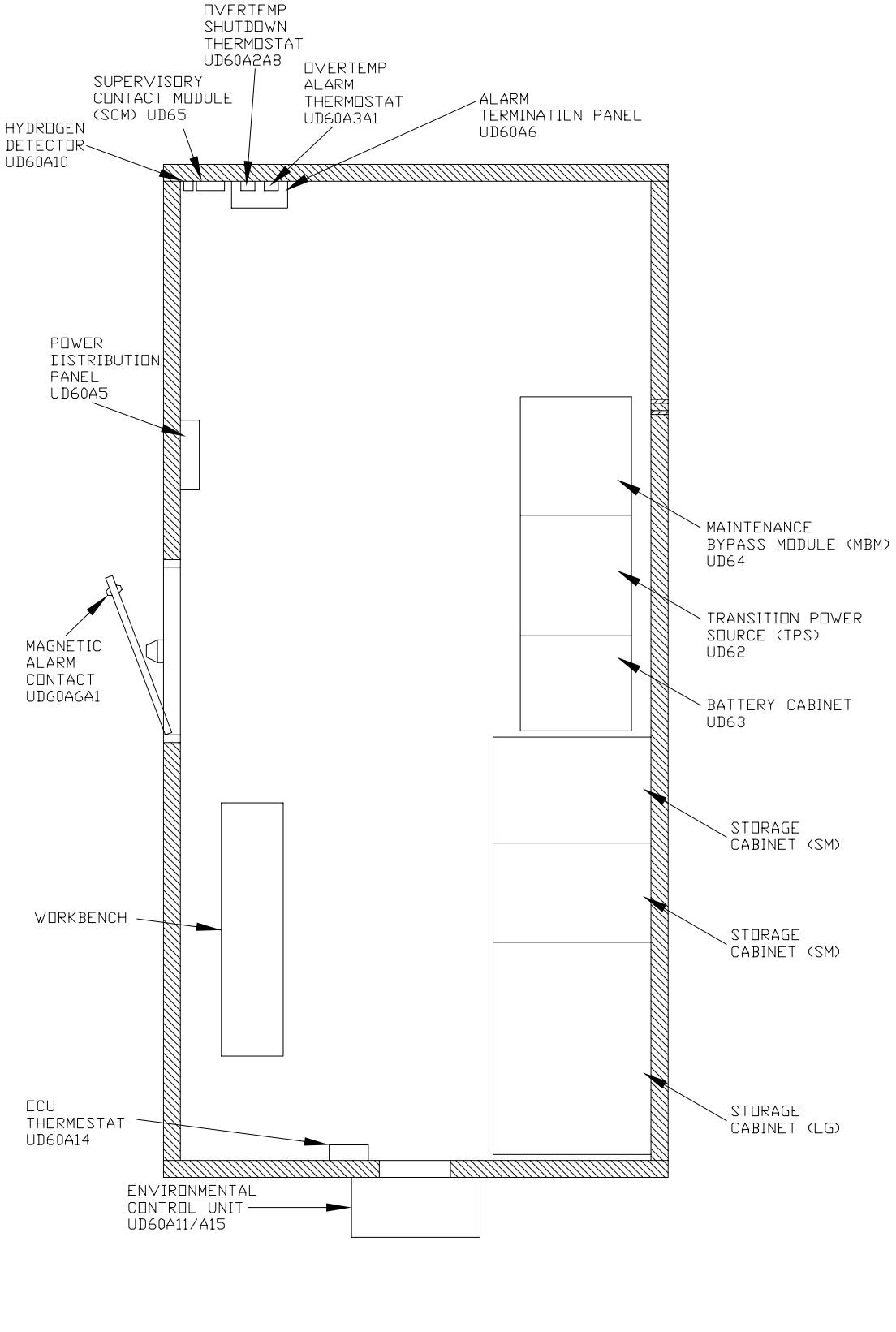

Figure 1−6. Transition Power Maintenance Shelter Configuration (Type 6)
(Sheet 3 of 3)

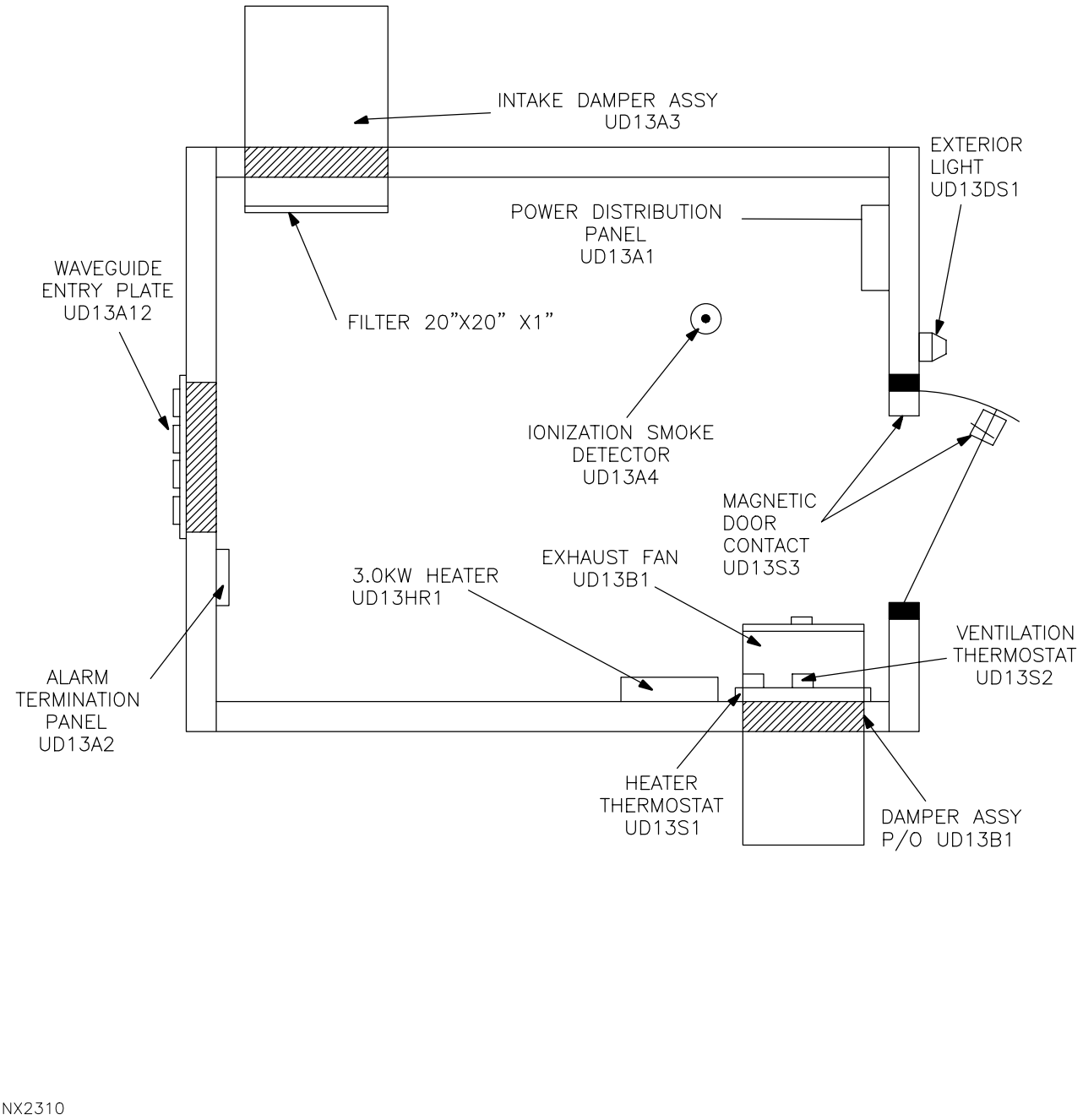

Figure 1−7. MLOS Shelter UD13 RPIE Configuration

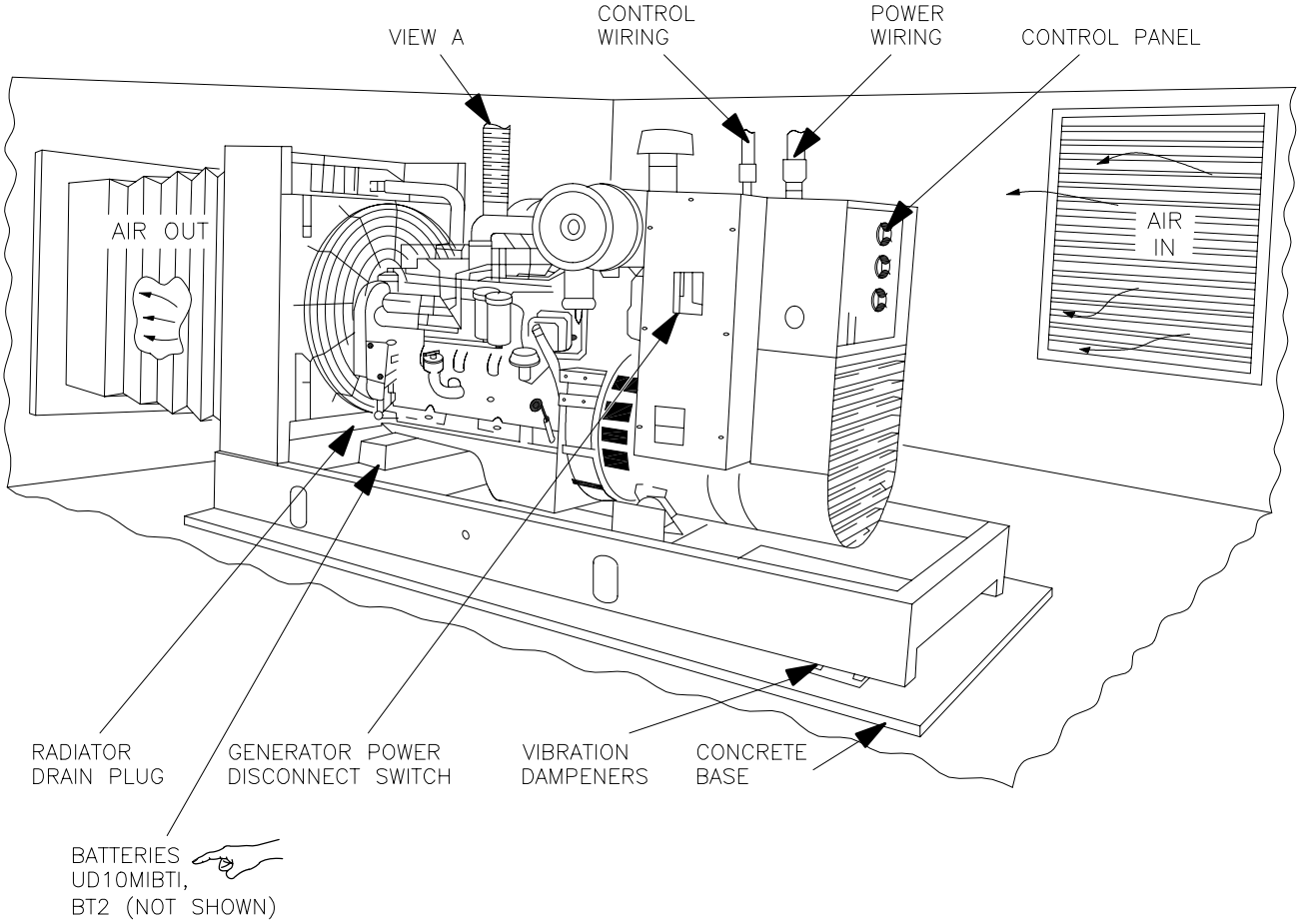

Figure 1−8. Diesel Generator (Onan) UD10M1/G1, Component Layout (Sheet 1 of 2)

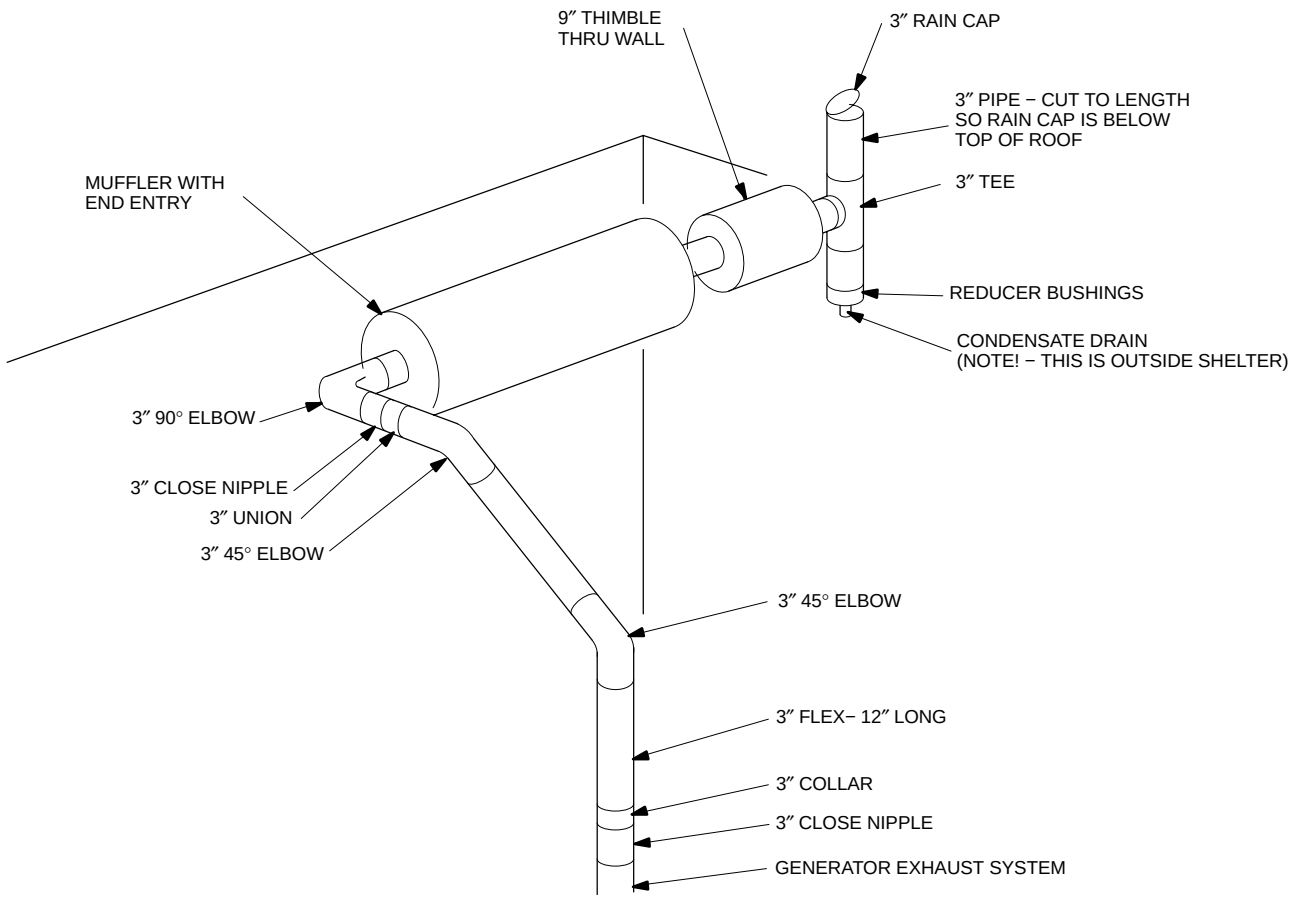

VIEW A − EXHAUST SYSTEM

NX2312

Figure 1−8. Diesel Generator (Onan) UD10M1/G1, Component Layout (Sheet 2 of 2)

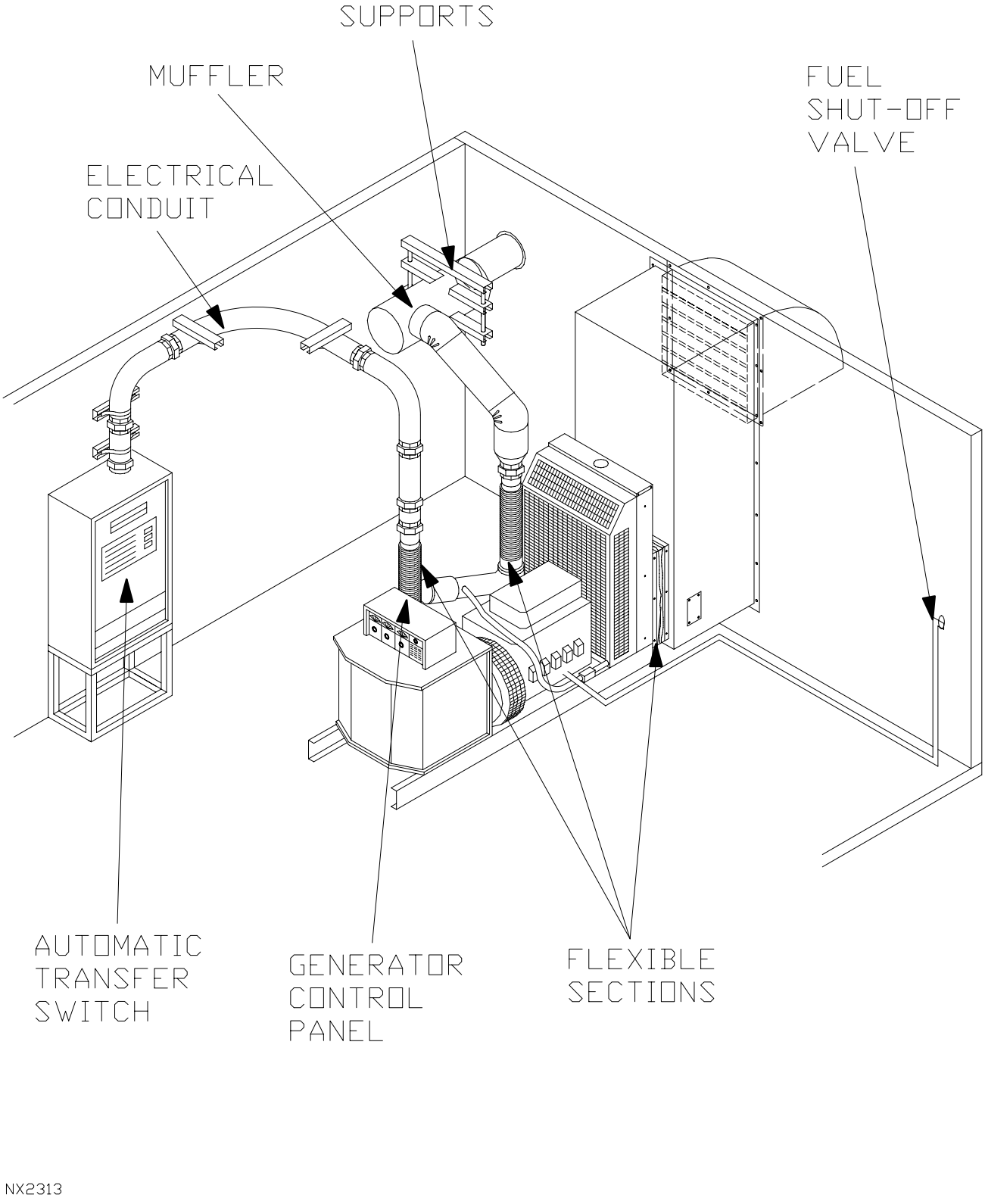

Figure 1−9. Diesel Generator (Kohler) UD10M1/G1, Component Layout

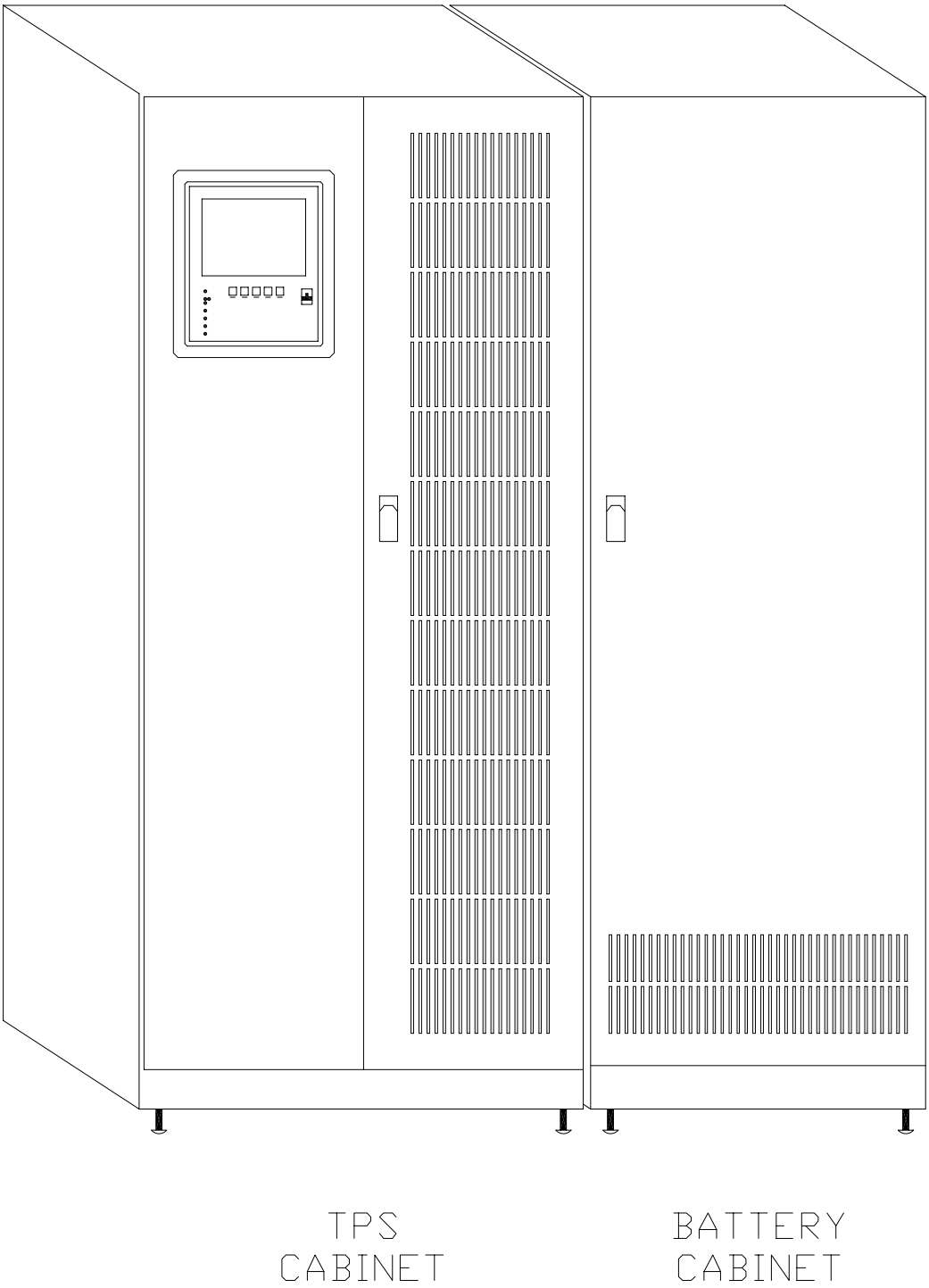

NX2314

Figure 1−10. Transition Power Source Component Layout (Type 1, 2, and 4) (Sheet 1 of 2)

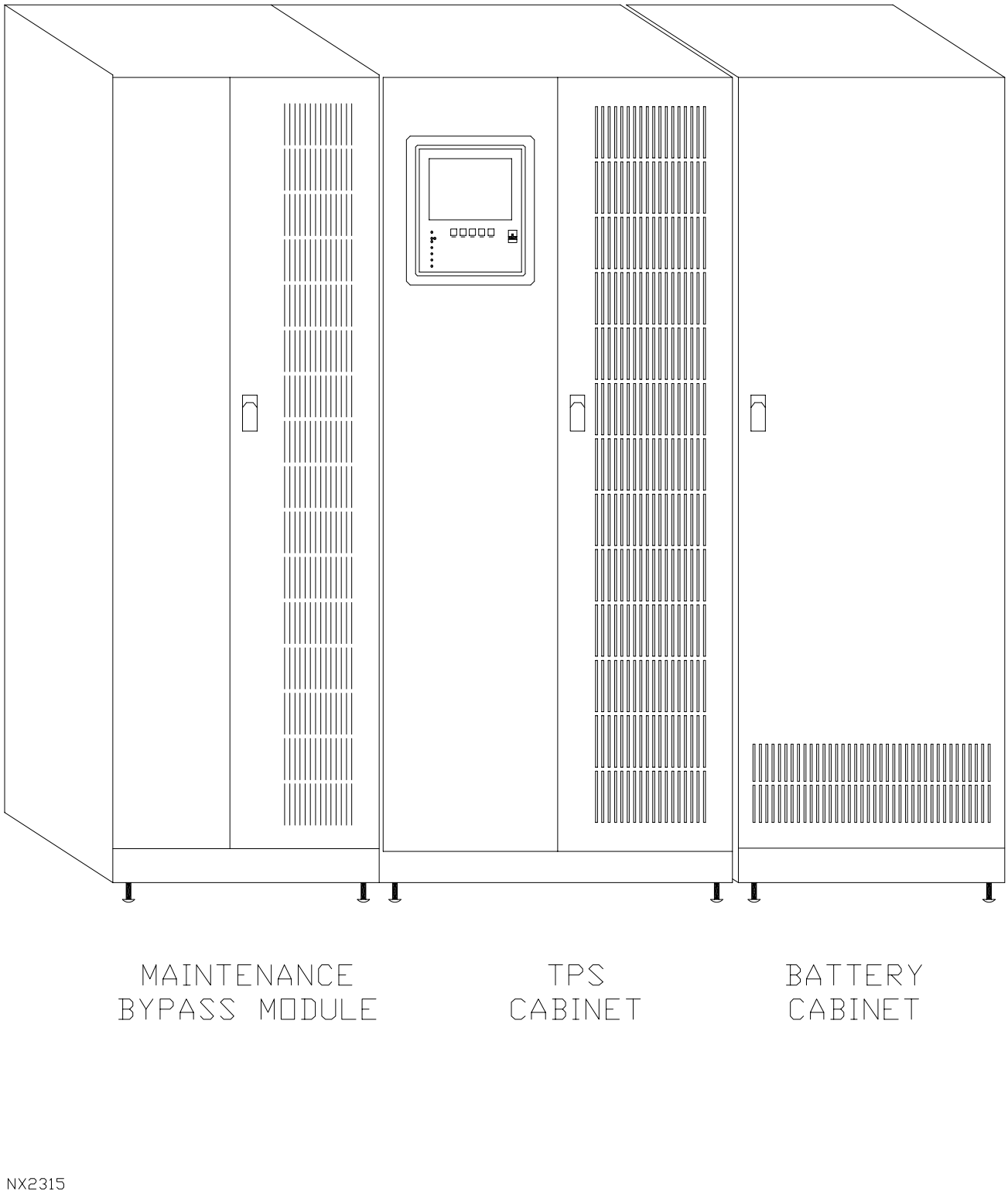

Figure 1−10. Transition Power Source Component Layout (Type 5 and later) (Sheet 2 of 2)

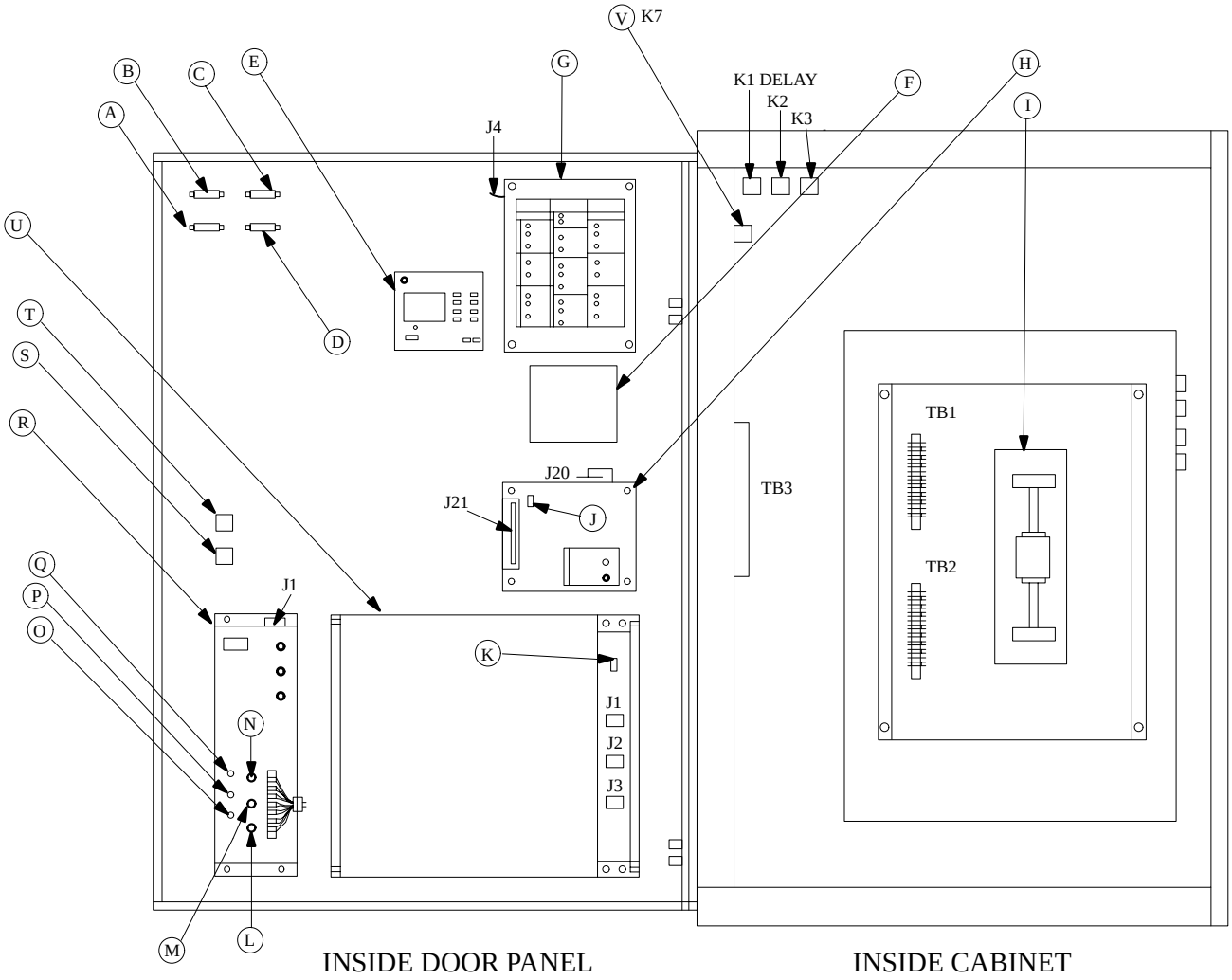

A. GENERATOR AVAILABLE LAMP
B. GENERATOR CONNECTED LAMP
C. NORMAL CONNECTED LAMP
D. NORMAL AVAILABLE LAMP
E. EXERCISER CLOCK
F. PROGRAMMED TRANSITION MODULE
G. POWER SENTRY MODULE
H. SIGNAL MODULE
I. TRANSFER SWITCH
J. NO DELAY/DELAY SWITCH
K. AUTO/OFF MOTOR DISCONNECT SWITCH
L. LO ALM ADJUSTMENT
M. HI ALM ADJUSTMENT
N. FLOAT VOLTAGE INCREASE ADJUSTMENT
O. LO BATTERY LED
P. HI BATTERY LED
Q. AC FAILURE LED
R. BATTERY CHARGER
S. AUTO/MANUAL RETRANSFER KEYSWITCH
T. TEST/NORMAL RETRANSFER KEYSWTICH
U. ACCESSORY PANEL
V. TPMS AUTO TRANSFER RELAY, K7

NX2316

Figure 1−11. Onan OT III Automatic Transfer Switch UD10A1−1, Component Layout

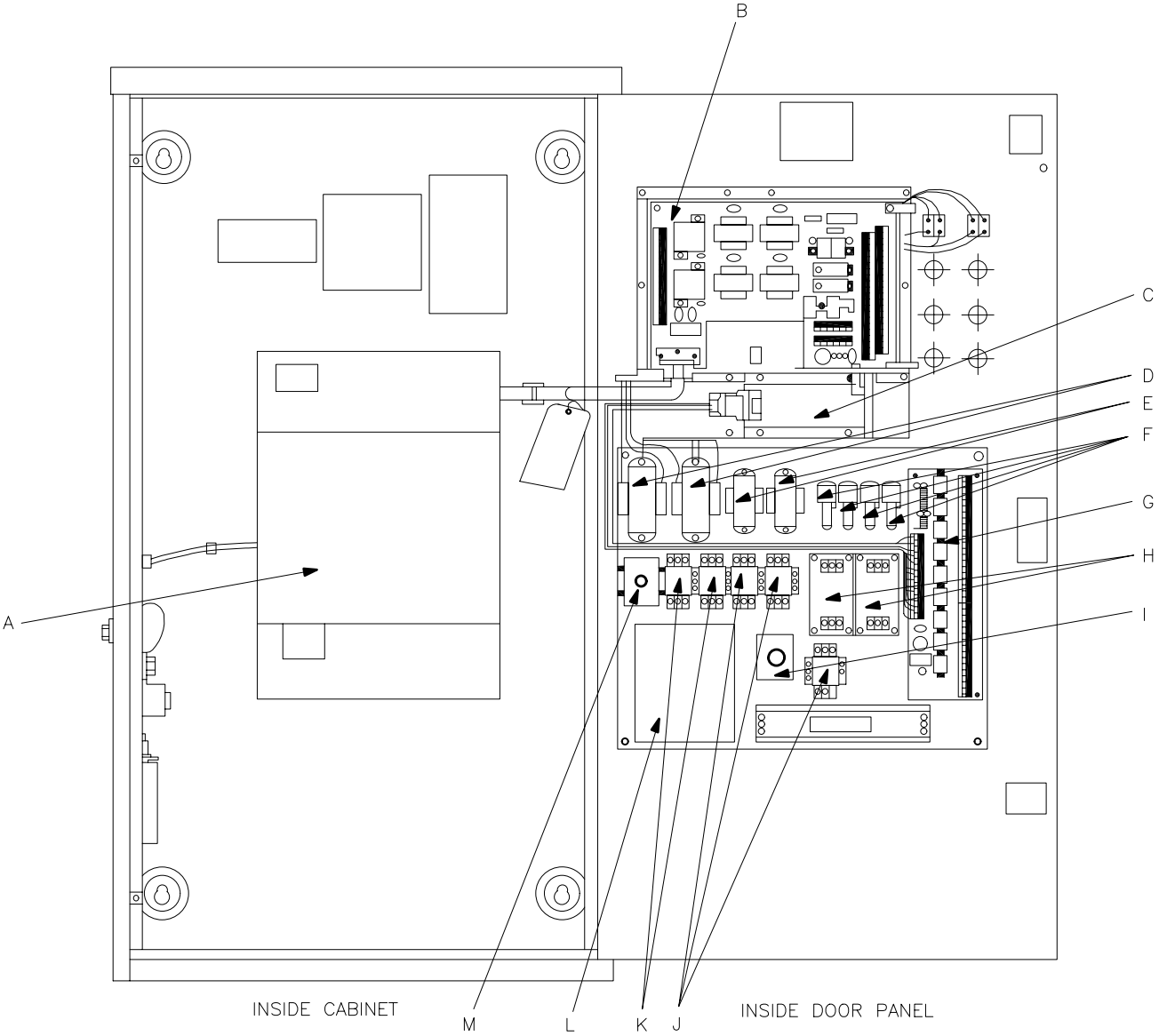

A. CONTACTOR ASSEMBLY
B. MICROCONTROLLER LOGIC BOARD
C. LOAD SHED MODULE
D. TRANSFORMERS (T1/T2) 208/18V 55VA
E. TRANSFORMERS (T3/T4) 208/24V 25VA
F. FUSES (F1−F4)
G. LOAD SHED CONTACT KIT
H. DRY CONTACT KIT
I. RELAY TIME DELAY ON (K1/TD1)
J. RELAY 120 VAC (K5, K6, AND K7)
K. RELAY 24 VAC (K3 AND K4)
L. BATTERY CHARGER
M. VOLTAGE SENSOR RELAY (K2)

NX2317

Figure 1−12. Kohler Automatic Transfer Switch UD10A1, Component Layout

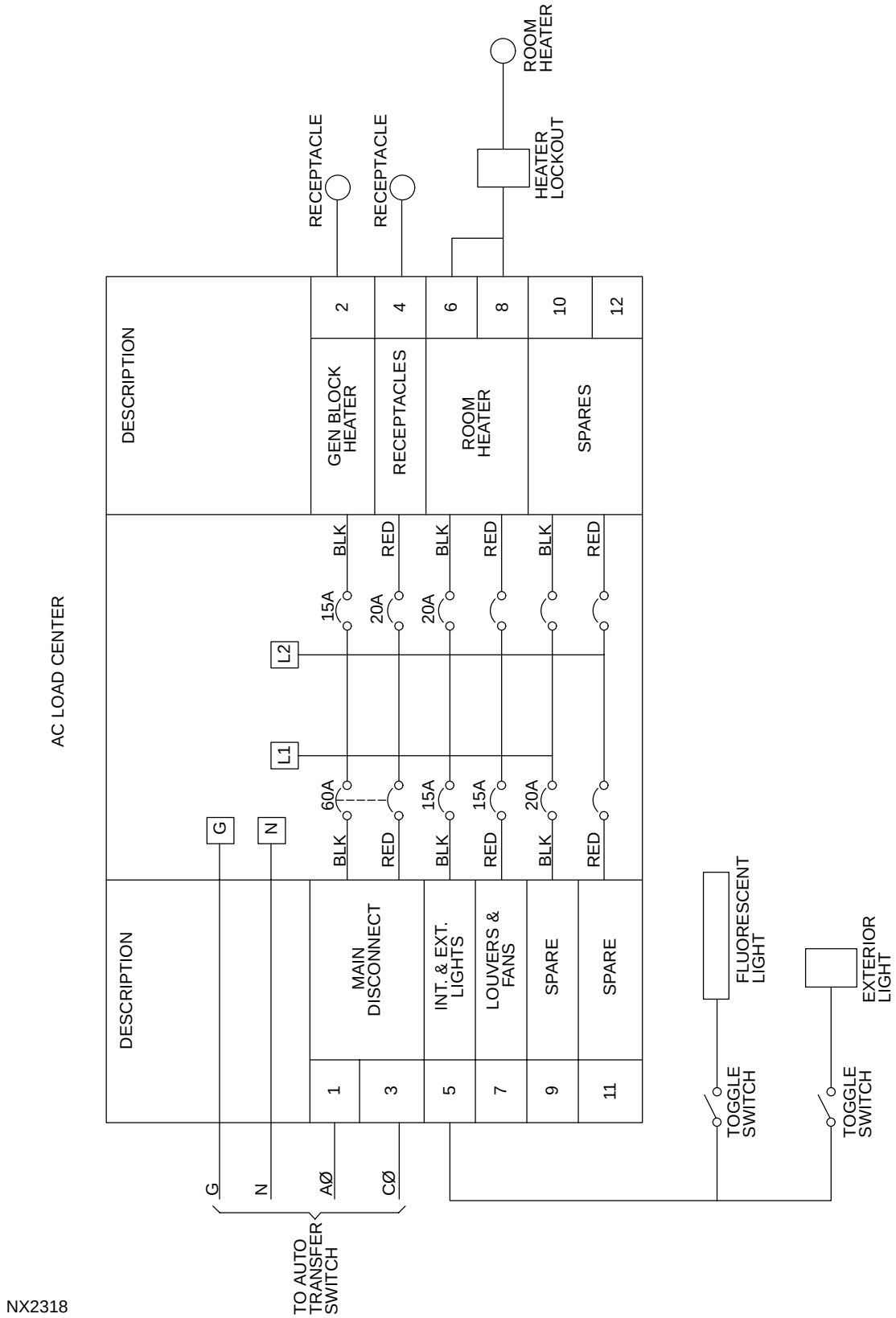

Figure 1−13. RDA Site Generator Shelter Power Distribution Panel, UD10A2

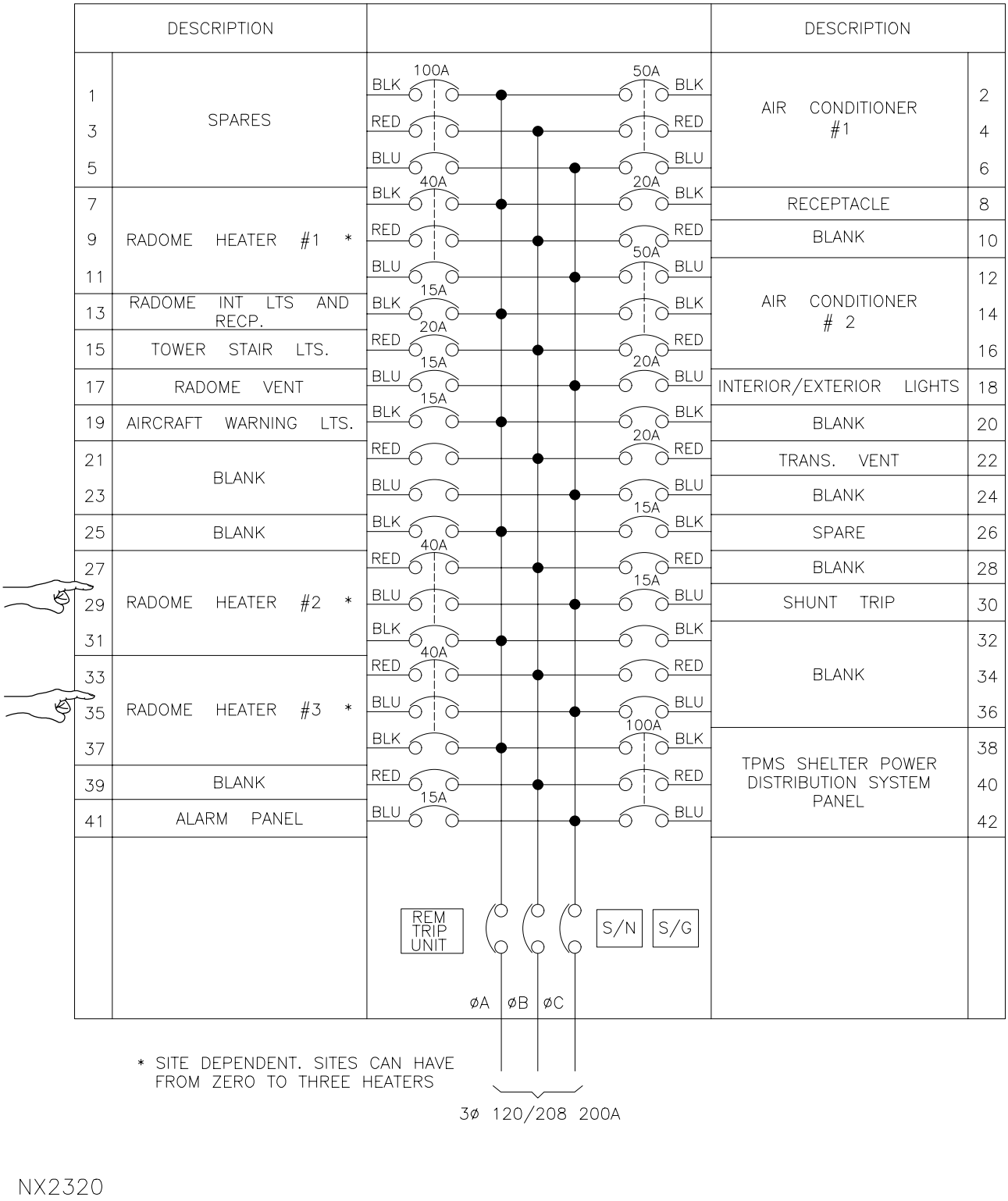

Figure 1−14. RDA Equipment Shelter Main Power Distribution Panel, UD7A2

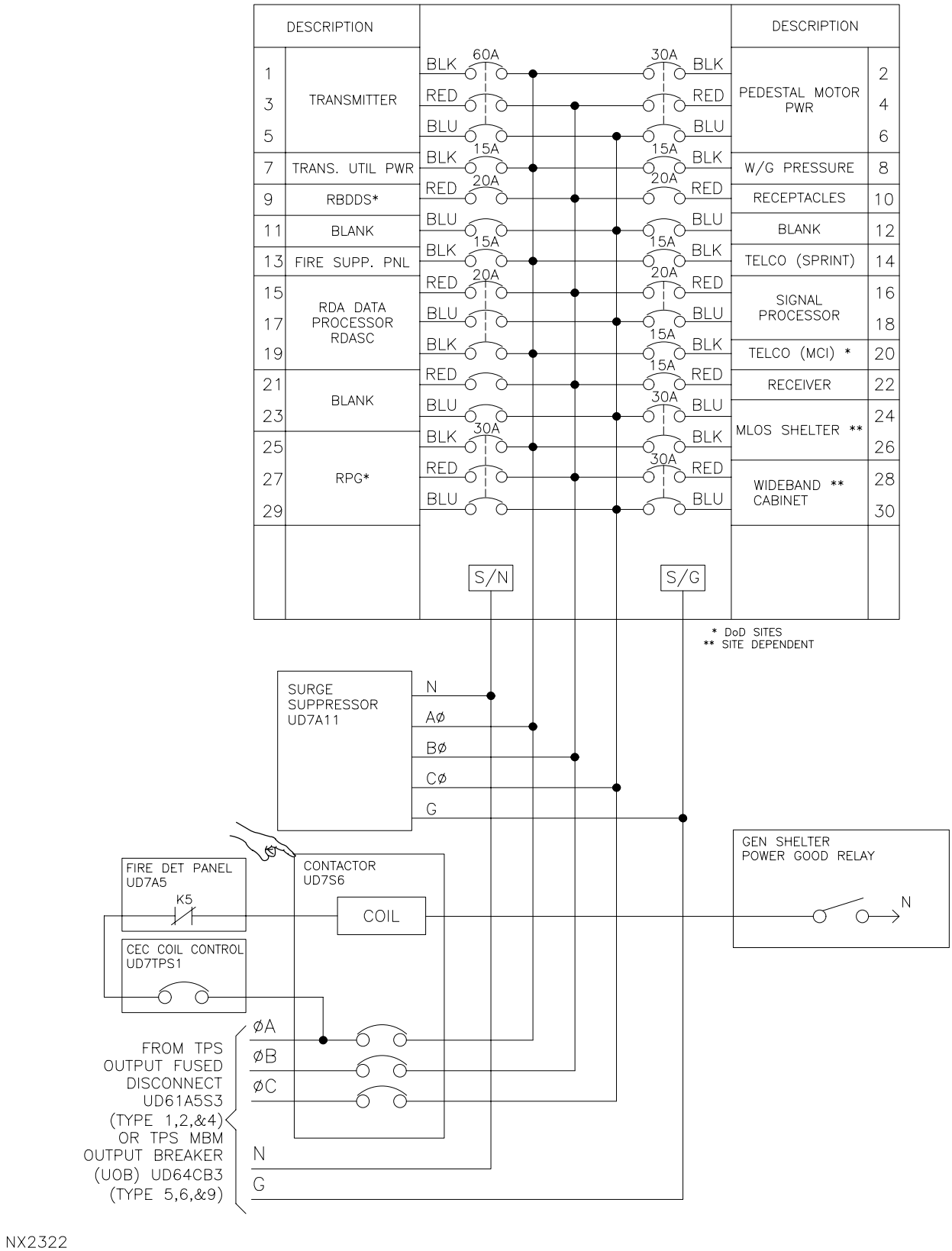

Figure 1−15. RDA Equipment Shelter Secondary Power Distribution Panel, UD7A3

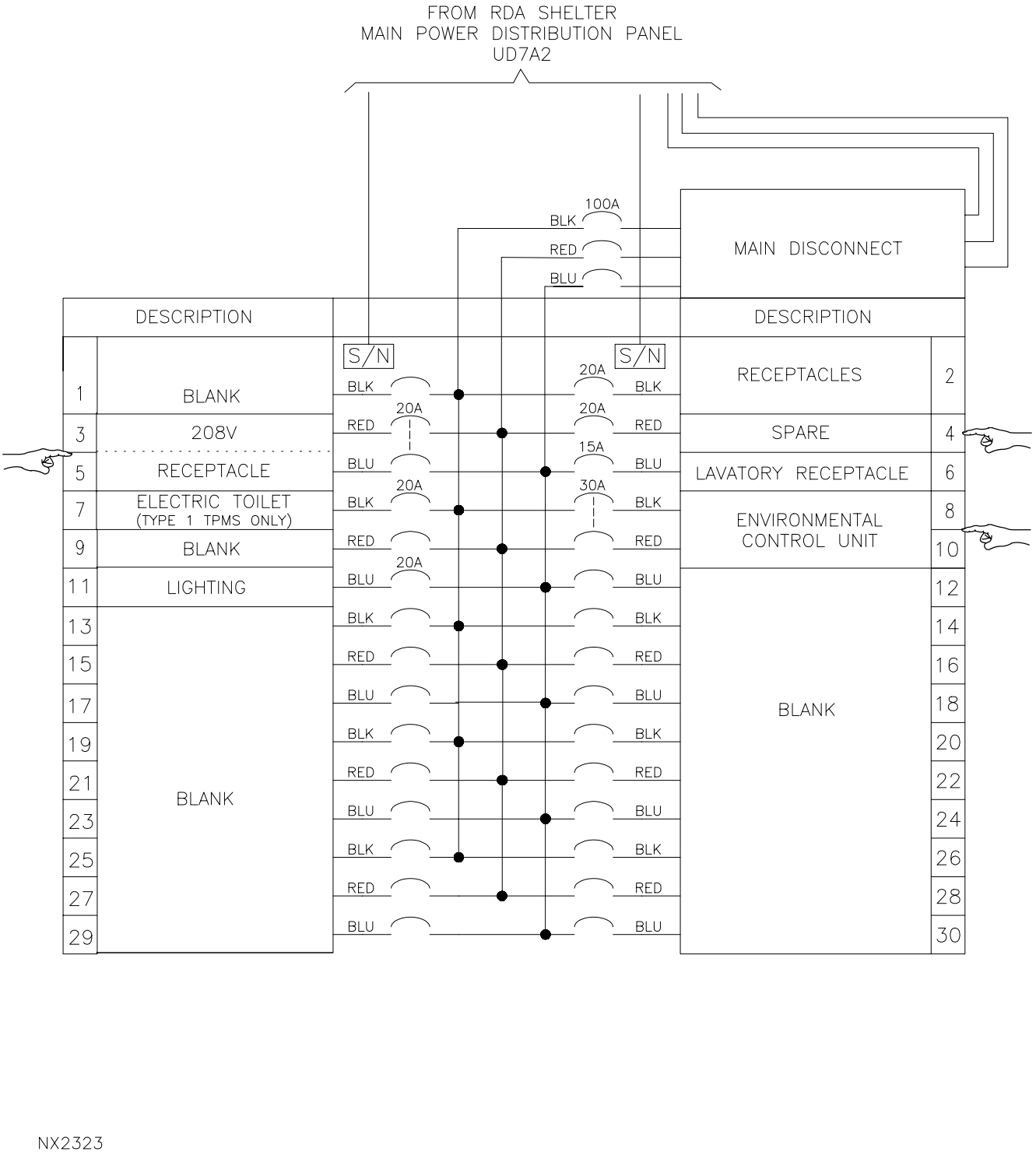

Figure 1−16. TPMS Shelter Power Distribution System Panel, UD60A5 (Type 1 and 2)
(Sheet 1 of 2)

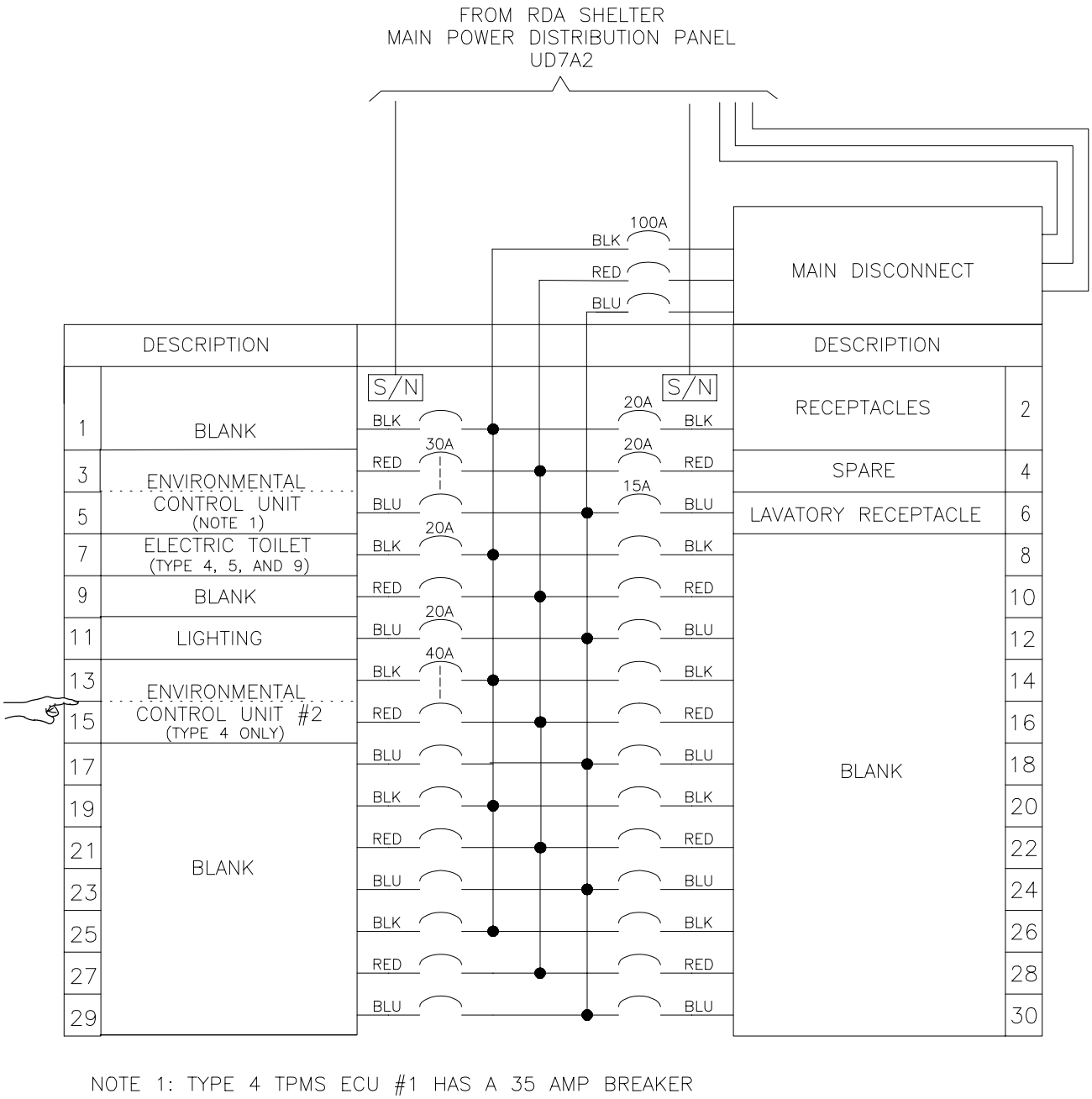

Figure 1−16. TPMS Shelter Power Distribution System Panel, UD60A5 (Type 4, 5, 6, and 9) (Sheet 2 of 2)

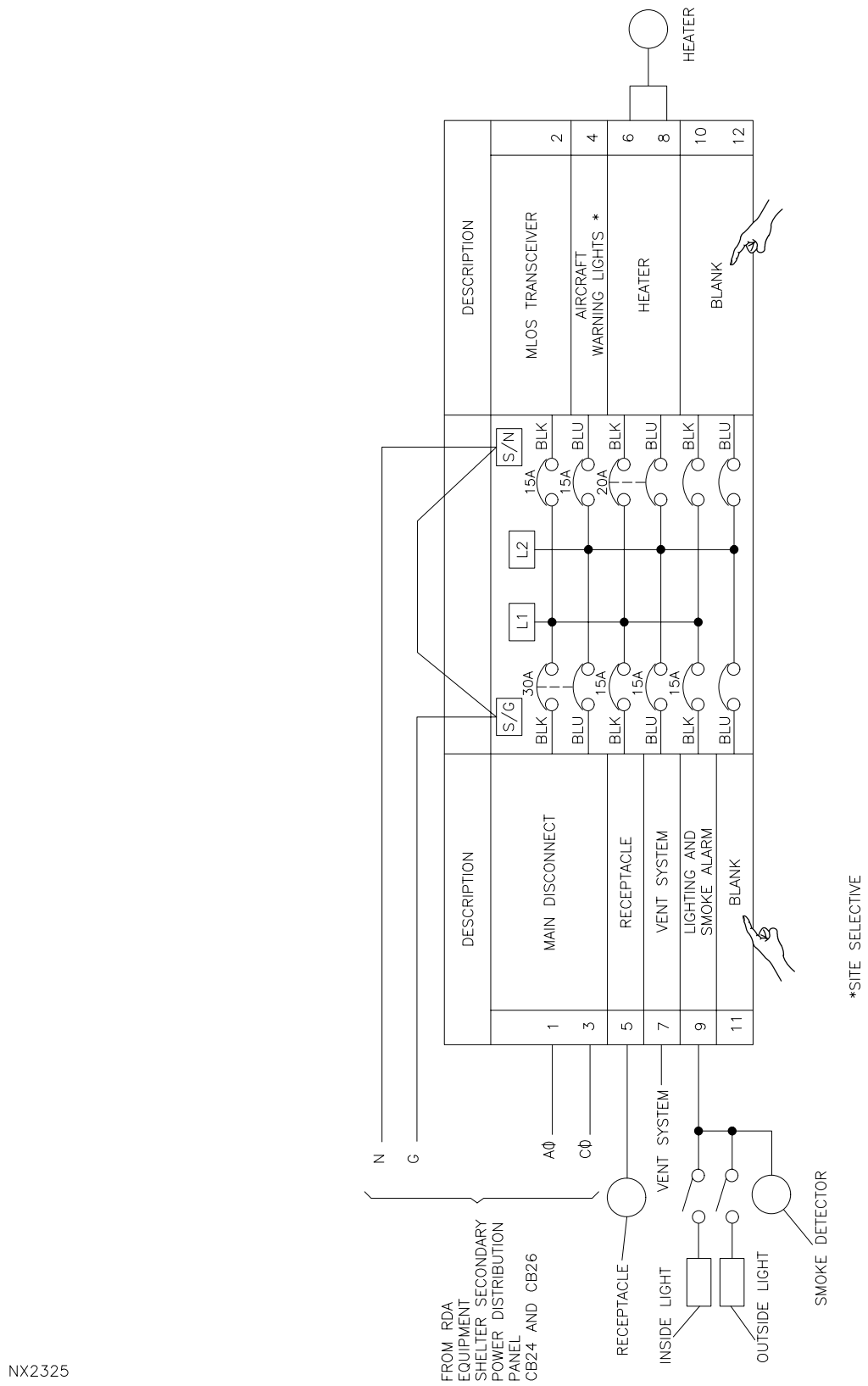

Figure 1−17. MLOS Shelter Power Distribution Panel, UD13A1

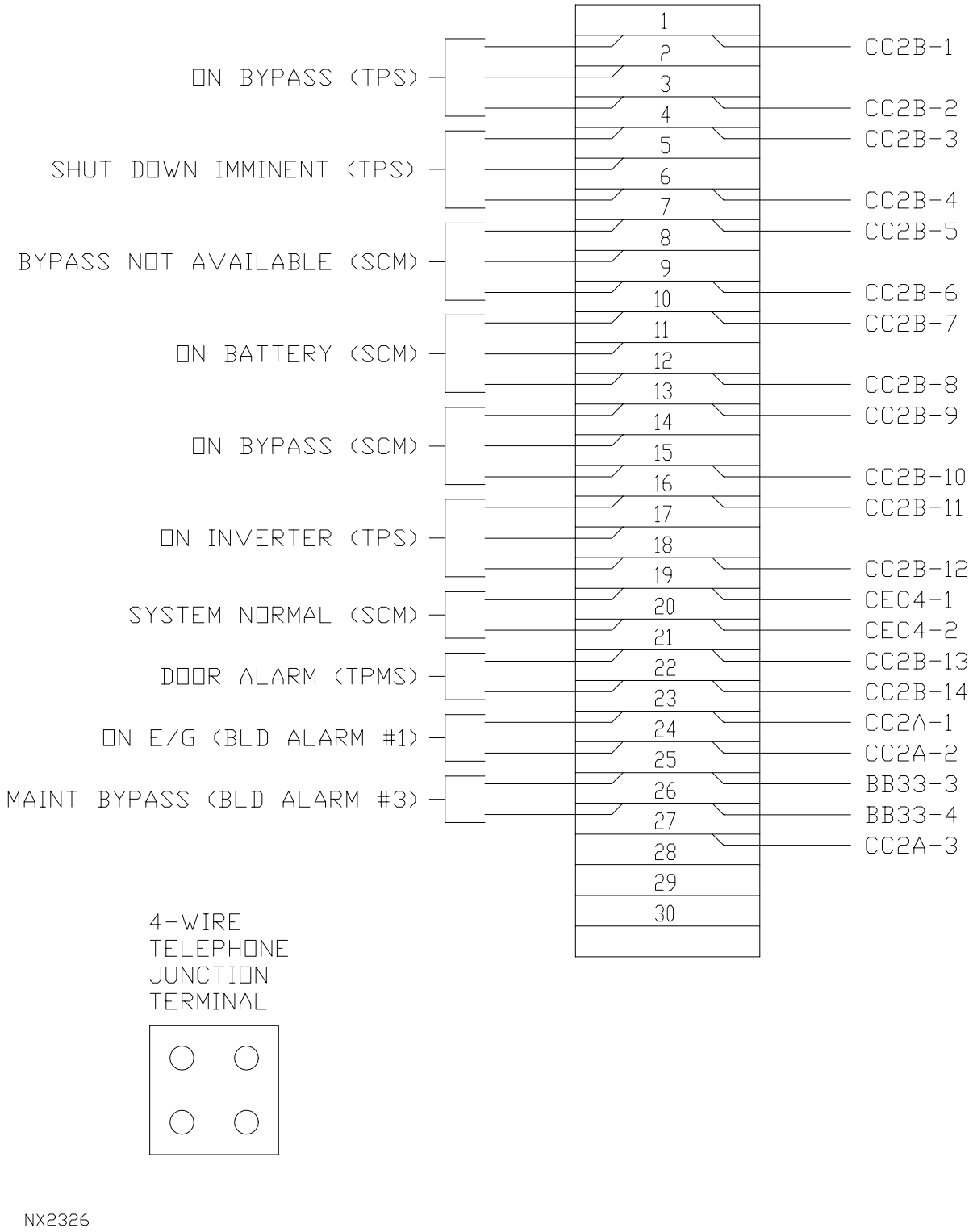

Figure 1−18. Transition Power Maintenance Shelter Alarm Termination Panel, UD60A6

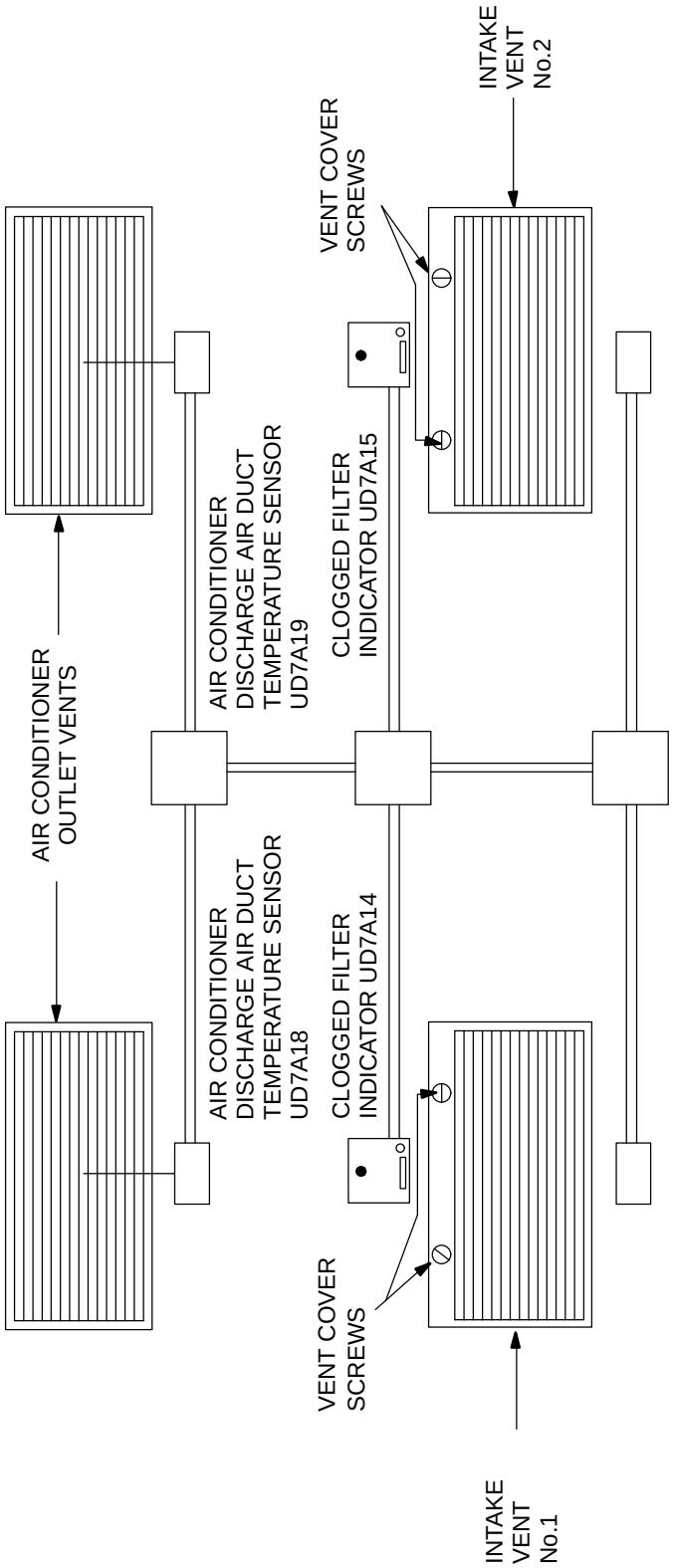

Figure 1−19. RDA Shelter Sensor and Vent Location (Sheet 1 of 4)

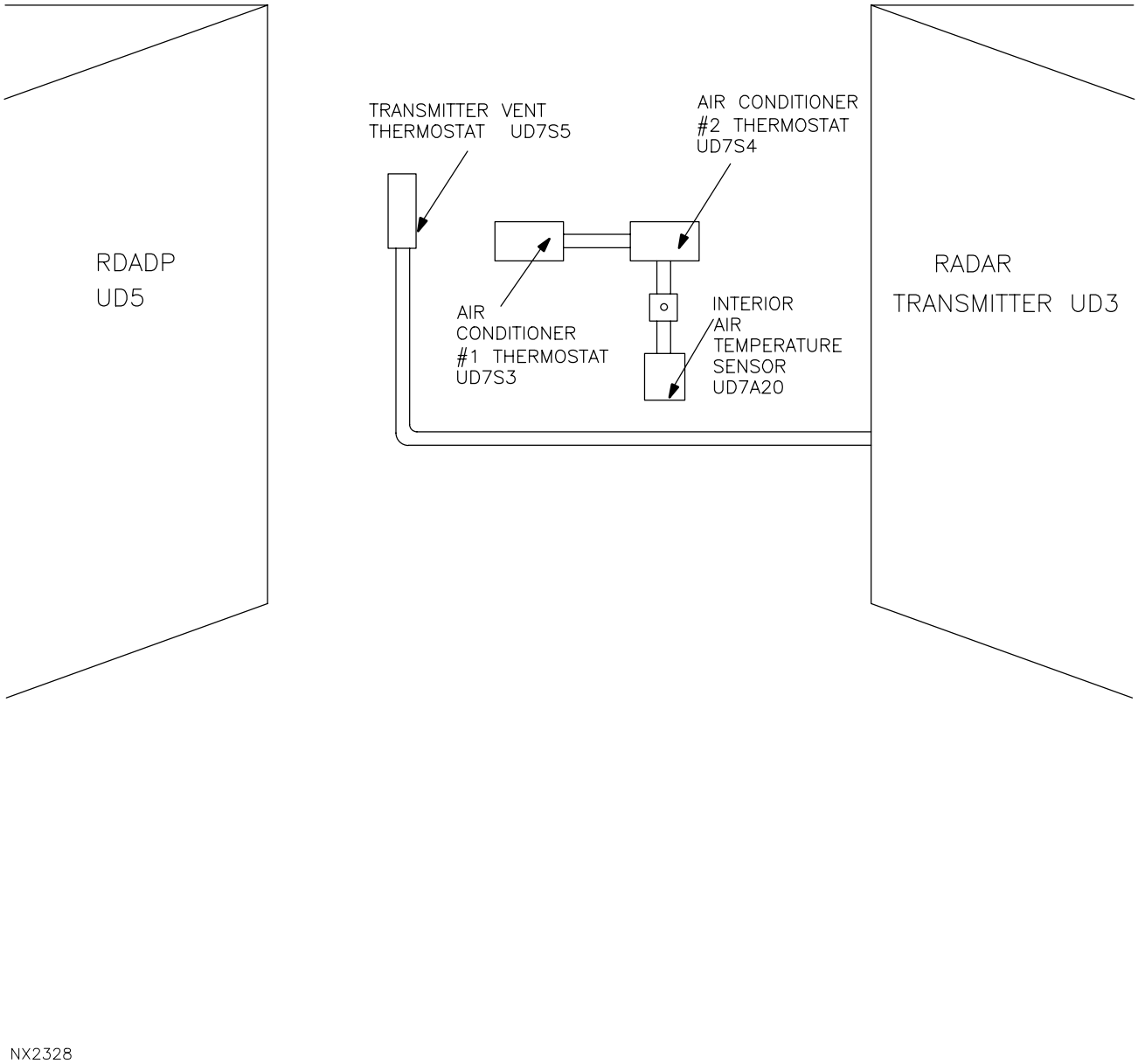

Figure 1−19. RDA Shelter Sensor and Vent Location (Sheet 2 of 4)

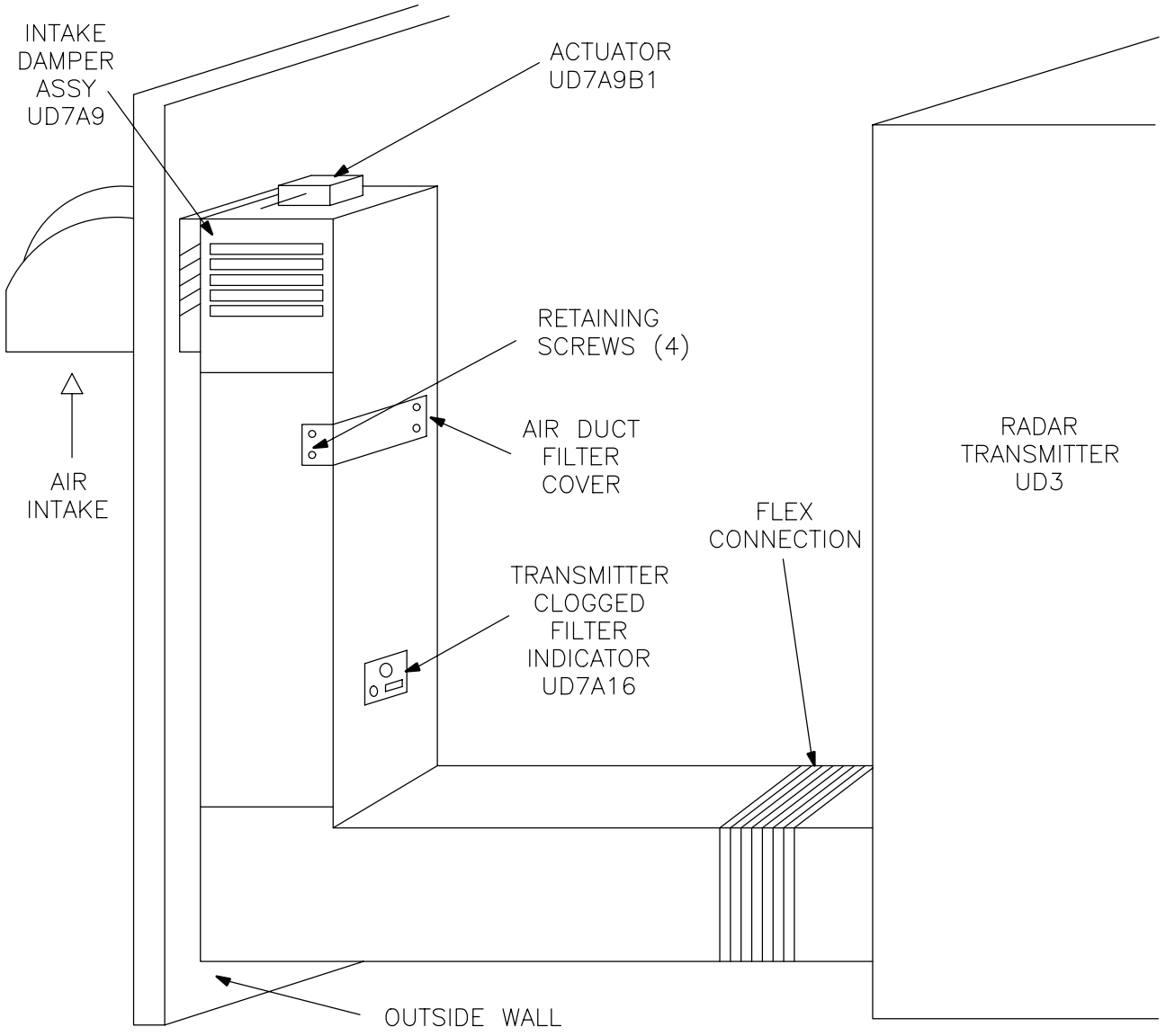

Figure 1−19. RDA Shelter Sensor and Vent Location (Sheet 3 of 4)

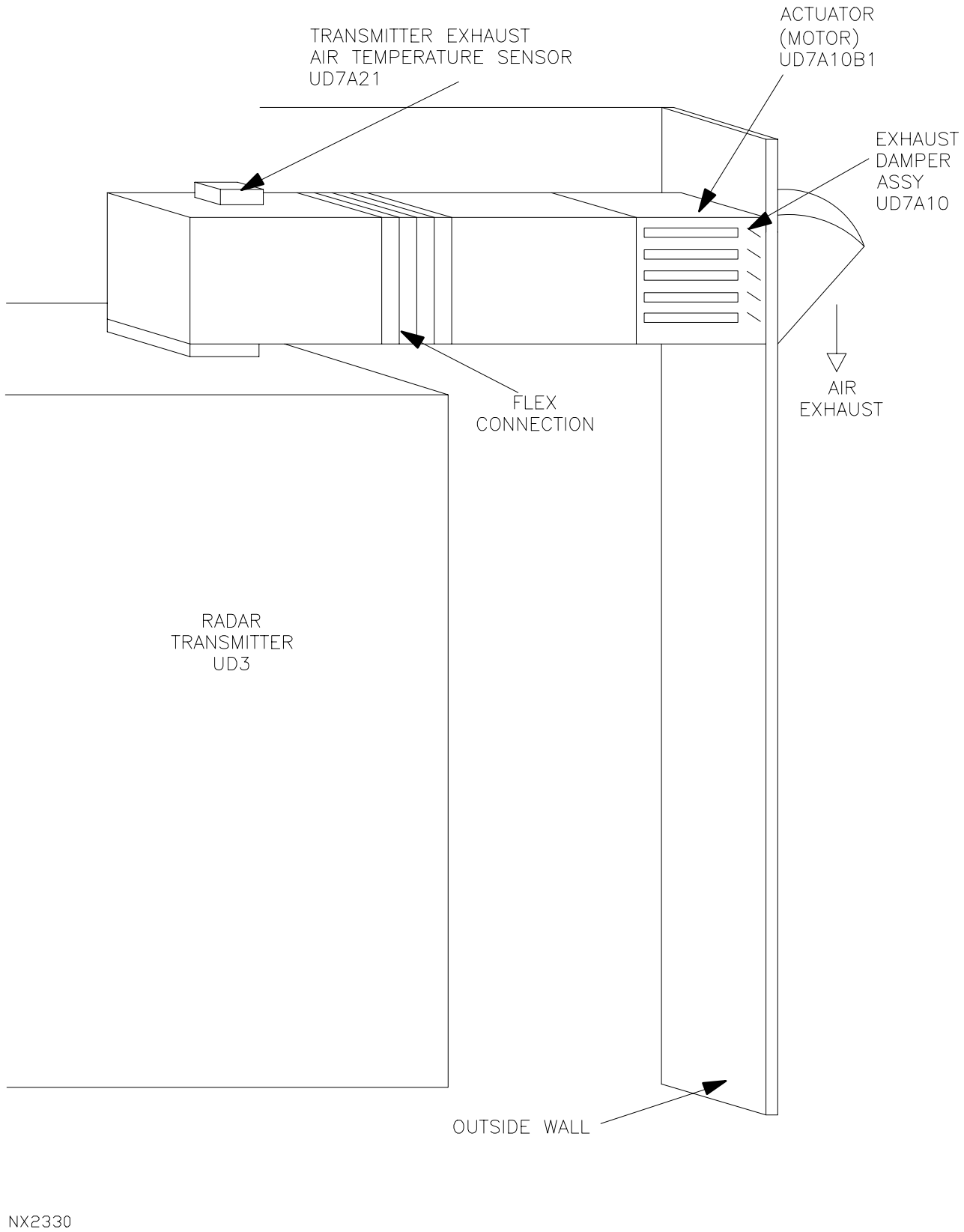

Figure 1−19. RDA Shelter Sensor and Vent Location (Sheet 4 of 4)

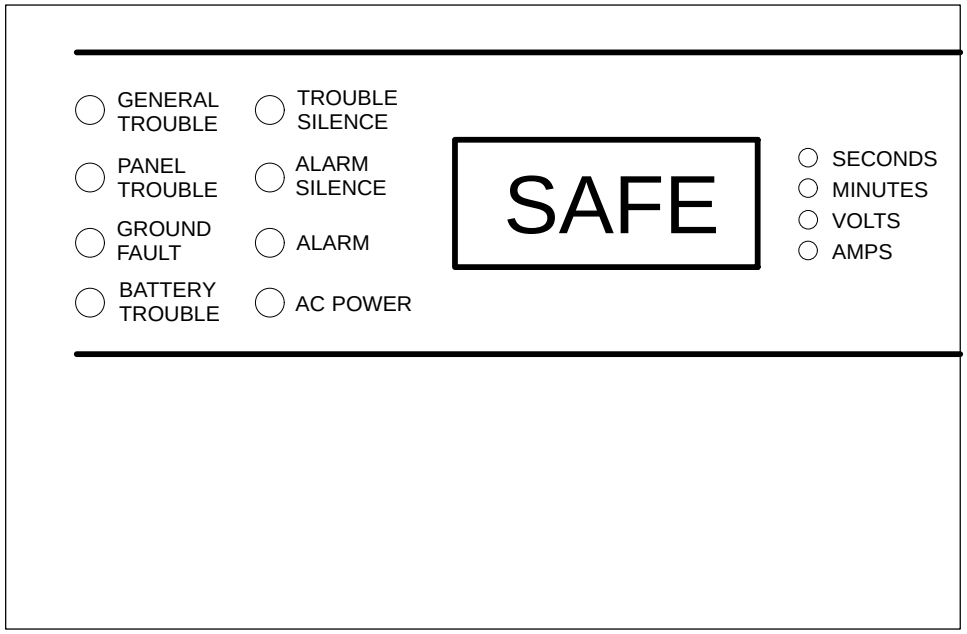

MICRO 1−EV

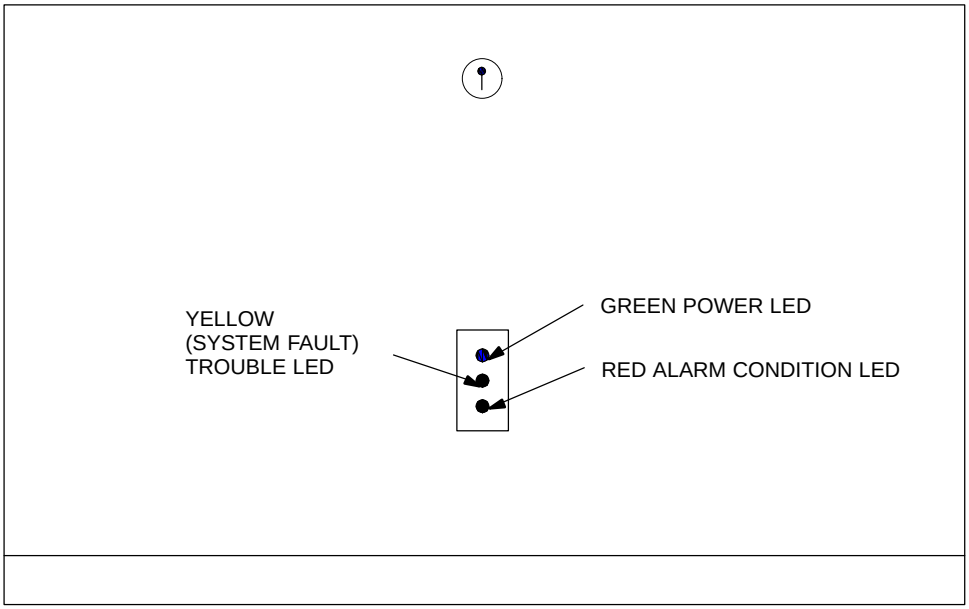

MICRO JUNIOR

NX2331

Figure 1−20. Fire Detection Micro 1 EV or Junior Control Panel, UD7A5

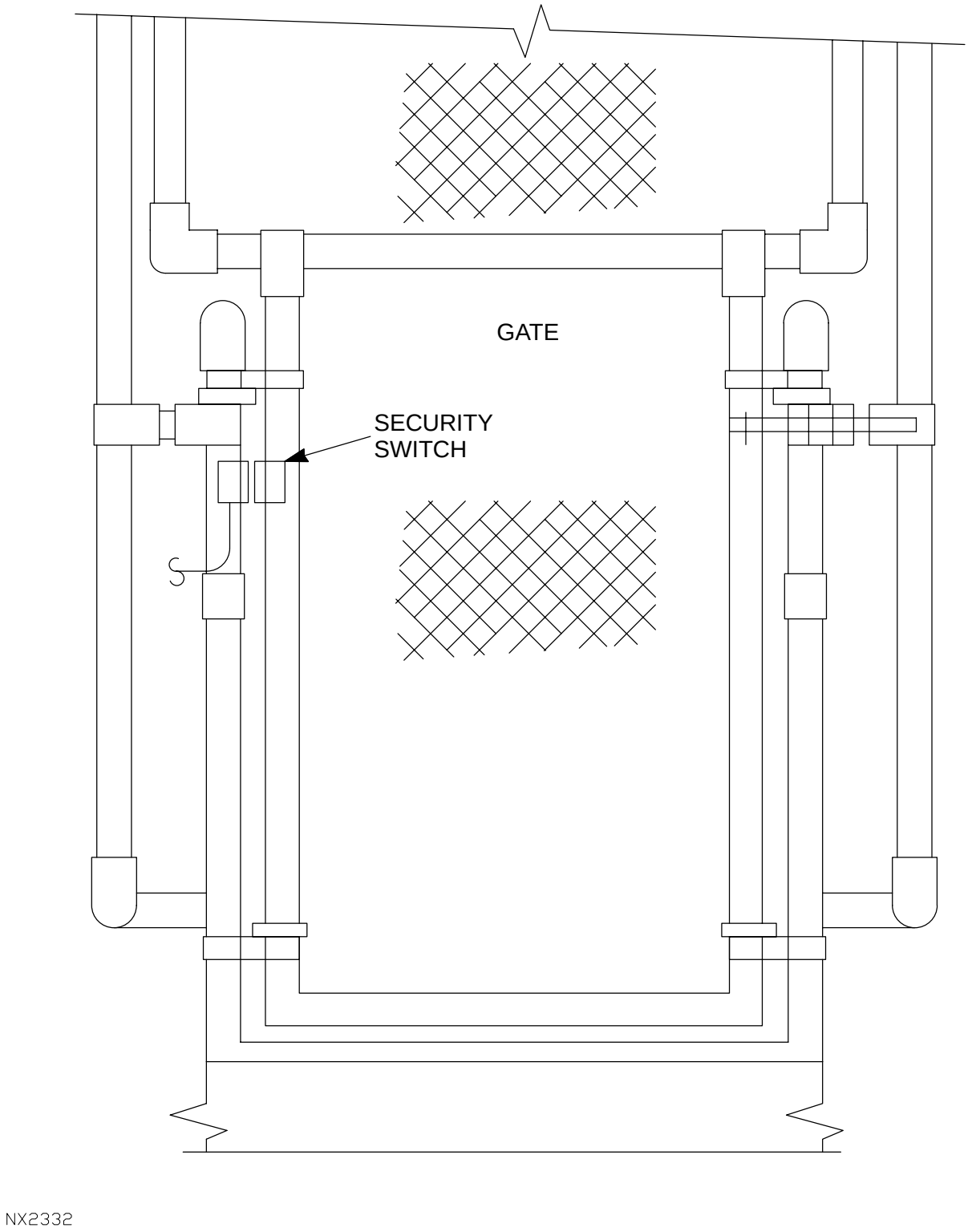

Figure 1−21. Tower Security Gate

SECTION 1−2. EQUIPMENT DESCRIPTION

1−2.1 RPIE TOOLS, EQUIPMENT, AND TEST EQUIPMENT.

The required tools, equipment, and test equipment for the RPIE system are listed in the applicable tables in the System Description manual, NWS EHB 6−500.

SECTION 1−3. SYSTEM DESCRIPTION

1−3.1 RPIE FUNCTIONAL SYSTEM DESCRIPTION.

The RPIE system provides the AC power generation and distribution, environmental (HVAC) control, fire detection and suppression, security and auxiliary, and shelter functions for the RDA site. Each of these functions have some interdependency. The functional description is covered in the following paragraphs.

1−3.2 AC POWER GENERATION AND DISTRIBUTION FUNCTION.

The AC power generation and distribution function starts at the generator shelter or TPS and is sent to all equipment in the RDA site area. Figure 1−22 and Figure FO1−1 through Figure FO1−5 show the AC power distribution.

1−3.2.1 Generator Shelter Vac Distribution.

Refer to Figure FO1−1 (Onan Generator) or Figure FO1−2 (Kohler Generator) and Figure FO1−5 for this discussion. Three−phase 120/208 Vac power is supplied to the Auto−Transfer Switch as utility power via the main disconnect circuit breakers, or generator (backup) power via the generator disconnect circuit breakers. The Auto−Transfer Switch logic circuitry determines which AC power source supplies the power for distribution to the RDA site equipment. In addition, the Auto−Transfer Switch provides the three−phase AC power to the TPS Disconnect Switch UD10TPS1. The TPS Disconnect Switch contains a fused single throw triple−pole switch that can be used to remove power from the Transition Power Source when maintenance needs to be performed on the TPS Input fused disconnect (UD61A5S1) or the TPS Maintenance Bypass fused disconnect (UD61A5S2) for Type 1, 2, and 4 TPMS shelters. For TPMS Types 5, 6, and 9, TPS Disconnect Switch UD10TPS1 will remove power from the Maintenance Bypass Module (MBM) UD64 when maintenance needs to be performed on the MBM or TPS cabinets.

1. Phase A and phase C power is provided to the Generator shelter power distribution panel circuit breakers CB1 and CB3, respectively.

2. The generator venting system receives phase C power through CB7. This power goes to the Thermostat UD10S2, to energize UD10A4B1, UD10A11B1, and UD10A11B2 opening intake and exhaust louvers and starting the exhaust fan. When the generator is running, the thermostat is bypassed by energizing the GEN RUN RELAY K11. With K11 energized, UD10A4B1, UD10A5B1, and UD10A3B1 operate to open both intake louvers and generator exhaust louvers. When either venting system is working, heater lockout relay is energized to prevent heater operation.

3. For Generator shelter heater operations, phase A and C power is provided through CB6 and CB8 and the heater lockout relay to the heater.

4. Generator block heater receives phase A power via CB2 and receptacles phase C power via CB4.

5. Interior and exterior lights get phase A power through CB5 and ON/OFF switches.

1−3.2.2 RDA Equipment Shelter Power Distribution.

The following paragraphs provide information on the RDA equipment shelter power distribution; refer to Figure FO1−3, sheets 1 through 4, for these discussions. Three−phase 120/208 Vac power is applied to the Main Power Distribution Panel main power circuit breaker from the Auto−Transfer Switch (ATS) as shown in Figure FO1−1 (for Onan ATS) and Figure FO1−2 (for Kohler ATS). The main power circuit breaker unit contains a remote trip unit that trips the circuit breaker in case of fire/smoke. The main power CB applies phase A, B, and C to phase A, B, and C power bus bars within the Power Distribution Panel (PDP). The Main PDP supplies power to all of the shelter RPIE equipment and three−phase 120/208 Vac to the Transition Power Maintenance Shelter PDP. The Secondary PDP provides power to all of the RDA radar equipment and the MLOS shelter Power Distribution Panel.

1−3.2.2.1 Main Power Distribution Panel UD7A2

This panel supplies 120/208 Vac to the following equipment.

Figure FO1−3, sheet 1:

1. The Main PDP receives 120/208 Vac of either utility power or generator power from the Auto−Transfer Switch.

2. The shelter receptacles receive 120 Vac phase A power from CB8 (6B) or 120 Vac phase B power from CB10 (6B). At some sites, the shelter receptacles fed by CB10 have been moved to CB14 in the Secondary PDP UD7A3.

3. The shelter interior and exterior light switches receive 120 Vac phase C power from CB18 (6B). When exterior or interior switch closes, the exterior or interior lights illuminate.

4. The transmitter venting system receives 120 Vac phase B power from CB22 (6A). When the transmitter vent thermostat closes, power is applied to the transmitter intake actuator to open the intake damper for outside air and exhaust actuator to the open exhaust dampers to exhaust the air to outside. When the thermostat is open, intake damper receives inside shelter air and the exhaust damper passes air into the shelter.

5. The security panel receives 120 Vac phase C power from CB41 (6A). When the security panel ON/OFF switch (PS) is ON (closed) power is applied to T1, which supplies 28 Vac to the security subsystem (which covers the RDA shelter, Generator shelter, TPMS, and tower).

Figure FO1−3, sheet 2:

1. Each NEXRAD site can have anywhere from 0 to 3 Radome heaters (UD2HR1, and, optionally, UD2HR2 and UD2HR3) (3B). Each Radome heater receives 208 Vac three−phase power from the Main PDP.

- Radome Heater #1 receives power via CB7, 9, and 11 (7A).
- Radome Heater #2 receives power via CB27, 29, and 31 (7B).
- Radome Heater #3 receives power via CB33, 35, and 37 (7B).

2. The aircraft warning lights receives 120 Vac phase A power from CB19 (6A).
3. The Radome receptacles and lights receives 120 Vac phase A power from CB13 (6A).
4. Tower stair lights receive 120 Vac phase B power from CB15 (6A).
5. The Radome venting system receives 120 Vac phase C power from CB17 (7A). When the Radome thermostat energizes, power is applied to Radome Damper Motor 11A1B1 to open the damper and the Radome Fan Motor 11A2B1 to start fan operation. The Radome fan vents are gravity vent vanes.
6. The TPMS Shelter Power Distribution Panel UD60A5 receives three−phase 120/208 Vac from CB38, 40, and 42 (7A). CB26 is spared and not used.

Figure FO1−3, sheet 3:

Air Conditioner #1 UD7AC1 receives three−phase power 208 Vac from CB2, 4, and 6 (7B). When the air conditioner circuit breaker (5B) is set to ON, 208 Vac two−phase power is sent to the 24 volt Transformer AC1T1 which provides 24 Vac power for the Air Conditioner Thermostat UD7S3 (6A) and relay operation.

Figure FO1−3, sheet 4:

1. Air Conditioner #2 UD7AC2 receives three−phase power 208 Vac from CB12, 14, and 16 (8B). When the air conditioner circuit breaker (5B) is set to ON, 208 Vac two−phase power is sent to the 24 volt Transformer AC2T1 which provides 24 Vac power for the Air Conditioner Thermostat UD7S4 (6A) and relay operation.
2. The Fire Detection Subsystem Panel Assembly UD7A5 (7A) receives 120 Vac phase A power from CB13 (see Figure FO1−3, sheet 11, 3B).
3. The shunt trip CB30 (8A) provides 120 Vac phase C through the K4 (7A) Fire Detection Subsystem panel relay to the remote trip unit in the main power circuit breaker when a fire or smoke is detected by the Fire Detection Subsystem. When 120 Vac is applied to the remote trip unit via energized K4, the remote trip unit opens the main power circuit breaker removing all AC power to the RDA equipment shelter and AC power to the TPMS Power Distribution Panel UD60A5.

1−3.2.2.2 Secondary Power Distribution Panel UD7A3.

This panel receives three−phase 120/208 Vac from the TPS unit via the Magnetic Contactor UD7S6 (Figure FO1−3, sheet 9, zone 8A; sheet 10, zone 7A; sheet 11, 7A) which applies phases A, B, and C to phase A, B, and C power bus bars in the Secondary PDP. It supplies power to the following equipment.

Figure FO1−3, sheet 9:

1. The Signal Processor located in the RDADP cabinet receives two−phase (B and C) power from CB16 and 18 (6B) via UD1FL3 and UD5J24 for internal power distribution.

2. The Pedestal Power Amplifier Unit located in the RDADP cabinet receives 120/208 Vac three−phase power from CB2, 4, and 6 (6B) via UD1FL2 and UD5J2 for internal power distribution.

3. The RDADP cabinet receives three−phase 120/208 Vac from CB15, 17, and 19 (6A) via UD1FL1 and UD5J1 for internal power distribution.

4. The MLOS Shelter Power Distribution Panel receives two−phase (A and C) power from CB26 and CB24 (6A), respectively.

5. The Surge Suppressor receives three−phase 120/208 Vac directly from the input power bus (8B).

Figure FO1−3, sheet 10:

1. The W/G pressurization unit receives 120 Vac phase B power from CB8 (5B) via UD1FL5 and UD6TB1.

2. The Transmitter receives 120 Vac phase A power from CB7 (5A) at TB1.

3. The Transmitter receives three−phase 120/208 Vac from CB1, 3, and 5 (5B) at TB2.

4. The Receiver is supplied 120 Vac phase B power from CB22 (5A) via UD1FL4 and UD4J26. Power is distributed to the receiver cabinet power supplies 1, 2, and 4 through 9 and receiver cabinet fans. (Refer to NWS EHB 6−510, receiver functional diagrams for the receiver internal cabling).

5. The Surge Suppressor receives three−phase 120/208 Vac directly from the input power bus (6B).

Figure FO1−3, sheet 11:

1. The Fire Detection Subsystem Panel Assembly UD7A5 (3B) receives 120 Vac phase A power from CB13 (3B).

2. Some of the shelter receptacles receive 120 Vac phase A power from CB14 and CB20 (3B) and phase B power from CB10 (5A). The number of receptacles varies depending on shelter configuration, and are dedicated for Telco equipment and other critical equipment.

3. CB9 supplies 120 Vac phase B power to a single, duplex outlet reserved for Remote Base Data Distribution Server UD72 equipment. This circuit is installed only at DoD sites.

4. The Surge Suppressor receives three−phase 120/208 Vac directly from the input power bus (5B).

1−3.2.3 MLOS Shelter Power Distribution.

The MLOS shelter receives 120/208 Vac at CB1 (phase A) and CB3 (phase C) from the RDA equipment shelter Secondary PDP CB24 and CB26 (Figure FO1−3, sheet 9, zone 6A). Neutral and ground are jumpered together in the Power Distribution Panel. The MLOS shelter Power Distribution Panel provides power to the following equipment. Refer to Figure 1−22.

1. The MLOS Transceiver receives 120 Vac (phase A) power from CB2.
2. The aircraft warning light circuitry receives 120 Vac (phase C) power from CB4.
3. The 3.0 kW heater circuitry receives 208 Vac power from CB6 (phase A) and CB8 (phase C).
4. The shelter receptacles receive 120 Vac (phase A) power from CB5.
5. The MLOS shelter venting circuitry (system) receives 120 Vac (phase C) power from CB7.
6. The MLOS shelter lighting and smoke detector receives 120 Vac (phase A) power from CB9.

1−3.2.4 Transition Power Maintenance Shelter (TPMS) Power Distribution.

Refer to Figure FO1−4, sheets 1 through 3, for this discussion. Three−phase, 120/208 Vac power is supplied to main breaker of the TPMS shelter Power Distribution System Panel from the Main Power Distribution Panel in the RDA shelter. It supplies power to the following equipment:

1. The Environmental Control Unit (ECU) receives 208 Vac (phase B and C) power from CB3/5 (Type 4 ECU #1, 5, 6, and 9) (see Figure FO1−4, sheets 2 and 3). In Type 1 and 2 shelters, this circuit breaker provides for a 208 Vac receptacle (see Figure FO1−4, sheet 1).
2. The Electric Toilet receives 120 Vac (phase A) power from CB7 (Type 1, 4, 5, and 9 shelters).
3. Interior and exterior lighting receives 120 Vac (phase C) power from CB11.
4. The shelter receptacles receive 120 Vac (phase A) power from CB2.
5. The lavatory receptacle receives 120 Vac (phase C) power from CB6.
6. The ECU in Type 1 and 2 shelters receives 208 Vac from CB8/10 (see Figure FO1−4, sheet 1).
7. ECU #2 in Type 4 shelters receives 208 Vac from CB13/15 (see Figure FO1−4, sheet 2)

1−3.2.4.1 TPS Electrical Power Distribution.

Refer to Figure FO1−5, sheet 1 or 2, for this discussion. In the Type 1, 2, and 4 TPMS installations (see Figure FO1−5, sheet 1), three−phase, 208 Vac power is supplied to the 200 amp input fused disconnect (UD61A5S1) in the TPMS shelter from the Auto−Transfer Switch via the 200 amp TPMS fused disconnect (UD10TPS1) in the generator shelter. With the 200 amp input fused disconnect closed, power is sent to the TPS. Output from the TPS is sent through a 100 amp output fused disconnect (UD61A5S3) via the magnetic contactor to the Secondary Power Distribution Panel in the RDA shelter for critical power distribution. A 100 amp (Type 1 and 2) or 200 amp (Type 4 with 110 amp fuses) maintenance bypass fused disconnect (UD61A5S2) provides a path around the TPS for maintenance. With the 200 amp input fused disconnect open, the 100 amp output fused disconnect open, and the 100 (200) amp maintenance bypass fused disconnect closed, electrical power is routed around the TPS to the Secondary Power Distribution Panel in the RDA shelter.

In the Type 5, 6, and 9 TPMS installations (see Figure FO1−5, sheet 2), three−phase, 208 Vac power is supplied from the 200 amp TPMS disconnect in the generator shelter to the Maintenance Bypass Module UD64 unit input breaker (UIB) UD64CB1 and the maintenance bypass breaker (MBB) UD64CB2. With the MBB breaker open and the UIB breaker closed, power is sent to the TPS. Output from the TPS is sent through the Maintenance Bypass Module unit output breaker (UOB) UD64CB3 to the Secondary Power Distribution Panel in the RDA shelter for critical power distribution. The Maintenance Bypass Module bypass breaker (MBB) provides a path around the TPS for maintenance. With the UIB and UOB breakers open and the MBB breaker closed, electrical power is routed around the TPS to the Secondary Power Distribution Panel in the RDA shelter for critical power distribution when the TPS is down for maintenance.

1−3.3 HEATING, VENTING, AND AIR CONDITIONING (HVAC) FUNCTIONAL DESCRIPTION.

The HVAC Subsystem supplies the necessary environmental controls for heating, ventilating, and air conditioning within the RDA area. This subsystem provides the following:

1. Independent heating functions for the radome, generator shelter, RDA equipment shelter, TPMS shelter, and MLOS shelter.
2. Independent ventilating subsystems for the radome, generator shelter, RDA equipment shelter, and MLOS shelter.
3. Air conditioning for the RDA equipment shelter.
4. Heating and air conditioning for the TPMS shelter equipment.

The functional description of the HVAC is divided into three functional areas: heating, ventilating, and air conditioning. These three areas are covered in subsequent paragraphs.

1−3.3.1 Heating.

The heating function is discussed by separate functional areas. These areas are the radome, generator shelter, RDA equipment shelter, and MLOS shelter.

1. Radome heating uses 10 kW heater(s) (UD2HR1, HR2, and HR3), to perform the heating function. The number of heaters installed is determined by where each site falls within three geographic temperature zones/tiers, with the most northern tier requiring three heaters and the most southern requiring none. Each 10 kW heater is pointed away from the pedestal. The radome heaters are thermostatically controlled and are provided for technician comfort during maintenance on the pedestal in cold weather. The heaters are not provided for the purpose of equipment stability. The power to each radome heater is manually controlled from a three−phase circuit breaker in the RDA Main Power Distribution Panel UD7A2 and a disconnect switch in the radome. See Figure FO1−3, sheet 2 for the radome heater circuitry.

2. Generator shelter heating is performed using a 4.8 kW heater UD10HR1 with a thermostat. The heat is applied to maintain the minimum temperature of the shelter at 50°F when the generator is not running. The heating temperature control is set to the necessary positions (1 to 5) to maintain the generator shelter interior air temperature at 50 to 60 degrees Fahrenheit. When the generator is running, a heater lockout occurs which removes power to the generator shelter heater. See Figure FO1−1 (Onan Generator) or Figure FO1−2 (Kohler Generator) for the generator shelter heater circuitry.

3. RDA equipment shelter heating is controlled by Thermostat UD7S3 (AC#1) and Thermostat UD7S4 (AC#2). When the RDA equipment shelter temperature goes below the heater thermostat setting, the AC heater provides heating to maintain a minimum temperature of +50°F. See Figure FO1−3, sheets 3 through 8. An in−depth discussion of the heating function is covered in the paragraphs discussing the air conditioner functions.

4. MLOS shelter heating is controlled by a thermostat. When the MLOS shelter temperature goes below the heater thermostat setting, the 3.0 kW heater turns on to maintain a minimum temperature of +50°. See Figure 1−22 for the MLOS shelter heating circuitry.

1−3.3.2 Ventilation.

The ventilating function is discussed by separate functional areas. These areas are the radome, generator shelter, RDA equipment shelter, and MLOS shelter.

1. Radome ventilation uses a Radome Vent Fan Assembly UD11A2, a Motorized Damper UD11A1, and Temperature Thermostat UD2S2. When the temperature reaches 85°F, the Thermostat sends a signal to the Radome Supply Fan and the Motorized Damper which turns on the fan and causes the damper to open the vents. The airflow maintains the radome temperature within 9°F of the outside (exterior) temperature when temperature is over 85°F. Refer to Figure FO1−3, sheet 2 for the radome ventilation circuitry.

2. Generator shelter ventilation has two phases. Phase 1 ventilation occurs when the generator is not operating. Phase 2 ventilation occurs when the generator is running. Refer to Figure FO1−1 (Onan Generator) or Figure FO1−2 (Kohler Generator) for the generator shelter ventilation circuitry.

   a. Phase 1 ventilation occurs when the Vent Thermostat UD10S2 closes. When the thermostat closes, AC power is applied through generator run relay K11, NC contacts 1, 7, 2, and 8. The Exhaust Louver (Actuator) Motor (UD10A11B1) and Exhaust Fan Motor (UD10A11B2) are energized through relay K11, NC contacts 1 and 7, opening the Exhaust Damper Louvers and running the Exhaust Fan. The Intake Louver (Actuator) Motor (UD10A4B1) and heater lockout relay are energized through relay K11, NC contacts 2 and 8 opening the Intake Damper Louvers UD10A4 and opening the heater lockout relay (NC) contacts to remove AC voltage to the shelter heater.

   b. Phase 2 ventilation occurs upon starting and running the generator. The generator run relay K11 energizes, opening K11 contacts 1, 7, 2, 8, 3, 9 and de−energizing the Exhaust Louver Motor (Actuator) UD10A11B1, Exhaust Fan Motor UD10A11B2 and Intake Louver Motor (Actuator) UD10A4B1. K11 contacts 6 and 9 close, energizing the Intake Louver #2 Motor (Actuator) UD10A5B1 and Generator Exhaust Louver Motor (Actuator) UD10A3B1. K11 contacts 5 and 8 close, energizing the Intake Louver #1 Motor (Actuator) UD10A4B1 and opening the heater lockout relay (NC) contacts to remove any Vac to shelter heater, thereby preventing any heating operation.

3. RDA shelter ventilation is provided for the transmitter. When the Transmitter Vent Thermostat UD7S5 (Figure FO1−3, sheet 1, zone 5A) temperature setting of 85°F is reached, motor (actuator) controls are energized to open the Transmitter Intake and Exhaust Dampers UD7A9 and A10 to receive outside air through the intake dampers and emit air through the exhaust dampers to the outside. When the transmitter vent thermostat is open, temperature less than 85°F, the intake damper gets shelter air and the exhaust damper passes air into the shelter.

4. MLOS shelter ventilation circuitry uses an exhaust fan with motorized exhaust damper and a motorized intake damper. When the inside temperature reaches 72°F, the thermostat closes sending 120 Vac to the exhaust fan, exhaust damper actuator, and intake damper actuator to open the dampers and start the exhaust fan. See Figure 1−22 for the MLOS shelter venting circuitry.

1−3.3.3 RDA Equipment Shelter Air Conditioning.

Air Conditioners UD7AC1 and UD7AC2 are controlled by Thermostats UD7S3 and UD7S4, respectively. The thermostats determine if cooling or heating is required. Each air conditioner has circuitry for heating and cooling functions. However, only one air conditioner is prime with a 70−degree setting. The other air conditioner is considered a backup with a 75−degree setting. Depending upon the site locations, some air conditioners are equipped with an economizer which mixes or uses outside air, depending on ambient temperature and humidity.

1−3.3.4 RDA Equipment Shelter Air Conditioning without Economizer.

Refer to Figure FO1−3, sheets 3, 4, 6, and 7, and Table 1−6, for the heating and cooling air conditioner functions without an economizer.

1. In the heating cycle, the thermostat senses shelter heating is required. It sends a 24 Vac relay command to the heater contactor relay coils from W1 connector. This command turns on the indoor blower and energize the heaters. When the indoor blower motor relay energizes, contacts 2 and 4 close, applying LL1 voltage from voltage input LL1 at the compressor contactor and contacts 4 and 5 open. When the shelter temperature approaches the temperature setting, the thermostat heat anticipator turns off the heat so that a constant temperature is maintained at the thermostat heat setting.

2. In the cooling cycle, the thermostat senses that shelter cooling is required. It sends a 24 Vac relay command from connector G to the indoor blower motor relay coil pin 1. The relay energizes and closes contacts 2 and 4 and opens contacts 4 and 5, starting the indoor blower motor. A first stage cool 24 Vac command is sent from thermostat connector Y through low voltage terminal board pin Y to the compressor pressure cutoff switches. The compressor pressure cutoff switches passes the 24 Vac command via the latch and delay relay coils to the compressor contactor coil. The compressor contactor contacts close, applying three−phase power to the compressor and two−phase power to the outdoor blower motor. Once the shelter temperature reaches the thermostat cooling setting, the cooling cycle is turned off.

1−3.3.5 RDA Equipment Shelter Air Conditioning with Economizer.

Refer to Figure FO1−3, sheets 5 and 8, and Table 1−6, for air conditioner heating and cooling functions with economizer.

1. There are two models of economizer, one for each of the two models of air conditioner:

Air Conditioner	Economizer
WA60 (older model)	ECW−4A
WA601 or WA602 (new models)	EIFM−5A

The ECW−4A Economizer consists of an externally mounted intake hood which contains the return/outside air damper and exhaust subassembly and controls and harness. The intake hood is mounted on a blower and service−access panel. The economizer is controlled by an outdoor thermostat mounted internally in the hood. The two−stage Thermostat UD7S4 in the shelter sets inside temperature control (heating, first stage cooling, and second stage cooling) for the air conditioner with economizer. Return air filters and a filter grill complete the economizer kit.

2. The EIFM−5A Economizer consists of a single housing mounted within the air conditioner service access area. A service access panel contains the mist filter. An outdoor thermostat mounted internally to the air conditioner and two−stage Thermostat UD7S4 complete the economizer kit.

3. The air conditioners are designed to shutdown when outside ambient temperature falls to 0°F. However, at this temperature, the RDA equipment still generates sufficient heat as to require shelter cooling to maintain 70°F ambient temperature.

4. The air conditioner equipment with economizer uses cold outside air, when available, for first stage cooling. When the economizer enthalpy control senses that the outdoor air temperature and humidity is low enough to provide the shelter cooling, it closes the air return damper, opens the outdoor air and exhaust damper, and switches the blowers to on. A thermistor senses the temperature of the mixed inside/outside air and modulates the dampers via a damper motor to maintain the desired air supply temperature. The damper also shunts a portion of the return air to the outside to prevent status pressure buildup within the shelter and aids in maintaining the temperature of the mixed air. In the extreme position (0°F), the outside air damper fully opens and the return air is fully closed. The shelter receives 100 percent of its air supply from the outside and the return air is completely shunted to the outside. This is the economizer position used at selected cold weather sites. If the outside air becomes too warm or humid, the enthalpy control detects this condition and automatically closes the outdoor air damper and switches the compressor on.

1−3.3.6 TPMS Environmental Control System.

1. The Environmental Control System consists of a 2−ton wall mounted Environmental Control Unit (ECU) located on the end of the shelter (the Type 4 shelters have two 3−ton units: ECU #2 provides a heating and cooling function, while ECU #1 provides only a cooling function). This unit contains both a heating and cooling source and is controlled by an automatic change−over thermostat normally set at 75°F cooling and 65°F heating. This thermostat will call for heating or cooling as required by local conditions. The dual stage, lead−lag controller thermostat for the two 3−ton ECUs at Type 4 locations is also set to the 75°F cooling and 65°F heating. However, the thermostat has an internal, factory−set setting of +3°F, and once reached, will call for the second ECU to provide additional cooling. The 75° setting is required for maintaining the batteries in an ambient near 77°F for maximum life. Batteries operated in hot environments will have a considerably shorter life.

2. This ECU is equipped with an “economizer” feature that allows the circulation of outside air into the shelter when outdoor air conditions are suitable. This reduces the need for mechanical cooling and will save energy and increase compressor life. In Type 4 shelters, only ECU #2 is equipped with the economizer feature.

3. The economizer setting is factory set at the “D” position which corresponds to 58°F at 50% relative humidity. It is adjustable between 53°F (full counterclockwise) and 78°F (full clockwise). There are settings in between as follows. These are also dependent on the 50% relative humidity.

   The economizer circuitry is also connected to the Hydrogen Detector. Once the Hydrogen Detector detects the presence of hydrogen in the shelter, it commands the ECU economizer to open the louvers to vent the shelter.

4. After the enthalpy control has activated and outside air is being brought into the shelter, the mixed air sensor measures the temperature of the air and then modulates the economizer damper to mix the correct proportion of cool outside air with the warm indoor air to maintain 50−56°F air delivered to the shelter.

5. There is also a time delay feature that prevents the compressor from restarting immediately after a power interruption. This delay is adjustable from 0.2 − 8 minutes and will be field set at 3 minutes.

6. There are two additional thermostats associated with monitoring the interior temperature of the shelter, the Shelter High Temperature Alarm Thermostat UD60A3A1 and the Shelter High Temperature Shutdown Thermostat UD60A2A8. In the Type 1, 2, and 4 shelters, the alarm thermostat is located above the Alarm Termination Panel and the shutdown thermostat is located near the Hydrogen Detector UD60A10. In the Type 5, 6, and 9 shelters, both thermostats are located above the Alarm Terminal Panel. The function of each thermostat is as follows:

   a. The Shelter High Temperature Alarm Thermostat UD60A3A1 actuates at 80°F rising to open its contact and activates the “TPS OFF” alarm to the RDA. The purpose of this alarm is to alert the operator that a degraded environmental condition exists. The battery life degrades when ambient temperatures are at/above 80°F.

   b. The Shelter High Temperature Shutdown Thermostat UD60A2A8 actuates at 90°F rising to close its contact. The thermostat contact is connected into the TPS control circuitry to initiate a transfer to BYPASS mode and shutdown of the TPS.

1−3.4 FIRE DETECTION SUBSYSTEM.

The Fire Detection Subsystem provides fire detection for the generator shelter, RDA equipment shelter, and MLOS shelter. It alerts personnel when a fire/smoke condition exists. The actual Fire Suppression Subsystem that once consisted of a Halon storage cylinder has been removed until a suitable replacement fire suppression chemical for Halon has been found. Each site should have a portable fire extinguisher in the RDA equipment shelter, generator shelter, TPMS shelter, and MLOS shelter for fire suppression.

1−3.4.1 Generator Shelter Fire Detection.

When the generator shelter Thermal Detector UD10A8 senses a rapid rising temperature or a temperature exceeding 190°F, the thermal contact closes and a fire alarm message occurs. Refer to Figure 1−23 for the generator shelter fire detection circuitry.

Table 1−6. RDA Site Air Conditioner Setup

	Without an Economizer		With an Economizer*	
	AC1	AC2**	AC1	AC2
	Primary	Secondary	Secondary	Primary
Thermostat Settings				
Cooling Set Point Lever	70º	75º	75º	70º
Heating Set Point Lever	55º	50º	50º	55º
System Switch	AUTO	AUTO	AUTO	AUTO
Fan Switch	AUTO	AUTO	AUTO	AUTO
Outlet Vent Positions				
Horizontal Louvers	Straight out	Straight out	Straight out	Straight out
Vertical Louvers	Diagonally toward thermostats	Straight out	Diagonally toward thermostats	Straight out
				Set Enthalpy Control to "D"

* Cold weather sites with an economizer in AC2 must be setup as specified during fall/winter seasons. Thermostat settings can be reversed in warm weather (spring/summer) to run AC1 as primary air conditioner.

** Used as backup air conditioner. Reverse thermostat settings every six months to ensure equal run times between air conditioners.

1−3.4.2 RDA Equipment Shelter Fire Detection.

The RDA equipment shelter Fire Detection Subsystem (Refer to Figure 1−24) receives 120 Vac single−phase power from the Secondary Power Distribution Panel UD7A3, and converts this power to 24 Vdc for external alarm and control devices. The control circuitry operates all detection, manual discharge and abort stations, and the audible and visual output circuits. When either smoke/fire detector, Photoelectric Detector UD7A17 or Ionization Detector UD7A23, senses smoke/fire, the system trouble relay contacts 26 and 27 open, causing a Fire Detection Subsystem trouble alert via Alarm Termination Panel UD7A1 TB2 pin 7. In addition, the following events occur:

1. The shunt trip circuit closes, causing the Main Power Distribution Panel UD7A2 main power (200A) circuit breaker to open, removing power to all RDA shelter non−critical equipment. At the same time, the Fire Detection System Control Panel normally closed contacts of relay K5 and pins 34 and 36 open, thus de−energizing the Magnetic Contactor UD7S6 coil control circuit, removing all critical TPS power to the Secondary PDP UD7A3.

2. A system trouble alarm (RDA fire alarm) is initialized via UD7A1 TB2 pin 7.

3. With all shelter power removed, the Fire Detection System uses the Fire Detection Subsystem control panel 24 Vdc battery backup power.

4. The Alarm Horn UD7A4 sounds.

5. The Alarm Strobe Light UD7DS1 flashes (strobes). The strobe light circuitry is slaved to the audio circuitry so when the PUSH TO SILENCE switch is pushed, the horn and strobe light cease to function.

1−3.4.3 MLOS Shelter Fire Detection.

When the MLOS shelter Ionization Smoke/Fire Detector senses smoke/fire, the detector contacts close, causing a fire alert to occur.

1−3.5 SECURITY AND AUXILIARY SUBSYSTEM FUNCTION.

The security and auxiliary function provides security and environmental information (data) to the RDADP for processing. It provides security violation data, aircraft warning lights condition data, as well as various types of air sensor data.

1−3.5.1 Security Subsystem.

Refer to Figure 1−25. The Security Subsystem Transformer T1 receives 120 Vac via power switch (PS) from the Main Power Distribution Panel UD7A2 CB41 (Figure FO1−3, sheet 1, zone 6A). The T1 transformer 28 Vac output provides the following:

1. Relay K3 energizes to maintain the K3 equipment trouble contacts open.

2. With the key switch (KS) open, relay K2 remains de−energized, keeping the K2 authorized entry contacts open and the 28 Vac contacts closed.

3. Relay K1 remains de−energized, keeping the K1 unauthorized entry contacts open.

4. When the tamper switch (TS) closes, K1 is energized, closing the unauthorized entry contacts and sending an unauthorized entry alert to the DAU.

5. When the RDA shelter, tower, MLOS shelter, Transition Power Maintenance shelter, or generator shelter door is open with the key switch (KS) open, the associated magnetic switch closes, energizing relay K1. Relay K1 unauthorized entry contacts close and send an unauthorized entry alert to the DAU. 28 Vac passes K1 contacts through the reset switch (RST) to keep K1 energized. Press Reset (RST) with all doors closed to de−energize K1.

6. Closing the key switch (KS) energizes relay K2. Relay K2 authorized entry closes sending authorized entry alert to the DAU. Relay K2 28 Vac contacts open, removing 28 Vac to the tamper switch, RDA Shelter Contact Switch UD7S1, Tower Gate Alarm Magnetic Contact Switch UD11S1, Generator Shelter Alarm Magnetic Contact Switch UD10S3, and TPMS Magnetic Contacts UD60A6A1, A2, and A3.

7. To remove the unauthorized entry alert, press the RST switch.

1−3.5.2 Auxiliary Subsystem.

Refer to Figure 1−26, Figure 1−27, and Figure 1−28. The Auxiliary Subsystem provides input data from the RDA Shelter Temperature Sensors UD7A18, A19, A20, A21, and A22, Generator Shelter Temperature Sensor UD10A7, Radome Temperature Sensor UD2A10, and Fuel Level Sensor UD10A6A1 (see Figure 1−26), Clogged Filter Indicators UD7A14, A15, and A16 (see Figure 1−27), and the aircraft warning lights for MLOS and radar towers (see Figure 1−28). The subsystem equipment performs the following functions:

1. The Temperature Sensors (Figure 1−26) return a Vdc proportional to the measured temperature. The temperature range for each sensor varies in accordance with its function. Refer to Table 1−7 for temperature range for each sensor.

2. The Fuel Level Sensor (Figure 1−26) returns a portion of the DC current proportional to the level of the fuel in the fuel tanks. Refer to paragraph 3−6.6 for the fuel level sensor calibration check/adjustment procedure or NWS EHB 6−551−7 for additional information on the fuel sensor.

3. The Clogged (dirty) Filter Indicator − when the filter becomes clogged, the suction increases above the filter causing air to be pulled through the suction port on the back of the indicator. This increased suction (pressure) closes the pressure switch (Figure 1−27) when the pressure is greater than the calibrated set point of the indicator. When the pressure switch closes, the red clogged filter flag drops, and clogged filter alert is sent to the DAU. Reset the flag by turning the red button CW.

4. The Aircraft Warning Light − the aircraft warning light circuitry receives 120 Vac at the Radome, from the Main Power Distribution Panel UD7A2 CB19. If one of the two aircraft warning lamps is malfunctioning, the aircraft warning circuitry sends alert data to the DAU (Figure 1−28).

Table 1−7. Temperature Sensor Temperature Range

Item	Nomenclature	UD No.	Temperature Range
1	Air Conditioner Discharge Air Temperature Sensor	UD7A18 UD7A19	32° to 122°F
2	RDA Equipment Shelter Interior Air Temperature Sensor	UD7A20	32° to 122°F

Table 1−7. Temperature Sensor Temperature Range − Continued

Item	Nomenclature	UD No.	Temperature Range
3	Transmitter Discharge Air Temperature Sensor	UD7A21	14° to 140°F
4	Exterior Air Temperature Sensor	UD7A22	−58° to 120°F
5	Generator Shelter Interior Air Sensor	UD10A7	32° to 122°F
6	Radome Interior Air Temperature Sensor	UD2A10	−58° to 122°F

1−3.6 RADOME, TOWER, AND SHELTER SUPPORT SUBSYSTEM FUNCTIONS.

The Radome, Tower, and Shelter Support Subsystem functions provide environmental protection, housing, operational support, environmental sensors and controls, and power distribution. The functional operation of each radome, tower, and shelter function is discussed in subsequent paragraphs.

1−3.6.1 Radome.

The radome provides an environmental protection function which permits operating in and withstanding the environmental conditions listed in Table 1−5 and operates as follows:

1. No significant degradation in performance occurs in instantaneous rain rates up to 300 mm per hour with maximum wind speeds to 18m/sec.
2. No degradation of performance occurs in a salt laden atmosphere.
3. Full performance occurs in blowing fine sand and dust particles with wind speeds up to 18m/sec.

The radome electromagnetic performance function provides operation over the frequency band from 2.7 to 3.0 GHz with a maximum transmission loss of .25 dB. The VSWR of the radome is 1.5:1 or less over the operating frequency band (2.7−3.0 GHz). When operating during rainfall, the radome transmission loss increases by less than .25 dB.

The radome supports the aircraft warning lights circuitry and provides access door for servicing the lights.

1−3.6.2 Radar and MLOS Towers.

The radar tower performs the antenna/pedestal and radome support function, while the MLOS tower provides the MLOS antenna support function. Both towers provide the elevation necessary to meet the transmission performance. The radar tower support function provides:

1. A mounting surface for the radome to be level within 0.1 degrees.
2. A mounting surface at the center of the tower for the radar antenna/pedestal. The mounting surface is level within 0.5 degrees.
3. A maximum tower elevation deflection less than 0.2 degrees at 25 meters per second wind velocity or 0.75 degrees at 50 meters per second wind velocity.
4. A maximum tower azimuth deflection less than 0.2 degrees at 25 meters per second wind velocity or 0.75 degrees at 50 meters per second wind velocity.
5. A radome entry hatch with safety interlock to prevent pedestal operation and antenna radiation.
6. Radome venting openings with devices for venting the radome.
7. Waveguide and cable run mounting surfaces.
8. MLOS Antenna mountings for parabolic antennas when required.
9. The radar tower environmental function operates in –40°C to +49°C temperature with 15−100% humidity at altitudes to 3300 meters above mean sea level. No significant operational performance degradation occurs with rainfall in instantaneous rain rates up to 300 mm per hour in maximum wind speeds to 18 meters per second. It provides continuous operation in a salt laden atmosphere as well as full operation in blowing fine sand and dust particles with wind speeds up to 18 meters per second.
10. The lightning protection function has a lightning conductor ring with down leads along each leg of the tower to ground rods ten feet from the base of the tower.

1−3.6.3 Shelters.

The RDA site shelter types are RDA Equipment Shelter UD7, Generator Shelter UD10, MLOS Shelter UD13, and Transition Power Maintenance Shelter UD60. Each shelter has a support function, an environmental function, and a grounding function.

1. The RDA equipment shelter support function includes HVAC, lighting, security, fire detection, waveguide and cable ports, and hoist support point.
2. The RDA equipment shelter environmental function provides the operational capability without degradation as follows:
   a. The exposed equipment operates in the outdoor environment of –40°C to +49°C at 15−100% humidity up to 3300 meters above mean sea level.

b. The indoor equipment operates in the indoor environment of +10°C to +35°C at 20−80% humidity up to 3300 meters above mean sea level.

c. No significant degradation in operational performance occurs in an instantaneous rain rate up to 300 mm per hour with wind speeds up to 18 meters per seconds.

d. No significant degradation in operational performance occurs in a salt laden atmosphere or blowing fine sand and dust particles with wind speeds up to 18 meters per second.

3. The generator shelter support function includes heating and ventilation, lighting, security, fire detection, cable entry ports, diesel storage tank and fuel system, power generation and distribution.

4. The generator shelter environmental function provides an operational capability without degradation as follows:

a. The operational criteria for temperature and humidity is for operation in –40°C to +49°C temperature with humidity from 15 to 100% up to 3300 meters above mean sea level.

b. No significant degradation in operational performance occurs in a salt laden atmosphere or blowing fine sand and dust particles with wind speeds up to 18 meters per second.

c. No significant degradation in operational performance occurs in an instantaneous rain rate up to 300 mm per hour with wind speeds to 18 meter per second.

5. The MLOS shelter support function includes heating and venting, lighting, fire detection, cable entry ports and support, and power distribution.

6. The MLOS shelter environmental function provides an operational capability without degradation as follows:

a. The shelter operates without degradation in –40°C to +49°C temperatures with humidity from 15−100% humidity up to 3300 meters above mean sea level.

b. No significant degradation in operational performance occurs in an instantaneous rain rate up to 300 mm per hour with wind speeds to 18 meters per second.

c. No significant degradation in operational performance occurs in a salt laden atmosphere or blowing fine sand and dust particles with wind speeds to 18 meters per second.

7. The MLOS shelter grounding function provides a grounding ring around the interior periphery of the shelter. This grounding ring is connected to two external grounding points to permit connection to grounding rods.

8. The TPMS support function includes heating and cooling, lighting, security, cable entry ports, power generation, and distribution.

9. The TPMS environmental function provides an operational capability without degradation as follows:

   a. The operational criteria for temperature and humidity is for operation in the −40°C to +49°C temperature and with humidity from 5% to 90%.

   b. No significant degradation in operational performance occurs in an instantaneous rain rate up to 300 mm per hour with a maximum wind speed of 18 meters per second.

   c. No significant degradation in operational performance occurs in a snow and ice loading rate of 235 kilograms per square meter.

10. The TPMS comes in two basic shelter versions; the original TPMS with two rooms, three doors, and three wall−mounted disconnect switches and the newer one room, one door design with a Maintenance Bypass Module Cabinet to replace the wall−mounted disconnect switches. In addition to the shelter design differences, the type of shelter, currently Type 1 through 9, is dependent on the basic shelter design and other options that may be installed, such as electric toilet, 2−ton ECU versus two 3−ton ECUs, no air conditioning function, or de−sheltered TPS (the Type 8 TPS equipment is installed in the RDA shelter at six of the nine NWS Redundant sites). Refer to Table 1−8 for a matrix of the TPMS types and options.

Table 1−8. TPMS Type Matrix

	TYPES								
OPTIONS	**1**	**2**	**3***	**4**	**5**	**6**	**7***	**8***	**9**
Two Room Floor Plan	X	X	X	X					
One Room Floor Plan					X	X	X		X
Wall−Mounted Power Disconnect Switches UD61A5S1, S2, and S3	X	X	X	X					
Maintenance Bypass Module UD63					X	X	X	X	X
2−Ton ECU	X	X			X	X			X
3−Ton ECU (2 each)				X			X		
Ventilation System			X						
Electric Toilet	X			X	X		X		X
De−Sheltered TPS (TPS in RDA Shelter)								X	
Number of Sites	54	31	2	3	12	39	1	6	1

* NWS Redundant Sites

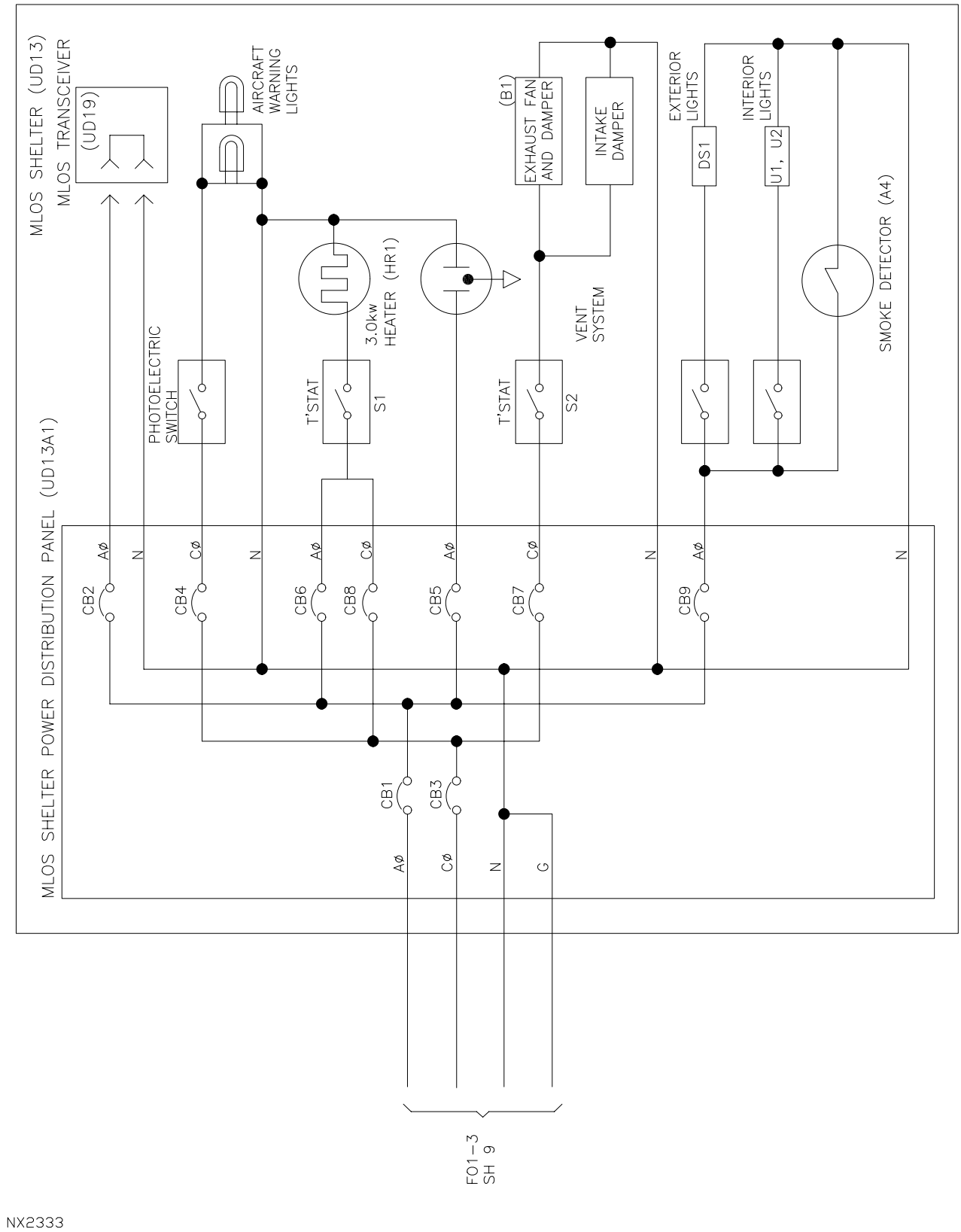

Figure 1−22. MLOS Shelter Vac Distribution

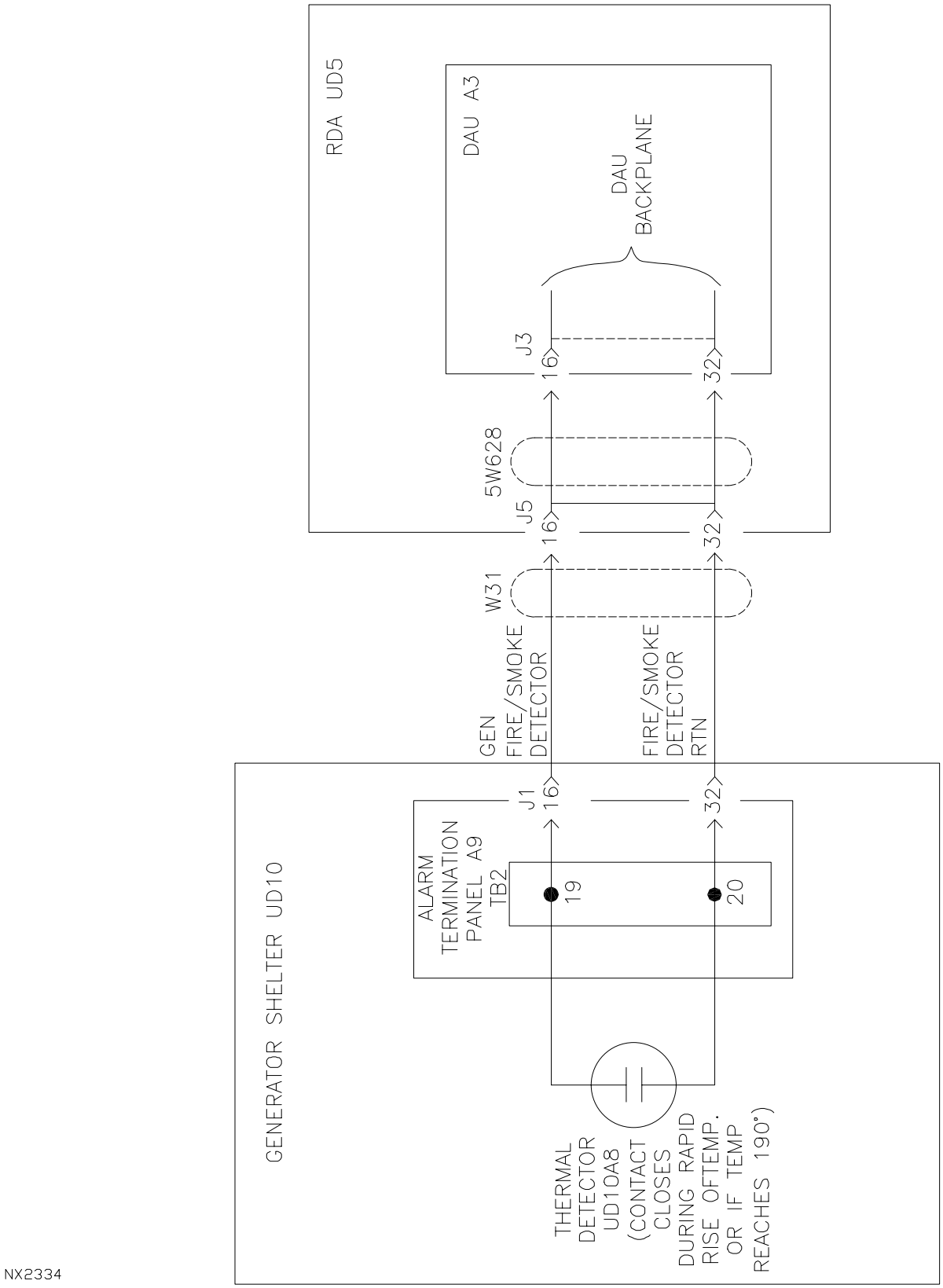

Figure 1−23. Generator Shelter Fire Detection Circuitry

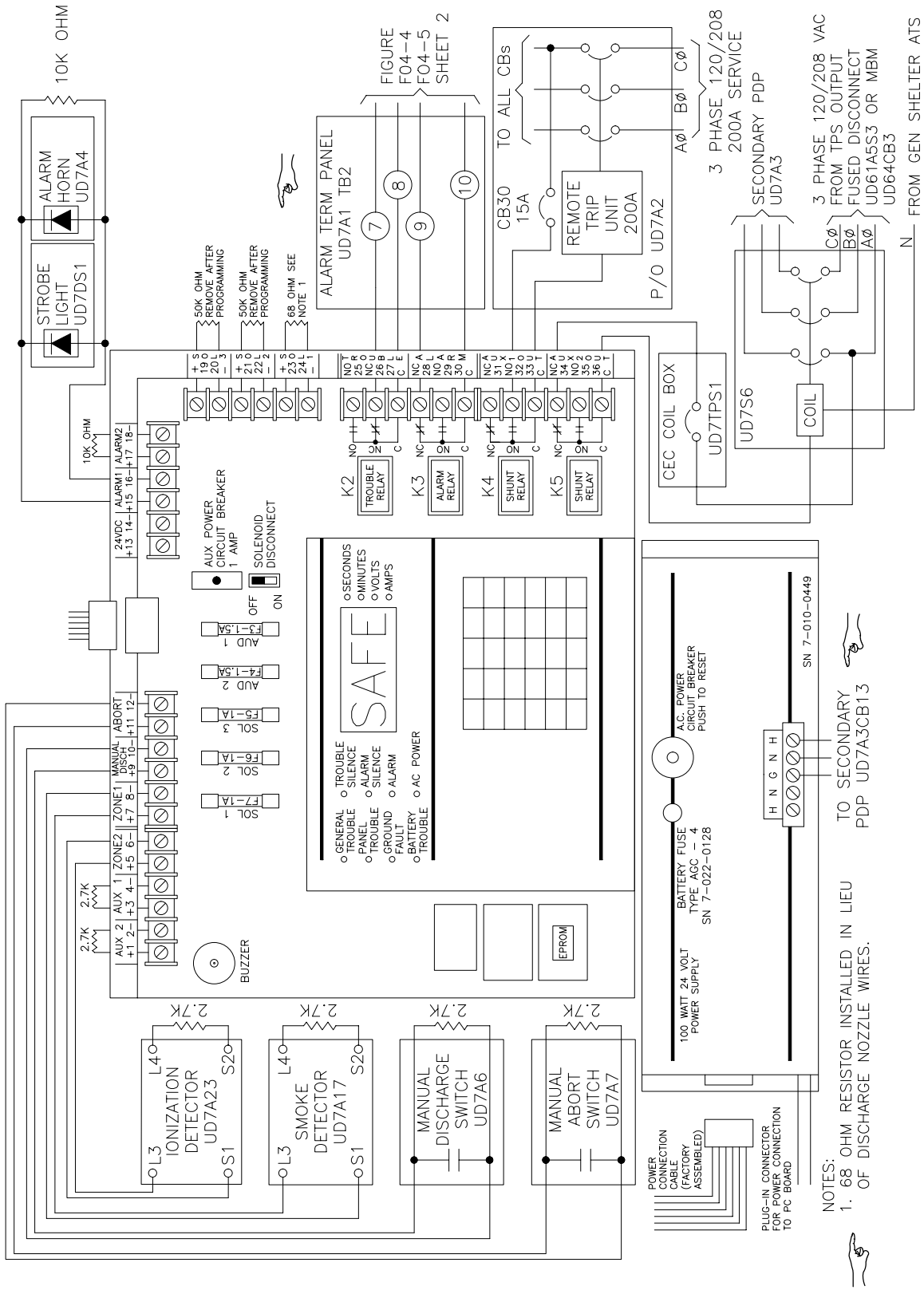

Figure 1−24. RDA Equipment Shelter Fire Detection System Circuitry

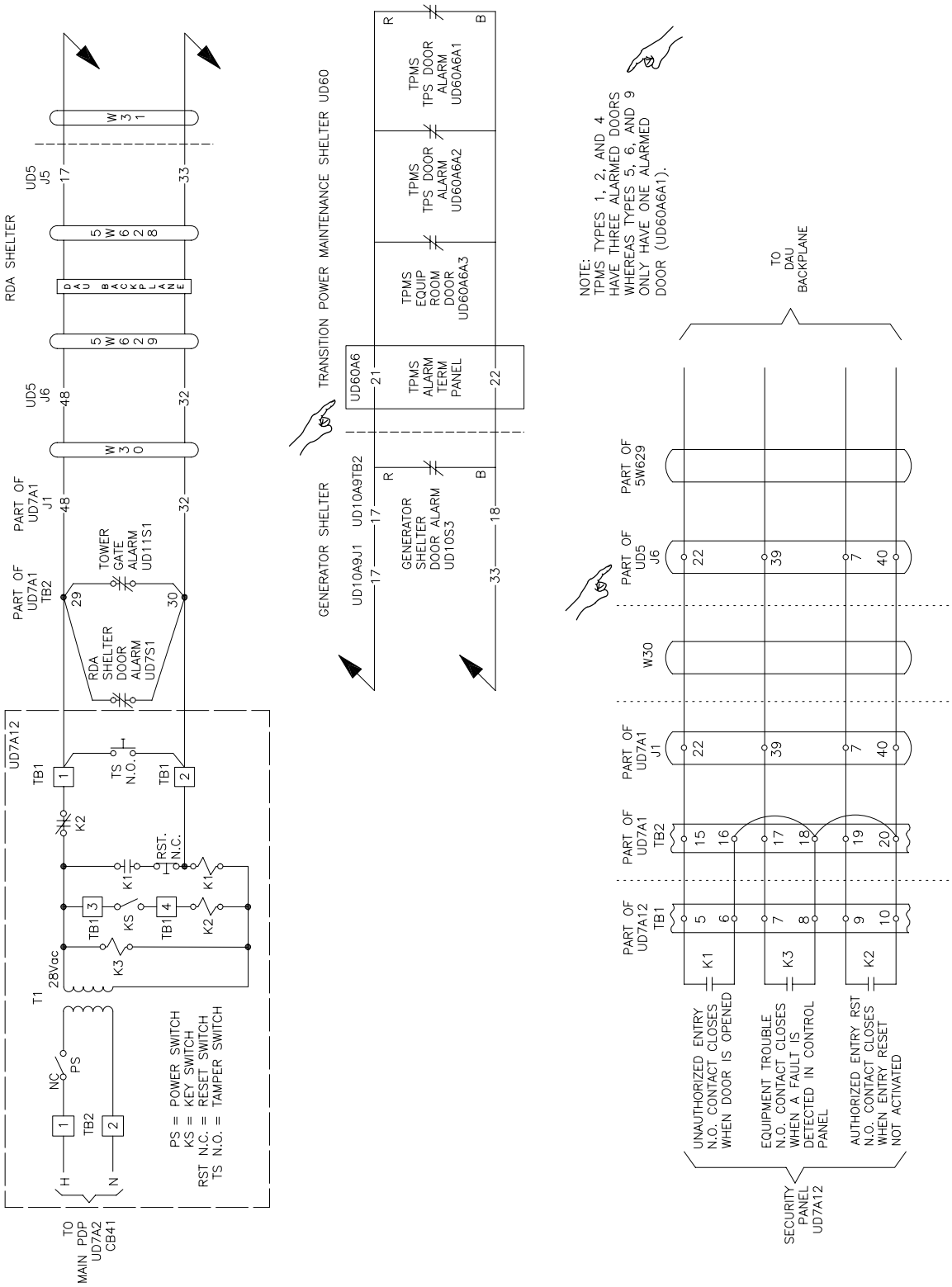

Figure 1−25. Security Panel Diagram

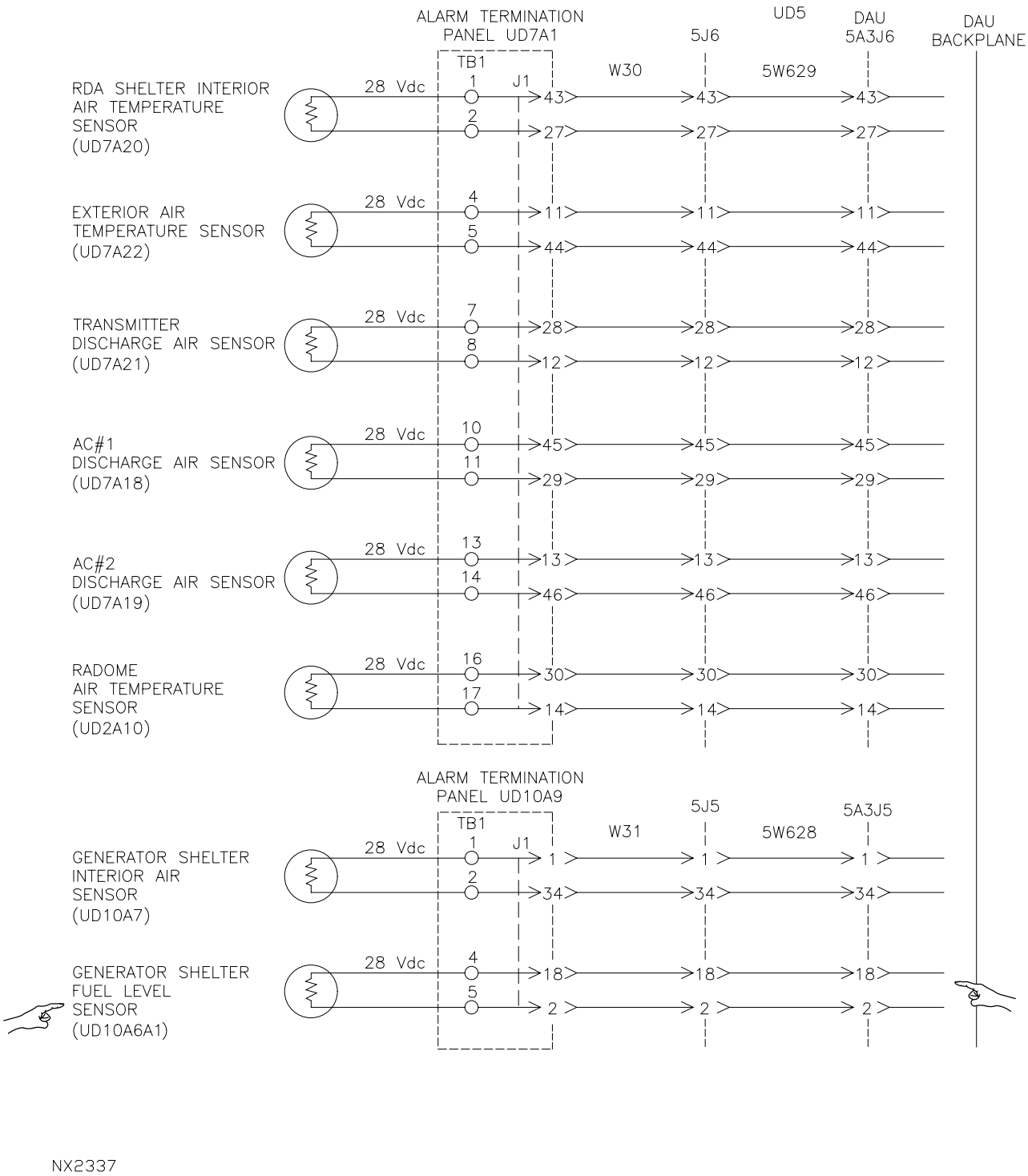

Figure 1−26. Temperature and Fuel Level Sensor Diagram

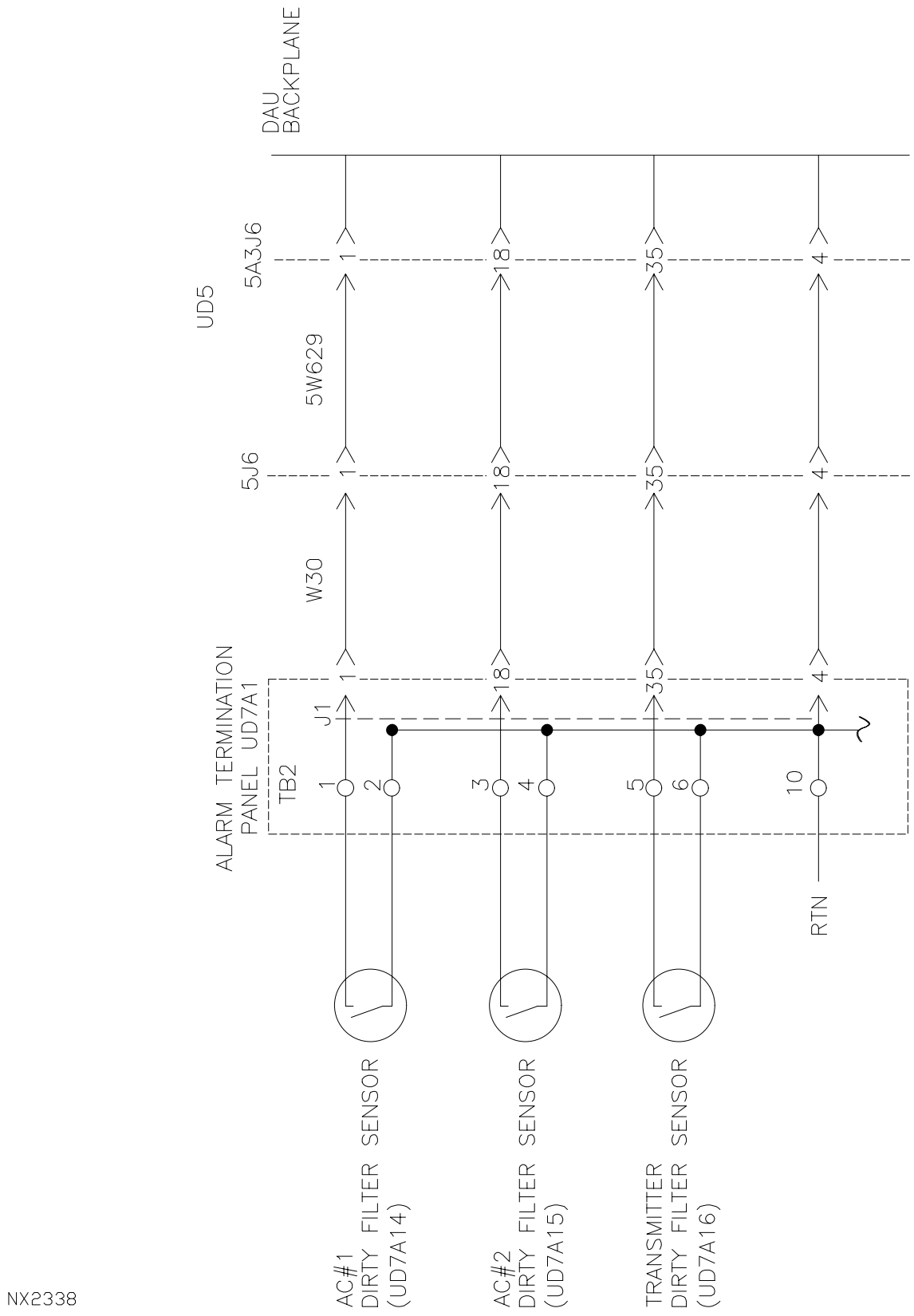

Figure 1−27. Dirty Filter Sensor (Indicator) Diagram

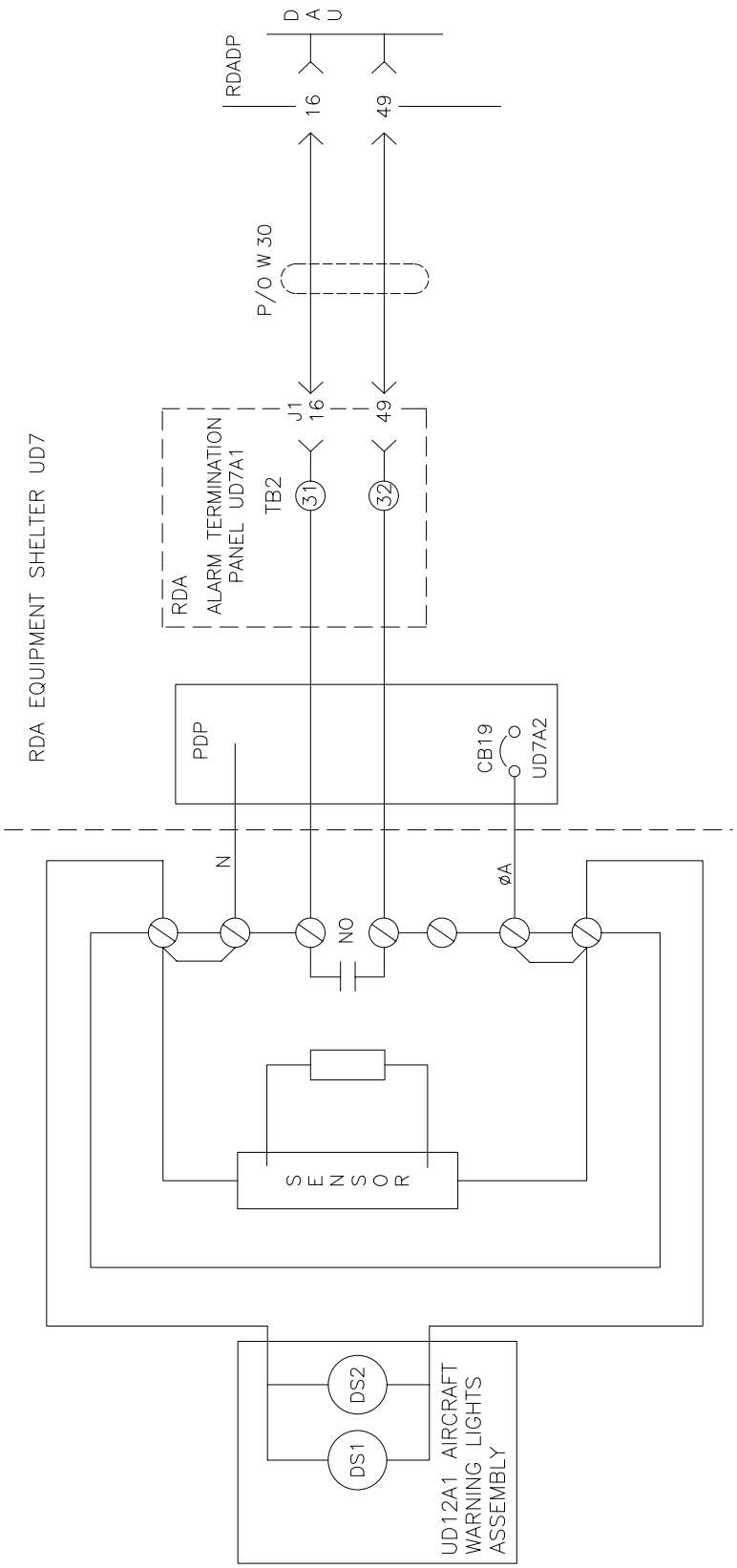

Figure 1−28. Aircraft Warning Light Circuitry Diagram

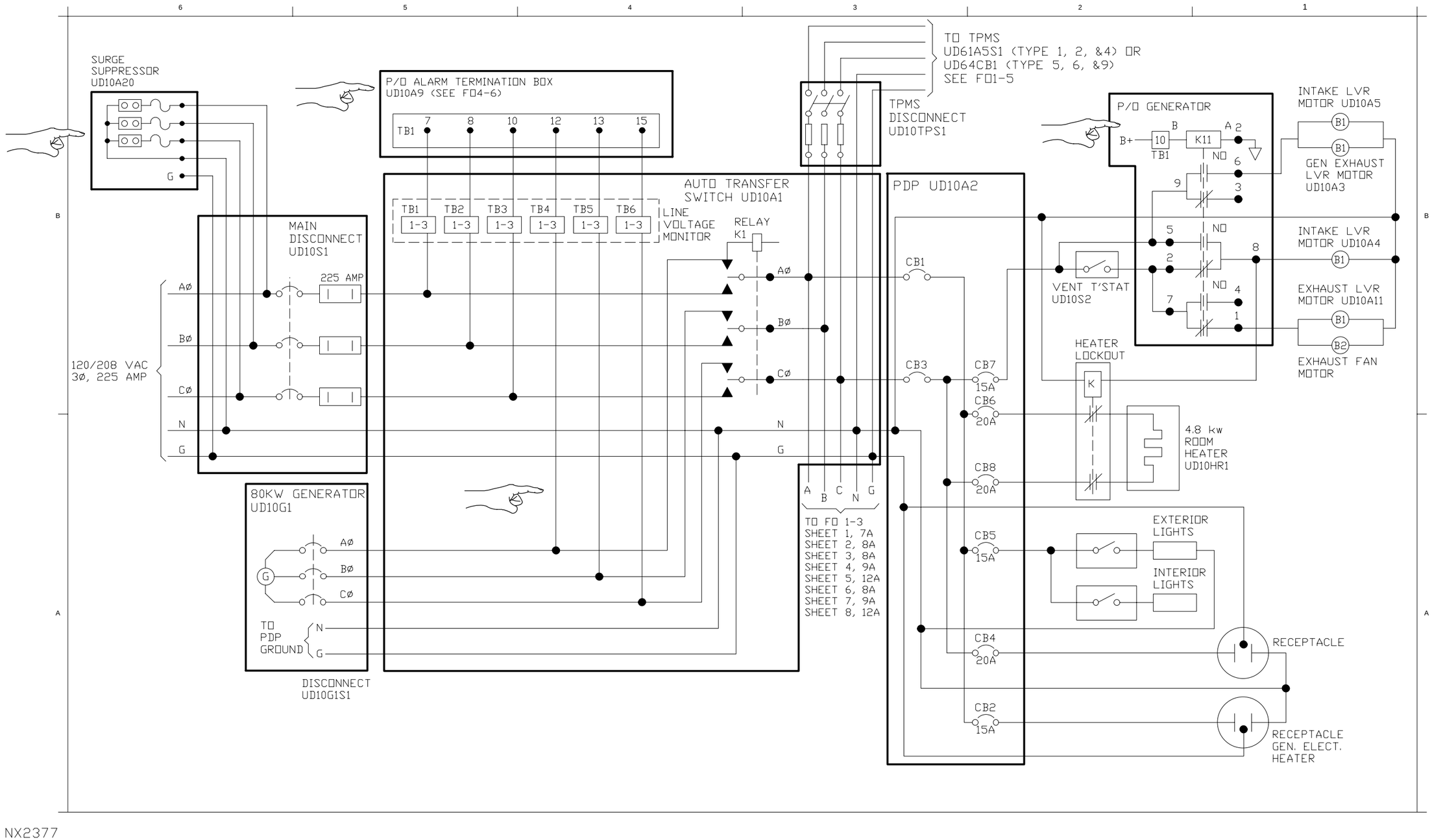

Figure FO1-1. Generator Shelter Power Distribution (Onan Generator)

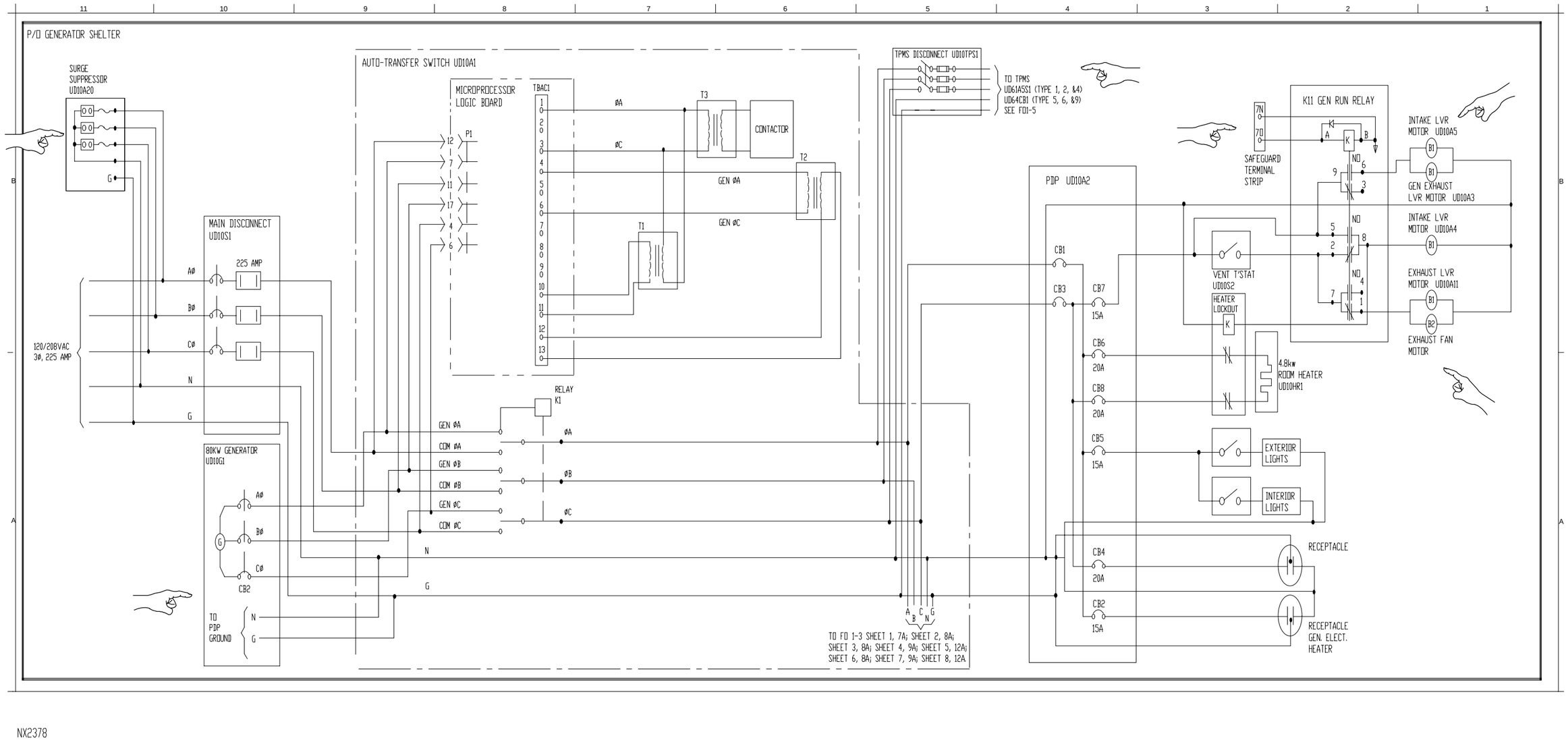

Figure FO1-2. Generator Shelter Power Distribution (Kohler Generator)

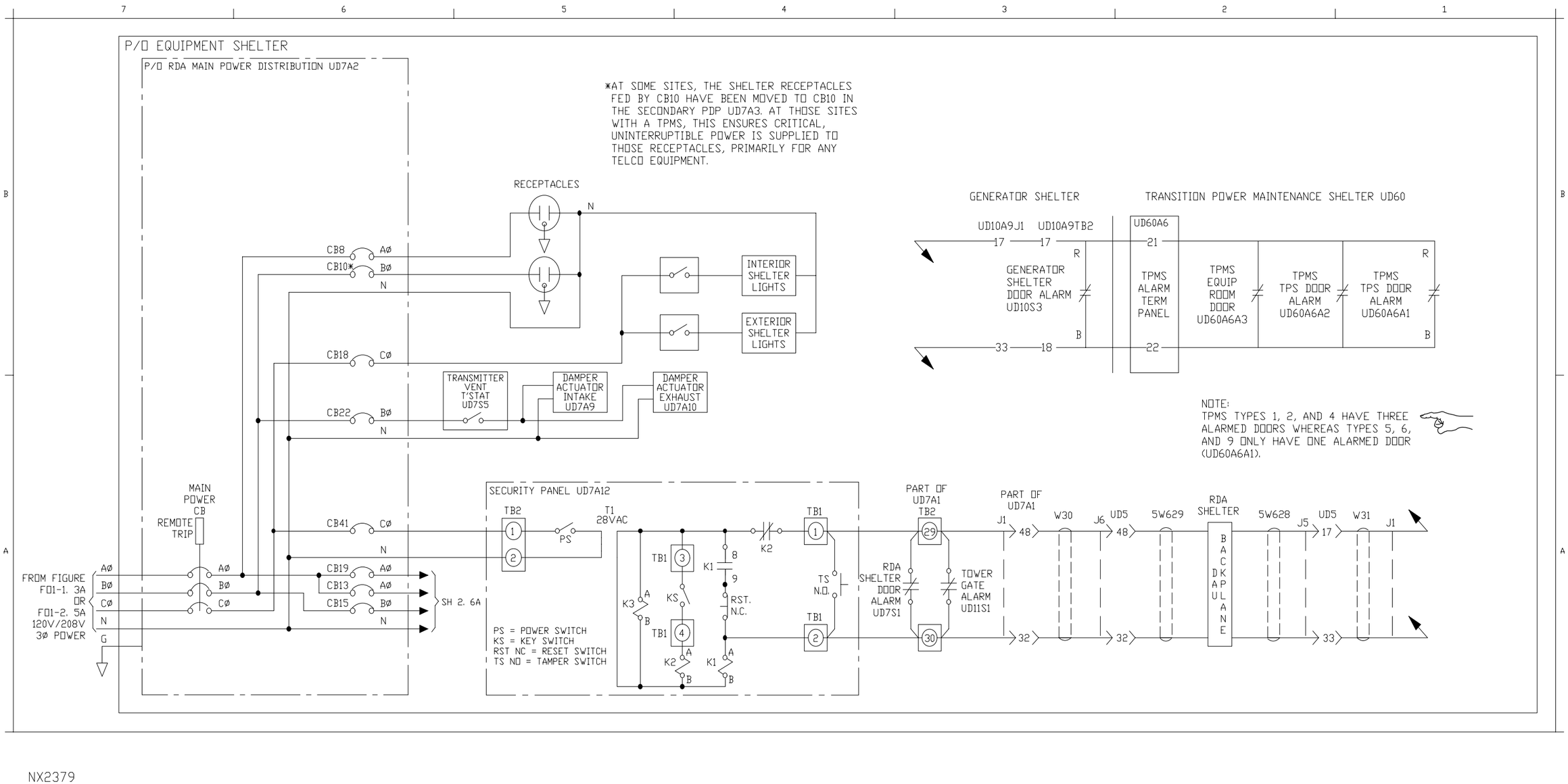

Figure FO1-3. RDA Equipment Shelter Power Distribution (Sheet 1 of 11)

NOTES:

1. RADOME HEATERS HR1, HR2, AND HR3 ARE SITE DEPENDENT. EACH SITE CAN HAVE FROM 0 TO 3 HEATERS. EACH HEATER IS CONNECTED TO THEIR OWN FUSIBLE DISCONNECT SWITCH.

2. WHEN A TRANSITION POWER MAINTENANCE SHELTER IS INSTALLED, POWER TO THE MAGNETIC CONTACTOR IS FROM THE TRANSITION POWER SOURCE AS SHOWN ON FIGURE FO1-5. CB26 IS SPARED AND CB38, 40, AND 42 SUPPLY POWER TO THE TPMS SHELTER POWER DISTRIBUTION SYSTEM PANEL UD60A5.

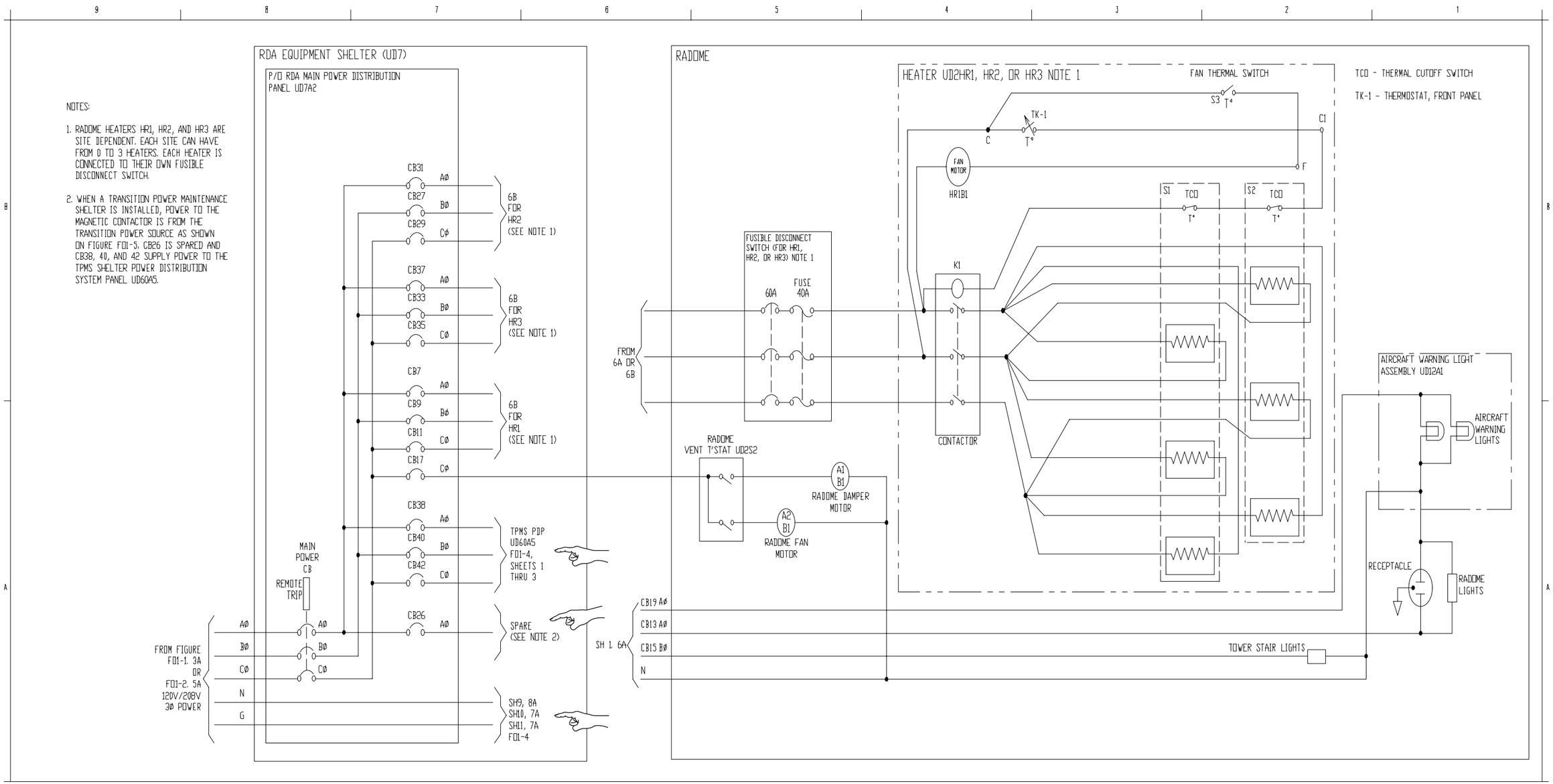

Figure FO1-3. RDA Equipment Shelter Power Distribution (Sheet 2 of 11)

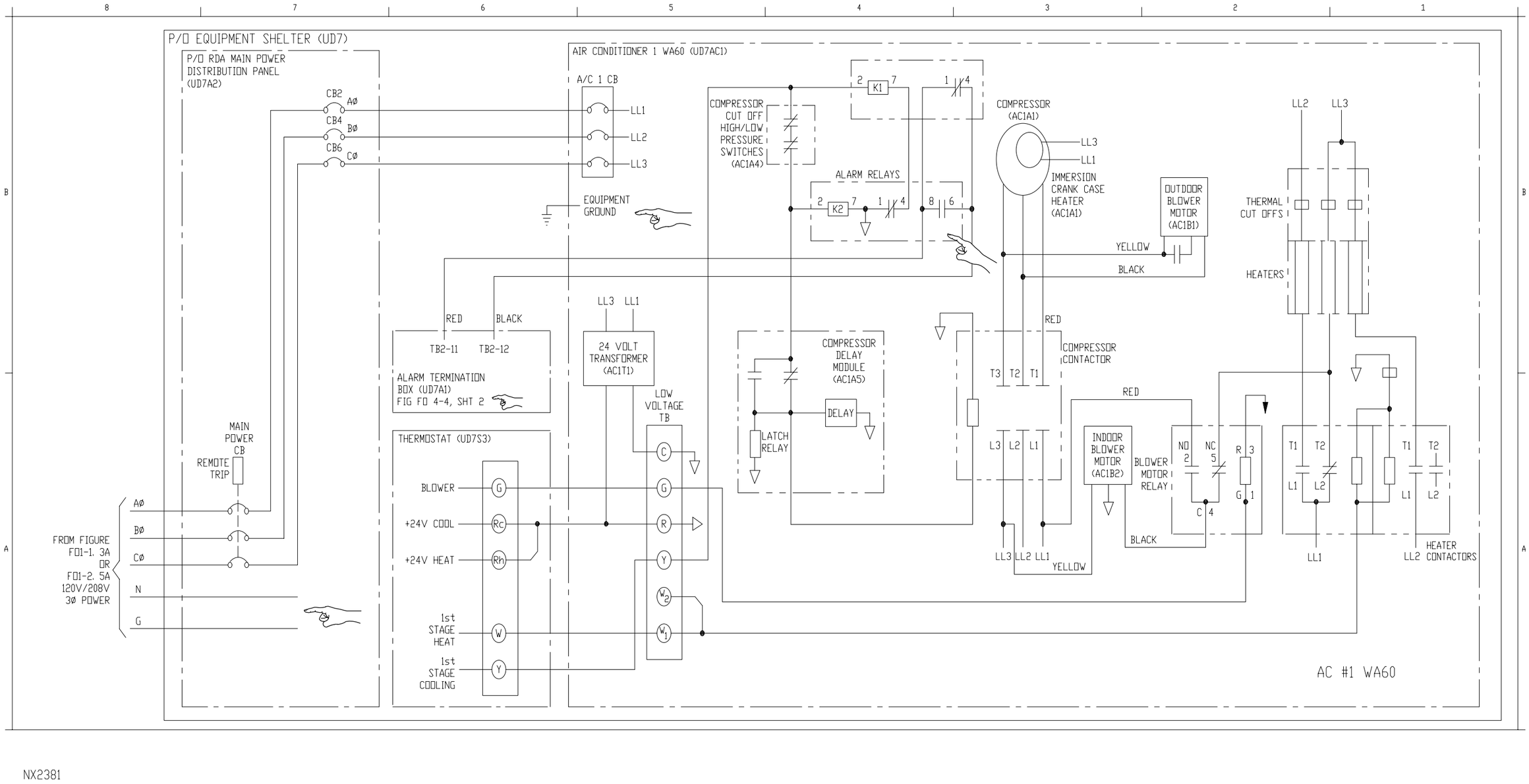

Figure FO1-3. RDA Equipment Shelter Power Distribution (Sheet 3 of 11)

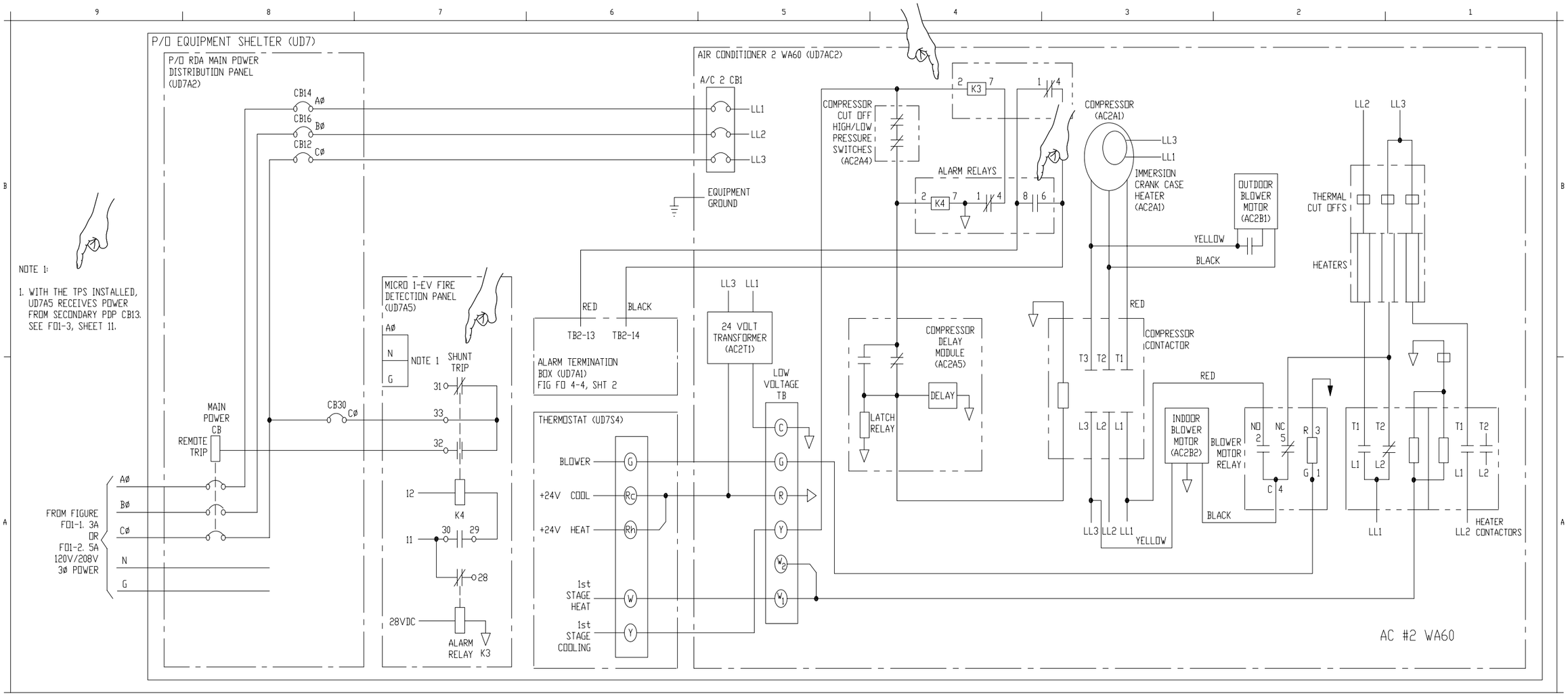

Figure FO1−3. RDA Equipment Shelter Power Distribution (Sheet 4 of 11)

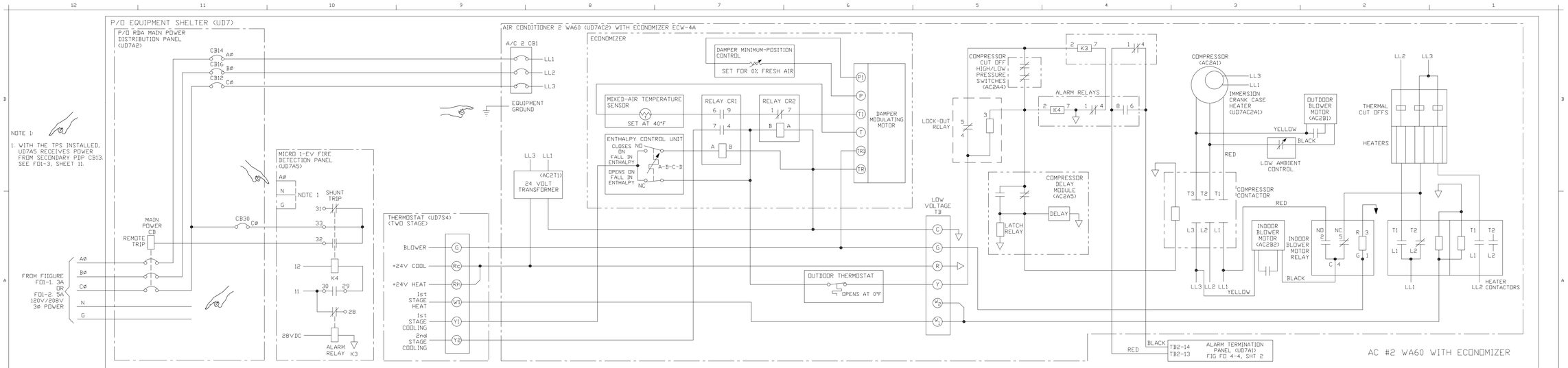

Figure FO1-3. RDA Equipment Shelter Power Distribution (Sheet 5 of 11)

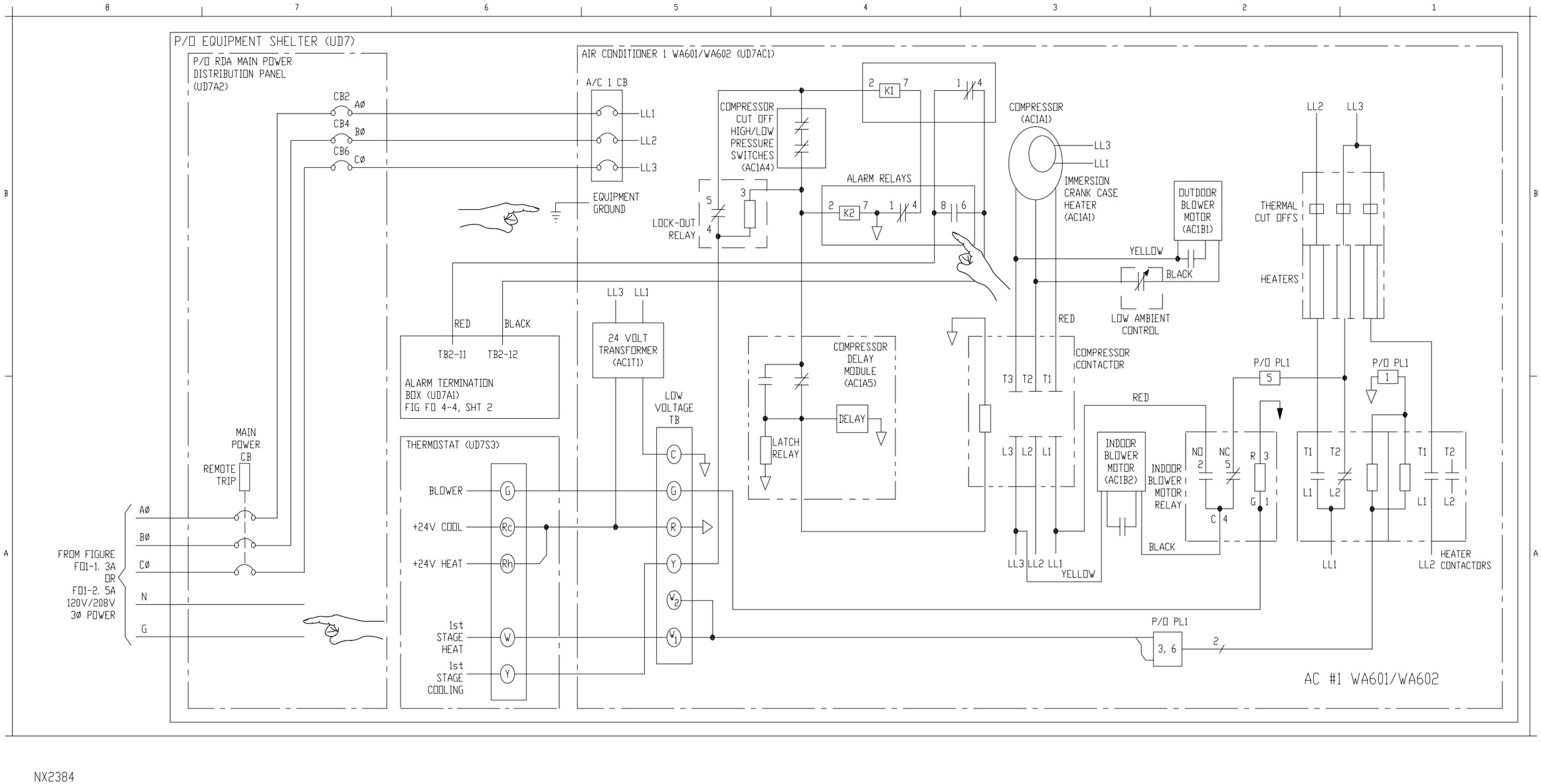

Figure FO1−3. RDA Equipment Shelter Power Distribution (Sheet 6 of 11)

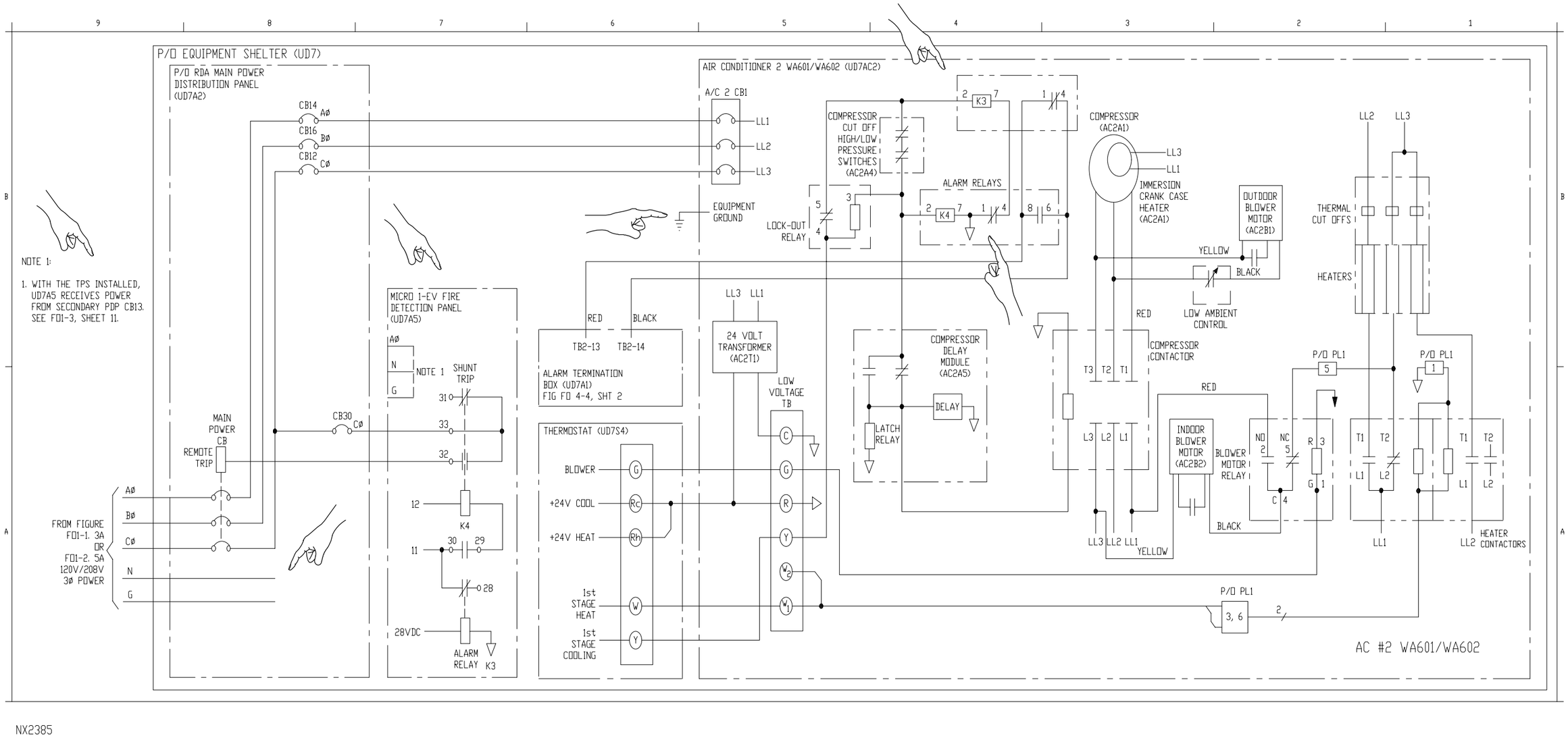

Figure FO1-3. RDA Equipment Shelter Power Distribution (Sheet 7 of 11)

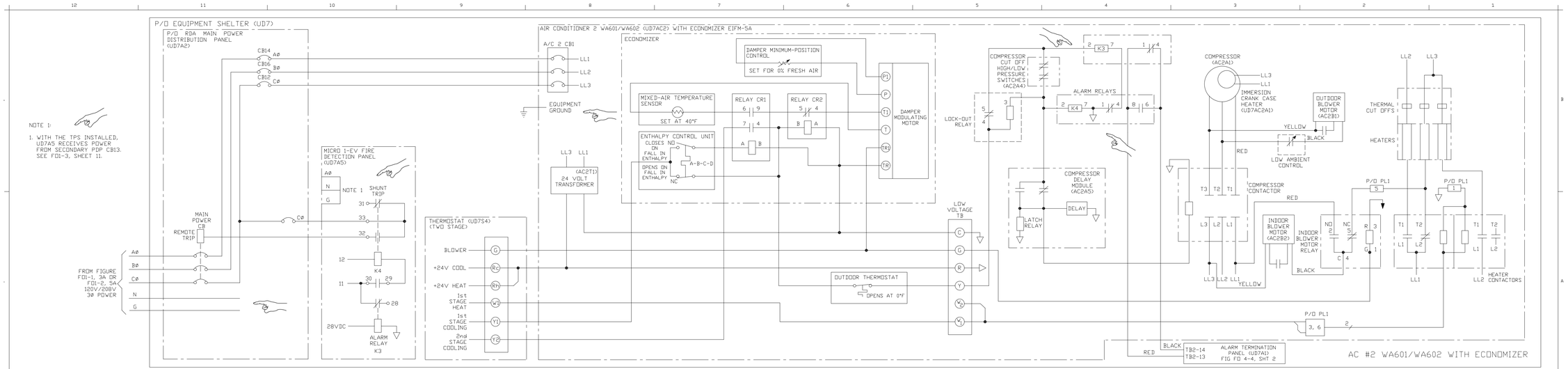

NX2386

Figure FO1-3. RDA Equipment Shelter Power Distribution (Sheet 8 of 11)

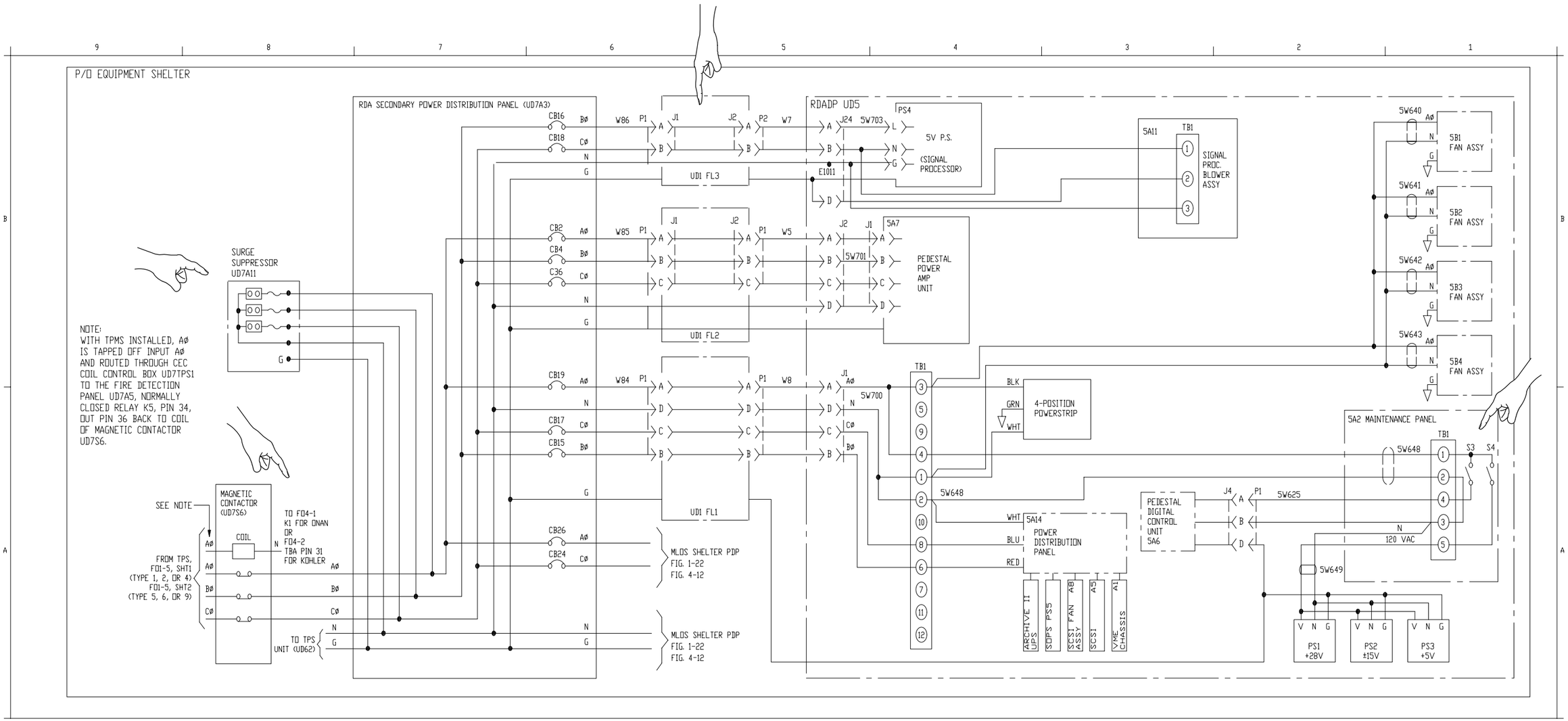

Figure FO1-3. RDA Equipment Shelter Power Distribution (Sheet 9 of 11)

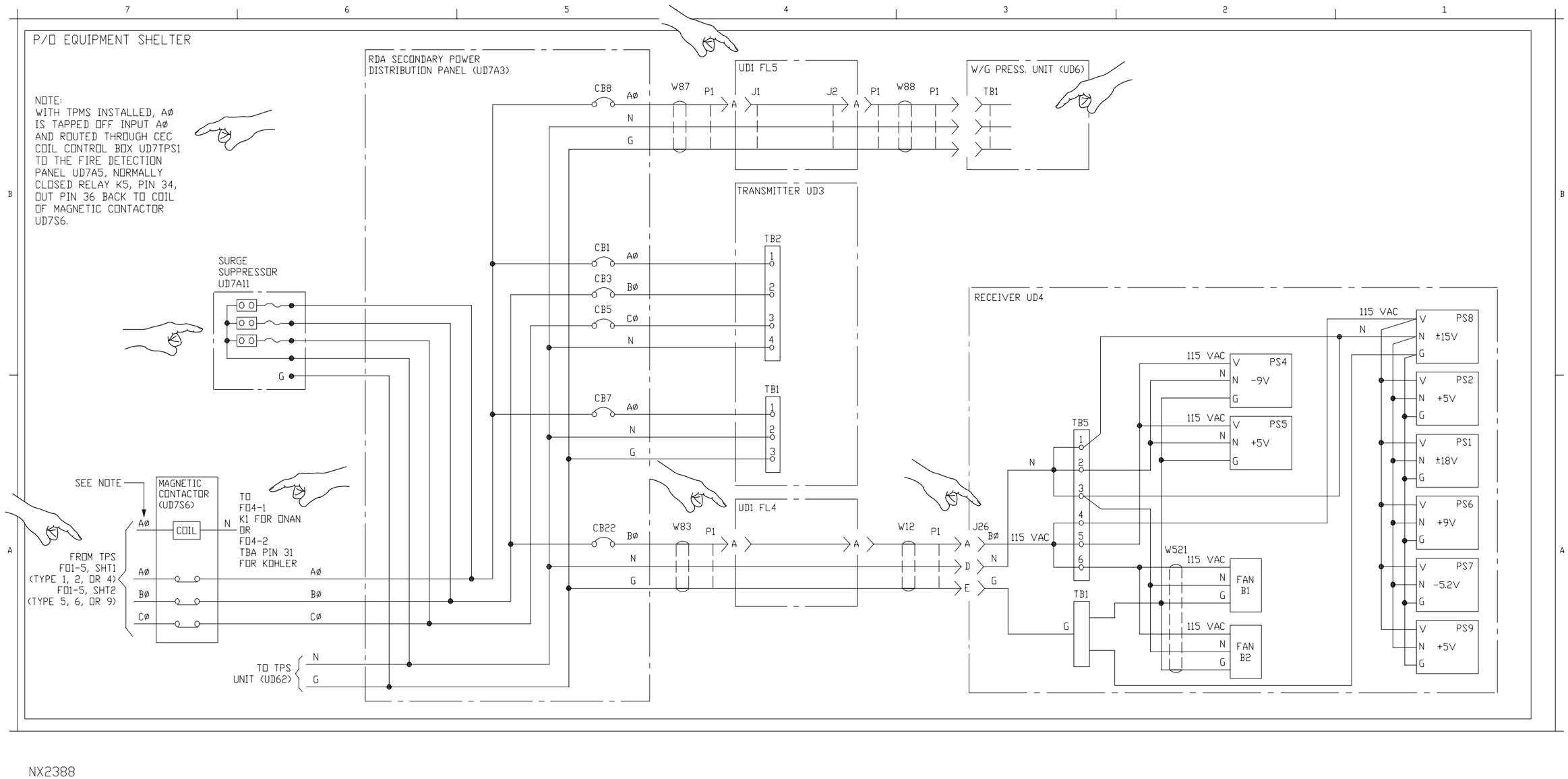

Figure FO1-3. RDA Equipment Shelter Power Distribution (Sheet 10 of 11)

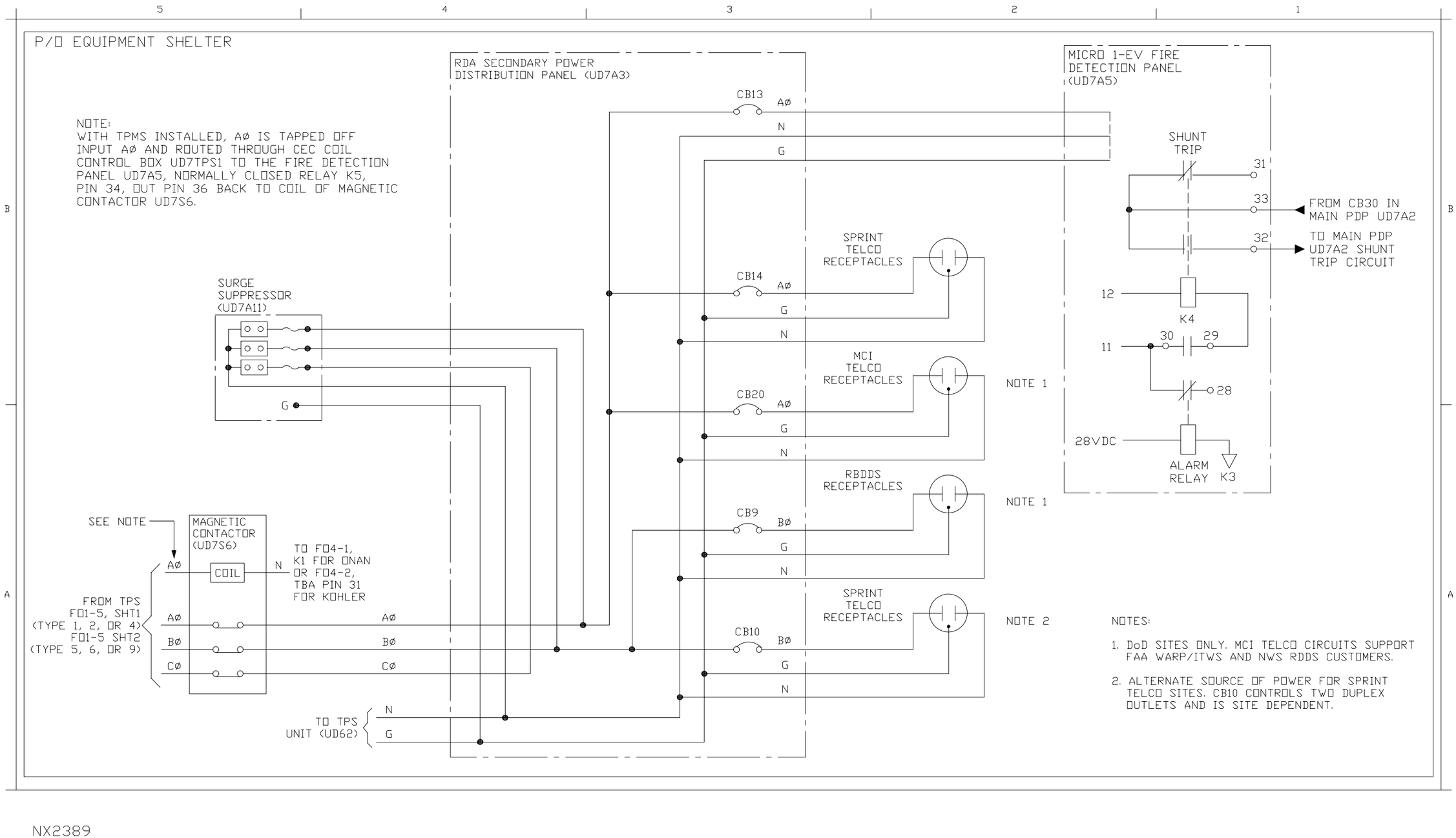

Figure FO1-3. RDA Equipment Shelter Power Distribution (Sheet 11 of 11)

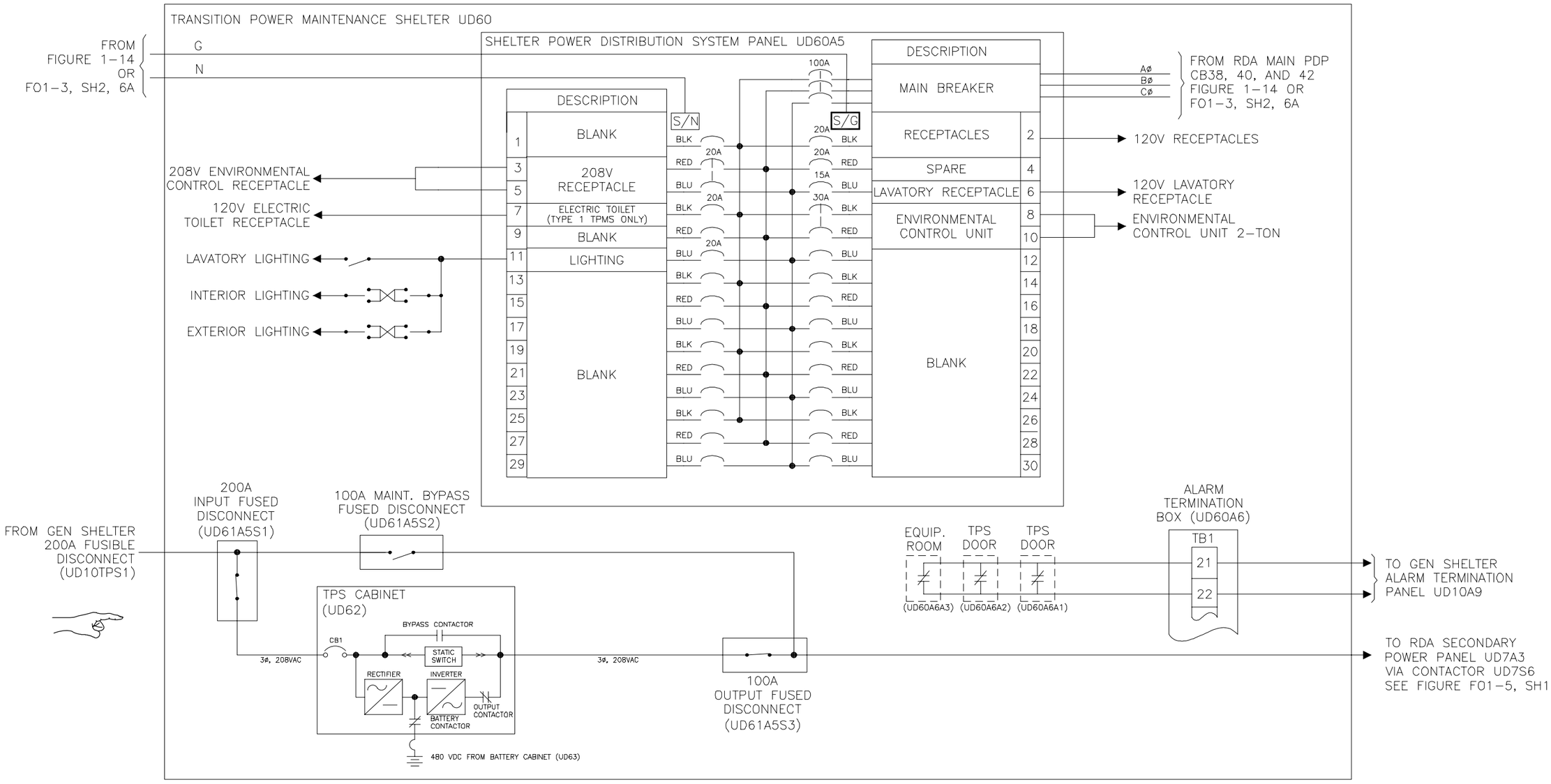

Figure FO1-4. TPMS Electrical Power Distribution (Type 1 and 2 TPMS) (Sheet 1 of 3)

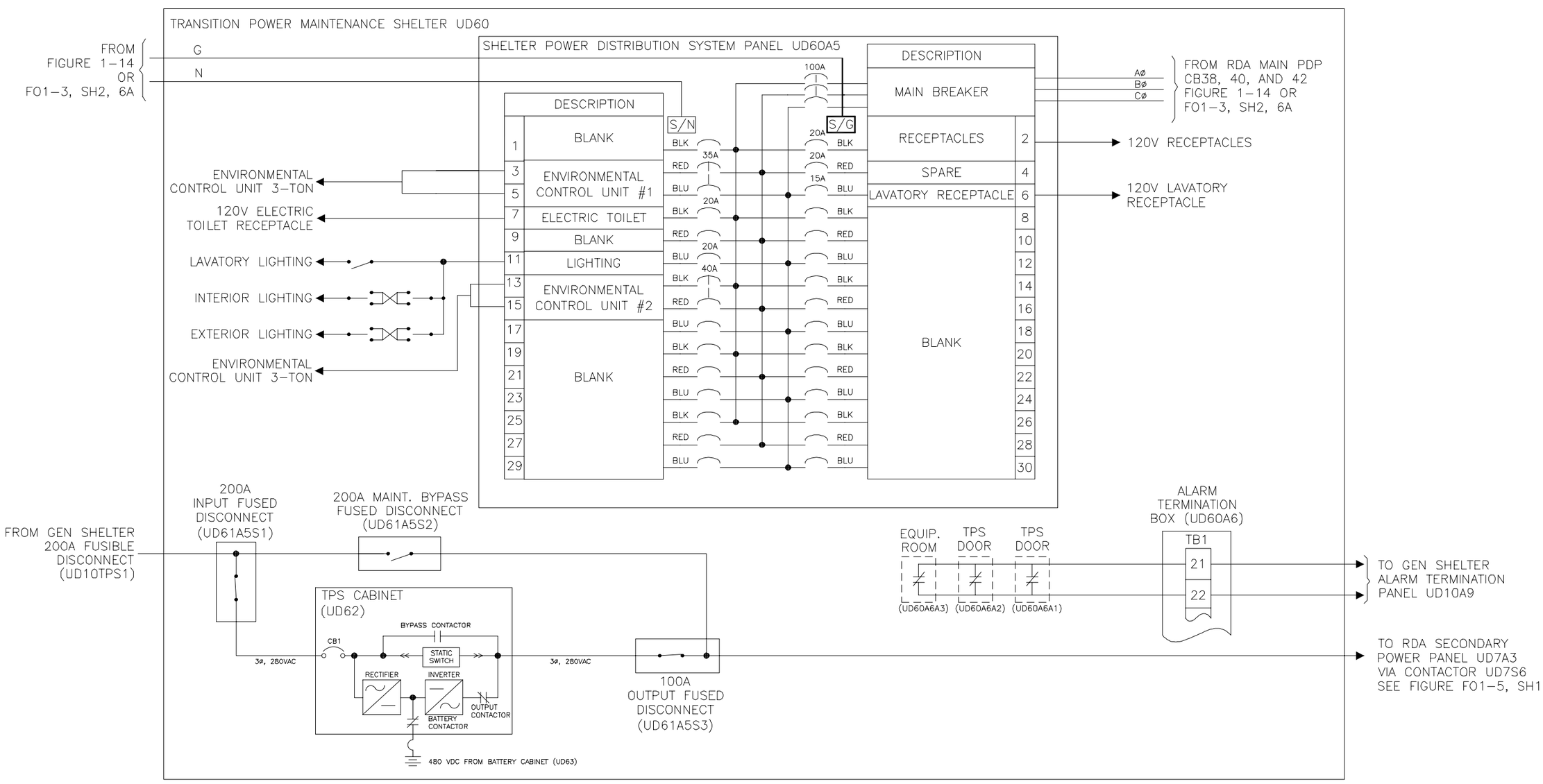

Figure FO1-4. TPMS Electrical Power Distribution (Type 4 TPMS) (Sheet 2 of 3)

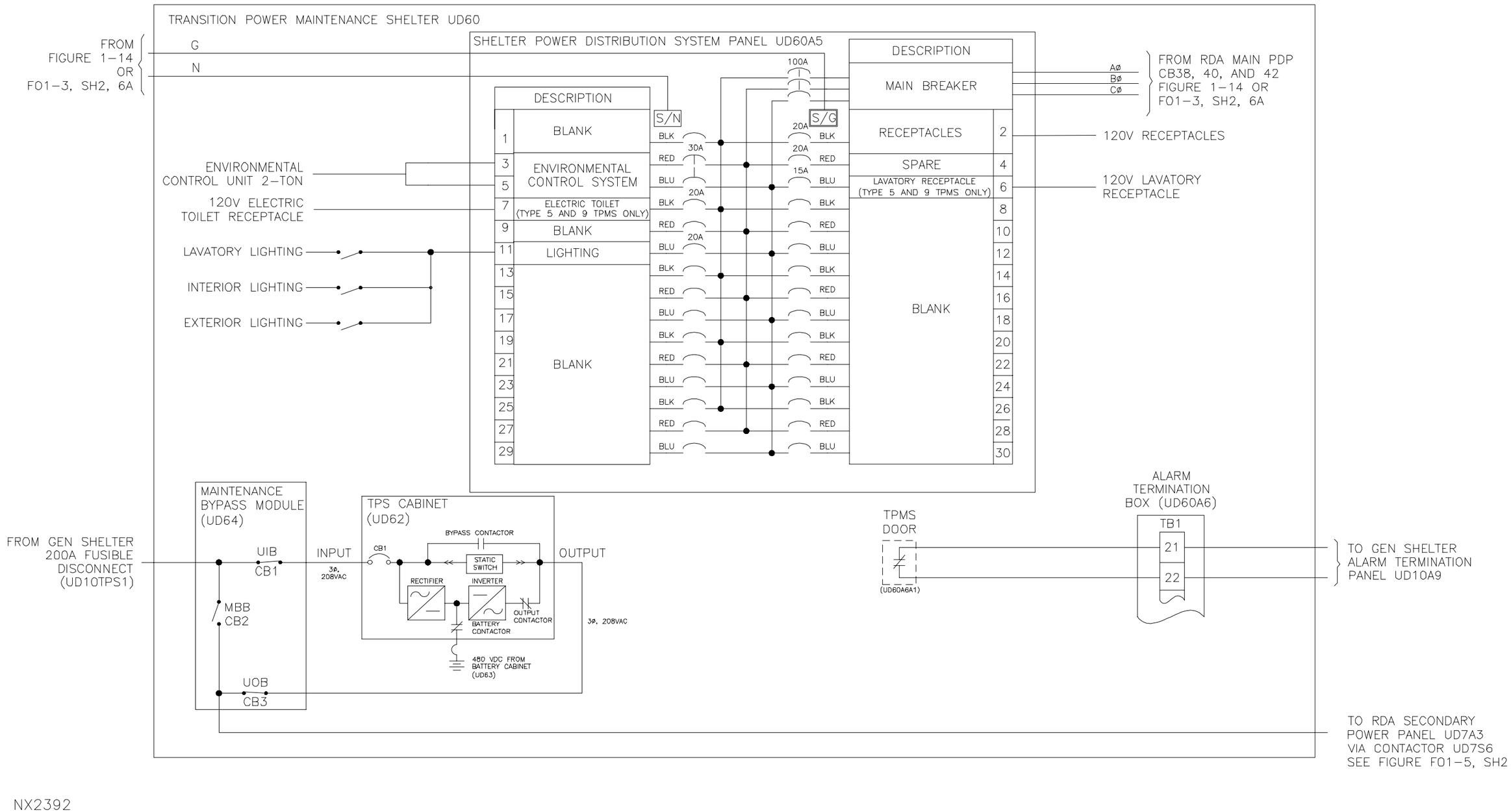

Figure FO1-4. TPMS Electrical Power Distribution (Type 5, 6, and 9 TPMS) (Sheet 3 of 3)

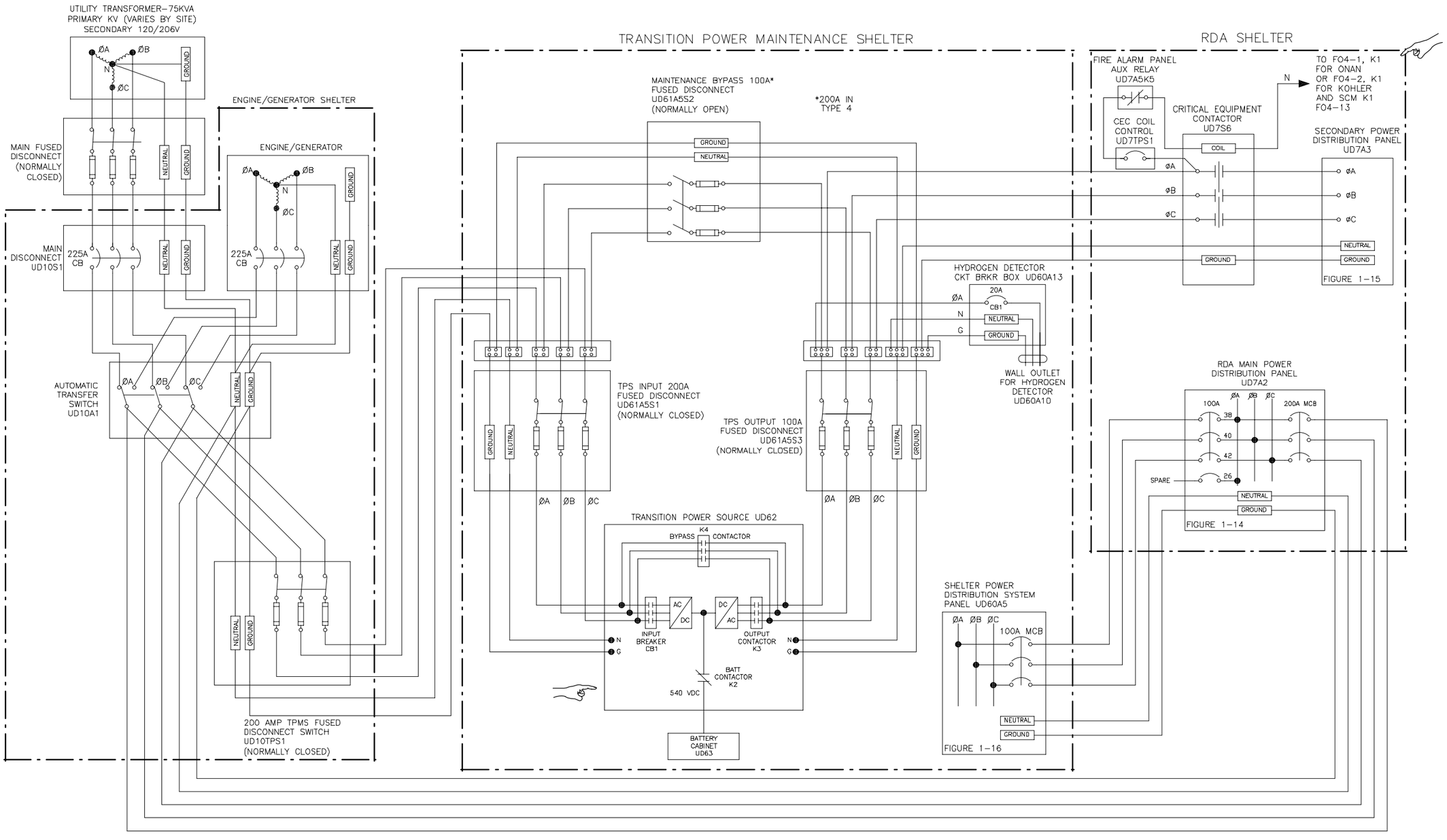

Figure FO1−5. Transition Power Source Power Distribution (Type 1, 2, and 4) (Sheet 1 of 2)

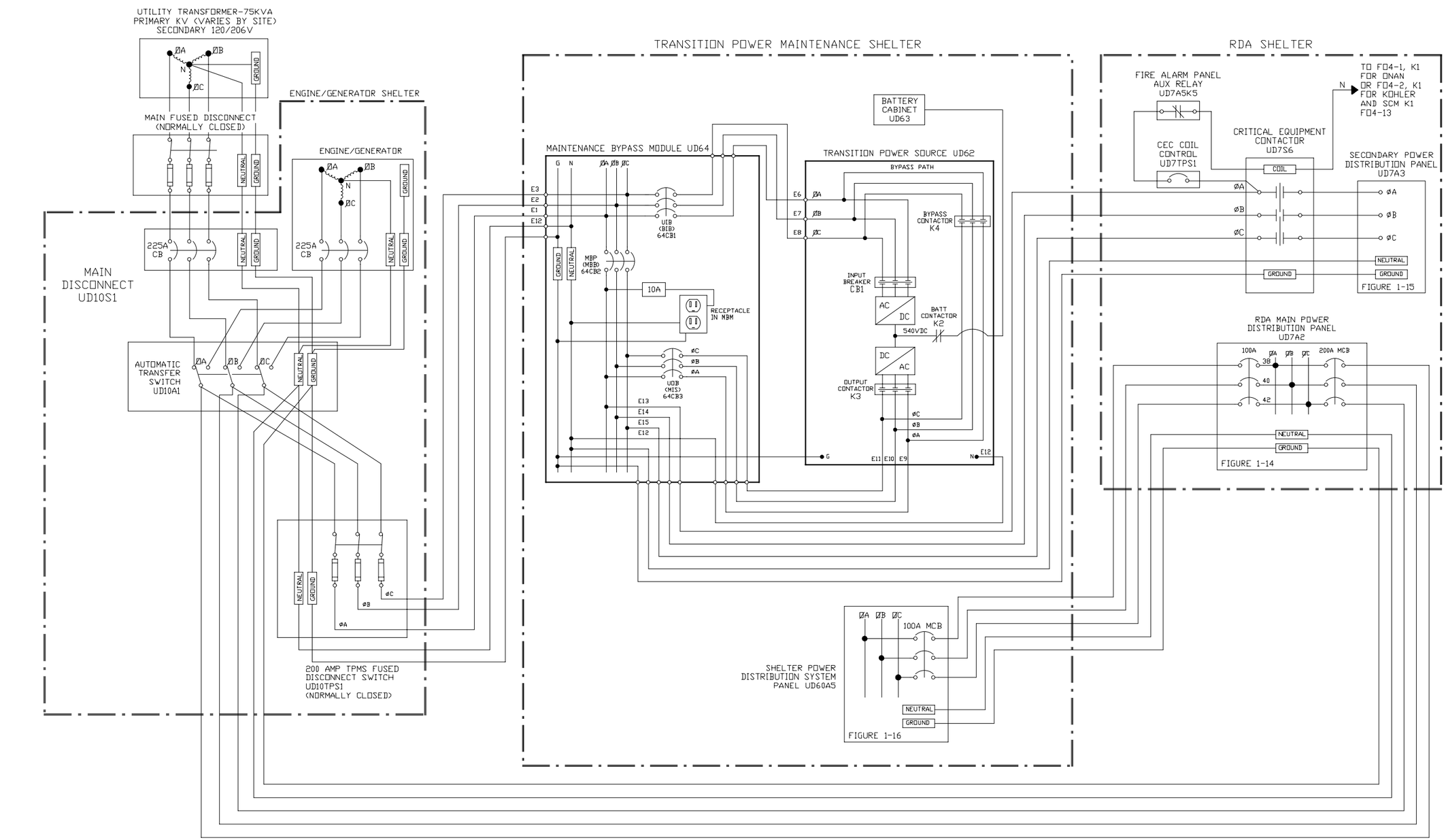

Figure FO1−5. Transition Power Source Power Distribution (Type 5, 6, and 9) (Sheet 2 of 2)

CHAPTER 2

RPIE OPERATING INSTRUCTIONS

SECTION 2−1. GENERAL DESCRIPTION

This chapter provides the necessary instructions for preparing the Real Property Installed Equipment (RPIE) subsystem for operational power−up, operational checks, and power−down (shutdown). Following these procedures ensures equipment and personnel safety. Also, these procedures enable the technician to prepare the RPIE subsystems for operations and service in a logical sequence.

SECTION 2−2. OPERATIONAL INSTRUCTIONS

The operational instructions consist of initial RPIE subsystems power−up procedures found in Table 2−1 through Table 2−4. Also provided are complete RPIE shutdown procedures (Table 2−5), and operational checks (Table 2−6). The procedures to shutdown or start−up the Transition Power Source (TPS) can be found in Table 2−8 or Table 2−9, respectfully. Individual preventive maintenance and replacement procedures provide specific shutdown and power−up procedural requirements.

- Table 2−1 − Power Distribution Subsystem Power−up Procedures
- Table 2−2 − Heat, Ventilation, and Air Conditioning (HVAC) Subsystem Power−up Procedures
- Table 2−3 − Fire Detection Subsystem Power−up Procedures
  (For Micro Junior power−up procedures, refer to Table A−1 in Appendix A).
- Table 2−4 − Security and Auxiliary Subsystem Power−up Procedures
- Table 2−5 − RPIE Power Shutdown Procedures (except TPS UD62)
- Table 2−6 − RDA Tower/Utilities Operational Check Procedures
- Table 2−7 − Tower Utility Performance Data Parameters
- Table 2−8 − Removing the TPS from Normal Operation/TPS Shutdown Procedure
- Table 2−9 − TPS Power−Up/Restoring TPS to Normal Operation Procedure

Normal operational checks require the use of the Radar Data Acquisition (RDA) Maintenance Terminal. Operational Check Procedures (Table 2−6) provide the necessary information to call up the Performance Data Tower Utilities Menu (Table 2−7) for evaluation.

SECTION 2−3. EMERGENCY PROCEDURES

Not Applicable.

SECTION 2−4. CONTROLS AND INDICATORS

The controls and indicators for the RPIE equipment are shown in Figure 2−1 through Figure 2−9. These figures are provided for a quick reference for each of the controls and indicators on the RPIE equipment. See Figure 1−11 through Figure 1−17 for internal Auto−Transfer Switch, Generator, RDA, Transition Power Maintenance Shelter (TPMS), and Microwave Line of Sight (MLOS) Shelter Power Distribution Panel controls and indicators.

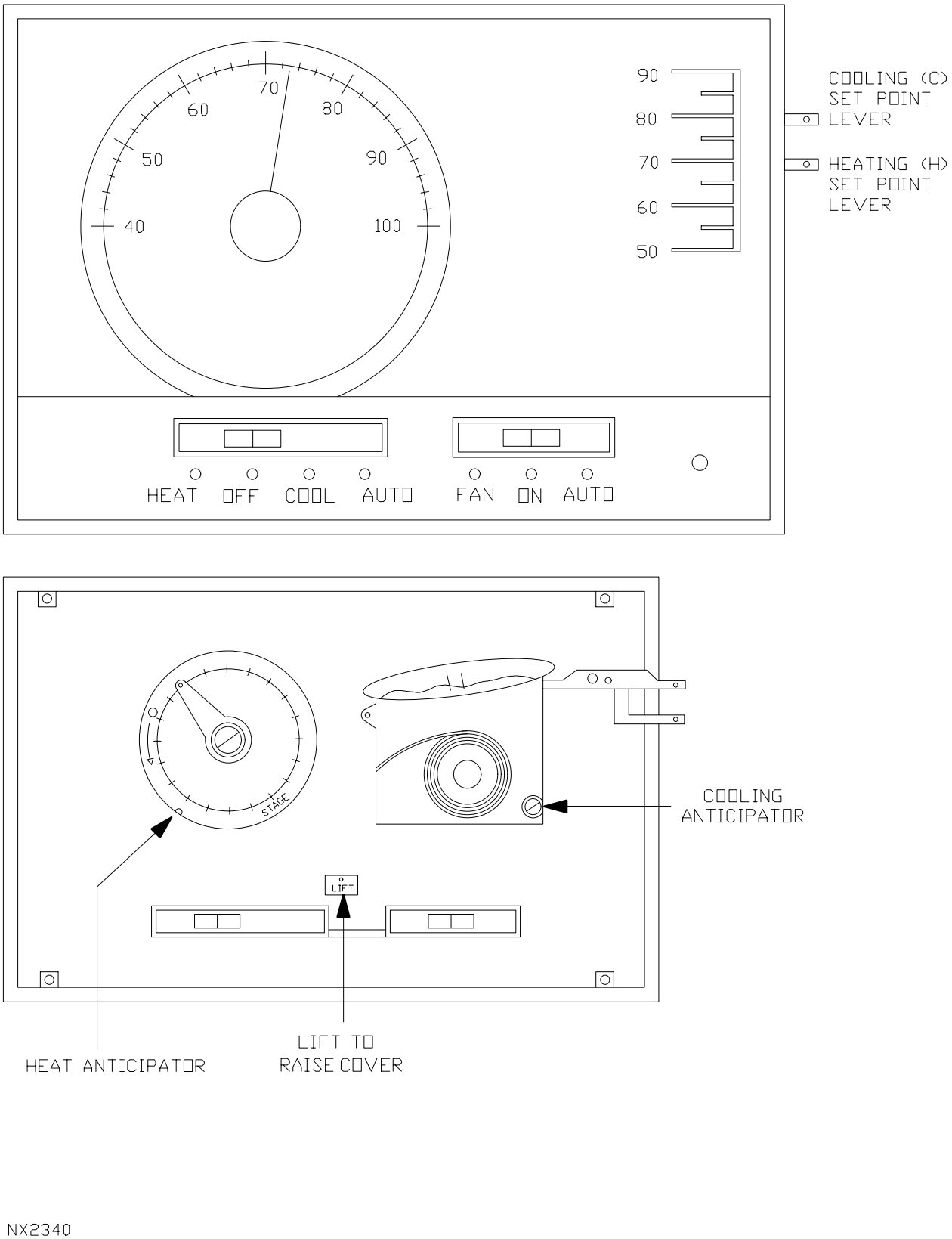

Figure 2−1. RDA Air Conditioner #1 or #2 and TPMS ECU Control Thermostat (Typical)

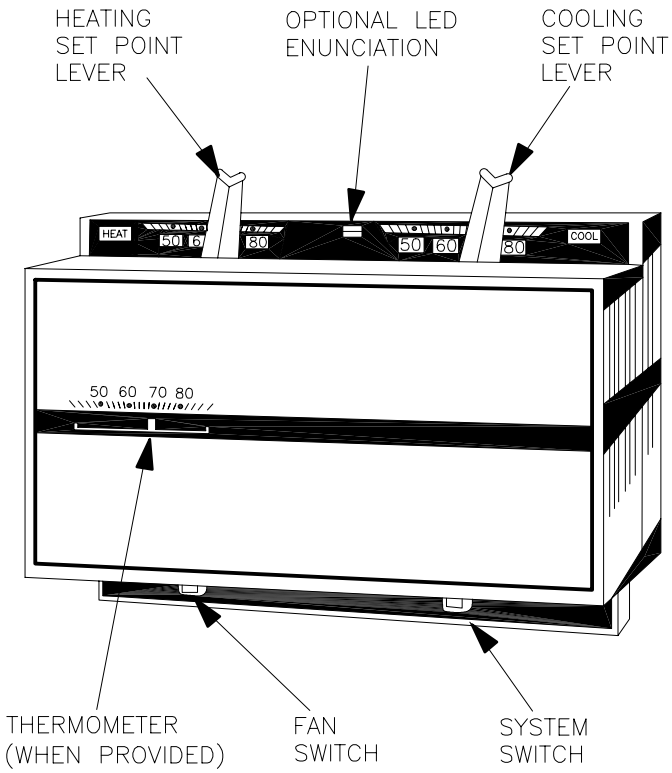

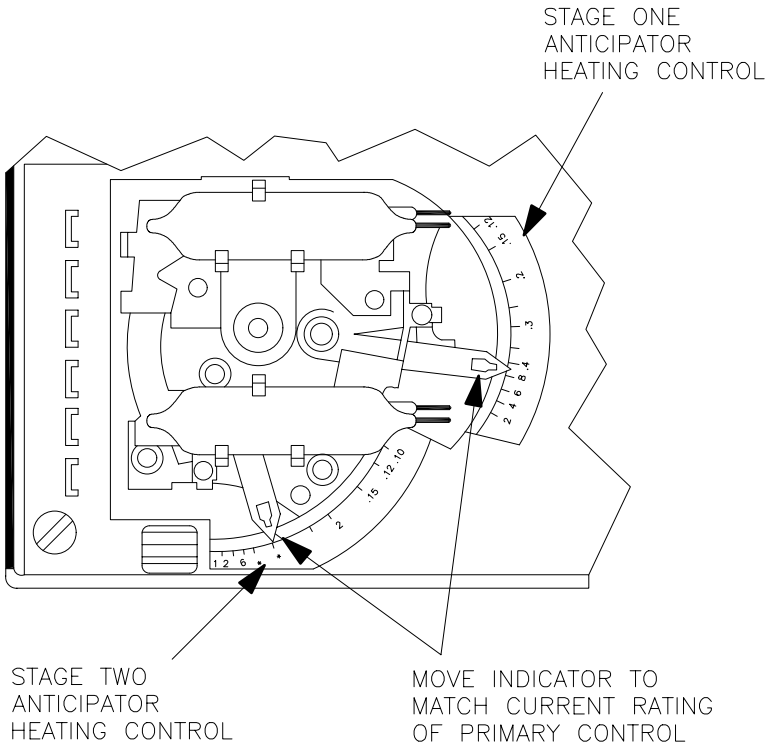

Figure 2−2. RDA Air Conditioner #2 with Economizer, Two Stage Control Thermostat

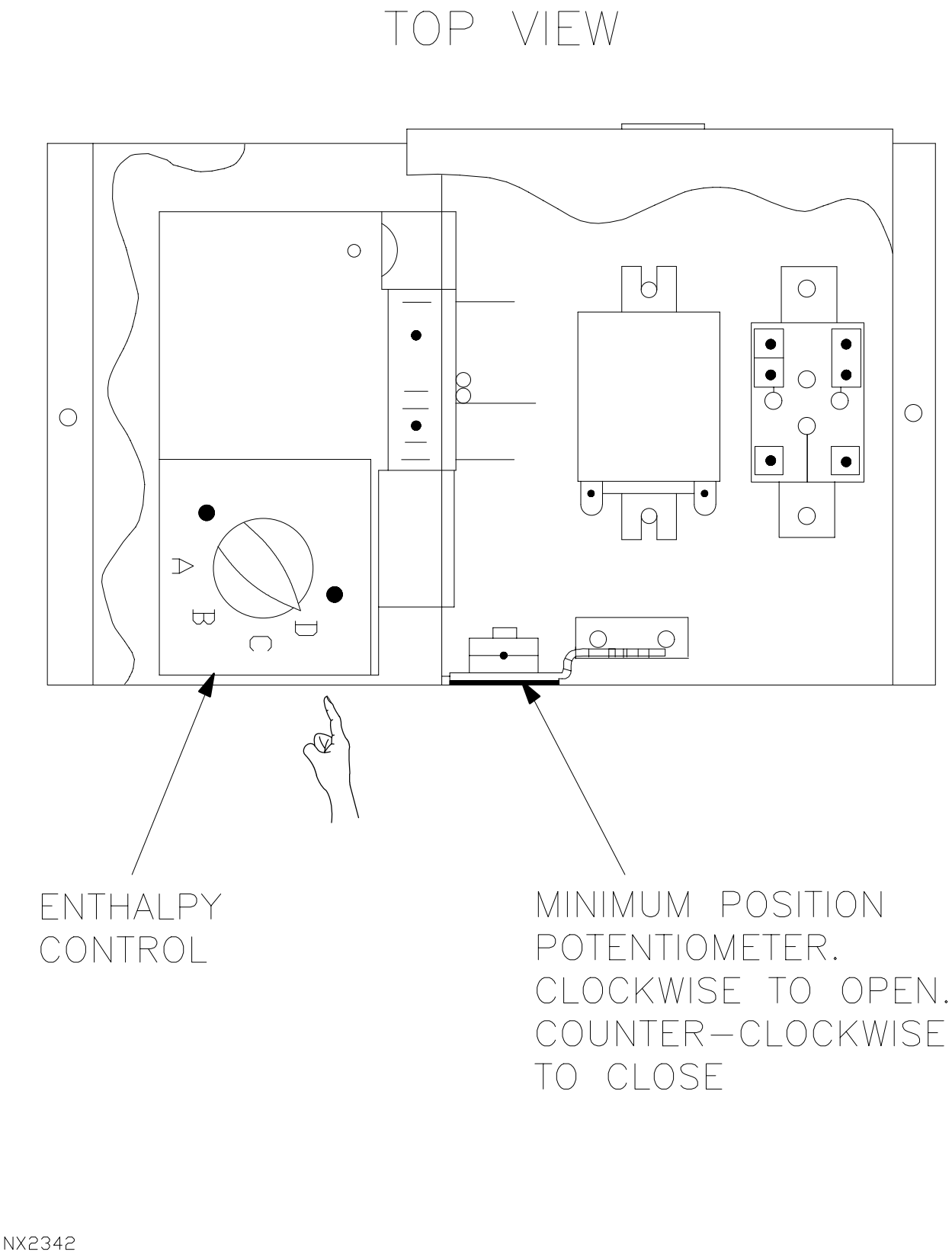

Figure 2−3. RDA Air Conditioner #2 with Economizer, Control Panel (Typical)

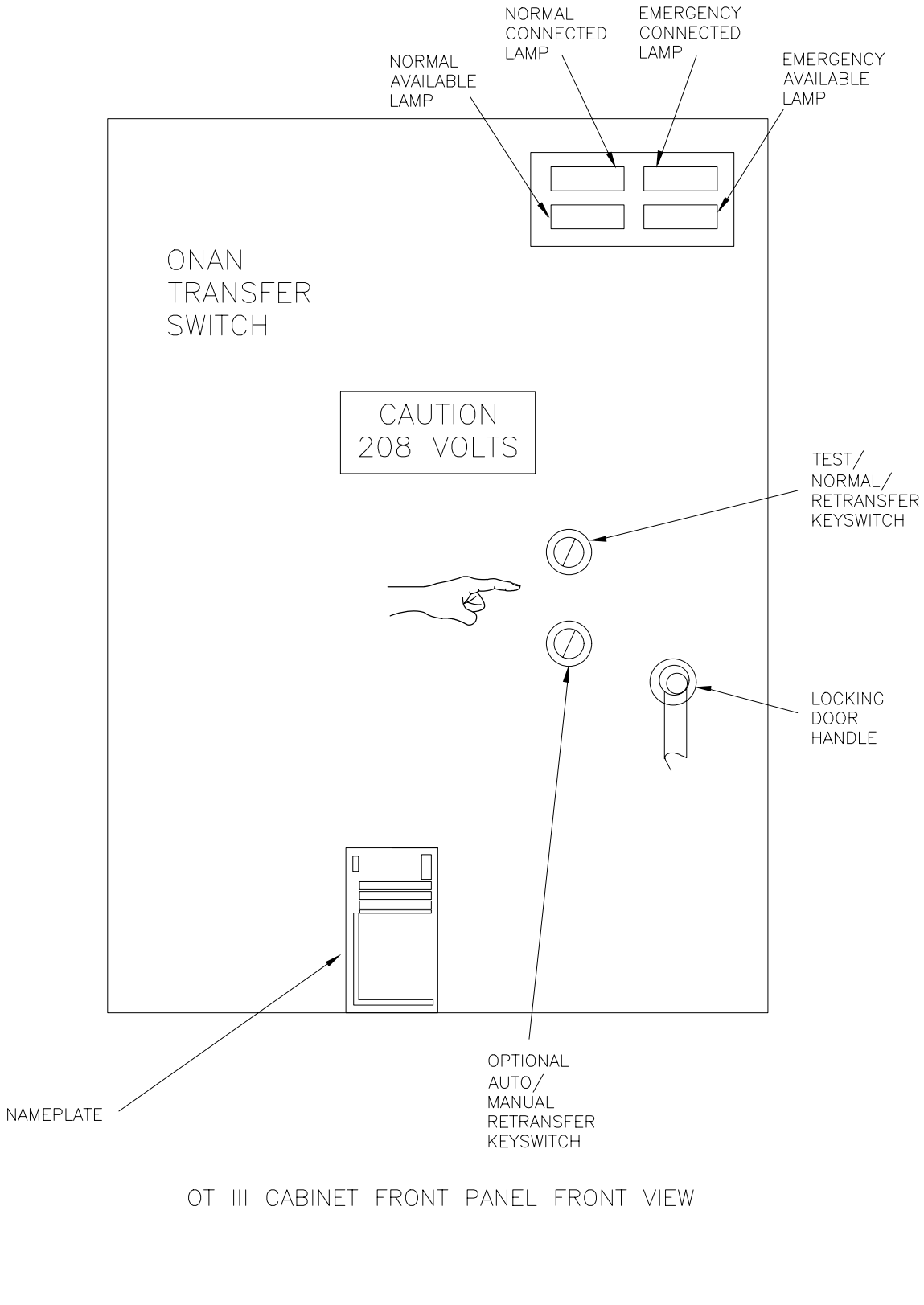

Figure 2−4. Generator Shelter Automatic Transfer Switch Front Panel Controls and Indicators (Onan)

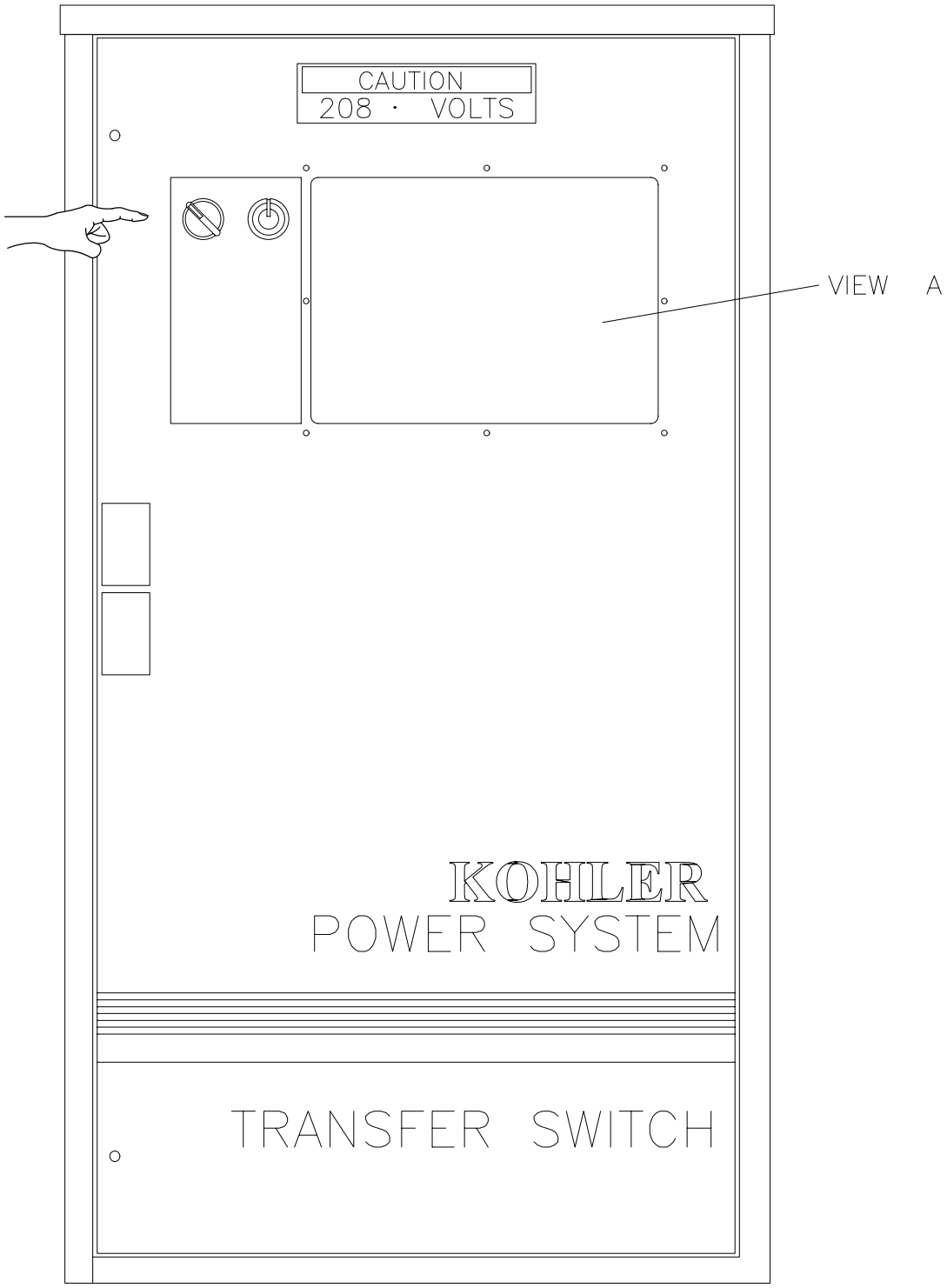

NX2344

Figure 2−5. Generator Shelter Automatic Transfer Switch Front Panel Controls and Indicators (Kohler) (Sheet 1 of 2)

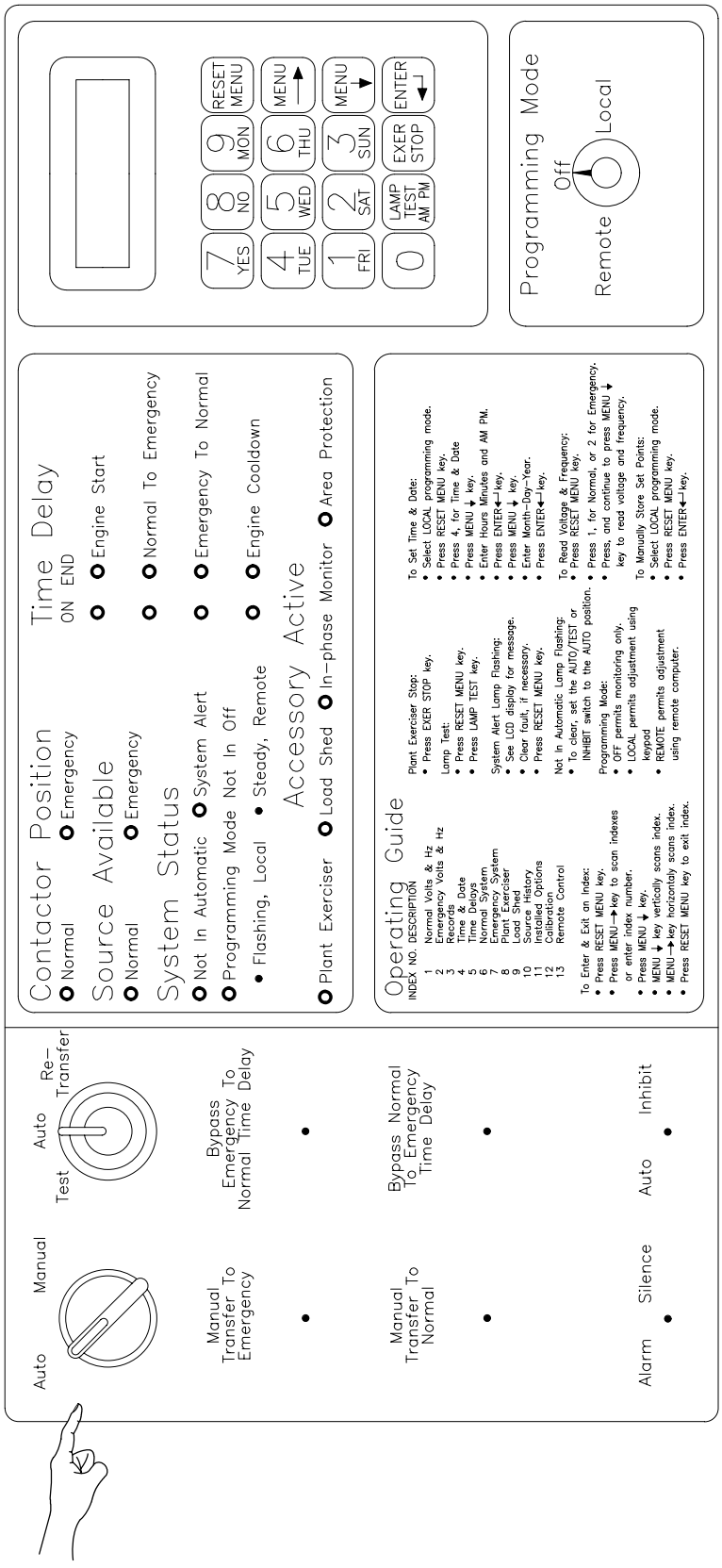

Figure 2−5. Generator Shelter Automatic Transfer Switch Front Panel Controls and Indicators (Kohler) (Sheet 2 of 2)

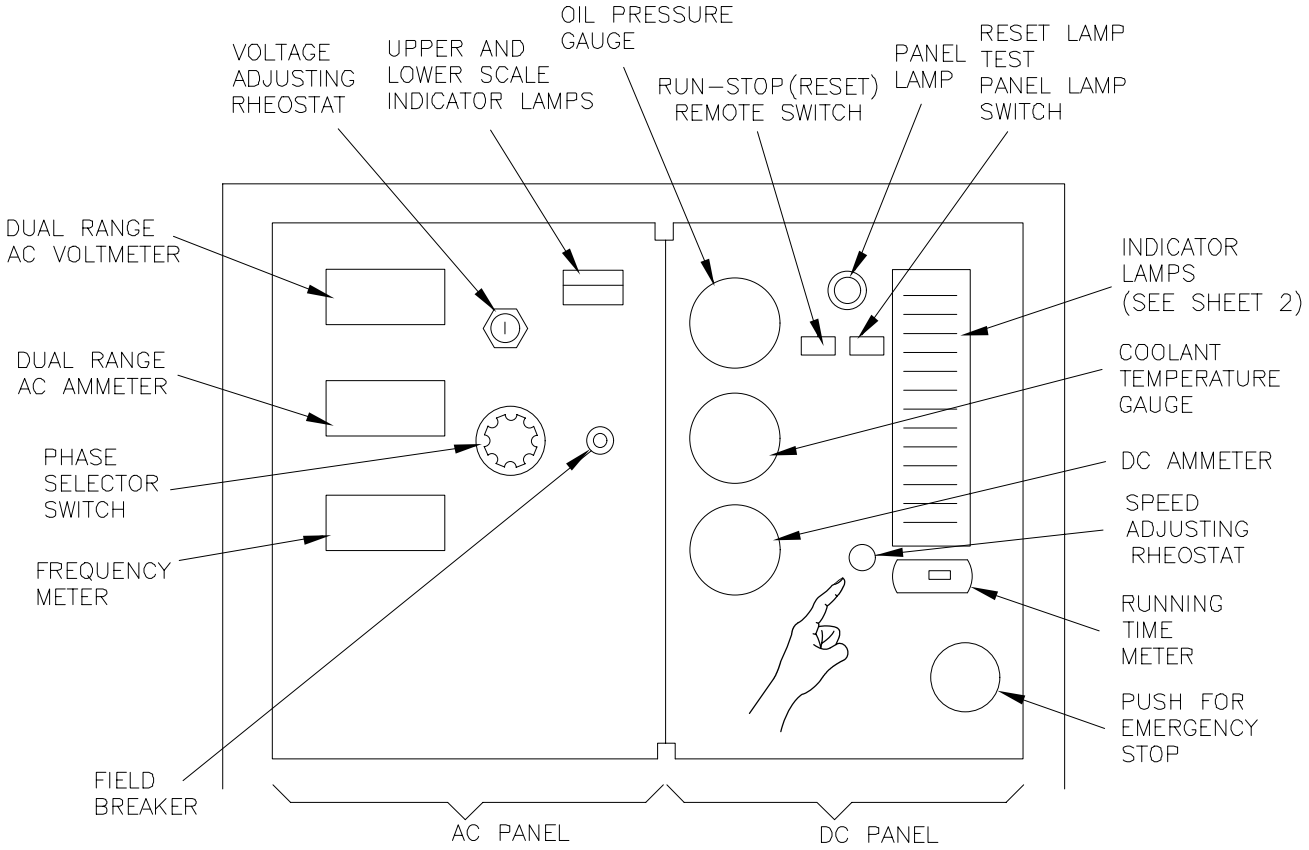

Figure 2−6. Generator Control Panel, Controls and Indicators (Onan) (Sheet 1 of 2)

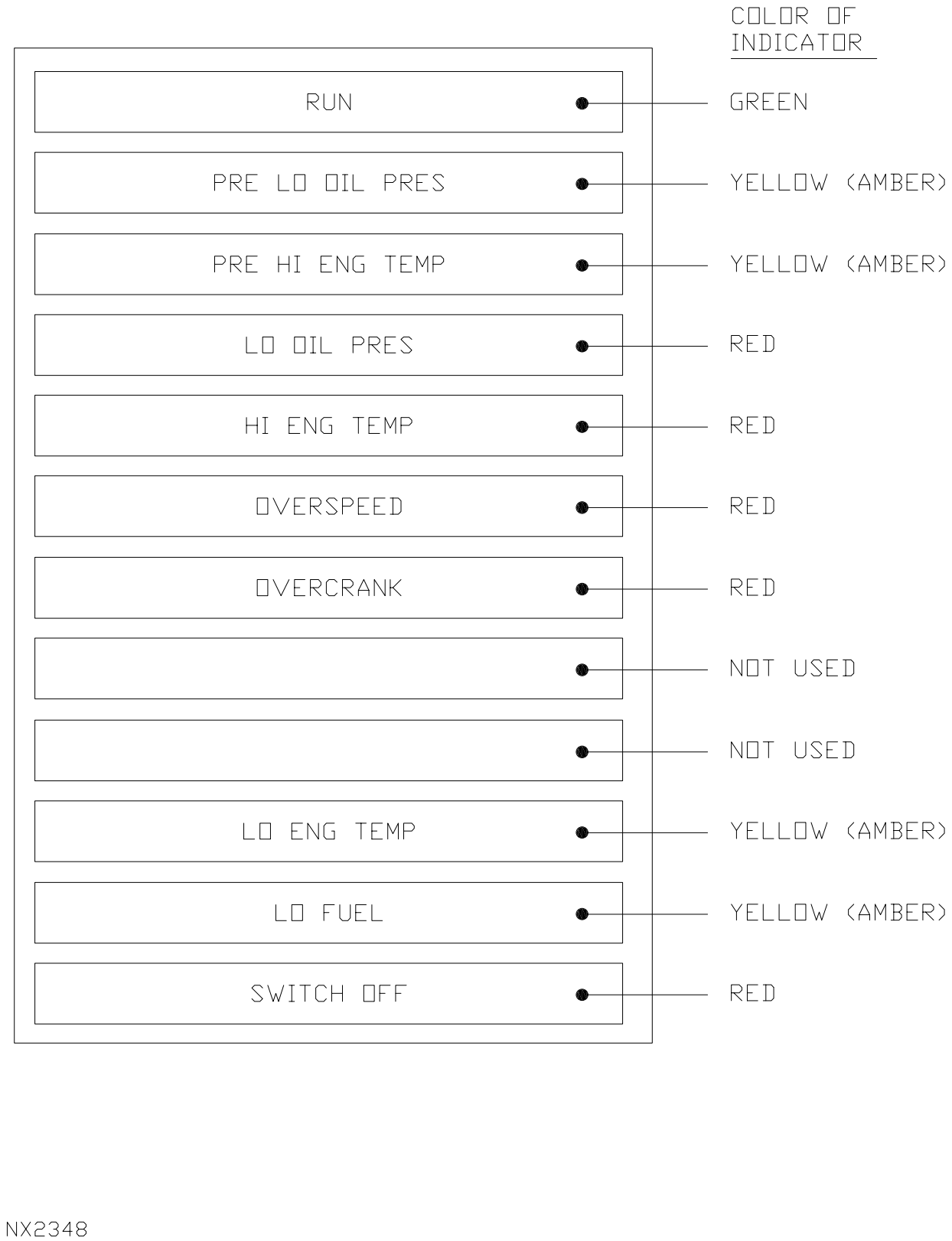

Figure 2−6. Generator Control Panel, Controls and Indicators (Onan) (Sheet 2 of 2)

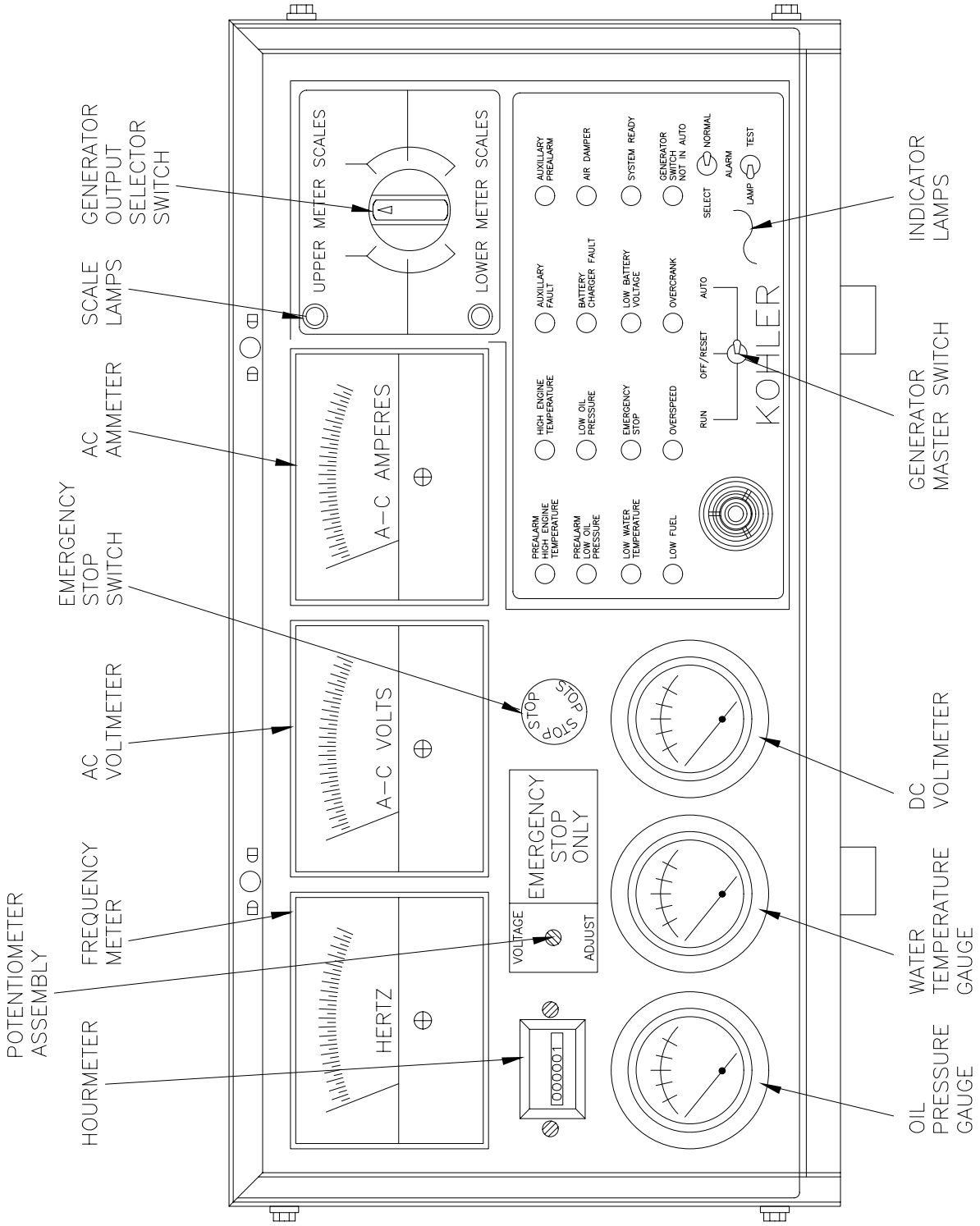

NX2347

Figure 2−7. Generator Control Panel, Controls and Indicators (Kohler)

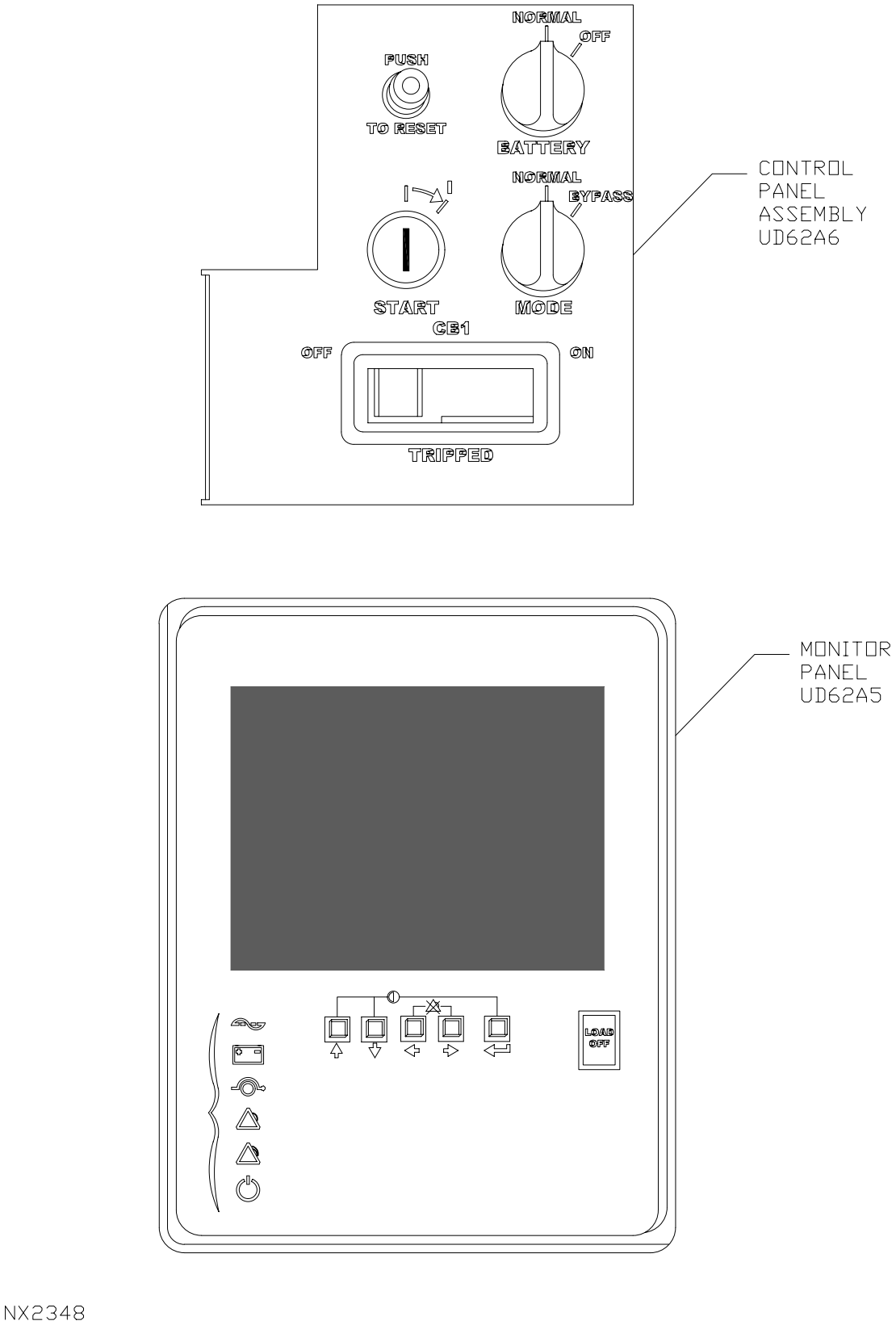

Figure 2−8. TPS Control and Monitor Panel Controls and Indicators

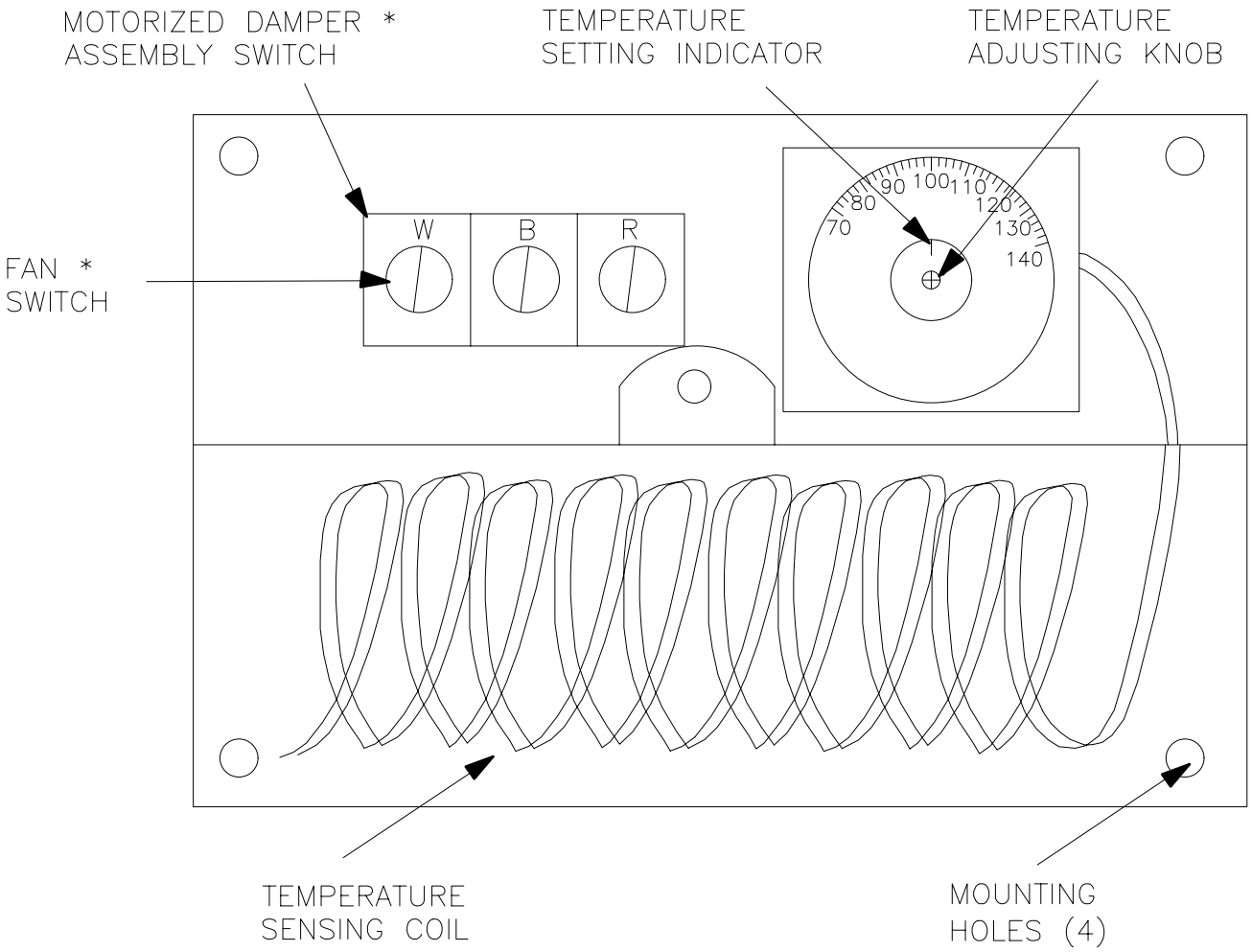

* WIRES TO DAMPER ASSEMBLY SWITCH AND FAN SWITCH ARE EITHER CONNECTED TOGETHER AT THE SCREW OR SPLICED TOGETHER AT ANOTHER POINT.

NX2349

Figure 2−9. Radome Venting Control Thermostat

Table 2−1. Power Distribution Subsystem Power−up Procedures

Step	Equipment	Action	Indication/Reference
	Generator Shelter (**Figure 1−3**)		
1.	Utility Power Disconnect Circuit Breaker UD10S1	Set Utility Power Disconnect Circuit Breaker (CB) to **ON**	Auto−Transfer Switch Normal Available lamp and Normal Connected lamp are illuminated.
2.	Auto−Transfer Switch Assembly UD10A1−1 (Onan) (Figure 1−11)	Open the Auto−Transfer Switch Assembly door	
	a. Accessory Control Panel UD10A1A1−1	Set Motor Disconnect switch (S1) to **Auto** position	
	b. Test/Normal/ Retransfer Switch UD10A1S12	Set Test/Normal Retransfer switch to **Normal** position	
	c. Retransfer Auto/Manual Switch UD10A1S14	Set Retransfer Auto/Manual switch to **Auto**	Disregard statement about Manual position on Caution sticker on door. TPS installation changed setup.
	d. Power Sentry Module UD10A1A4−1	Observe Source 1 Available LED illuminated	Illuminated
	e. Power Sentry Module UD10A1A4−1	Set With/Without Load switch to **Without Load**	
	f. Program Transition Module UD10A1A8−1	Set No Delay/Delay switch to **Delay** for approximately 2 seconds	
	g. Battery Charger UD10A1A6−1 indicator flickers	Observe Battery Charger Amp Meter flickers	Amp Meter indicator
	h. Auto−Transfer Switch Assembly Door	Close the Auto−Transfer Switch Assembly door	

− − − − −

* Site dependent.

Table 2−1. Power Distribution Subsystem Power−up Procedures (continued)

Step	Equipment	Action	Indication/Reference
	Generator Shelter Cont.		
3.	Auto−Transfer Switch Assembly UD10A1 (Kohler) (Figure 2−5, sheet 2)		
	a. Control Panel	Set Transfer Mode Auto/Manual selector switch to **AUTO** position	Disregard statement about Manual position on Caution sticker on door. TPS installation chaned setup.
	b. Control Panel	Set Programming Mode key switch to **OFF**	
	c. Control Panel	Push Lamp Test button to check all indicators light	
4.	Generator 80 kW UD10G1 (Onan) (Figure 1−3 and Figure 2−6, sheet 1)		
	a. Generator Control Panel UD10G1A1−1	Set RUN−STOP(RESET)−REMOTE switch to **REMOTE**	
	b. Generator Control Panel UD10G1A1−1	Ensure that the EMERGENCY STOP switch is pulled out	
	c. Generator Control Panel UD10G1A1−1	Push Lamp Test rocker switch to check all lights	
	d. Generator Control Panel UD10G1A1−1	Observe DC AMPS meter flickers	Batteries are charging
	e. Generator Power Disconnect Switch UD10G1S1−1	Set the Power Disconnect switch CB to **ON**	
	f. Generator Engine Heater	Ensure the Generator Engine Block Heater plug is connected to the 120 Vac outlet mounted to radiator housing	

− − − − −

* Site dependent.

Table 2−1. Power Distribution Subsystem Power−up Procedures (continued)

Step	Equipment	Action	Indication/Reference
	Generator Shelter Cont.		
5.	Generator 80 kW UD10G1 (Kohler) (Figure 1−3 and Figure 2−7)		
	a. Generator Control Panel UD10G1A1	Set the Generator Master RUN−OFF/RESET−AUTO switch to **AUTO**	
	b. Generator Control Panel UD10G1A1	Ensure that the EMERGENCY STOP switch is pulled out (if not, rotate switch clockwise until switch springs back to original position)	
	c. Generator Control Panel UD10G1A1	Push Lamp Test spring−loaded switch to check all indicators light	
	d. Generator Control Panel UD10G1A1	Observe DC VOLTMETER (battery)	Measures voltage of starting battery
	e. Generator Engine Heater	Ensures the Generator Block Heater plug is connected to the 120 Vac outlet mounted on skid rail	
6.	Power Distribution Panel UD10A2 (Figure 1−13)		
	a. Main Disconnect Circuit Breaker	Set CB1 and 3 to **ON**	
	b. Interior and Exterior Lights Circuit Breaker	Set CB5 to **ON**	
	c. Louvers and Fans Circuit Breaker	Set CB7 to **ON**	
	d. Generator Block Heater Circuit Breaker	Set CB2 to **ON**	
	e. Receptacles Circuit Breaker	Set CB4 to **ON**	

– – – – –

* Site dependent.

Table 2−1. Power Distribution Subsystem Power−up Procedures (continued)

Step	Equipment	Action	Indication/Reference
	Generator Shelter Cont.		
6. Cont.	f. Room Heater Circuit Breaker	Set CB6 and 8 to **ON**	
	RDA Equipment Shelter		
	(Figure 1−5, sheets 1 and 2)		
7.	RDA Equipment Shelter Main Power Distribution Panel UD7A2 (Figure 1−14)		
	a. 200A Service Circuit Breaker Assembly	Set the 200A Service Circuit Breaker Assembly to **ON**	
	b. Interior, Exterior Lights Circuit Breaker	Set CB18 to **ON**	
	c. Radome Heater #1* Circuit Breakers	Set CB7, 9, and 11 to **ON**	
	d. Radome Lights/Receptacles Circuit Breaker	Set CB13 to **ON**	
	e. Tower Stair Lights Circuit Breaker	Set CB15 to **ON**	
	f. Radome Vent Circuit Breaker	Set CB17 to **ON**	
	g. Aircraft Warning Lights Circuit Breaker	Set CB19 to **ON**	
	h. Radome Heater #2* Circuit Breakers	Set CB27, 29, and 31 to **ON**	
	i. Radome Heater #3* Circuit Breakers	Set CB33, 35, and 37 to **ON**	
	j. Security Alarm Panel Circuit Breaker	Set CB41 to **ON**	
	k. Air Conditioner #1 Circuit Breakers	Set CB2, 4, and 6 to **ON**	

− − − − −

* Site dependent.

Table 2−1. Power Distribution Subsystem Power−up Procedures (continued)

Step	Equipment	Action	Indication/Reference
	RDA Equipment Shelter Cont.		
7. Cont.	l. Receptacles Circuit Breaker	Set CB8 and CB10 to **ON**	CB10 relocated to Secondary PDP at some sites
	m. Air Conditioner #2 Circuit Breakers	Set CB12, 14, and 16 to **ON**	
	n. Transmitter Ventilation System Circuit Breaker	Set CB22 to **ON**	
	o. Spare	Set CB26 to **OFF**	
	p. Shunt Trip Circuit Breaker	Set CB30 to **ON**	
	q. Transition Power Maintenance Shelter Power Distribution Panel UD60A5 Circuit Breakers	Set CB38, 40, and 42 to **ON**	
8.	RDA Equipment Shelter Secondary Power Distribution Panel UD7A3 (Figure 1−15)		
	a. Transmitter Circuit Breakers	Set CB1, 3, and 5 to **ON**	
	b. Transmitter Utility Outlet Circuit Breaker	Set CB7 to **ON**	
	c. RBDDS Circuit Breaker*	Set CB9 to **ON**	DoD only.
	d. Fire Detection Subsystem Panel Circuit Breaker	Set CB13 to **ON**	
	e. RDA Data Processor Circuit Breakers	Set CB15, 17, and 19 to **ON**	
	f. Pedestal Motor Circuit Breakers	Set CB2, 4, and 6 to **ON**	
	g. W/G Pressurization Unit Circuit Breaker	Set CB8 to **ON**	

− − − − −

* Site dependent.

Table 2−1. Power Distribution Subsystem Power−up Procedures (continued)

Step	Equipment	Action	Indication/Reference
	RDA Equipment Shelter Cont.		
8. Cont.	h. Receptacles Circuit Breaker	Set CB10 to **ON**	
	i. Telephone Circuit Breaker (Reserved for Sprint TELCO)	Set CB14 to **ON**	
	j. Signal Processor Circuit Breakers	Set CB16 and 18 to **ON**	
	k. MCI TELCO Circuit Breaker (DoD only)	Set CB20 to **ON**	
	l. Receiver Circuit Breaker	Set CB22 to **ON**	
.	m. MLOS Shelter Circuit Breakers*	Set CB24 and 26 to **ON**	
	NOTE When the MLOS Transceiver is located in the RDA equipment shelter, only circuit breaker CB24 is used.		
	n. RPG (DoD Only)	Set CB25, 27, and 29 to **ON**	
	o. Wideband Cabinet* Circuit Breaker	Set CB28 and 30 to **ON**	
	NOTE On model WA60 air conditioners, circuit breaker CB1 is located behind the bottom access panel in the lower rear right corner. On model WA601 or WA602 air conditioners, circuit breaker CB1 is located behind the circuit breaker/disconnect access panel on right side of unit.		
9.	Air Conditioner #1 UD7AC1	Set UD7AC1 CB1 to **ON**	
10.	Air Conditioner #2 UD7AC2	Set UD7AC2 CB1 to **ON**	

− − − − −

* Site dependent.

Table 2−1. Power Distribution Subsystem Power−up Procedures (continued)

Step	Equipment	Action	Indication/Reference
	RDA Equipment Shelter Cont.		
11.	Security Panel ON/OFF Switch	Set ON/OFF switch to **ON**	
	TPMS Shelter **(Figure 1−6, sheets 1 through 3)**		
12.	TPMS Shelter Power Distribution System Panel UD60A5 (Figure 1−16, sheets 1 and 2)		
	a. Main Disconnect Circuit Breaker	Set Main Breaker to **ON**	
	b. Receptacle Circuit Breaker	Set CB2 to **ON**	
	c. Lavatory Receptacle Circuit Breaker	Set CB6 to **ON**	
	d. Lighting Circuit Breaker	Set CB11 to **ON**	
	e. Environmental Control Unit Circuit Breakers		
	Type 1 and 2	Set CB8/10 to **ON**	
	Type 5, 6, and 9	Set CB3/5 to **ON**	
	Type 4 ECU #1	Set CB3/5 to **ON**	
	Type 4 ECU #2	Set CB13/15 to **ON**	
	f. Electric Toilet Circuit Breaker (if installed)	Set CB7 to **ON**	
	g. Spare Circuit Breakers		
	Type 1 and 2	Set CB3/5 and CB4 to **OFF**	
	Type 4	Set CB4 to **OFF**	

– – – – –

* Site dependent.

Table 2−1. Power Distribution Subsystem Power−up Procedures (continued)

Step	Equipment	Action	Indication/Reference
	MLOS Shelter		
	(Figure 1−7)		
13.	MLOS Power Distribution Panel UD13A1		
	(Figure 1−17)		
	a. Main Disconnect Circuit Breakers	Set CB1 and 3 to **ON**	
	b. Receptacle Circuit Breaker	Set CB5 to **ON**	
	c. Vent System Circuit Breaker	Set CB7 to **ON**	
	d. Lighting and Smoke Alarm Circuit Breaker	Set CB9 to **ON**	
	e. MLOS Transceiver Circuit Breaker	Set CB2 to **ON**	
	f. Aircraft Warning Lights Circuit Breaker	Set CB4 to **ON**	
	g. Heater Circuit Breakers	Set CB6 and 8 to **ON**	

− − − − −

* Site dependent.

Table 2−2. HVAC Subsystem Power−up Procedures

Step	Equipment	Action	Indication/Reference
1.	Radome Thermostat UD2S2	Set Tower Fan and Damper Thermostat to 85°F	
2.	Generator Shelter Thermostat UD10S2	Set Generator Shelter Thermostat to 85°F	
3.	Generator Shelter Heater UD10HR1 Thermostat	Set Generator Shelter Heater Thermostat to position **2**	
		NOTE The generator shelter temperature should be monitored to ensure that the heater thermostat setting maintains internal shelter temperature between 50° to 60°F during cold weather operations. Adjust heater thermostat setting as required.	
4.	RDA Equipment Shelter Air Conditioner #1 Thermostat UD7S3	Set thermostat in accordance with settings in Table 1−6.	
5.	RDA Equipment Shelter Air Conditioner #2 Thermostat UD7S4	Set thermostat in accordance with settings in Table 1−6.	
6.	RDA Equipment Shelter Transmitter Thermostat UD7S5	Set thermostat to 85°F	
7.	MLOS Shelter Ventilation System Thermostat UD13S2	Set Ventilation Thermostat to 72°F	
8.	MLOS Shelter Heating System Thermostat UD13S1	Set Heating System Thermostat to 70°F	
9.	MLOS Shelter Heater UD13HR1	Set Heater Thermostat dial to **2**	

Table 2−2. HVAC Subsystem Power−up Procedures (continued)

Step	Equipment	Action	Indication/Reference
10.	TPMS Environmental Control Unit Thermostat UD60A14 (Type 1, 2, 5, 6, and 9) or Lead−Lag Controller Thermostat (Type 4) UD60A14−1	Set SYSTEM selector and FAN selector to AUTO and TEMPERATURE selector at 75°F cool and 65°F heat	
	NOTE The Transition Power Maintenance Shelter temperature should be monitored to ensure that the heater thermostat setting maintains internal shelter temperature between 50°F and 60°F during cold weather operations.		

Table 2−3. Fire Detection Subsystem Power−up Procedures
(for Micro 1 EV Control Panel [1])

Step	Equipment	Action	Indication/Reference
1.	APPLY POWER TO FIRE DETECTION SUBSYSTEM		
	a. Fire Detection Subsystem Control Panel UD7A5	Gain access to inside and connect leads to the internal batteries.	
	b. RDA Secondary PDP UD7A3	Set CB13 to **ON**	
	c. RDA Main PDP UD7A2	Set CB30 to **ON**	
	NOTES		
	When a trouble or alarm condition exists, the buzzer will pulse and the keypad LED display will provide a code to pinpoint the alarm location. Refer to the label on the inside of the Fire Alarm System door or commercial manual for a definition of these codes.		
	When batteries are low, discharged, or cold, a battery fault condition will exist. The charger will recharge the batteries. The time required to do so is dependent upon the battery condition.		
	d. Fire Detection System Keypad	Press the **Reset** button on the keypad.	Green LED (AC power) is illuminated and `SAFE` is displayed.
	NOTE		
	The following procedures are performed at the Fire Detection System Control Panel Keypad.		
2.	PROGRAMMING THE FIRE DETECTION SUBSYSTEM		
	a. Set the Solenoids Switch SW1 to ON:		
	Fire Detection Panel Mother Board UD7A5A1 Solenoids On/Off Switch SW1	Set SW1 to the **ON** (down) position.	

1 For systems with Micro Junior Control Panel refer to Table A−1 in Appendix A.

Table 2−3. Fire Detection Subsystem Power−up Procedures
(for Micro 1 EV Control Panel [1]) (continued)

Step	Equipment	Action	Indication/Reference
	b. Set the Solenoid Pre−Discharge Timer:		
	Fire Detection Panel Keypad Control Panel UD7A5A1	(1) Set the Pre−discharge timer for 0 seconds by pressing the following keys at the keypad:	
		Program Pre−Dis Time Sol 1 Dis Time Sol 3 Pre−Dis Time Sol 3 Alarm 2 Silence Alarm 1 Silence	Prog − − − − − − − − − − (Pre−set time is displayed)
		(2) Using arrow keys (up and down) set the displayed time to **0** sec. then press **Enter**	LED is illuminated SAFE is displayed.
	c. Set the Solenoid Discharge Timer:		
	Fire Detection Panel Keypad Control Panel UD7A5A1	(1) Set the Discharge timer for 0 min. by pressing the following keys at the keypad:	
		Program Dis Time Sol 1 Dis Time Sol 3 Pre−Dis Time Sol 3 Alarm 2 Silence Alarm 1 Silence	Prog − − − − − − − − − − (Pre−set time is displayed)
		(2) Using arrow keys (up and down) set the displayed time to **0** min. then press **Enter**	LED is illuminated SAFE is displayed and Discharge timer is set

− − − − −

[1] For systems with Micro Junior Control Panel refer to Table A−1 in Appendix A.

Table 2−3. Fire Detection Subsystem Power−up Procedures
(for Micro 1 EV Control Panel [1]) (continued)

Step	Equipment	Action	Indication/Reference
		NOTES	
		In the following steps (X) is the present option.	
		Refer to NWS EHB 6−551−4 COTS Manual, paragraph 5.0, step B and Options list for an explanation of the options.	
		The following steps, d through j are performed from the Fire Control Panel keypad to program Options 01 through 05 and 07.	
	d. Set the Method of Detection (01) Option:		
	Fire Detection Panel Keypad Control Panel UD7A5A1	(1) Set the Method of Detection to Cross Zone by pressing the following keys at the keypad.	
		Program	`Prog`
		*	`– – – –`
		Dis Time Sol 3	`– – –`
		Pre−Dis Time Sol 3	`– –`
		Alarm 2 Silence	`–`
		Alarm 1 Silence	`01X` is displayed
		(2) Press arrow keys (up and down) until option `012` is displayed, then press **Enter**	LED is illuminated `02X` is displayed.
	e. Set the Manual Discharge Input Operation (02 Option):		
		Press arrow keys (up and down) until option `022` is displayed, then press **Enter**	`03X` is displayed
	f. Set the Abort Switch Input Operation (03 Option):		
		Press arrow keys (up and down) until option `032` is displayed, then press **Enter**	`04X` is displayed

– – – – –

1 For systems with Micro Junior Control Panel refer to Table A−1 in Appendix A.

Table 2−3. Fire Detection Subsystem Power−up Procedures
(for Micro 1 EV Control Panel [1]) (continued)

Step	Equipment	Action	Indication/Reference
	g. Set the Auxiliary Output Operation (04 Option):		
		Press arrow keys (up and down) until option `041` is displayed, then press **Enter**	`05X` is displayed
	h. Set the Alarm Output Operation (05 Option):		
		Press arrow keys (up and down) until option `051` is displayed, then press:	
		Enter	`06X` is displayed
		Enter	`07X` is displayed
	i. Set the Battery Supervision (07 Option):		
		Press arrow keys (up and down) until option `071` is displayed, then press **Enter**	`08X` is displayed
	j. Store the Selected Options:		
		Press the following key at the keypad.	
		Program	`SAFE` is displayed

CAUTION

Failure to set the Solenoids Switch SW1 to OFF upon completion of the Fire Control Panel programming may result in the burning of the 68 ohm resistor across terminals 23 and 24 when the Fire Control Panel is tested to trip the Main PDP UD7A2 Main Breaker.

– – – – –

[1] For systems with Micro Junior Control Panel refer to Table A−1 in Appendix A.

Table 2−3. Fire Detection Subsystem Power−up Procedures
(for Micro 1 EV Control Panel [1]) (continued)

Step	Equipment	Action	Indication/Reference
	k. Set the Solenoids Switch SW1 to OFF:		
	Fire Detection Panel Mother Board UD7A5A1 Solenoids On/Off Switch SW1	Set SW1 to the **OFF** (up) position.	

– – – – –

[1] For systems with Micro Junior Control Panel refer to Table A−1 in Appendix A.

Table 2−4. Security and Auxiliary Subsystem Power−up Procedures

Step	Equipment	Action	Indication/Reference
1.	Security Panel UD7A12	Turn security panel key to CCW position	
2.	Magnetic Contact Switches • UD10S3 • UD11S1 • UD7S1 • UD60A6A1−A3	a. Close generator shelter door b. Close tower gate c. Close RDA equipment shelter door d. Close TPMS shelter doors (3 for Type 1, 2, and 4 or single door for Type 5, 6, and 9)	
3.	Security Panel UD7A12	Momentarily press **SECURITY RESET** switch	
		NOTE The RDADP UD5 must be powered up (energized) to provide 28 Vdc for the temperature sensors and Radome Interlock UD11S2 switch #1. RDADP also provides 5 Vdc for Clogged Filter Indicators UD7A14, A15, A16, Air Conditioner Compressor UD7AC1A1, AC2A1 Shutoff Relay Contact, Security Panel Alert Relay Contacts, and Radome Hatch UD11S2 switch #2. The RDADP must be initialized prior to performing verification.	
4.	AC Distribution Panel UD5A14	Set the AC Distribution Panel circuit breaker to **ON**	a. Blowers operate b. UD5PS1, PS2, PS3 POWER ON indicators lit

Table 2−5. RPIE Power Shutdown Procedures

Step	Equipment	Action	Indication/Reference
1.	MLOS Shelter Power Distribution Panel (Figure 1−17)		
		WARNING Main Disconnect CB1 and CB3 and the Aircraft Warning Lights CB4 remain in ON position at all times. Aircraft Warning Lights (if equipped) must be illuminated during hours of darkness to light an aircraft hazard area.	
	a. Heater Circuit Breakers	Set CB6 and 8 to **OFF**	
	b. MLOS Transceiver Breaker Circuit	Set CB2 to **OFF**	
	c. Lighting and Smoke Alarm Circuit Breaker	Set CB9 to **OFF**	
	d. Vent System Circuit Breaker	Set CB7 to **OFF**	
	e. Receptacle Circuit Breaker	Set CB5 to **OFF**	
2.	RDA Equipment Shelter Secondary Power Distribution Panel UD7A3 (Figure 1−15)	The associated equipment must be powered down prior to setting the circuit breakers in this panel to **OFF**. Perform RDA Group Shutdown procedures per paragraph 3−5.4.	
	a. Transmitter Circuit Breakers	Set CB1, 3, and 5 to **OFF**	
	b. Transmitter Utility Outlet Circuit Breaker	Set CB7 to **OFF**	
	c. RBDDS Circuit Breaker (DoD Only)**	Set CB9 to **OFF**	

– – – – –

* Site dependent. Sites can contain from zero to three Radome Heaters.

** Site dependent.

Table 2−5. RPIE Power Shutdown Procedures (continued)

Step	Equipment	Action	Indication/Reference
	d. Fire Detection Subsystem Panel Circuit Breaker	CB13 remains **ON** except during maintenance on the Fire Detection System	For Fire Detection
2. Cont.	e. RDA Data Processor Circuit Breakers	Set CB15, 17, and 19 to **OFF**	
	f. RPG Circuit Breakers	Set CB25, 27, and 29 to **OFF**	
	g. Pedestal Motor Circuit Breakers	Set CB2, 4, and 6 to **OFF**	
	h. W/G Pressurization Unit Circuit Breaker	Set CB8 to **OFF**	
	i. Receptacles Circuit Breaker**	Set CB10 remains **ON** for TELCO circuits	
	j. TELCO (Sprint) Circuit Breaker**	CB14 remains **ON** for TELCO circuits	
	k. Signal Processor Circuit Breakers	Set CB16 and 18 to **OFF**	
	l. TELCO (MCI) Circuit Breaker**	CB20 remains **ON** for TELCO circuits	
	m. MLOS Shelter Circuit Breakers**	CB24 and 26 to remain **ON** to power Aircraft Warning Lights, if installed	
3.	RDA Equipment Shelter Main Power Distribution Panel UD7A2 (Figure 1−14)		

NOTE

Circuit breakers CB38, 40, and 42 provide power to the TPMS shelter and environment control units to provide proper cooling/heating for the TPS unit and batteries. Battery life is degraded when ambient temperature is at/above 80°F. Refer to Table 2−8 for TPS shutdown procedures and NWS EHB 6−554−5, TPS Service Manual.

− − − − −

* Site dependent. Sites can contain from zero to three Radome Heaters.

** Site dependent.

Table 2−5. RPIE Power Shutdown Procedures (continued)

Step	Equipment	Action	Indication/Reference
	a. TPMS Power Distribution Panel UD60A5 Circuit Breakers	CB38, 40 and 42 remain **ON** except during maintenance on the TPMS PDP UD60A5.	

− − − − −

* Site dependent. Sites can contain from zero to three Radome Heaters.

** Site dependent.

Table 2−5. RPIE Power Shutdown Procedures (continued)

Step	Equipment	Action	Indication/Reference
3. Cont.			
		NOTE Either Air Conditioner #1 CB2, 4, 6 or Air Conditioner #2 CB12, 14, 16 must be set to **ON** when RDA shelter major system equipment is on (operating) to ensure proper shelter cooling.	
	b. Air Conditioner #1 Circuit Breakers	See NOTE above	
	c. Air Conditioner #2 Circuit Breakers	See NOTE above	
	d. Shunt Trip Circuit System Circuit Breaker	CB30 remains in **ON** position	
	e. Transmitter Ventilation System Circuit Breaker	CB22 remains **ON** when the radar transmitter is in an operational or standby condition	
	f. Aircraft Warning Lights (if equipped) Circuit Breaker	CB19 remains **ON** except during maintenance on the warning light circuitry	FAA regulation
	g. Receptacles Circuit Breaker	Set CB8 and CB10 to **OFF**	CB10 re−located to Secondary PDP at some sites
	h. Security Alarm Circuit Breaker	CB41 remains **ON** except when maintenance is performed	
	i. Radome Vent Circuit Breaker	Set CB17 to **OFF**	
	j. Tower Stair Lights Circuit Breaker	Set CB15 to **OFF**	

− − − − −
* Site dependent. Sites can contain from zero to three Radome Heaters.
** Site dependent.

Table 2−5. RPIE Power Shutdown Procedures (continued)

Step	Equipment	Action	Indication/Reference
	k. Radome Lights/ Receptacles Circuit Breaker	Set CB13 to **OFF**	

− − − − −

* Site dependent. Sites can contain from zero to three Radome Heaters.

** Site dependent.

Table 2−5. RPIE Power Shutdown Procedures (continued)

Step	Equipment	Action	Indication/Reference
3. Cont.			
	NOTE The normal position for the Radome heater circuit breakers is OFF. The only time that the circuit breakers are set to ON is when maintenance is being performed on the Antenna Pedestal or Radome equipment during cold weather.		
	l. Radome Heater #1* Circuit Breakers	Set CB7, 9, and 11 to **OFF**	
	m. Radome Heater #2* Circuit Breakers	Set CB27, 29, and 31 to **OFF**	
	n. Radome Heater #3* Circuit Breakers	Set CB33, 35, and 37 to **OFF**	
	o. Interior, Exterior Light Circuit Breaker	Set CB18 to **OFF**	RDA shelter lights are not lit.
	p. 200 Amp Service Circuit Breaker Assembly	Set to **OFF**	
4.	Generator Shelter Power Distribution Panel UD10A2 (Figure 1−13)		
	NOTE The only time the main disconnect circuit breakers CB1 and 3 are set to OFF is when maintenance is required to be performed on the Auto−Transfer Switch.		
	a. Main Disconnect Circuit Breakers	Observe CB1 and 3 are **ON**	
	b. Room Heater Circuit Breakers	Set CB6 and 8 to **OFF**	

− − − − −
* Site dependent. Sites can contain from zero to three Radome Heaters.
** Site dependent.

Table 2−5. RPIE Power Shutdown Procedures (continued)

Step	Equipment	Action	Indication/Reference
4. Cont.	c. Receptacles Circuit Breaker	Set CB4 to **OFF**	
	NOTE The only time that Generator Block Heater circuit breaker CB2 is set to OFF is when the heater element is to be replaced or the generator will be offline for a prolonged period of time.		
	d. Generator Block Heater Circuit Breaker	Observe CB2 is **ON**	
	e. Louvers and Fans Circuit Breaker	Set CB7 to **OFF**	
	f. Interior and Exterior Lights Circuit Breaker	Set CB5 to **OFF**	
5.	Generator 80 kw		
	a. Onan Generator Control Panel	Set RUN−STOP(RESET)−REMOTE switch to **STOP**	
	b. Kohler Generator Control Panel	Set RUN−OFF/RESET−AUTO switch to **OFF**	
6.	Transition Power Source (TPS) UD62	Shutdown TPS unit. Refer to Table 2−8	
7.	TPMS Shelter Power Distribution Panel System UD60A5 (Figure 1−16, sheets 1 and 2)		
	a. Receptacles Circuit Breaker	Set CB2 to **OFF**.	
	b. Lavatory Receptacle Circuit Breaker	Set CB6 to **OFF**.	
	c. Lighting Circuit Breaker	Set CB11 to **OFF**.	

− − − − −
* Site dependent. Sites can contain from zero to three Radome Heaters.
** Site dependent.

Table 2−5. RPIE Power Shutdown Procedures (continued)

Step	Equipment	Action	Indication/Reference
7. Cont.	d. Environmental Control Unit Circuit Breakers	Set CB3/5 to **OFF**. (Type 4 ECU #1, 5, 6, and 9) Set CB8/10 to **OFF**. (Type 1 and 2) Set CB13/15 to **OFF** (Type 4 ECU #2)	
	e. Electric Toilet Circuit Breaker	Set CB7 to **OFF**. (Type 1, 4, 5, and 9)	
	f. Main Disconnect Circuit Breaker	Set MAIN BREAKER to **OFF**.	
	CAUTION Prior to turning off power to the Auto−Transfer Switch, power to the generator must be turned off first. Relays inside the Auto−Transfer Switch will detect loss of utility power and will activate the generator.		
8.	Utility Main Power Disconnect UD10S1	Set Utility Main Power Disconnect switch UD10S1 to **OFF**	

− − − − −

* Site dependent. Sites can contain from zero to three Radome Heaters.

** Site dependent.

Table 2−6. RDA Tower/Utilities Operational Check Procedures

Step	Equipment	Action	Indication/Reference
		NOTES	
		Perform step 1 when the RDA Maintenance Terminal is not in the application mode of operation (menu displayed).	
		If main menu is not displayed, type **MAIN** on command line and press **<Enter>** key. Main menu will then be displayed; perform step 2.	
1.	RDA Maintenance Terminal UD5A33	Use mouse and click on Applications screen or press **<Alt>** and **<Tab>** keys simultaneously	`Application Main Menu` appears on monitor
2.	RDA Maintenance Terminal UD5A33	Type **DIPD<Tab>TOW <Enter>**	`Performance Data Tower Utilities Menu #1` appears on monitor
3.	RDA Maintenance Terminal UD5A33	Check performance data	Refer to Table 2−7.
4.	RDA Maintenance Terminal UD5A33	Type **PAGE F**	`Performance Data Tower Utilities Menu #2` appears on monitor
5.	RDA Maintenance Terminal UD5A33	Check performance data	Refer to Table 2−7.

Table 2−7. Tower Utility Performance Data Parameters

Item	Condition Operation	Fault
AC #1 COMPRESSOR	OK	SHUTOFF
AC #2 COMPRESSOR	OK	SHUTOFF
TRANS PWR SOURCE	ON	OFF
AC #1 AIR TEMPERATURE	_ °C	
AC #2 AIR TEMPERATURE	_ °C	
AC #1 FILTER	OK	DIRTY
AC #2 FILTER	OK	DIRTY
PWR XFER SWITCH	MAN/AUTO	
PWR SOURCE	UTIL/GEN	
GEN BATTERY VOLTAGE	OK	LOW
GEN ENGINE	OK	FAIL
GEN VOLT/FREQ	NOT/AVAIL*	NOT AVAIL
UTIL VOLT/FREQ	AVAIL*	NOT AVAIL
GEN SHELTER	OK	FIRE
GEN SH FIRE SYS	OK	FAIL
GEN SHLTR TEMP	_ °C	
GEN FUEL LEVEL	_ %	
GEN MAINT REQD	NO	YES
EQUIP SHELTER	OK	FIRE
EQUIP SH FIRE SYS	OK	FAIL
EQUIP SH TEMP	_ °C	
RADOME HATCH	CLOSED	OPEN
RADOME AIR TEMP	_ °C	
OUTSIDE TEMP	_ °C	
XMTR AIR TEMP	_ °C	
AIRCRAFT LIGHTING	OK	FAIL
SITE SECURITY	OK	ALARM
SECURITY EQUIP	OK	FAIL
SECURITY SYS	OK	DISABLED
DAU TEST 0	**	
DAU TEST 1	**	
DAU TEST 2	**	
UART	OK	FAIL

– – – – –

* Under normal conditions Utility voltage is available and Generator voltage is not available, unless Generator is supplying site power, then conditions would be reversed.

** DAU Test 0 range 7−11
DAU Test 1 range 118−136
DAU Test 2 range 221−252

Table 2−7. Tower Utility Performance Data Parameters (continued)

Item	Condition Operation	Fault
MC +28V PS	_ V	
MC +15V PS	_ V	
MC +5V PS	_ V	
MC −15V PS	_ V	
CHAN IN CONTROL	YES	NO
INT PROC RESPONSE	NA/NO/YES	

− − − − −

* Under normal conditions Utility voltage is available and Generator voltage is not available, unless Generator is supplying site power, then conditions would be reversed.

** DAU Test 0 range 7−11
DAU Test 1 range 118−136
DAU Test 2 range 221−252

Table 2−8. Removing the TPS from Normal Operation/TPS Shutdown Procedure

Step	Equipment	Action	Indication/Reference
		CAUTION The TPS batteries remain a source of lethal voltage within the TPS Cabinet until the Battery Cabinet Disconnect breaker has been turned OFF (opened). Within the Battery Cabinet, the lethal battery voltage is ALWAYS present. Use a voltmeter to verify that the terminations of any components are de−energized prior to touching.	
		NOTE This procedure assumes the site critical load will be supplied via the TPS Maintenance Fused Disconnect Switch UD61A5S2 or the Maintenance Bypass Module UD64 Maintenance Bypass Breaker (MBB) UD64CB2 following TPS shutdown.	
1.	TPS Control Panel UD62A6	Turn the MODE switch to **BYPASS** position. Wait for indication to BYPASS mode.	Monitor Panel Graphics−Mimic LCD screen displays ON Bypass. Bypass LED symbol lights.
2.	TPS Control Panel UD62A6	Turn BATTERY switch to the **OFF** position.	Monitor Panel Graphics−Mimic LCD screen displays Battery Contactor K2 open.
3.	TPS Control Panel UD62A6	Turn CB1 to **OFF** position.	TPS shuts down. TPS Bypass circuit provides power to RDA.
		NOTE Sites with disconnect switches (TPMS Types 1, 2, and 4) perform step 4. Sites with a Maintenance Bypass Module (Types 4, 5, 6, and 9) perform step 5.	
4.	a. Maintenance Bypass Fused Disconnect UD61A5S2	Set disconnect UD61A5S2 to the **ON** (closed) position.	Provides parallel power feed to RDA critical power circuit (Contactor and Secondary PDP).

Table 2−8. Removing the TPS from Normal Operation/TPS Shutdown Procedure (continued)

Step	Equipment	Action	Indication/Reference
4. Cont.	b. Output Fused Disconnect UD61A5S3	Set disconnect UD61A5S3 to the **OFF** (open) position. Install lockout/tagout device.	Removes TPS parallel feed to RDA shelter critical load.
	c. Input Fused Disconnect UD61A5S1	Set disconnect UD61A5S1 to the **OFF** (open) position. Install lockout/tagout device.	Removes AC power from TPS unit. LCD display goes blank and fans stop. TPS unit is now completely isolated.
5.	a. Maintenance Bypass Module UD64	Set MBB breaker UD64CB2 (top breaker) to the **ON** position.	Provides parallel power feed to RDA critical power circuit (Contactor and Secondary PDP).
	b. Maintenance Bypass Module UD64	Set UOB breaker UD64CB3 (middle breaker) to the **OFF** position. Install lockout/tagout device.	Removes TPS parallel feed to RDA shelter critical load.
	c. Maintenance Bypass Module UD64	Set UIB breaker UD64CB1 (bottom breaker) to the **OFF** position. Install lockout/tagout device.	Removes AC power from TPS unit. LCD display goes blank and fans stop. TPS unit is now completely isolated.
6.	Battery Cabinet UD63	Set the Battery Disconnect Breaker to the OFF position.	Blocks battery voltage from going to TPS Cabinet.

Table 2−9. TPS Power−up/Restoring TPS to Normal Operation Procedure

Step	Equipment	Action	Indication/Reference
	NOTES This procedure assumes the TPS unit is completely shut down and the site critical load is supplied via the TPS Maintenance Fused Disconnect Switch UD61A5S2 or the Maintenance Bypass Breaker (MBB) UD64CB2 in the Maintenance Bypass Module UD64 following a TPS shutdown. Sites with disconnect switches (TPMS Types 1, 2, and 4) perform step 1. Sites with a Maintenance Bypass Module (Types 4, 5, 6, and 9) perform step 2.		
1.	a. Disconnect Switches UD61A5S1 (Input) and UD61A5S3 (Output)	Remove lockout/tagout devices, if installed.	
	b. Input Fused Disconnect UD61A5S1	Set disconnect UD61A5S1 to the **ON** (closed) position.	Applies power to TPS unit. Monitor Panel LCD screen turns on and fans start.
	c. Output Fused Disconnect UD61A5S3	Set disconnect UD61A5S3 to the **ON** (closed) position.	TPS bypass circuit parallel feeds load.
	d. Maintenance Bypass Fused Disconnect UD61A5S2	Set disconnect UD61A5S2 to the **OFF** (open) position.	Removes maintenance bypass parallel feed. Critical load fed by TPS bypass circuits.
2.	a. Maintenance Bypass Module UD64	Remove lockout/tagout devices, if installed.	
	b. Maintenance Bypass Module UD64	Set Unit Input Breaker (UIB) UD64CB1 (bottom breaker) to the **ON** position.	Applies power to TPS unit. Monitor Panel LCD screen turns on and fans start.
	c. Maintenance Bypass Module UD64	Set Unit Output Breaker (UOB) UD64CB3 (middle breaker) to the **ON** position.	TPS bypass circuit parallel feeds load.

Table 2−9. TPS Power−up/Restoring TPS to Normal Operation Procedure (continued)

Step	Equipment	Action	Indication/Reference
2. Cont.	d. Maintenance Bypass Module UD64	Set Maintenance Bypass Breaker (MBB) UD64CB2 (top breaker) to the **OFF** position.	Removes maintenance bypass parallel feed. Critical load fed by TPS bypass circuits.
3.	Battery Cabinet UD63	Set the Battery Disconnect Breaker to the **ON** position.	Applies battery voltage to TPS Cabinet K2 contactor.
4.	TPS Control Panel UD62A6	Verify the PUSH TO RESET button is pressed in.	Enables CB1 to be turned on.
5.	TPS Control Panel UD62A6	Set CB1 to the **ON** position.	
6.	TPS Control Panel UD62A6	Turn BATTERY switch to the **NORMAL** position.	Enables K2 contactor.
7.	TPS Control Panel UD62A6	Turn MODE switch to the **NORMAL** position.	
8.	TPS Control Panel UD62A6	Turn START key switch to the right momentarily and release.	TPS transfers to normal, on−line mode. On Monitor Panel, verify the green sine−wave LED symbol is lit.
9.	Monitor Panel Arrows Key Pad UD62A5	Use left and right arrow keys to move cursor on menu bar to **Meters**. Use up and down arrow keys to select **System**.	Review LCD display for normal range of voltages and frequency.

CHAPTER 3

SYSTEM MAINTENANCE

SECTION 3−1. GENERAL DESCRIPTION

3−1.1 GENERAL.

This chapter contains Real Property Installed Equipment (RPIE) system maintenance procedures. These procedures cover RPIE system maintenance as follows:

- Section 3−1 General Description.
- Section 3−2 Checkout Procedures. Provides step−by−step procedures required to verify the normal operation of the system or subsystem.
- Section 3−3 Troubleshooting Procedures. Provides step−by−step procedures in logical sequence to isolate the malfunction to the faulty Line Replaceable Unit (LRU) or component.
- Section 3−4 Preventive Maintenance. Provides general preventive maintenance definition and refers technician to NWS EHB 6−503−2 or NWS EHB 6−503 for a list of RPIE Preventive Maintenance Inspection (PMI) cards.
- Section 3−5 Removal and Replacement Procedures. Provides step−by−step removal and replacement procedures for RPIE LRUs and components.
- Section 3−6 Alignment and Adjustment Procedures. Step−by−step alignment and adjustment procedures necessary to return RPIE equipment to a serviceable standard.

SECTION 3−2. CHECKOUT PROCEDURES

3−2.1 INTRODUCTION.

To verify satisfactory major RPIE subsystem operations, refer to Table 3−1 for an index of system operational checkout procedures. The WSR−88D system basic condition or mode of operation requirements is stated in the paragraph(s) for each operational check accomplished as well as why the check is performed. The appropriate troubleshooting reference is made whenever the check reveals a possible equipment malfunction.

Table 3−1. RPIE System Checkout Index

Item	Check	Paragraph	Table
1.	Air Conditioner Without Economizer Control Circuitry Operation Check	3−2.2	Table 3−2
2.	Air Conditioner With Economizer Control Circuitry Operation Check	3−2.3	Table 3−3
3.	Transmitter Venting Control Circuitry Operational Check	3−2.4	Table 3−4
4.	Generator Shelter Venting Control Circuitry Operational Check	3−2.5	Table 3−5
5.	Generator Venting Control Circuitry Operational Check	3−2.6	Table 3−6
6.	Generator Shelter Heating Control Circuitry Operational Check	3−2.7	Table 3−7
7.	Radome Venting Control Circuitry Operational Check	3−2.8	Table 3−8
8.	RDA Shelter Fire Detection Subsystem Control Circuitry Operational Check	3−2.9	Table 3−9
9.	Generator Shelter Thermal Detector Operational Check	3−2.10	Table 3−10
10.	Security Alarm Panel Control Circuitry Operational Check	3−2.11	Table 3−11
11.	Air Conditioner Exhaust Air Temperature Sensor Operational Check	3−2.12	Table 3−12
12.	Transmitter Vent Exhaust Air Temperature Sensor Circuitry Operational Check	3−2.13	Table 3−13
13.	Clogged Filter Indicator Circuitry Operational Check	3−2.14	Table 3−14
14.	Exterior Air Temperature Sensor Circuitry Operational Check	3−2.15	Table 3−15

Table 3−1. RPIE System Checkout Index (continued)

Item	Check	Paragraph	Table
15.	Interior Air Temperature Sensor Circuitry Operational Check	3−2.16	Table 3−16
16.	Generator Shelter Air Temperature Sensor Circuitry Operational Check	3−2.17	Table 3−17
17.	Radome Air Temperature Sensor Circuitry Operational Check	3−2.18	Table 3−18
18.	Aircraft Warning Light Control Circuitry Operational Check	3−2.19	Table 3−19
19.	TPMS Environmental Control Unit Operational Check	3−2.20	Table 3−20
20.	TPMS Electric Toilet Operational Check	3−2.21	Table 3−21
21.	TPS Unit Operational Check	3−2.22	Table 3−22
22.	Hydrogen Detector Operational Check	3−2.23	Table 3−23

3−2.2 AIR CONDITIONER WITHOUT ECONOMIZER CONTROL CIRCUITRY OPERATIONAL CHECK.

The air conditioner operational check provides the checks necessary to determine that the air conditioner control circuitry functions properly in the cooling and heating modes. This check should be made during routine maintenance, upon repair of the AC components and after spring/fall switch over between air conditioners #1 and #2. These checks also checkout the associated AC monitoring circuitry and can be accomplished with the WSR−88D system in the full remote operational mode. Refer to Table 3−2 for AC checks without an economizer.

Table 3−2. Air Conditioner #1 or #2 Control Circuitry Verification of Operation Check

Step	Equipment	Action	Indication/Reference
		NOTE Ensure that applicable power−up procedures in Table 2−1 are completed prior to performing this check.	
1.	Thermostat UD7S3 (AC#1)/ UD7S4 (AC#2)	Move selected thermostat cooling lever down until AC#1/AC#2 operates.	Air conditioner operates; if not, refer to para. 3−3.3.1, Troubleshooting Procedure.
		Return cooling lever to original setting 70°F or 75°F as applicable.	
2.	Thermostat UD7S3 (AC#1)/ UD7S4 (AC#2)	Move selected thermostat heat lever up until AC#1/ AC#2 heater operates.	Heater operates; if not, refer to para. 3−3.3.1, Troubleshooting Procedure.
		Return heat lever to original setting 50°F or 55°F as applicable.	

3−2.3 AIR CONDITIONER WITH ECONOMIZER CONTROL CIRCUITRY OPERATIONAL CHECK.

The air conditioner with economizer operational check includes those checks necessary to determine that air conditioners with economizer control circuitry function properly in the AC mechanical and/or outside air vent cooling modes. These checks are made during routine maintenance, repair of the AC components and during spring/fall switch over between air conditioners #2 and #1. These checks also checkout AC monitoring circuitry and can be accomplished with the WSR−88D system in the full remote operational mode. Refer to Table 3−3 for AC checks with an economizer.

Table 3−3. Air Conditioner AC2 Economizer Control Circuitry Verification of Operation Check

Step	Equipment	Action	Indication/Reference
		NOTE Ensure that applicable power−up procedures in Table 2−1 are completed prior to performing this check.	
1.	AC#1 UD7AC1	Thermostat UD7S3 cooling selector set at 70°F (spring/summer conditions).	AC#1 is operating.
2.	AC#2 UD7AC2	Thermostat UD7S4 cooling selector set at 75°F (spring/summer conditions).	AC#2 is not operating.
3.	AC#2 UD7AC2	For model 60WA, remove eleven sheet metal screws and the control access panel from the side of economizer hood.	Access economizer ECW−4A damper minimum position potentiometer.
		For models WA601 or WA602, remove four sheet metal screws and the service access panel. Release and remove mist filter. Open damper control box cover.	Access economizer EIFM−5A damper minimum position potentiometer.

Table 3−3. Air Conditioner AC2 Economizer Control Circuitry Verification of Operation Check (continued)

Step	Equipment	Action	Indication/Reference
		NOTE Enthalpy control (Figure 2−3) should be set at position “D”. Leave control set to this position.	
4.	Thermostat UD7S4	Set FAN switch to **ON**.	AC#2 evaporator blower starts. If not, refer to para. 3−3.3.1, Troubleshooting Procedure.
5.	AC#2 UD7AC2	Use flat blade screw−driver to cycle minimum position potentiometer (Figure 2−3) through its range.	Damper moves from fully closed to fully open position smoothly without obstruction. If not, refer to para. 3−3.3.1, Troubleshooting Procedure.
		Return potentiometer setting to its minimum position.	Damper is fully closed.
6.	Thermostat UD7S4	Set FAN switch to **AUTO**, Cooling Set Point lever to minimum (90ºF), and SYSTEM switch to **COOL**.	AC#2 evaporator blower stops. If not, refer to para. 3−3.3.1, Troubleshooting Procedure.
7.	Thermostat UD7S4	Lower Cooling Set Point lever setting to engage first stage cooling (blower on/compressor off). See note below.	AC#2 evaporator blower starts. AC#2 damper modulates to maintain mixed return/ outside air temperature provided outside air temperature is sufficiently low. If not, refer to para. 3−3.3.1, Troubleshooting Procedure.

Table 3−3. Air Conditioner AC2 Economizer Control Circuitry Verification of Operation Check (continued)

Step	Equipment	Action	Indication/Reference
		NOTE	
		If outside air enthalpy is too high for economizer operation, low enthalpy can be simulated by temporarily removing leads from terminals 2 and 3 of enthalpy control and jumping these terminals together. This will cause the damper to modulate away from its minimum position.	
8.	Thermostat UD7S4	Lower Cooling Set Point lever setting to engage second stage cooling (compressor).	AC#2 compressor starts. AC#2 damper returns to fully closed position. If not, refer to para. 3−3.3.1, Troubleshooting Procedure.
9.	Thermostat UD7S4	Set Cooling Set Point lever to 75°F and SYSTEM switch to **AUTO**. See note below.	AC#2 blower and compressor stop.
		NOTE	
		If installed, remove jumper from enthalpy control terminals 2 and 3 and reconnect leads to these terminals.	
10.	AC#2 UD7AC2	For models WA601 or WA602, close damper control box cover, reinstall mist filter, and reinstall service access panel using screws previously removed.	Economizer EIFM−5A is ready for operation.

Table 3−3. Air Conditioner AC2 Economizer Control Circuitry Verification of Operation Check (continued)

Step	Equipment	Action	Indication/Reference
10. Cont.		For model 60WA, reinstall control access panel on side of economizer hood using sheet metal screws previously removed.	Economizer ECW−4A is ready for operation.

NOTE

Refer to Table 1−6 for proper air conditioner setup/change over procedure.

3−2.4 TRANSMITTER VENTING CONTROL CIRCUITRY OPERATIONAL CHECK.

The transmitter venting operational check provides the checks necessary to determine that the transmitter venting control circuitry functions properly. These checks can be accomplished with the WSR−88D system in the full remote operational mode. Refer to Table 3−4.

Table 3−4. Transmitter Venting Control Circuitry Verification of Operation Check

Step	Equipment	Action	Indication/Reference
		NOTES	
		Ensure that applicable power−up procedures in Table 2−1 are completed prior to performing this check.	
		When transmitter inside vent louvers (UD7A9) are open, perform steps 1 through 3.	
		When transmitter inside vent louvers (UD7A10) are closed, perform steps 4 through 6.	
1.	Thermostat, Transmitter Venting UD7S5	Turn thermostat dial counter−clockwise until vent louvers move.	Inside vent louvers close. Outside vent louvers open. If not, refer to para. 3−3.3.3, Troubleshooting Procedure.
2.	Thermostat, Transmitter Venting UD7S5	Turn thermostat dial clockwise until vent louvers move.	Inside vent louvers open. Outside vent louvers close. If not, refer to para. 3−3.3.3, Troubleshooting Procedure.
3.	Thermostat, Transmitter Venting UD7S5	Set thermostat dial to 85°F	
4.	Thermostat, Transmitter Venting UD7S5	Turn thermostat dial clockwise until inside vent louvers move.	Inside vent louvers open. Outside vent louvers close. If not, refer to para. 3−3.3.3, Troubleshooting Procedure.

Table 3−4. Transmitter Venting Control Circuitry Verification of Operation Check (continued)

Step	Equipment	Action	Indication/Reference
5.	Thermostat, Transmitter Venting UD7S5	Turn thermostat dial counter−clockwise until inside vent louvers move.	Inside vent louvers close. Outside vent louvers open.
6.	Thermostat, Transmitter Venting UD7S5	Set thermostat dial to 85°F.	

3−2.5 GENERATOR SHELTER VENTING CONTROL CIRCUITRY OPERATIONAL CHECK.

The generator shelter venting check provides the checks necessary to determine that the generator shelter venting control circuitry functions properly. This check can be accomplished with the WSR−88D system in full remote operational mode. Refer to Table 3−5.

Table 3−5. Generator Shelter Venting Control Circuitry Verification of Operation Check

Step	Equipment	Action	Indication/Reference
		NOTES	
		Ensure that applicable power−up procedures in Table 2−1 are completed prior to performing this check.	
		The following steps perform phase 1 ventilation operational check with the generator not running.	
1.	Thermostat, Shelter Venting UD10S2	Turn thermostat dial counter−clockwise until exhaust fan motor runs.	Heater lockout relay energizes (loud noise). Exhaust fan louvers open. Intake Air Vent Louver, UD10A4 opens. If not, refer to para. 3−3.3.4, Troubleshooting Procedure.
2.	Thermostat, Shelter Venting UD10S2	Turn thermostat dial clockwise until exhaust fan motor stops running.	Heater lockout relay de−energizes. Exhaust fan motor stops. Exhaust fan louver closes. Intake air vent louver closes. If not, refer to para. 3−3.3.4, Troubleshooting Procedure.
3.	Thermostat, Shelter Venting UD10S2	Set thermostat dial to 85°F.	

3−2.6 GENERATOR VENTING CONTROL CIRCUITRY OPERATIONAL CHECK.

The generator venting operational check provides the checks necessary to determine that the generator venting control circuitry functions properly with the generator running and that the associated monitoring circuitry performs its function. The check can be accomplished with the WSR−88D system in the full remote operational mode. Refer to Table 3−6.

Table 3−6. Generator Venting Control Circuitry Verification of Operation Check

Step	Equipment	Action	Indication/Reference
		NOTES	
		Ensure that applicable power−up procedures in Table 2−1 are completed prior to performing this check.	
		The following steps perform phase 2 ventilation operation check with the generator running.	
		WARNING	
		Wear hearing protection near generator while it is in operation. Failure to wear proper hearing protection can cause serious injury or hearing loss.	
		CAUTION	
		Coolant level and oil levels should be checked prior to starting the generator. Any improper fluid levels must be corrected before starting generator.	
1.	Generator Control Panel UD10G1A1	For Onan Generators, set RUN−STOP(RESET)−REMOTE switch to **RUN**.	Engine starts.
		For Kohler Generators, set RUN−OFF/RESET−AUTO switch to **RUN**.	Engine starts.
			Oil pressure gauge reads 35 to 55 PSI.
			Coolant temperature gauge reads 170°F to 230°F within 5 minutes.
			DC Ammeter reads 0−35 amperes (charge rate).

Table 3−6. Generator Venting Control Circuitry Verification of Operation Check (continued)

Step	Equipment	Action	Indication/Reference
1. Cont.			RUN indicator lamp illuminates (Onan).
			Heater lockout relay energizes.
			Intake Vent Louvers UD10A4 and A5 open.
			Generator exhaust vent louvers open. If not, refer to para. 3−3.3.4, Troubleshooting Procedure.
2.	Generator Control Panel UD10G1A1	For Onan Generators, set RUN−STOP(RESET)−REMOTE switch to **STOP**.	Generator stops running.
		For Kohler Generators, set RUN−OFF/RESET−AUTO switch to **OFF/RESET**.	Generator stops running.
			Heater lockout relay de−energizes. Intake vent louvers close.
			Generator exhaust vent louvers close. If not, refer to para. 3−3.3.4, Troubleshooting Procedure.
			Red SWITCH OFF lamp flashes. (Onan)
			GENERATOR SWITCH NOT IN AUTO lamp illuminates. (Kohler)
3.	Generator Control Panel UD10G1A1	For Onan Generators, set RUN−STOP(RESET)−REMOTE switch to **REMOTE**.	SWITCH OFF indicator lamp stops flashing. If not, refer to para. 3−3.3.4, Troubleshooting Procedure.
		For Kohler Generators, set RUN−OFF/RESET−AUTO switch to **AUTO**.	GENERATOR SWITCH NOT IN AUTO lamp extinguishes.

3−2.7 GENERATOR SHELTER HEATING CONTROL CIRCUITRY OPERATIONAL CHECK.

The generator shelter heating operational check provides the checks necessary to determine that the generator shelter heating control circuitry functions properly. This check can be accomplished with WSR−88D system in the full remote operational mode. Refer to Table 3−7.

Table 3−7. Generator Shelter Heating Control Circuitry Verification of Operation Check

Step	Equipment	Action	Indication/Reference
		NOTES	
		Ensure that applicable power−up procedures in Table 2−1 are completed prior to performing this check.	
		Before proceeding, ensure that all louvers are closed. Open louver(s) indicate that either the shelter venting subsystem or generator venting subsystem are operating, or that a fault exists.	
1.	Heater UD10HR1	Turn thermostat control fully clockwise.	
2.	Heater UD10HR1	Press **HEAT** push−button.	Fan operates.
			Heat emanates. If not, refer to para. 3−3.3.5, Troubleshooting Procedure.
3.	Heater UD10HR1	Turn thermostat clock−wise until fan stops operating.	Fan stops. If not, refer to para. 3−3.3.5, Troubleshooting Procedure.
4.	Heater UD10HR1	Set thermostat control to position **2** or higher.	Temperature maintained at 50° to 60°F; if not, replace heater.

3−2.8 RADOME VENTING CONTROL CIRCUITRY OPERATIONAL CHECK.

The radome venting operational check provides the checks necessary to determine that the radome venting control circuitry functions properly. These checks require the WSR−88D system to be in the local standby mode with the transmitter circuit breakers OFF. Refer to Table 3−8.

Table 3−8. Radome Venting Control Circuitry Verification of Operation Check

Step	Equipment	Action	Indication/Reference
		NOTE Ensure that applicable power−up procedures in Table 2−1 are completed prior to performing this check.	
		WARNING The transmitter must be in standby, operational software program terminated, and transmitter high voltage circuit breaker CB1 set to **OFF** to prevent radiation hazard. Failure to perform the preliminary setup can cause serious injury or **DEATH** and damage to the equipment.	
1.	Transmitter UD3 and Pedestal UD2	Perform Initial Conditions/Preliminary Setup, paragraph 3−3.3.2.2, step 1 thru 5 to shutdown transmitter and secure the pedestal from rotating.	
2.	Thermostat, Radome UD2S2	Turn radome thermostat clockwise until radome fan operates.	Radome fan runs. Radome motorized damper opens. If not, refer to para. 3−3.3.2, Troubleshooting Procedure.
3.	Thermostat, Radome UD2S2	Turn radome thermostat counter−clockwise until radome fan stops.	Radome fan stops running. Radome motorized damper closes; if not, refer to para. 3−3.3.2, Troubleshooting Procedure.

Table 3−8. Radome Venting Control Circuitry Verification of Operation Check (continued)

Step	Equipment	Action	Indication/Reference
4.	Thermostat Radome UD2S2	Set radome thermostat to 85°F.	
5.	Pedestal UD2 and Transmitter UD3	Return the RDA to operation per procedures in paragraph 3−3.3.2.3, step 8.	

3−2.9 RDA SHELTER FIRE DETECTION SUBSYSTEM CONTROL CIRCUITRY OPERATIONAL CHECK.

The RDA Shelter Fire Detection Subsystem operational check provides the checks necessary to determine that the fire detection control circuitry functions properly and that the associated monitoring circuitry performs its function. These checks can be accomplished with the WSR−88D system in full remote operational mode. Refer to Table 3−9.

Table 3−9. RDA Shelter Fire Suppression Subsystem Circuitry Verification of Operation Check[1]

Step	Equipment	Action	Indication/Reference
		NOTE Ensure that applicable power−up procedures in Table 2−1 are completed prior to performing this check. Also, ensure that RDA Group Startup procedures in NWS EHB 6−510, paragraph 6−5.3.2, have been completed.	
1.	Micro 1 EV UD7A5 Control Panel	Reset alarm panel by depressing **Reset** button on the Fire Detection Subsystem Control Panel key pad.	AC power LED illuminated. If not, ensure RDA equipment shelter Main Power Distribution Panel UD7A2 CB30 (Shunt Trip) and Secondary PDP UD7A3 CB13 (Fire Detection Panel) are both **ON**. Refer to Micro 1−EV Control Panel manual 6−551−4 for troubleshooting procedure and perform steps in Table 2−3, Fire Detection Subsystem Power−up. (Figure 3−2, sheet 1).
		NOTE If application menu is displayed, go to step 3.	

[1] For systems with Micro Junior Control Panel, refer to Table A−2 in Appendix A.

Table 3−9. RDA Shelter Fire Suppression Subsystem Circuitry Verification of Operation Check[1] (continued)

Step	Equipment	Action	Indication/Reference
2.	RDA Maintenance Terminal UD5A33	If the Applications menu is not displayed, use mouse and click on Applications screen or press **<Alt>** and **<Tab>** keys simultaneously.	Applications Main menu appears.
3.	RDA Maintenance Terminal UD5A33	Type **MAIN** on command line and press **<Enter>** key.	Main menu is displayed.
		a. Type **DIPD<Tab>TOW** and press **<Enter>** key.	`Performance Data Tower Utilities Menu #1` appears on monitor.
		b. Check menu using Table 2−7.	The following status messages appear `EQUIP SHELTER OK` `EQUIP SH FIRE SYS OK`
4.	a. RDA Secondary PDP UD7A3	Set CB13 (Fire Detection Panel) to **OFF**.	AC power LED (green) extinguishes. After 45 ± 10 sec.: •General trouble LED is illuminated. • Buzzer Sounds.
	b. RDA Secondary PDP UD7A3	Set CB13 (Fire Detection Panel) to **ON**.	
	c. Fire Detection Subsystem Control Keypad	Press **Reset** button.	AC power LED (green) illuminates. `SAFE` is displayed.

[1] For systems with Micro Junior Control Panel, refer to Table A−2 in Appendix A.

Table 3−9. RDA Shelter Fire Suppression Subsystem Circuitry Verification of Operation Check[1] (continued)

Step	Equipment	Action	Indication/Reference
5.	BATTERY TEST		
	a. Fire Detection Subsystem Control Keypad	Press **Battery Test** button.	After 10 sec. `PASS` is displayed followed by `SAFE`.
6.	LAMP TEST		
	a. Fire Detection Subsystem Control Keypad	Press **Lamp Test** button.	Observe that all lights and LEDs illuminate for approximately 5 sec. `SAFE` is displayed.
7.	CLEAR THE ALARM RECALL MEMORY		
	a. Fire Detection Subsystem Control Keypad	a. Press the following keys and observe the response.	
		Program	`Prog`
		Alarm Recall	`– – – –`
		*	`– – –`
		Program	`– –`
		Alarm Recall	`–`
		Enter	`SAFE`
		b. Verify all alarms are cleared from memory. Press the **Alarm Recall** key.	`––––` followed by `SAFE`

– – – – –

[1] For systems with Micro Junior Control Panel, refer to Table A−2 in Appendix A.

3−2.10 GENERATOR SHELTER THERMAL DETECTOR OPERATIONAL CHECK.

The thermal detector operational check provides the checks necessary to determine that the thermal detector functions properly and that the associated monitoring circuitry performs its function. These checks can be accomplished with the WSR−88D system in full remote operational mode. Refer to Table 3−10.

Table 3−10. Generator Shelter Thermal Detector Circuitry Verification of Operation Check

Step	Equipment	Action	Indication/Reference
		NOTE Ensure that applicable power−up procedures in Table 2−1 are completed prior to performing this check. Also, ensure that RDA Group Startup procedures in NWS EHB 6−510, paragraph 6−5.3.2, have been completed.	
1.	RDA Maintenance Terminal UD5A33	If the Applications menu is not present, use mouse and click on Applications screen or press **<Alt>** and **<Tab>** keys simultaneously.	Applications Main menu appears.
2.	RDA Maintenance Terminal UD5A33	Check monitor for generator shelter smoke/ fire alarm message.	No generator shelter smoke/fire alarm message appears on monitor.
		NOTE Refer to NWS EHB 6−503−2, PMI workcard 2−040, for annual preventive maintenance inspection. Perform PM testing every 12 months.	

3−2.11 SECURITY ALARM PANEL CONTROL CIRCUITRY OPERATIONAL CHECK.

The security alarm panel operational check provides the checks necessary to determine that the security panel and magnetic sensors on the RDA, generator, and TPMS shelter doors and tower gate function properly and that its associated monitoring circuitry performs its function. These checks can be accomplished with the WSR−88D system in full remote operation. Refer to Table 3−11.

Table 3−11. Security Alarm Panel Control Circuitry Verification of Operation Check

Step	Equipment	Action	Indication/Reference
		NOTES	
		Ensure that applicable power−up procedures in Table 2−1 are completed prior to performing this check. Also, ensure that RDA Group Startup procedures in NWS EHB 6−510, paragraph 6−5.3.2, have been completed	
		Two technicians are required to perform this test or communication with the MSCF is required.	
1.	Generator Shelter UD10	Ensure shelter door is closed.	
2.	Tower UD11	Ensure tower entry gate is closed.	
3.	TPMS Shelter UD60	Ensure shelter doors are closed.	TPMS Types 5 thru 9 only have one door.
4.	RDA Equipment Shelter UD7	Insert security key into the security key switch.	
		NOTE	
		To disarm Security System, turn switch clockwise (CW). To arm Security System, turn switch counter−clockwise (CCW).	
5.	RDA Equipment Shelter UD7	Turn security key fully CW and remove key.	
6.	RDA Equipment Shelter UD7	Enter equipment shelter and close door.	

Table 3−11. Security Alarm Panel Control Circuitry Verification of Operation Check (continued)

Step	Equipment	Action	Indication/Reference
7.	Security Panel UD7A12	Set Security Panel power ON/OFF switch to **OFF**.	`SECURITY SYSTEM EQUIPMENT FAIL` message appears on RDA Maintenance Terminal Monitor. If not, refer to paragraph 3−3.3.6, Troubleshooting Procedure.
8.	Security Panel UD7A12	Set Security Panel power ON/OFF switch to **ON**.	`SECURITY SYSTEM EQUIPMENT FAIL` message disappears on RDA Maintenance Terminal Monitor. If not, refer to paragraph 3−3.3.6, Troubleshooting Procedure.
9.	RDA Equipment Shelter UD7	Exit equipment shelter and ensure door is closed.	
10.	RDA Equipment Shelter UD7	Insert security key into the security key switch.	
11.	RDA Equipment Shelter UD7	Turn security key fully CCW in security key switch.	
12.	RDA Equipment Shelter UD7	Open RDA equipment shelter door and enter shelter.	`UNAUTHORIZED SITE ENTRY` message appears on RDA Maintenance Terminal Monitor. If not, refer to para. 3−3.3.6, Troubleshooting Procedure.
13.	RDA Equipment Shelter UD7	Close RDA equipment shelter door.	Message remains on monitor. If not, refer to para. 3−3.3.6, Troubleshooting Procedure.
14.	Security Panel UD7A12	Press **RESET** switch on security panel.	Message remains. If not, refer to para. 3−3.3.6, Troubleshooting Procedure.

Table 3−11. Security Alarm Panel Control Circuitry Verification of Operation Check (continued)

Step	Equipment	Action	Indication/Reference
15.	RDA Equipment Shelter UD7	Exit shelter and turn key in security key switch CW and CCW. Re−enter shelter and close door.	`UNAUTHORIZED SITE ENTRY` message disappears from monitor. If not, refer to para. 3−3.3.6, Troubleshooting Procedure.
16.	Generator and TPMS Equipment Shelters UD10 and UD60 and Tower Gate UD11	Perform steps 12 thru 15 but substitute generator shelter door. Proceed to TPMS and repeat sequence on each door. Proceed to Tower Gate and repeat sequence. Secure doors/gate after check sequence.	`UNAUTHORIZED SITE ENTRY` message appears on RDA Maintenance Terminal monitor. If not, refer to para. 3−3.3.6, Troubleshooting Procedure.
17.	Security Panel UD7A12	Pull out **RESET** switch.	`SECURITY SYSTEM NOT RESET` message appears on monitor. If not, refer to para. 3−3.3.6, Troubleshooting Procedure.
18.	Security Panel UD7A12	Press **RESET** switch.	`SECURITY SYSTEM NOT RESET` message disappears on monitor. If not, refer to para. 3−3.3.6, Troubleshooting Procedure.
19.	RDA Equipment Shelter UD7	Secure shelter and turn key in security key switch CW and CCW.	

3−2.12 AIR CONDITIONER EXHAUST AIR TEMPERATURE SENSOR OPERATIONAL CHECK.

The air conditioner exhaust air temperature sensor operational check provides the checks necessary to determine that the exhaust air temperature sensor circuitry functions properly and that the associated monitoring circuitry performs its function. These checks can be performed with the WSR−88D system in full remote operational mode. Refer to Table 3−12. When the air conditioner discharge (exhaust) temperature alarm occurs, the following are true for applicable shelter and air conditioner.

$T_S > TMAX_S$ and $T_A > T_S - T_D$

where:

T_S = Shelter Temperature
T_A = AC Unit Discharge Temperature
$TMAX_S$ = Maximum Equipment Shelter Alarm Temperature (adaptation data)
T_D = Minimum AC Discharge Air Temperature Differential (adaptation data)

Table 3−12. Air Conditioner #1 or #2 Exhaust (Shelter Output) Air Temperature Circuitry Verification of Operation Check

Step	Equipment	Action	Indication/Reference
		NOTE Ensure that applicable power−up procedures in Table 2−1 are completed prior to performing this check. Also, ensure that RDA Group Startup procedures in NWS EHB 6−510, paragraph 6−5.3.2, have been completed.	
1.	AC#1 UD7AC1	Ensure Air Conditioner #1 is OPERATING with thermostat cooling selector set at 70°F.	AC#1 operating. If not, refer to para. 3−3.3.1, Troubleshooting Procedure.
2.	AC#2 UD7AC2	Ensure Air Conditioner #2 is NOT RUNNING with thermostat cooling selector set at 75°F.	AC#2 is OFF.
		NOTE Perform steps 3 and 4 when checking AC#2 exhaust temperature. AC#2 should be operating in mechanical mode for those sites equipped with an AC Economizer.	

Table 3−12. Air Conditioner #1 or #2 Exhaust (Shelter Output) Air Temperature Circuitry Verification of Operation Check (continued)

Step	Equipment	Action	Indication/Reference
3.	AC#1 UD7AC1	Ensure Air Conditioner #1 is NOT RUNNING with thermostat cooling selector set at 75°F.	AC#1 is OFF.
4.	AC#2 UD7AC2	Ensure Air Conditioner #2 is OPERATING with thermostat cooling selector set at 70°F.	AC#2 operating. If not refer to para. 3−3.3.1, Troubleshooting Procedure.
5.	RDA Maintenance Terminal UD5A33	If the Applications menu is not displayed, use mouse and click on Applications screen or press **<Alt>** and **<Tab>** keys simultaneously.	Applications Main menu appears on monitor.
6.	RDA Maintenance Terminal UD5A33	Type **DIPD<Tab>TOW** and press **<Enter>** key.	`Performance Data Tower Utilities Menu#1` appears on monitor. If not, refer to NWS EHB 6−510 Chapter 6.
7.	AC#1 Exhaust Vent	Insert Fahrenheit thermometer into AC #1 exhaust vent for 1 minute. (Figure 1−19, sheet 1).	
8.	AC#1 Exhaust Vent	Remove thermometer from AC#1 exhaust vent and read Fahrenheit temperature. Convert to centigrade temperature using (°F−32°) 5/9 = °C.	
9.	AC#2 Exhaust Vent	Insert Fahrenheit thermometer into AC #2 exhaust vent for 1 minute. (Figure 1−19, sheet 1).	

Table 3−12. Air Conditioner #1 or #2 Exhaust (Shelter Output) Air Temperature Circuitry Verification of Operation Check (continued)

Step	Equipment	Action	Indication/Reference
10.	AC#2 Exhaust Vent	Remove thermometer from AC#2 exhaust vent and read Fahrenheit temperature. Convert to centigrade temperature using (°F−32°) 5/9 = °C.	
11.	RDA Maintenance Terminal UD5A33	Check AC#1 and AC#2 air temperature on Tower Utilities menu.	Reading within 1°C of converted centigrade reading. If not, refer to para. 3−6.2.3, Alignment and Adjustment Procedure.

3−2.13 TRANSMITTER VENT EXHAUST AIR TEMPERATURE SENSOR CIRCUITRY OPERATIONAL CHECK.

The transmitter vent exhaust air temperature sensor operational check provides the checks necessary to determine that the exhaust air temperature sensor functions properly and the associated monitoring circuitry performs its function. These checks can be performed with the WSR−88D system in full remote operational mode. Refer to Table 3−13.

Table 3−13. Transmitter Vent Exhaust Air Temperature Sensor Circuitry Verification of Operation Check

Step	Equipment	Action	Indication/Reference
		NOTE Ensure that applicable power−up procedures in Table 2−1, Table 2−2, and Table 2−4 are completed prior to performing this check. Also, ensure that RDA Group Startup procedures in NWS EHB 6−510, paragraph 6−5.3.2, have been completed.	
1.	RDA Maintenance Terminal UD5A33	If the Applications menu is not displayed, use mouse and click on Applications screen or press **<Alt>** and **<Tab>** keys simultaneously.	Applications Main menu appears on monitor. If not refer to NWS EHB 6−510, Chapter 6.
2.	RDA Maintenance Terminal UD5A33	Type **DIPD<Tab>TOW** and press **<Enter>** key.	`Performance Data Tower Utilities Menu #1` appears on monitor. If not, refer to NWS EHB 6−510, Chapter 6.
3.	Transmitter Exhaust Vent	Insert Fahrenheit thermometer into transmitter exhaust vent for 1 minute.	
4.	Transmitter Exhaust Vent	Remove thermometer from exhaust vent and read Fahrenheit temperature. Convert to centigrade temperature using (°F−32°) 5/9 = °C.	

Table 3−13. Transmitter Vent Exhaust Air Temperature Sensor Circuitry Verification of Operation Check (continued)

Step	Equipment	Action	Indication/Reference
5.	RDA Maintenance Terminal UD5A33	Check XMTR air temperature reading on Tower Utilities menu.	Reading within 1°C of converted centigrade reading. If not, refer to para. 3−3.3.3 Troubleshooting Procedure.

3−2.14 CLOGGED FILTER INDICATOR CIRCUITRY OPERATIONAL CHECK.

The clogged filter indicator operational check provides the checks necessary to determine that the clogged filter indicator functions properly and that the associated monitoring circuitry performs its functions. These checks can be accomplished with the WSR−88D system in full remote operational mode. Refer to Table 3−14.

Table 3−14. Clogged Filter Indicator Circuitry of Operation Check

Step	Equipment	Action	Indication/Reference
		NOTE Ensure that applicable power−up procedures in Table 2−1, Table 2−2, and Table 2−4 are completed prior to performing this check.	
1.	RDA Maintenance Terminal UD5A33	If the Applications menu is not displayed, use mouse and click on Applications screen or press **<Alt>** and **<Tab>** keys simultaneously.	Applications Main menu appears on monitor. If not, refer to NWS EHB 6−510, Chapter 6.
2.	RDA Maintenance Terminal UD5A33	Type **DIPD<Tab>TOW** and press **<Enter>** key.	`Performance Data Tower Utilities Menu #1` appears on monitor. If not, refer to NWS EHB 6−510, Chapter 6.
3.	RDA Maintenance Terminal UD5A33	Check the following for OK readings: AC#1 filter AC#2 filter	 `OK` `OK` If dirty, refer to para 3−5.6.8, Removal and Replacement Procedure.
4.	RDA Maintenance Terminal UD5A33	Type **DIPD<Tab>XMTR** and press **<Enter>** key.	`Performance Data XMTR Menu #1` appears. If not, refer to NWS EHB 6−510, Chapter 6.
5.	RDA Maintenance Terminal UD5A33	Check XMTR air filter reading.	`OK`; if not (dirty), refer to para. 3−5.6.9, Removal and Replacement Procedure.

3−2.15 EXTERIOR AIR TEMPERATURE SENSOR CIRCUITRY OPERATIONAL CHECK.

The exterior air temperature sensor operational check provides the checks necessary to determine that the sensor is functioning properly and that the associated monitoring circuitry performs its function. These checks can be performed with the WSR−88D system in full remote operational mode. Refer to Table 3−15.

Table 3−15. Exterior Air Temperature Sensor Circuitry Verification of Operation Check

Step	Equipment	Action	Indication/Reference
		NOTE Ensure that applicable power−up procedures in Table 2−1 and Table 2−4 are completed prior to performing this check. Also, ensure that RDA Group Startup procedures in NWS EHB 6−510, paragraph 6−5.3.2, have been completed. This procedure requires a portable thermometer.	
1.	RDA Maintenance Terminal UD5A33	If the Applications menu is not displayed, use mouse and click on Applications screen or press **<Alt>** and **<Tab>** keys simultaneously.	Applications Main menu appears on monitor. If not, refer to NWS EHB 6−510, Chapter 6.
2.	RDA Maintenance Terminal UD5A33	Type **DIPD<Tab>TOW** and press **<Enter>** key.	`Performance Data Tower Utilities Menu #1` is displayed on monitor.
3.	RDA Maintenance Terminal UD5A33	Check and record outside temperature reading.	Degrees Celsius displayed on menu #1. If not, refer to para. 3−5.6.13, Removal and Replacement Procedure.
4.	Fahrenheit Thermometer	Check outside air temperature using thermometer. Convert Fahrenheit temperature to centigrade using (°F−32°) 5/9 = °C.	

Table 3−15. Exterior Air Temperature Sensor Circuitry Verification of Operation Check (continued)

Step	Equipment	Action	Indication/Reference
5.	Fahrenheit Thermometer	Compare outside temperature reading in step 3 with temperature reading in step 4.	Temperature readings within 1°C. If not, refer to para. 3−6.2.3, Alignment and Adjustment Procedure.

3−2.16 INTERIOR AIR TEMPERATURE SENSOR CIRCUITRY OPERATIONAL CHECK.

The interior air temperature sensor operational check provides the checks necessary to determine that the interior air temperature sensor and its associated monitoring circuitry are performing the required functions correctly. These checks can be performed with the WSR−88D system in full remote operation mode. Refer to Table 3−16.

Table 3−16. Interior Air Temperature Sensor Circuitry Verification of Operation Check

Step	Equipment	Action	Indication/Reference
		NOTE Ensure that applicable power−up procedures in Table 2−1 are completed prior to performing this check. Also, ensure that RDA Group Startup procedures in NWS EHB 6−510, paragraph 6−5.3.2, have been completed.	
1.	RDA Maintenance Terminal UD5A33	If the Applications menu is not displayed, use mouse and click on Applications screen or press **<Alt>** and **<Tab>** keys simultaneously.	Applications Main Menu appears on monitor. If not, refer to NWS EHB 6−510, Chapter 6.
2.	RDA Maintenance Terminal UD5A33	Type **DIPD<Tab>TOW** and press **<Enter>** key.	`Performance Data Tower Utilities Menu #1` is displayed on monitor. If not, refer to NWS EHB 6−510, Chapter 6.
3.	RDA Maintenance Terminal UD5A33	Check and record EQUIP SH TEMP on Menu #1.	Degree Celsius displayed. If not refer to para. 3−5.6.12, Removal and Replacement Procedure.
		NOTE In step 4, use AC#2 thermostat UD7S4 in place of UD7S3 for AC#2 equipped with economizer.	
4.	AC#1 Thermostat UD7S3	Observe AC#1 thermostat (Fahrenheit) and convert to centigrade using (°F–32°) 5/9 = °C.	

Table 3−16. Interior Air Temperature Sensor Circuitry Verification of Operation Check (continued)

Step	Equipment	Action	Indication/Reference
5.		Compare EQUIP SH TEMP reading in step 3 with °C in step 4.	Temperature readings within 1°C. If not, refer to para. 3−6.2.3 Alignment and Adjustment Procedure.

3−2.17 GENERATOR SHELTER AIR TEMPERATURE SENSOR CIRCUITRY OPERATIONAL CHECK.

The generator shelter air temperature sensor operational check provides the checks necessary to determine that air temperature sensing circuitry are performing the required functions correctly. These checks can be accomplished with the WSR−88D system in full remote operational mode. Refer to Table 3−17.

Table 3−17. Generator Shelter Air Temperature Sensor Circuitry Verification of Operation Check

Step	Equipment	Action	Indication/Reference
		NOTE Ensure that applicable power−up procedures in Table 2−1 and Table 2−4 are completed prior to performing this check. Also, ensure that RDA Group Startup procedures in NWS EHB 6−510, paragraph 6−5.3.2, have been completed. This procedure requires a portable thermometer.	
1.	RDA Maintenance Terminal UD5A33	If the Applications menu is not displayed, use mouse and click on Applications screen or press **<Alt>** and **<Tab>** keys simultaneously.	Applications main menu appears on monitor. If not, refer to NWS EHB 6−510, Chapter 6.
2.	RDA Maintenance Terminal UD5A33	Type **DIPD<Tab>TOW** and press **<Enter>** key.	`Performance Data Tower Utilities Menu #1` displayed on monitor. If not, refer to NWS EHB 6−510, Chapter 6.
3.	RDA Maintenance Terminal UD5A33	Check and record GEN SHLTR TEMP on Menu #1.	Degree Celsius displayed. If not, refer to para. 3−5.6.12, Removal and Replacement Procedure.
4.	Fahrenheit Thermometer	Check generator shelter inside air temperature using thermometer. Convert Fahrenheit temperature to centigrade using (°F−32°) 5/9 = °C.	

Table 3−17. Generator Shelter Air Temperature Sensor Circuitry Verification of Operation Check (continued)

Step	Equipment	Action	Indication/Reference
5.		Compare GEN SHLTR TEMP recorded in step 3 with converted temperature reading of step 4.	Temperature readings within 1°C. If not, refer to para. 3−6.2.3, Alignment and Adjustment Procedure.

3−2.18 RADOME AIR TEMPERATURE SENSOR CIRCUITRY OPERATIONAL CHECK.

The Radome air temperature sensor operational check provides the checks necessary to determine that the Radome air sensor functions properly and the associated monitoring circuitry performs its function. These checks require the WSR−88D system to be in the local standby mode with the transmitter circuit breaker OFF. Refer to Table 3−18.

Table 3−18. Radome Air Temperature Sensor Circuitry Verification of Operation Check

Step	Equipment	Action	Indication/Reference
		NOTE	
		Ensure that applicable power−up procedures in Table 2−1 and Table 2−4 are completed prior to performing this check. Also, ensure that RDA Group Startup procedures in NWS EHB 6−510, paragraph 6−5.3.2, have been completed.	
		This procedure requires a portable thermometer.	
1.	RDA Maintenance Terminal UD5A33	If the Applications menu is not displayed, use mouse and click on Applications screen or press **<Alt>** and **<Tab>** keys simultaneously.	Applications main menu appears on monitor. If not, refer to NWS EHB 6−510, Chapter 6.
2.	RDA Maintenance Terminal UD5A33	Type **DIPD<Tab>TOW** and press **<Enter>** key.	`Performance Data Tower Utilities Menu #1` appears on monitor. If not, refer to NWS EHB 6−510, Chapter 6.
3.	RDA Maintenance Terminal UD5A33	Check and record RADOME AIR TEMP reading on Menu #1.	Degree Celsius displayed. If not; refer to para. 3−5.6.12, Removal and Replacement Procedure.
		WARNING	
		Perform transmitter and pedestal shutdown per NWS EHB 6−510, paragraph 6−5.3.1 prior to performing the following steps to prevent RF radiation hazard and serious injury or **DEATH**.	

Table 3−18. Radome Air Temperature Sensor Circuitry Verification of Operation Check (continued)

Step	Equipment	Action	Indication/Reference
4.	Fahrenheit Thermometer	Check radome air temperature using thermometer. Convert Fahrenheit temperature to centigrade using (°F−32°) 5/9 = °C.	
5.		Compare RADOME AIR TEMP recorded in step 3 with converted temperature reading of step 4.	Temperature readings within 1°C. If not, refer to para. 3−6.2.3, Alignment and Adjustment Procedure.

3−2.19 AIRCRAFT WARNING LIGHT CONTROL CIRCUITRY OPERATIONAL CHECK.

The aircraft warning light operational check provides the checks necessary to determine that the aircraft warning light circuitry monitoring circuitry functions properly. These checks can be performed with the WSR−88D system in full remote operational mode. Refer to Table 3−19.

Table 3−19. Aircraft Warning Lights Control Circuitry Verification of Operation Check

Step	Equipment	Action	Indication/Reference
		NOTE Ensure that applicable power−up procedures in Table 2−1 and Table 2−4 are completed prior to performing this check. Also, ensure that RDA Group Startup procedures in NWS EHB 6−510, paragraph 6−5.3.2, have been completed. The WSR−88D system can be in full remote operational mode to perform the aircraft warning light operational check.	
1.	Aircraft Warning Lights	Check aircraft warning lights.	Both lights are illuminated.
2.	RDA Maintenance Terminal UD5A33	If the Applications menu is not displayed, use mouse and click on Applications screen or press **<Alt>** and **<Tab>** keys simultaneously.	Applications main menu displayed on monitor. If not, refer to NWS EHB 6−510, Chapter 6.
3.	RDA Maintenance Terminal UD5A33	Type **DIPD<Tab>TOW** and press **<Enter>** key.	`Performance Data Tower Utilities Menu #1` is displayed.
4.	RDA Maintenance Terminal UD5A33	Check AIRCRAFT LIGHTING.	`OK`. If not, refer to para. 3−5.6.64, Removal and Replacement Procedure, and Figure 3−1, Sheet 2.

3−2.20 TPMS ENVIRONMENTAL CONTROL UNIT OPERATIONAL CHECK.

The environmental control unit operational check provides the checks necessary to determine that the air conditioning and heating unit functions properly. Refer to Table 3−20.

Table 3−20. TPMS Environmental Control Unit Operational Check

Step	Equipment	Action	Indication/Reference
		NOTES	
		Ensure that applicable power−up procedures in Table 2−1 are completed prior to performing this check.	
		Refer to Figure 2−1 for Environmental Control Unit controls and indicators.	
		AIR CONDITIONING CHECKOUT	
1.	Thermostat UD60A14	Set the cooling temperature selection lever on the wall thermostat to a point higher than the ambient temperature. Set the heating temperature selection lever to a temperature that is lower than ambient.	Type 4 shelters have two ECU's with a Lead−Lag Thermostat to control both ECUs.
2.	Thermostat UD60A14	Set the thermostat SYSTEM switch in the AUTO position.	Nothing should operate at this time.
3.	Thermostat UD60A14	Slowly lower the thermostat's cooling temperature level until the indoor fan starts. Once the indoor fan is on, allow approximately three minutes for the compressor to start. Note that the outdoor condenser fan may not come on immediately because it is cycled by refrigerant temperature.	Compressor should start immediately but may be delayed for up to three minutes depending on operating conditions. If not, refer to paragraph 3−3.3.7, Troubleshooting Procedure.

Table 3−20. TPMS Environmental Control Unit Operational Check (continued)

Step	Equipment	Action	Indication/Reference
		AIR CONDITIONING CHECKOUT − Cont.	
		NOTES	
		On ComPac II units, in order to check the system under different ambient conditions, the air temperature and enthalpy sensors must be “tricked”. When outdoor ambient conditions are higher than the control setting, a component aerosol may be sprayed directly onto the enthalpy sensor to simulate low enthalpy conditions causing the economizer damper to open.	
		Alternately, when outdoor conditions are lower than the setpoint, a source of heat such as a hair dryer can be directed on the air temperature sensor to simulate warmer conditions which will bring on mechanical cooling and start the compressor.	
4.	Thermostat UD60A14	To stop cooling, slowly raise the thermostat−cooling lever to a temperature higher than ambient.	Compressor should stop and fan will stop after cooling off the coils.
		HEATING CHECKOUT (EXCEPT TYPE 4 ECU #1)	
1.	Thermostat UD60A14	Raise the heating temperature selection lever to a setting that is higher than the ambient temperature.	The fan and electric heat should immediately cycle on.
2.	Thermostat UD60A14	Move the SYSTEM switch to the **OFF** position.	All functions should stop.

Table 3−20. TPMS Environmental Control Unit Operational Check (continued)

Step	Equipment	Action	Indication/Reference
		HEATING CHECKOUT (EXCEPT TYPE 4 ECU #1) − Cont.	
3.	Thermostat UD60A14	The damper located in the outside unit should remain closed during the heating cycle. The minimum position potentiometer also located in the outside unit should be set at the "mid" position. The economizer controller should be set at the "D" position (58°F @ 50% relative humidity).	Heater operates. If not, refer to para 3−3.3.7, Troubleshooting Procedure.

3−2.21 TPMS ELECTRIC TOILET OPERATIONAL CHECK.

The electric toilet operational check provides the checks necessary to determine that the electric toilet and its associated circuitry are functioning properly. Refer to Table 3−21.

Table 3−21. TPMS Electric Toilet Operational Check

Step	Equipment	Action	Indication/Reference
		NOTE Ensure that applicable power−up procedures in Table 2−1 are completed prior to performing this check.	
1.	Electric Toilet UD60A4	Insert small amount of organic material and 1 cup of water into bowl liner. Close lid.	
2.		Press **START**	Observe incineration begins (blower starts to operate about 45 seconds after start and warm air will be discharged from vent pipe about 20−30 minutes after start). If not, refer to para. 3−3.3.8, Troubleshooting Procedure.
3.	Ash Pan	At end of incineration, check ash pan after pan has cooled to verify material and liner were incinerated.	If liner and organic material have not been completely incinerated, refer to para 3−3.3.8, Troubleshooting Procedure.

3−2.22 TPS UNIT OPERATIONAL CHECK.

The Transition Power Source (TPS) operational check provides the checks necessary to determine that the TPS and its associated circuitry are functioning properly in the normal on−line operational mode. Refer to Table 3−22.

Table 3−22. TPS Operational Check

Step	Equipment	Action	Indication/Reference
		NOTES	
		Ensure that applicable power−up procedures in Table 2−9 are completed prior to performing this check.	
		Refer to Figure 2−8 and NWS EHB 6−554−5, Chapter 4, for location of TPS Control and Indicators and detail system operation.	
1.	Control Panel UD62A6	Ensure the following circuit breaker and switches are in the proper position: CB1 to ON PUSH TO RESET pressed in MODE to NORMAL BATTERY to NORMAL	Green sine−wave symbol on Monitor Panel is lit.
2.	Monitor Panel UD62A5	Ensure only the green sine−wave symbol is lit. Any other symbol lit indicates abnormal operation or a Notice or Alarm condition.	Indicates normal operation.
3,	Monitor Panel UD62A5	Use the left and right arrow keys to move the cursor on the menu bar to **Meters**. Use the up and down arrow keys to move the options cursor to **System**.	Verify the Input, Output, Bypass, and Battery area display voltages and frequency as follows: Input/Bypass VAC/Freq: 208 Vac ± 1%/60Hz ± .005 Battery Approx. 540 Vdc ± 10V
4.	Monitor Panel UD62A5	Use the down arrow key to select **Load Amps** option in the **Meters** menu.	Ensure the load amps are balanced across all three phases.

Table 3−22. TPS Operational Check (continued)

Step	Equipment	Action	Indication/Reference
5.	Monitor Panel UD62A5	Use the right arrow key to move the cursor on the menu bar to **Events**. Use the up and down arrow keys to move the options cursor to **History**. Press the Return key to move cursor to Log window. Use up and down arrow keys to scroll. Press Return key to return to the **Events** menu.	Review the History log for abnormal conditions and trends. Log records up to 400 system events.
		Use the down arrow key to select **Active**.	Review any current active events.
6.	Monitor Panel UD62A5	Use the right arrow key to move the cursor on the menu bar to **Graphics**. The **Mimic** option will be selected.	The real−time graphic display should show normal current flow through the internal TPS components as highlighted (double lined).
7.	Monitor Panel UD62A5	Use the right arrow key to move the cursor on the menu bar to **Setup**. Use the up and down arrow keys to move the options cursor to **Time**. Press the return key to select the area to change.	Verify the data and time are correct.
8.	Monitor Panel UD62A5	Press and hold the left and right arrow keys for approximately 5 seconds.	Verify all symbol LEDs illuminate.

3−2.23 HYDROGEN DETECTOR OPERATIONAL CHECK

The Hydrogen Detector operational check provides the checks necessary to determine that the detector and its associated circuitry are functioning properly to properly shutdown the TPS unit and open the economizer louvers in the TPMS ECU. Refer to Table 3−23.

Table 3−23. Hydrogen Detector Operational Check

Step	Equipment	Action	Indication/Reference
		NOTES	
		Ensure that applicable power−up procedures in Table 2−9 are completed prior to performing this check.	
		This procedure requires two technicians.	
1.	Hydrogen Detector UD60A10	Ensure power is applied to hydrogen detector and is functioning normally.	Only green LED is lit.
		NOTE	
		The environmental control unit (ECU) economizer louver will open when the hydrogen detector detects 1% hydrogen. The ECU access panels must be removed to view louver in motion.	
2.	ECU UD60A11/12/15/16	Remove the ECU access panels.	Economizer is visible.
		NOTE	
		Pressing the “Press 10 Seconds to Test” button on the hydrogen detector for longer than 10 seconds will sound an alarm and the TPS will shutdown to the Bypass mode.	
3.	Hydrogen Detector UD60A10	a. Press the “Push 10 Seconds to Test” button while a second technician observes the louver in the ECU.	The 1% yellow (LED) will light and the louver will start to open.
		b. Continue pressing the Test button.	The 2% (red) LED will light and start blinking, the alarm will sound, and the TPS will go to Bypass.
		c. Release the Test button.	The alarm will stop and the red and yellow lights will extinguish. The ECU louver will close.

Table 3−23. Hydrogen Detector Operational Check

Step	Equipment	Action	Indication/Reference
4.	TPS Control Panel UD62A6	Turn the START key switch to the right momentarily (about 1 second) and release.	The TPS will startup and auto transfer back on−line in approximately 20−30 seconds.
5.	Monitor Panel UD62A5	Observe and verify only the green sine−wave symbol is lit.	Indicates normal. Any other symbol lit indicates an alarm or notice condition.
6.	ECU UD60A11/12/15/16	Install access panel that were removed.	

SECTION 3−3. TROUBLESHOOTING PROCEDURES

3−3.1 INTRODUCTION.

This section provides the instructions and procedures required to detect malfunctions and isolate faults to the RPIE LRUs. The primary mode of fault isolation uses system alarm and status messages presented at the RDA Maintenance Terminal. The secondary mode of fault isolation uses the Performance Data Tower Utilities Menu #1 and Menu #2 to verify RPIE Subsystem or LRU failures.

For Powerware 9315−50 TPS troubleshooting procedures, refer to NWS EHB 6−554−5. ▌

3−3.2 RPIE FAULT ISOLATION.

3−3.2.1 Primary Fault Isolation Flowcharts.

Figure 3−1 and Figure 3−2 constitute the primary fault isolation flowcharts. They are designed to isolate faults within the Tower/Utilities (i.e., RPIE) functional area to an LRU or small group of LRUs. In cases where more than one LRU is involved in the fault group, the flowcharts will reference secondary fault isolation procedures (refer to paragraph 3−3.2.2.) Specific maintenance procedures contained in paragraph 3−3.3 are also referenced.

3−3.2.2 Flowchart Symbol Convention.

All circled letters on the flowcharts indicate a reference to another part of the flowchart. All boxed numbers are references to secondary fault isolation procedures. Examples are illustrated below:

(A) Reference to another part of flowchart.

[TU1] Reference to secondary fault isolation procedure.

In addition, the flowcharts are arranged so that all actions that must be performed are in boxes and all questions are in diamonds.

3−3.2.3 Secondary Fault Isolation Procedures.

This section contains the required secondary fault isolation procedures.

3−3.2.3.1 Equipment and Tools Required

1. Multimeter, digital

3−3.2.3.2 TU1.

This fault group consists of the input three−phase prime power and the air conditioner.

WARNING

Lethal voltages exist from 120/208 Vac 3−phase commercial power and can cause serious injury or **DEATH**. Observe standard safety precautions when working around or measuring these hazardous voltages.

1. Remove bottom access panel (AC model WA60) or open circuit breaker/disconnect access panel (AC model WA601).

2. Check circuit breaker CB1 status:

   a. If CB1 is tripped out, proceed to step 3.

   b. If CB1 is not tripped out, proceed to step 4.

3. Reset circuit breaker CB1:

   a. If air conditioner starts and runs, close access panel and resume normal operations.

   b. If CB1 trips out again, either CB1 or the air conditioner is faulty. Proceed to step 4.

4. Locate the input power cable black, red, and blue wire leads to circuit breaker CB1. Using a digital multimeter, measure the AC voltage between the black and red, black and blue, and blue and red wires. The voltages should be 208 ± 20 Vac.

   a. If voltages are correct, the air conditioner is defective. Call in a trained air conditioner technician.

   b. If voltages are incorrect, or absent, check AC input from Main Power Distribution Panel UD7A2 and circuit breakers CB2, 4, and 6 (AC#1) or CB12, 14, and 16 (AC#2).

      (1) If input from Main Power Distribution Panel is correct, then CB1 is faulty. Replace CB1 using standard shop practice.

      (2) If input from Main Power Distribution Panel is incorrect or absent, then either circuit breakers CB2, 4, 6, 12, 14, or 16 is faulty.

      (3) Locate the input power cable black, red, and blue wire leads to these circuit breakers. Using a digital multimeter, measure the AC voltage between the black and red, black and blue, and blue and red wires. The voltage should be 208 ± 20 Vac; if not, then replace the faulty circuit breaker per paragraph 3−5.6.1.

3−3.2.3.3 TU2.

This fault group consists of:

- For Onan Generators, the Battery Charger UD10A1A6−1 and the Battery UD10M1BT1, BT2.
- For Kohler Generators, the Battery Charger UD10A1A6 and the Battery UD10M1BT1.

1. Onan Generators:

   a. Using a digital multimeter, measure the DC voltage across the series combination of the two batteries. The voltage should be 26.8 ± 4 Vdc. If the voltage is not 26.8 ± 4 Vdc, replace the Battery Charger UD10A1A6−1; otherwise proceed to step b.

   b. Open the door of the Auto−Transfer Switch Assembly UD10A1.

**** ESD ** <u>CAUTION</u> ** ESD ****

All WSR−88D printed circuit cards are electrostatic sensitive devices which require special handling.

   c. Put ESD wristband on and attach alligator clips to cabinet chassis.

   d. Locate Battery Charger UD10A1A6−1 and remove the fuses from the Battery Charger.

   e. Using a digital multimeter, measure the DC voltage across each individual battery. The voltage should be 13.4 ± 2 Vdc. Replace the batteries that do not have a voltage of 13.4 ± 2 Vdc.

   f. Replace the fuses in Battery Charger UD10A1A6−1. Close the door of the Auto−Transfer Switch Assembly UD10A1.

2. Kohler Generators:

   a. Using a digital multimeter, measure the DC voltage across the battery. The voltage should be 13.4 ± 2 Vdc. If the voltage is not 13.4 ± 2 Vdc, replace the Battery Charger UD10A1A6; otherwise proceed to step b.

   b. Open the door of the Auto−Transfer Switch Assembly UD10A1.

**** ESD ** <u>CAUTION</u> ** ESD ****

All WSR−88D printed circuit cards are electrostatic sensitive devices which require special handling.

   c. Put ESD wristband on and attach alligator clips to cabinet chassis.

   d. Locate Battery Charger UD10A1A6 and remove the fuse from the Battery Charger.

   e. Using a digital multimeter, measure the DC voltage across battery. The voltage should be 13.4 ± 2 Vdc. Replace battery if it does not have a voltage of 13.4 ± 2 Vdc.

f. Replace fuse in Battery Charger UD10A1A6. Close the door of the Auto−Transfer Switch Assembly UD10A1.

3−3.2.3.4 TU3.

This fault group consists of the Security Control Panel UD7A12, and Digital Analog Unit (DAU) Digital Board UD5A3A1.

1. Remove cable W30 from UD5J6. Using a digital multimeter, measure the resistance between pins 4 and 30 on cable W30.

   a. If the resistance is greater than 1 megohm, replace Digital Board UD5A3A1.

   b. If the resistance is less than 1 megohm, replace Security Panel UD7A12.

3−3.2.3.5 TU4.

This fault group consists of the Radome personnel hatch interlock switch(s) and its wiring.

NOTE

Two technicians are required for this procedure.

1. At Alarm Termination Panel UD7A1, disconnect and tag the input cable leads from terminals TB2−25, 26, 27, and 28.

2. One technician should activate/deactivate the personnel hatch interlock switch manually while the second technician measures the resistance between interlock switch contact leads.

Switch Contacts	Cable Leads	Plunger Released Resistance Hatch Open	Plunger Depressed Resistance Hatch Closed
N.O.	27/28	zero/small	infinity
N.C.	25/26	infinity	zero/small

   a. If manually activated plunger resistance measurements are not as indicated, troubleshoot switch and wiring.

   b. If manually activated plunger resistance measurements are as indicated, close hatch and repeat resistance measurements.

      (1) If measurements are as indicated, troubleshoot wiring from UD7A1TB2 to DAU UD5A3.

      (2) If measurements are not as indicated, readjust hatch interlock switch plunger so that it is fully depressed by closed hatch per paragraph 3−6.8.

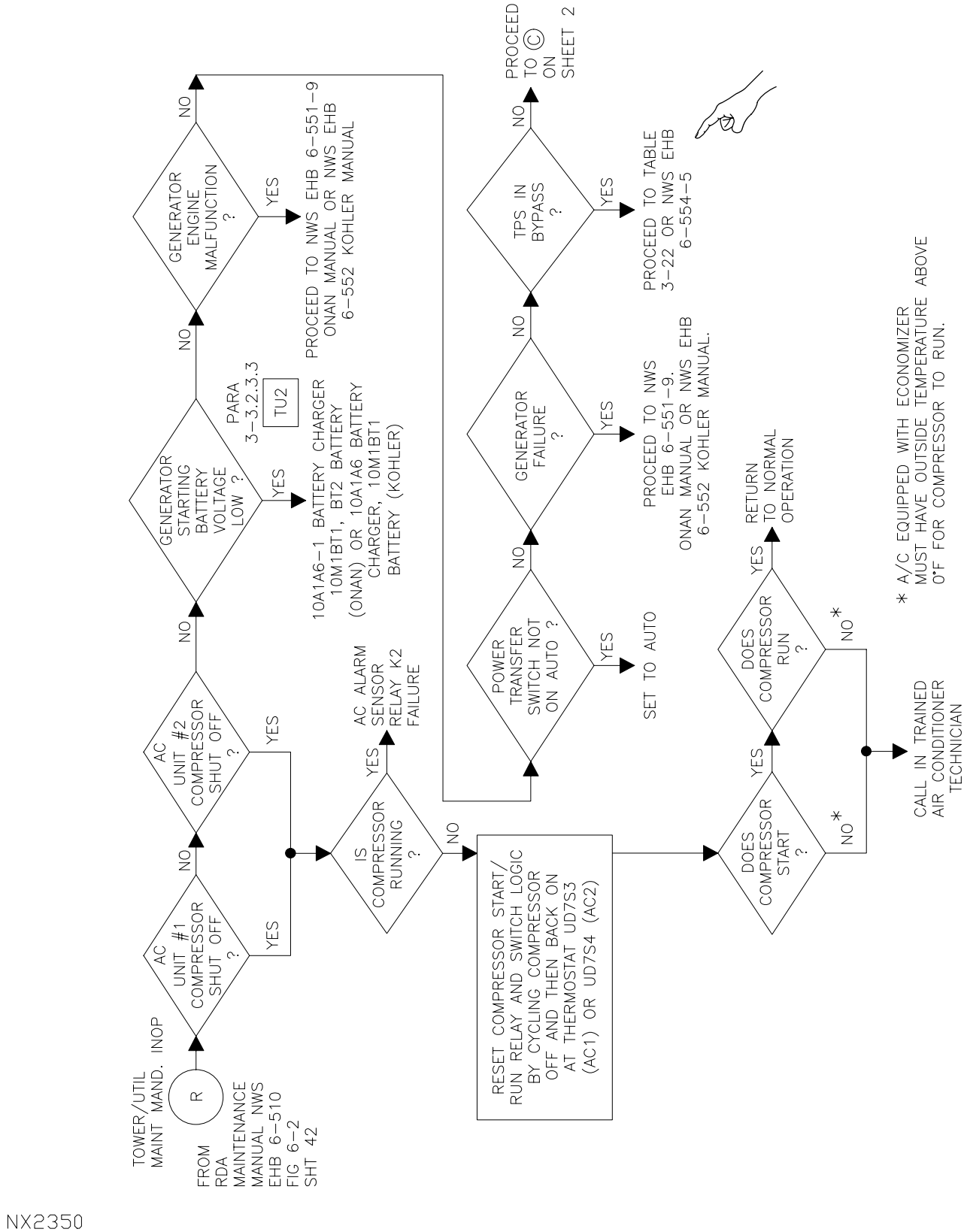

Figure 3−1. RPIE Fault Isolation Flowchart (Maint Mand) Tower Utilities (Sheet 1 of 4)

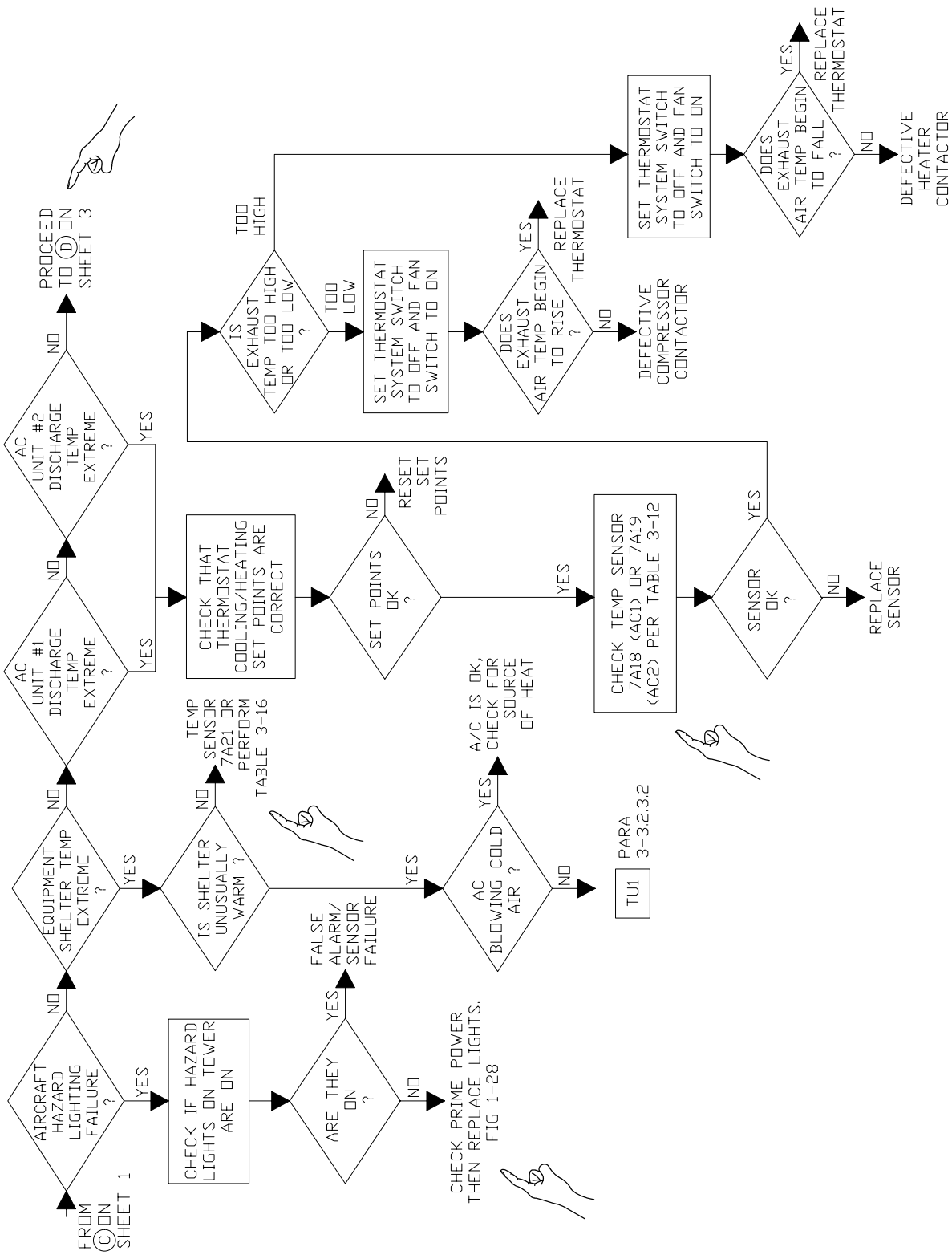

NX2351

Figure 3−1. RPIE Fault Isolation Flowchart (Maint Mand) Tower Utilities (Sheet 2 of 4)

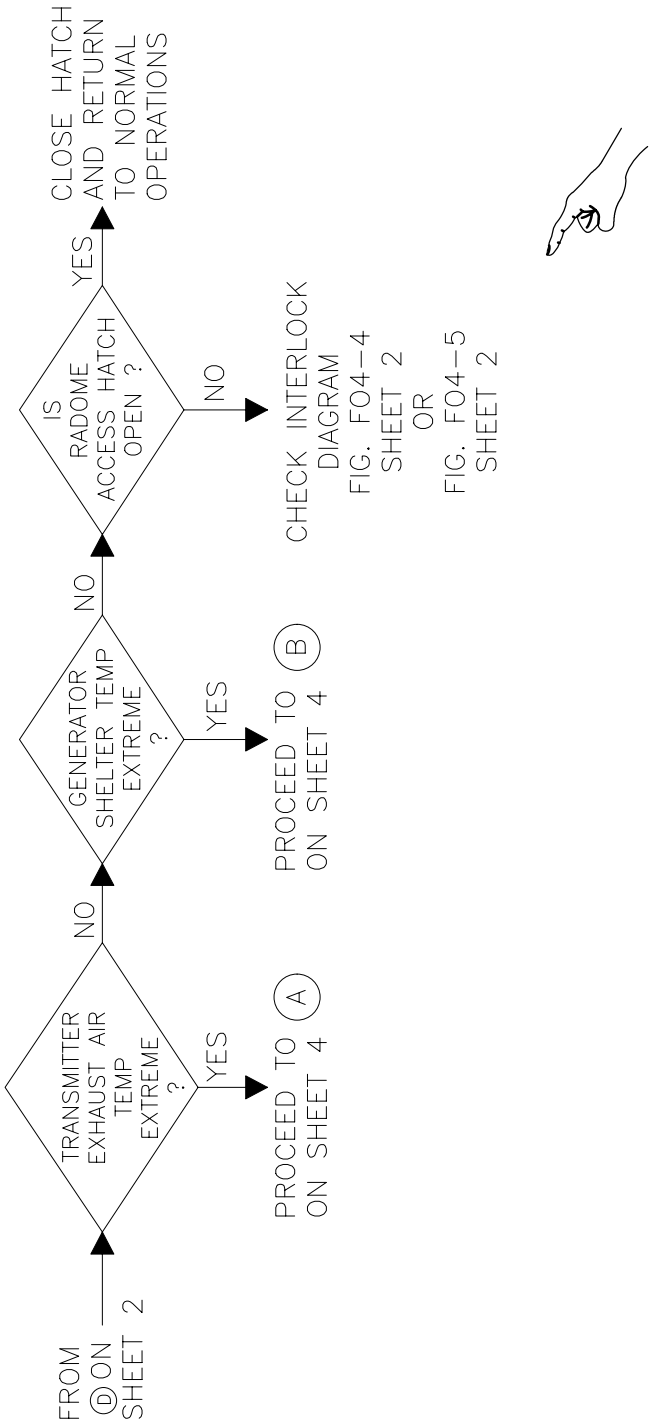

NX2352

Figure 3−1. RPIE Fault Isolation Flowchart (Maint Mand) Tower Utilities (Sheet 3 of 4)

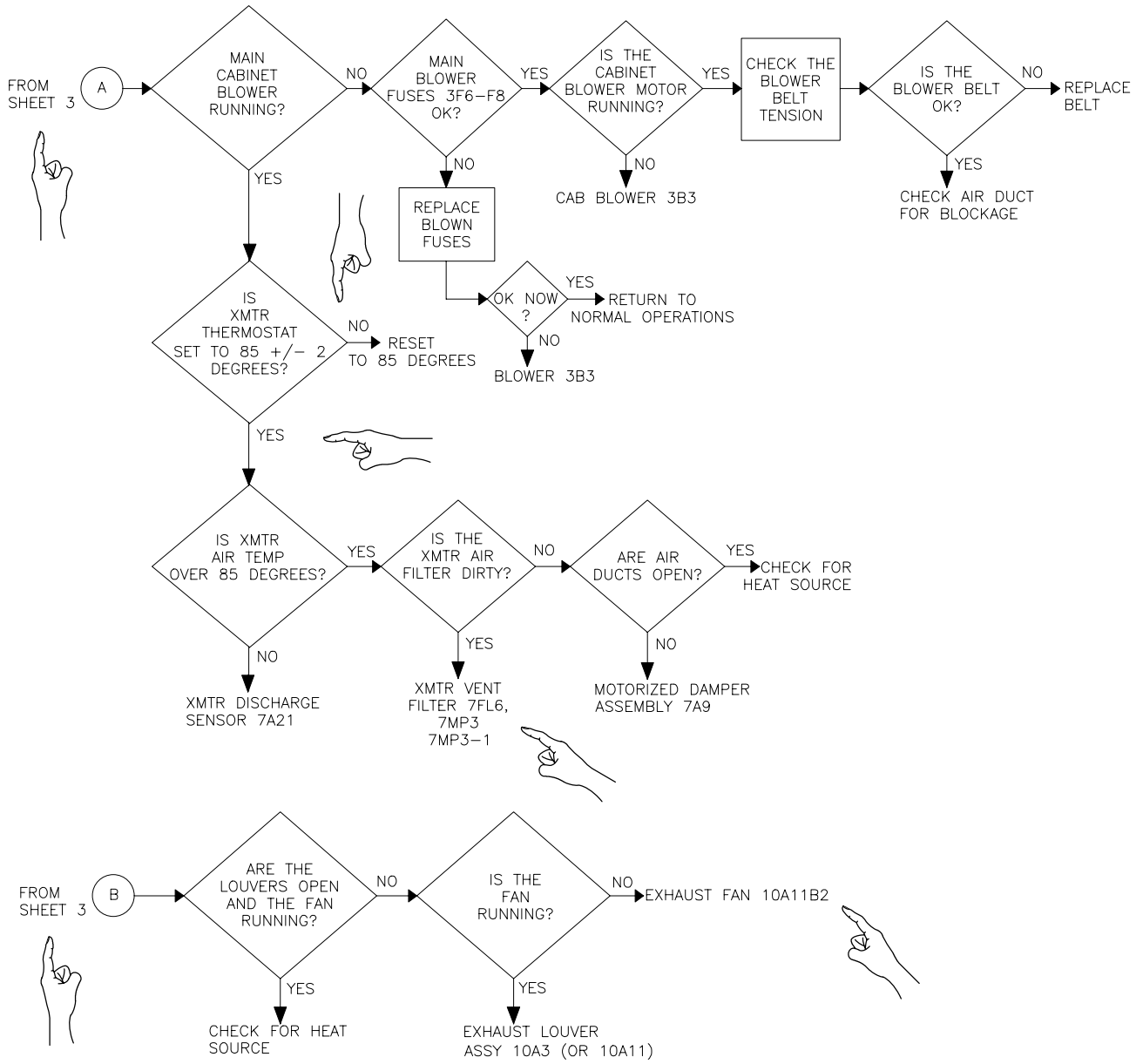

Figure 3−1. RPIE Fault Isolation Flowchart (Maint Mand) Tower Utilities (Sheet 4 of 4)

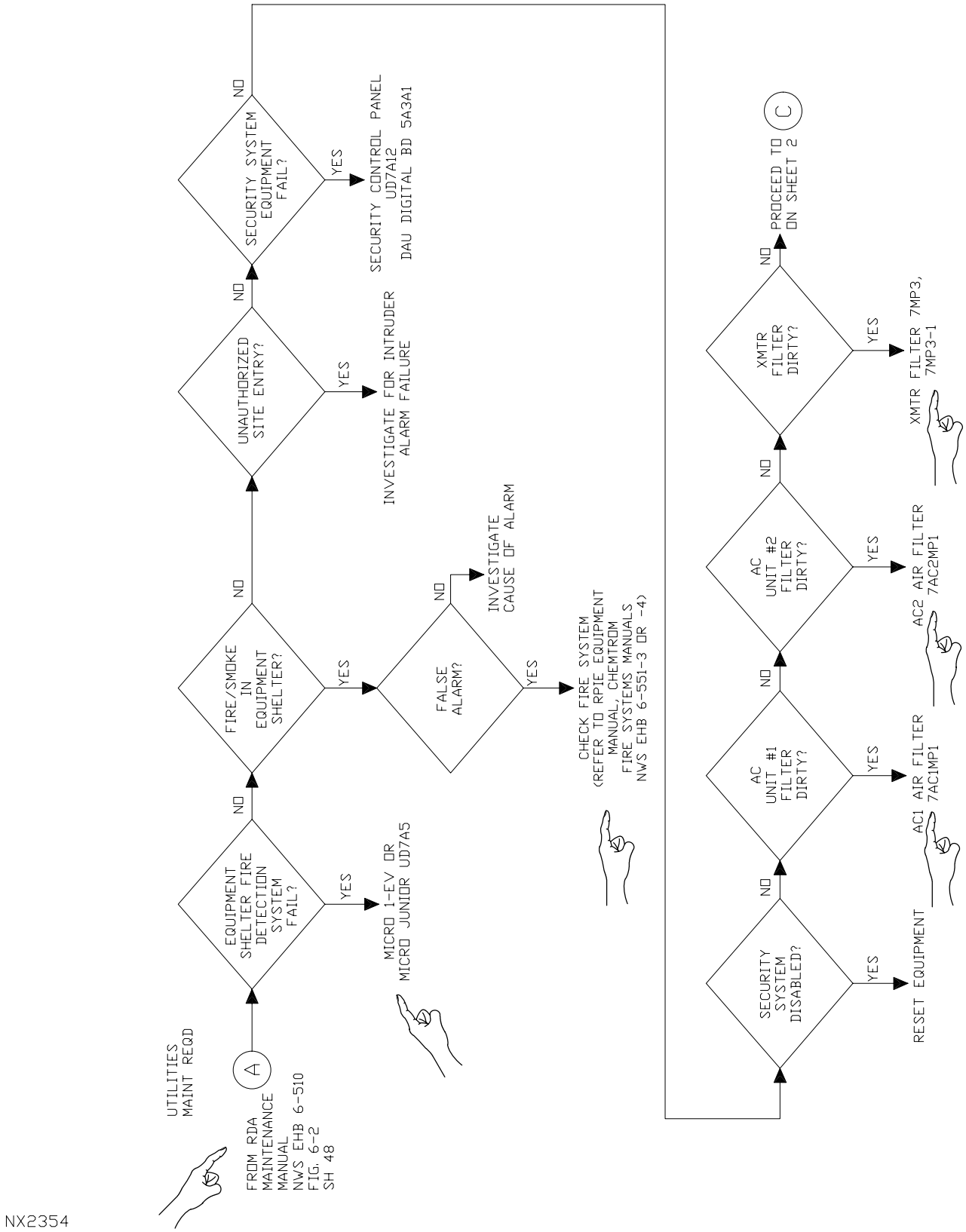

Figure 3−2. RPIE Fault Isolation Flowchart (Maint Req'd) Tower Utilities (Sheet 1 of 5)

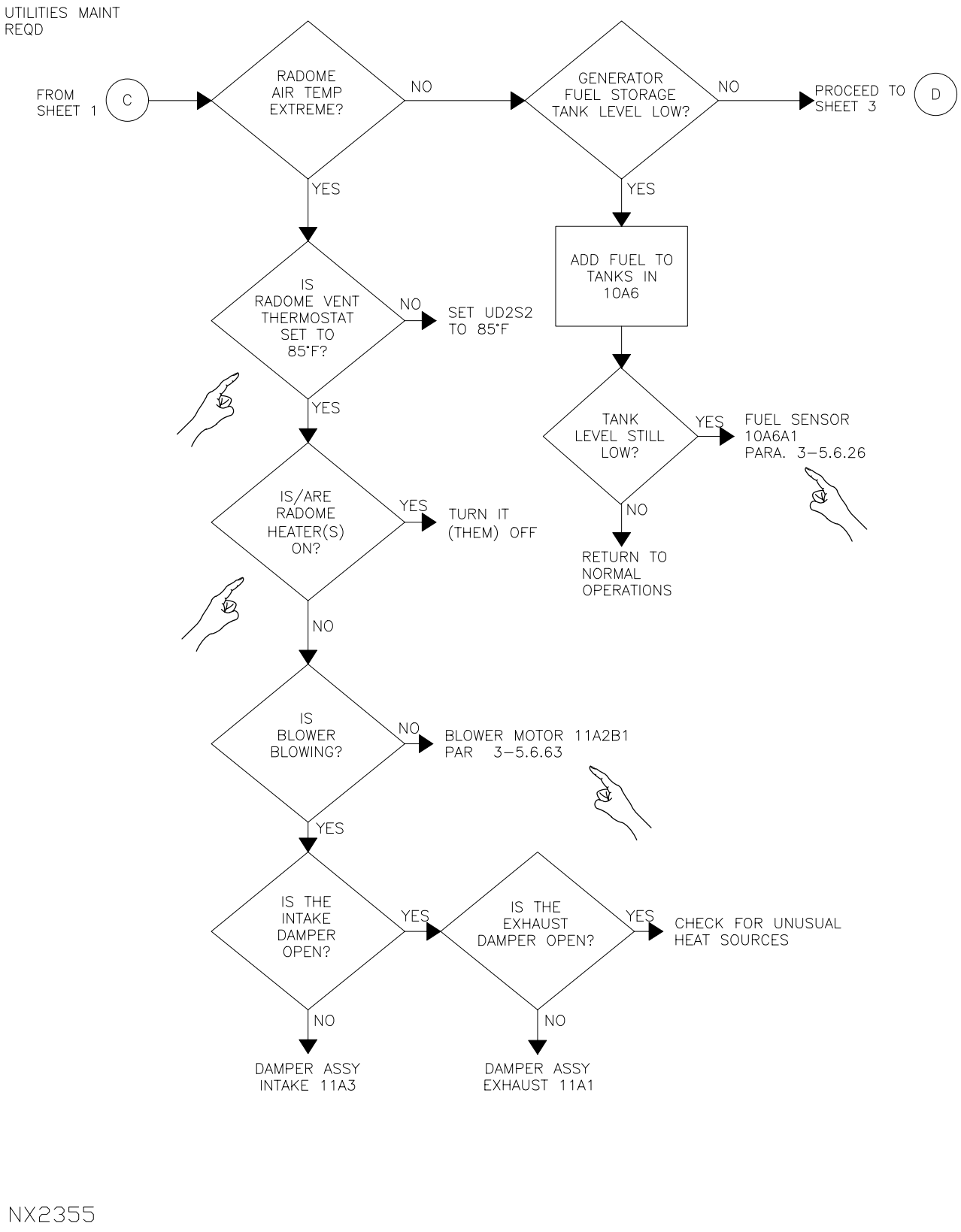

Figure 3−2. RPIE Fault Isolation Flowchart (Maint Req'd) Tower Utilities (Sheet 2 of 5)

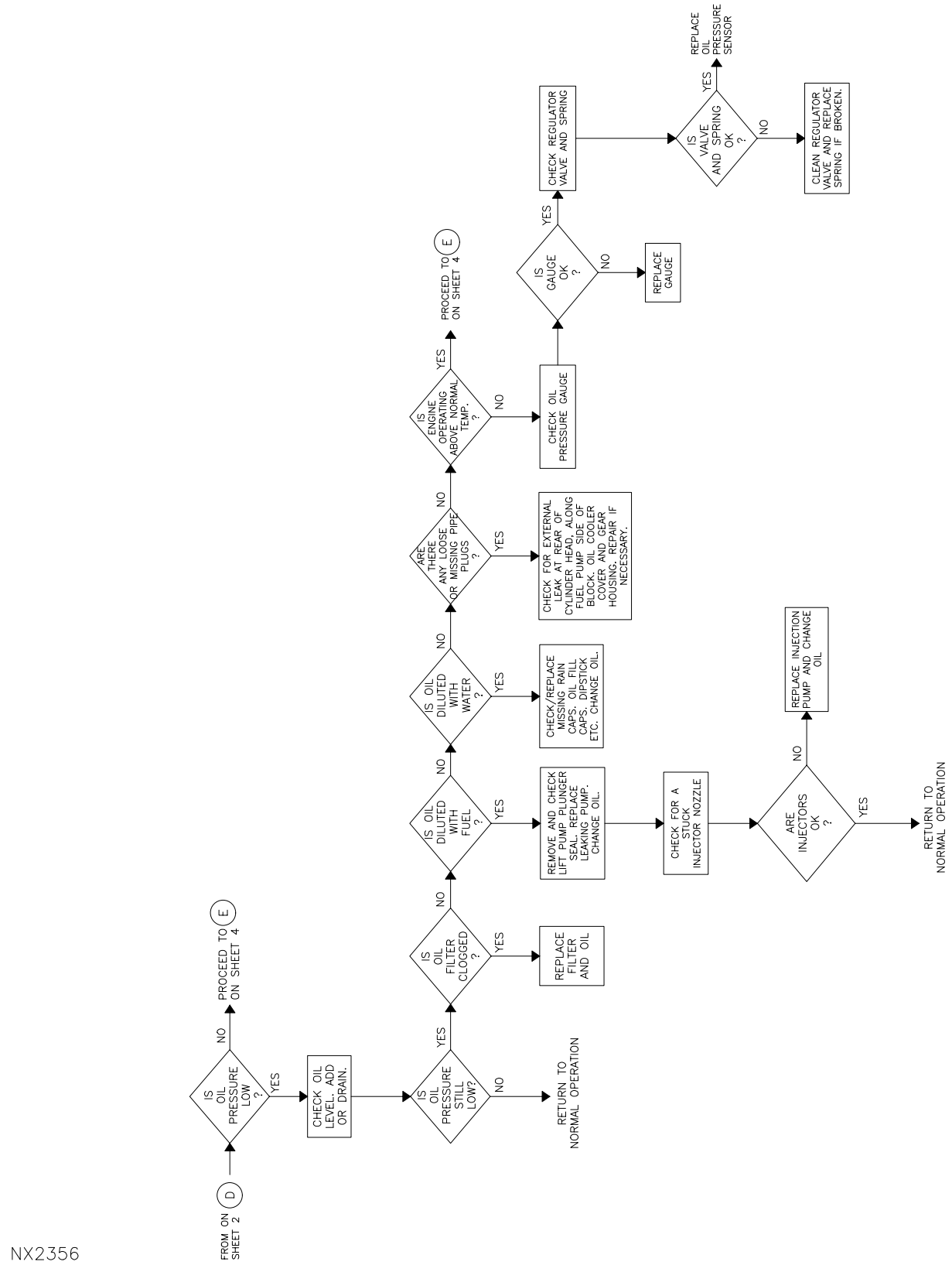

Figure 3−2. RPIE Fault Isolation Flowchart (Maint Req'd) Tower Utilities (Sheet 3 of 5)

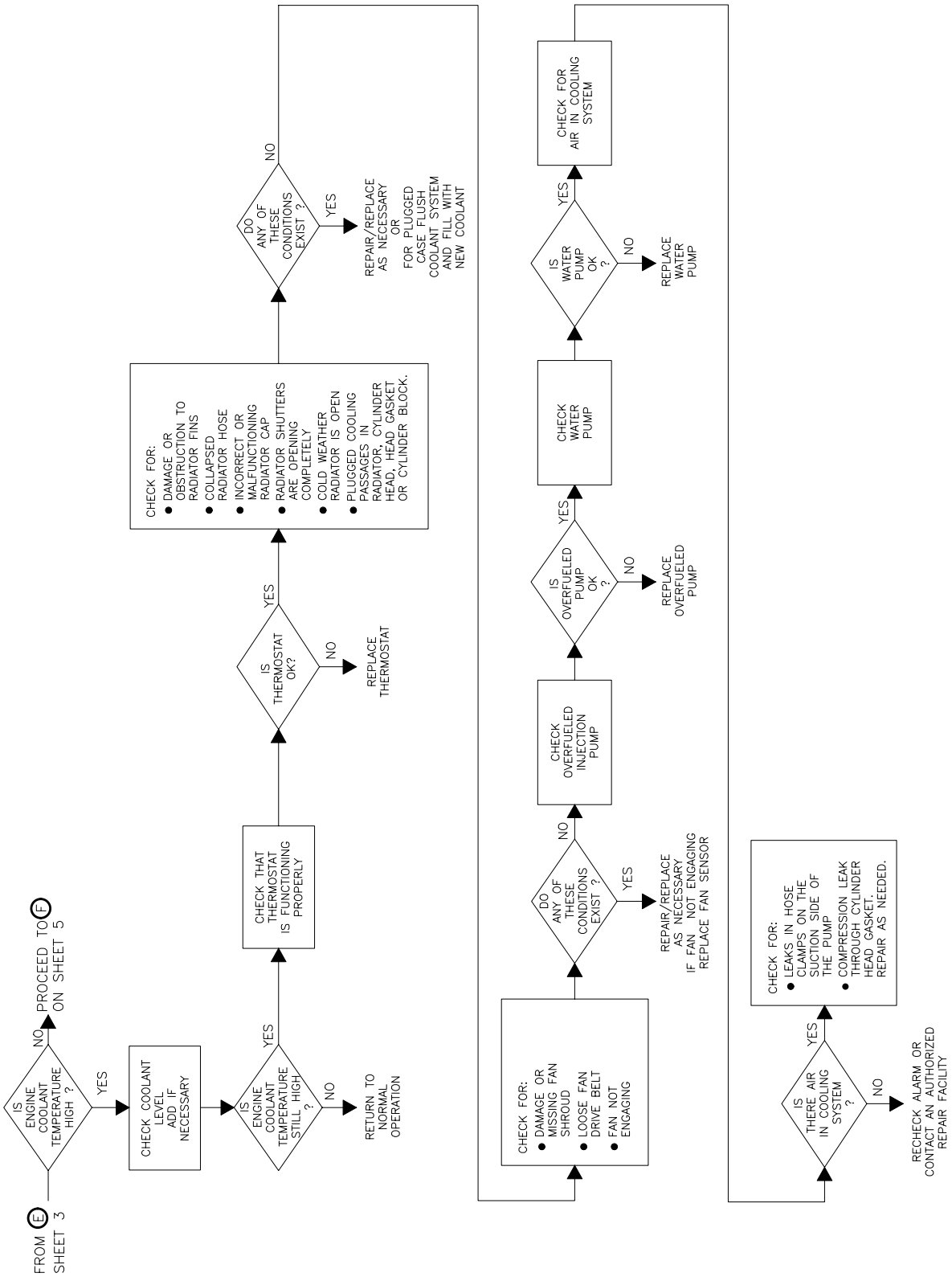

Figure 3−2. RPIE Fault Isolation Flowchart (Maint Req'd) Tower Utilities (Sheet 4 of 5)

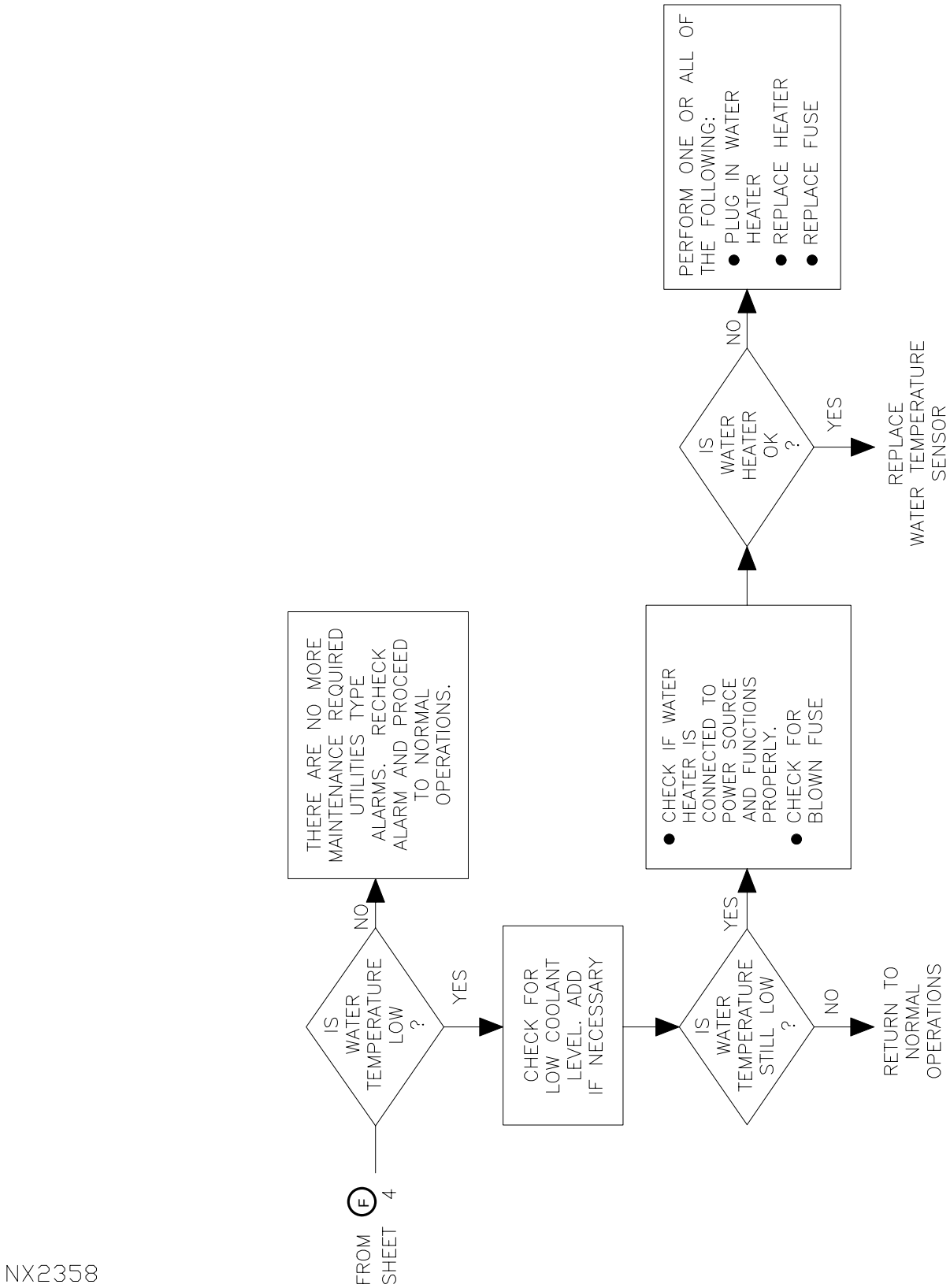

Figure 3−2. RPIE Fault Isolation Flowchart (Maint Req'd) Tower Utilities (Sheet 5 of 5)

3−3.3 RPIE FAULT MAINTENANCE PROCEDURE.

Performing the RPIE Fault Isolation Flowchart process from top to bottom without error constitutes a thorough check of the RPIE functional group. If a fault occurs, the technician has a quick guide for fault isolation and troubleshooting to the faulty LRU.

3−3.3.1 Air Conditioner Control Circuitry Troubleshooting.

This procedure requires two technicians.

3−3.3.1.1 Equipment and Tools Required.

1. Nutdriver set
2. Multimeter, digital
3. Screwdriver set, flat−tip
4. Screwdriver set, Phillips−tip

3−3.3.1.2 Initial Conditions/Preliminary Setup.

1. Perform air conditioner power−up as follows:
   a. On Main PDP set CB2, 4, 6, 12, 14, and 16 to **ON**.
   b. On AC, set CB1 to **ON**.
2. Set Thermostat UD7S3 (AC#1) temperature levers as follows:

SHELTER WITHOUT ECONOMIZER	SHELTER WITH ECONOMIZER
• Heat lever to 55°F.	• Heat lever to 50°F.
• Cooling lever to 70°F.	• Cooling lever to 75°F.

3. Set Thermostat UD7S4 (AC#2) temperature levers as follows:

SHELTER WITHOUT ECONOMIZER	SHELTER WITH ECONOMIZER
• Heat Lever to 50°F.	• Heat Lever to 55°F.
• Cooling Lever to 75°F.	• Cooling Lever to 70°F.

4. Set system switch to **AUTO** on UD7S3 and S4.
5. Set fan switch to **AUTO** on UD7S3 and S4.

3−3.3.1.3 Troubleshooting Procedure.

WARNING

Lethal voltages exist from 120/208 Vac 3−phase commercial power and can cause serious injury or **DEATH**. Observe standard safety precautions when working around or measuring these hazardous voltages.

NOTE

Perform the following system switch operation checks on Thermostats UD7S3 (AC#1) or UD7S4 (AC#2). Use of a digital multimeter is required for some of the following steps.

1. Set system switch to **HEAT** position and verify the following:

   - Heater contact operates stage 1 heating.
   - Air conditioner blower operates.

NOTE

If one or both of the operational conditions above is not accomplished, perform the following steps.

- Check for 24 Vac on air conditioner low voltage terminal pin W1. Refer to Figure FO1−3, sheets 3 and 4, for additional troubleshooting check points.
- 208 Vac (3−phase) is present on heater contactor when 24 Vac is present to initialize the contactor and heater does not operate.
- 208 Vac (1−phase) is present on indoor fan motor.

NOTE

Pin 2 (NO) of the blower motor relay contactor should have 208 Vac present and the contactor should be de−energized. If the voltage is not 208 Vac, the heater contactor (LL1) may be faulty.

2. For AC unit without economizer, set SYSTEM switch to **COOL** position and verify the following:

   - Air conditioner compressor contactor energizes compressor.
   - Air conditioner blower operates.

NOTE

If one or both of the operational conditions above is not accomplished, perform the following steps.

- Check for 24 Vac on air conditioner low voltage terminal pins G and Y. Refer to Figure FO1−3, sheets 3 and 4, or 6 and 7 for additional troubleshooting check points.
- 208 Vac (3−phase) is present on compressor contractor and 24 Vac is present to energize the contactor when compressor does not operate.
- 208 Vac (1−phase) is present on outdoor blower motor when outdoor blower motor does not operate.

- 208 Vac (1−phase) is present on indoor fan motor when 24 Vac to indoor fan contactor is available to initialize indoor fan contactor and the indoor fan does not operate.

3. For AC unit with economizer, set SYSTEM switch to **COOL** and verify the following:

   - If outside operating temperature is above 0°F, air conditioner compressor contactor energizes compressor.
   - Air conditioner blower operates.

NOTE

If one or both of the operational conditions above is not accomplished, perform the following steps:

- Check for 24 Vac (second stage cooling) on air conditioner low voltage terminal pins G and Y. Refer to Figure FO1−3, sheets 5 and 8 for additional troubleshooting check points.
- 208 Vac (3−phase) is present on compressor contactor and 24 Vac is present to energize the contactor when compressor does not operate.
- 208 Vac (1−phase) is present on outdoor blower motor when outdoor blower motor does not operate.
- 208 Vac (1−phase) is present on indoor fan motor when 24 Vac to indoor fan contactor is available to initialize indoor fan contactor and the indoor fan does not operate.

NOTE

If outside operating temperature is 0°F or below (or if this condition has been simulated using a jumper between enthalpy contacts 2 and 3), air conditioner compressor contact is not energized and compressor is not running.

- Air conditioner blower does not operate.
- Indoor blower motor operates.
- Damper modulating motor operates to place damper in fully open position.

NOTE

If any one of the operational conditions above is not accomplished, perform the following steps:

- Check for 24 Vac (first stage cooling) on air conditioner low voltage terminal pin G. Refer to Figure FO1−3, sheets 5 and 8 for additional troubleshooting check points.

- Check for 0 Vac on air conditioner low voltage terminal pin Y. Refer to Figure FO1−3, sheets 5 and 8 for additional troubleshooting check points.
- 208 Vac (1−phase) is present on indoor fan motor when 24 Vac to indoor fan contactor is available to initialize indoor fan contactor and the indoor fan does not operate.
- 24 Vac (1−phase) is present on damper modulation motor and damper does not operate.

4. Set SYSTEM switch to **AUTO** position and verify that the thermostat cycles the Cooling Stage 1 or Heating Stage 1 ON and OFF as required by the shelter environmental needs.

NOTE

Perform the following Fan Switch Operation checks using Thermostats UD7S3 (AC#1) or UD7S4 (AC#2).

5. Set the FAN switch to **ON** and verify the following:

- The indoor blower operates constantly.

NOTE

If the indoor blower does not operate, check for 24 Vac on the air conditioner low voltage terminal pin R. Refer to Figure FO1−3, sheets 3 and 4 or 6 and 7, for additional troubleshooting check points.

- 208 Vac (1−phase) is present on indoor fan motor when 24 Vac is present to initialize the indoor fan contactor.

6. Set the FAN switch to **AUTO** and verify that the indoor blower fan cycles ON and OFF in conjunction with cooling or heating stage operation.

NOTE

If the indoor blower fan does not cycle ON and OFF, check for 24 Vac on the air conditioner low voltage terminal pin G. Refer to Figure FO1−3, sheets 3 and 4 or 6 and 7, for additional troubleshooting check points.

3−3.3.2 Radome Venting Circuitry Troubleshooting.

This procedure requires two technicians.

3−3.3.2.1 Equipment and Tools Required.

1. Screwdriver set, flat−tip
2. Screwdriver set, Phillips−tip

3. Multimeter, digital

3−3.3.2.2 Initial Conditions/Preliminary Setup.

WARNING

The transmitter is in standby with high voltage off and the low voltage power supplies on for this procedure. Failure to perform the preliminary setup can cause serious injury or **DEATH** and damage to the equipment.

1. Obtain local RDA control from the MSCF and place the transmitter in a standby state by performing the following steps:

   a. At the MSCF, click on the Control Block in the RDA container and then click on Enable Local (RDA).

   b. At the RDA Applications Terminal Main Menu, enter **RELC<Enter>**.

   c. At the RDA Applications Terminal Main Menu, enter **STBY<Enter>**.

   d. At the RDA Applications Terminal Main Menu, enter **TERP<Tab>*password*<Enter>** to terminate software.

2. Remove High Voltage from the Transmitter UD3 as follows:

   a. On the Control Panel UD3A1, depress the MAINT/SYSTEM switch to illuminate MAINT.

   b. Verify that both NO CONTROL lights are not illuminated and the HV OFF light is illuminated.

   c. Disconnect cable W19, UD1S1P1 from UD1S1J1 at the Waveguide Switch. This is an added layer of protection.

   d. On the Transmitter Power Distribution Panel UD3A13, set High Voltage circuit breaker CB1 to **OFF**, lock it out, and remove key.

   e. Place a SAFETY WARNING tag on the Transmitter Control Panel.

3. At the RDA Maintenance Panel UD5A2, set the PEDESTAL ELECTRONICS POWER switch to **OFF** and place a SAFETY WARNING tag on UD5A2.

4. At the RDA Main Power Distribution Panel UD7A2, verify CB17, Radome Vent, is set to **ON**.

5. Proceed to the radome and secure the pedestal and antenna as follows:

   a. Open the radome hatch.

   b. On the Azimuth Riser UD2A1, set the PWR ON/SAFE safety interlock switch to **SAFE**.

c. Stow the antenna in Azimuth and Elevation by aligning the stow mechanisms and inserting the safety pins in the STOW position.

3−3.3.2.3 Troubleshooting Procedure.

NOTE

Refer to Figure 1−1 for radome venting equipment location and Figure 4−8 for radome venting circuitry. Use of a digital multimeter is required for some of the following steps.

1. Turn the Radome Thermostat UD2S2 knob **clockwise** and verify that:

   - Radome Fan UD11A2, operates.
   - Radome Motorized Damper Assembly UD11A1, louvers are open.

NOTES

If the fan and damper do not operate, remove thermostat cover and perform step 2. If the fan operates and the damper does not operate the louvers, remove thermostat cover and perform step 3.

If the fan does not operate and damper opens louvers, remove thermostat cover and perform step 4.

WARNING

Lethal voltages exist from 120/208 Vac 3−phase commercial power and can cause damage to equipment and serious injury or **DEATH**. Observe standard safety precautions when working around or measuring these hazardous voltages.

2. With multimeter, check for 120 Vac on both W terminal connectors.

NOTES

If 120 Vac is not present on W terminals, check for AC volts on both R terminal connectors. If 120 Vac is present on R terminal connectors, replace radome thermostat.

If 120 Vac is present on both W terminal connectors, check across fan motor and damper motor L1 and L2 for AC voltage. If AC voltage is not present at fan motor/damper motor, at RDA Main Power Distribution Panel UD7A2, set CB17 to **OFF** and check for wire continuity in interconnecting wiring.

3. With multimeter, check for 120 Vac at thermostat damper motor W terminal connection.

NOTES

If 120 Vac is not present at W terminal connector, check that wire jumper is connected between fan R terminal connector and damper R terminal connector before checking for 120 Vac at damper R terminal connector. If 120 Vac is present on damper R terminal connector, replace radome thermostat.

If 120 Vac is present at W terminal connectors, check across damper motor L1 and L2 for AC voltage. If AC voltage is not present at damper motor, at RDA Main Power Distribution Panel UD7A2, set CB17 to **OFF** and check for open in interconnecting wires. If AC voltage is present between damper motor L1 and L2, replace damper motor.

4. With multimeter, check for 120 Vac on thermostat fan W terminal.

NOTES

If damper works and AC voltage is not present at W terminals, replace radome thermostat.

If AC voltage is not present between fan motors L1 and L2, at Main Power Distribution Panel UD7A2, set CB17 to **OFF** and check for open in interconnecting wires.

If AC voltage is present between fan motors L1 and L2, replace faulty fan motor.

5. Turn the radome thermostat knob **counter−clockwise**.

NOTE

If either the vent fan continues to run or damper louver remains open, replace the thermostat.

6. Perform radome venting operational check by slowly adjusting thermostat knob **clockwise** and **counter−clockwise** and the fan and damper louvers switch to **ON** and then **OFF**.

7. Set Radome Thermostat UD2S2 to 85°F.

8. Return the RDA to operational status by performing the following steps:

   a. Disengage the Azimuth and Elevation stow pins, reposition the stow mechanisms, and insert the safety pins in the OPERATE position.

   b. On the Azimuth Riser UD2A1, set the PWR ON/SAFE switch to **PWR ON**.

   c. Close and lock the radome hatch.

   d. At the RDA Maintenance Panel UD5A2, set the PEDESTAL ELECTRONICS POWER switch to **ON** and remove the SAFETY WARNING tag.

e. Connect cable W19, UD1S1P1 to UD1S1J1 at the Waveguide Switch.

f. On the Transmitter Power Distribution Panel UD3A13, replace the interlock key, rotate it CCW to unlock, and set High Voltage circuit breaker CB1 to **ON**. Remove the SAFETY WARNING tag on the Transmitter Control Panel.

g. On the Control Panel UD3A1, depress the MAINT/SYSTEM switch to illuminate SYSTEM. Verify both NO CONTROL lights are illuminated.

h. At the RDA System Console, enter **RDAUP<Enter>**.

i. Switch to the Applications Terminal using the mouse and click on the Applications screen or press **<Alt>** and **<Tab>** keys simultaneously.

j. At the RDA Applications Terminal Main Menu, enter **OPER<Enter>**.

k. At the RDA Applications Terminal Main Menu, enter **ENRC<Enter>**.

3−3.3.3 RDA Equipment Shelter Transmitter Vent Cooling Circuitry Troubleshooting.

3−3.3.3.1 Equipment and Tools Required.

1. Screwdriver set, flat−tip
2. Screwdriver set, Phillips−tip
3. Multimeter, digital

3−3.3.3.2 Initial Conditions/Preliminary Setup.

1. Obtain local RDA control from the MSCF and place the transmitter in a standby state by performing the following steps:

   a. At the MSCF, click on the Control Block in the RDA container and then click on Enable Local (RDA).

   b. At the RDA Applications Terminal Main Menu, enter **RELC<Enter>**.

   c. At the RDA Applications Terminal Main Menu, enter **STBY<Enter>**.

   d. At the RDA Applications Terminal Main Menu, enter **TERP<Tab>*password*<Enter>** to terminate software.

2. Remove High Voltage from the Transmitter UD3 as follows:

   a. On the Control Panel UD3A1, depress the MAINT/SYSTEM switch to illuminate MAINT.

   b. Verify that both NO CONTROL lights are not illuminated and the HV OFF light is illuminated.

   c. On the Transmitter Power Distribution Panel UD3A13, set High Voltage circuit breaker CB1 of **OFF**, lock it out, and remove key.

d. Place a SAFETY WARNING tag on the Transmitter Control Panel.

3. At the RDA Main Power Distribution Panel UD7A2, verify CB22, Transmitter Vent, is set to **ON**.

3−3.3.3.3 Troubleshooting Procedure.

WARNING

Failure to perform the preliminary setup can cause damage to equipment and serious injury or **DEATH**.

NOTES

Refer to Figure 1−19, sheet 2 for the location of the Transmitter Vent Thermostat UD7S5, sheet 3 for Intake Damper Actuator UD7A9B1, and sheet 4 for Exhaust Damper Actuator UD7A10B1.

Refer to Figure 4−7 for transmitter vent cooling circuitry.

Use of a digital multimeter is required for some of the procedures.

1. Turn the Transmitter Vent Thermostat UD7S5 knob **clockwise** and verify the following:

   - Motorized Intake Damper Assembly Actuator UD7A9B1 starts and the interior intake louvers close and the exterior intake louvers open.
   - Motorized Exhaust Damper Assembly Actuator UD7A10B1 starts and the interior exhaust louvers close and the exterior exhaust louvers open.

NOTES

When none of the actuators start, check for 120 Vac at pin R on Thermostat UD7S5. If 120 Vac is present, replace thermostat.

When Motorized Damper Assembly (intake or exhaust) UD7A9 or UD7A10 does not start, check for AC voltage between L1 and L2 connection (as applicable). If AC voltage is present, replace Actuator UD7A9B1 or UD7A10B1 as applicable.

2. Turn the Transmitter Vent Thermostat UD7S5 knob **counter−clockwise** and verify the following.

   - Motorized Intake Damper Assembly UD7A9 interior intake louvers open and exterior intake louvers close.
   - Motorized Exhaust Damper Assembly UD7A10 interior exhaust louvers open and exterior exhaust louvers close.

NOTES

When none of the actuators start, check for 120 Vac at pin R on Thermostat UD7S5. If 120 Vac is present, replace thermostat.

NOTES − CONT.

When Motorized Damper Assembly UD7A9 or UD7A10 does not start, check for AC voltage between L1 and L2 connection (as applicable). If AC voltage is present, replace Actuator UD7A9B1 or UD7A10B1 as applicable.

3. Set thermostat temperature setting to **85°F**.

4. Return the RDA to operational status by performing the following steps:

   a. On the Transmitter Power Distribution Panel UD3A13, replace the interlock key, rotate it CCW to unlock, and set High Voltage circuit breaker CB1 to **ON**. Remove the SAFETY WARNING tag on the Transmitter Control Panel.

   b. On the Control Panel UD3A1, depress the MAINT/SYSTEM switch to illuminate SYSTEM. Verify both NO CONTROL lights are illuminated.

   c. At the RDA System Console, enter **RDAUP<Enter>**.

   d. Switch to the Applications Terminal using the mouse and click on the Applications Screen or press **<Alt>** and **<Tab>** keys simultaneously.

   e. At the RDA Applications Terminal Main Menu, enter **OPER<Enter>**.

   f. At the RDA Applications Terminal Main Menu, enter **ENRC<Enter>**.

3−3.3.4 Generator Ventilation Circuitry Troubleshooting.

3−3.3.4.1 Equipment and Tools Required.

1. Multimeter, digital
2. Screwdriver set, flat−tip
3. Screwdriver set, Phillips−tip

3−3.3.4.2 Initial Conditions/Preliminary Setup.

NOTE

Refer to Figure 1−3, Figure 1−4, and Figure 1−13 for equipment location and Figure 4−9 for the generator ventilation control circuitry.

1. For Onan Generators, set the RUN−STOP(RESET)−REMOTE switch to **RUN**. For Kohler Generators, set the RUN−OFF/RESET−AUTO switch to **RUN**.

2. At the Generator Shelter Power Distribution Panel, perform the following:

   a. Set CB6 and 8 to **ON**.

   b. Set CB7 to **ON**.

3−3.3.4.3 Troubleshooting Procedure.

NOTES

When generator is running, the following operational generator venting conditions exist:

- Intake Louver Assembly UD10A4 and A5 louver are open.
- Generator Exhaust Louver Assembly UD10A3 louver is open.
- Heater Lockout Relay UD10K1 energizes, removing power to the generator shelter heater.
- Exhaust Louver Assembly UD10A11 louvers are closed.
- Exhaust fan is stopped (not running).

The following procedure assumes that the Generator Shelter Ventilation Thermostat UD10S2 is open (off).

1. When operation conditions are not met, use the troubleshooting chart in Table 3−24.
2. For Onan Generators, set the RUN−STOP(RESET)−REMOTE switch to **REMOTE**.
   For Kohler Generators, set the RUN−OFF/RESET−AUTO switch to **AUTO**.

3−3.3.5 Generator Shelter Heater UD10HR1 Troubleshooting.

3−3.3.5.1 Equipment and Tools Required.

1. Screwdriver set, flat−tip
2. Screwdriver set, Phillips−tip
3. Multimeter, digital

3−3.3.5.2 Initial Conditions/Preliminary Setup.

1. Verify the following:
   - Generator is not operating.
   - Generator Shelter Thermostat Control Louver and Fan Circuitry are not operating (Figure 4−9). Louvers are closed and exhaust fan is off.
   - Heater thermostat is set to position **2** or higher.
   - Generator Shelter Power Distribution Panel UD10A2 CB1, 2, 3, 6, and 8 are **ON**.
2. Verify that heater lockout relay normally closed (NC) contact is closed (Figure 4−9).

Table 3−24. Generator Ventilation Circuitry Troubleshooting Chart

	Condition	Action	Reference
1.	All louver assembly louvers closed	Check for 24 Vdc between B and A (Onan) or 7N and 7O (Kohler) on GEN RUN RELAY K11 verify the following:	Figure 4−4 for Onan Figure 4−5 for Kohler
		• 24 Vdc present	GEN RUN RELAY K11.
		• 24 Vdc not present	Figure 4−4 for Onan Figure 4−5 for Kohler
2.	Intake Louver Assembly UD10A4 louvers closed	Check for 120 Vac between L1 and L2 connections on UD10A4B1 and verify the following:	Figure 4−4 for Onan Figure 4−5 for Kohler
		• 120 Vac present	Replace UD10A4B1.
		• 120 Vac not present	Check for broken wire.
3.	Generator Exhaust Louver Assembly UD10A3 louver closed	Check for 120 Vac between L1 and L2 connections on UD10A3B1 and verify the following:	Figure 4−4 for Onan Figure 4−5 for Kohler
		• 120 Vac present	Replace UD10A3B1.
		• 120 Vac not present	Check for broken wire.
4.	Intake Louver Assembly UD10A5 louvers closed	Check for 120 Vac between L1 and L2 connections on UD10A5B1.	Figure 4−4 for Onan Figure 4−5 for Kohler
		• 120 Vac present	Replace UD10A5B1.
		• 120 Vac not present	
		NOTE When 120 Vac is not present between L1 and L2, stop generator and rotate Thermostat UD10S2 CW.	
		• Louvers are open.	GEN RUN RELAY K11 bad.
		• Louvers stay closed.	Check for broken wires.
		• Louvers stay closed; shelter exhaust fan runs.	GEN RUN RELAY K11 bad.

Table 3−24. Generator Ventilation Circuitry Troubleshooting Chart − Continued

	Condition	Action	Reference
5.	Heater Lockout Relay UD10K1	Check for 120 Vac across relay coil and verify the following:	Figure 4−4 for Onan Figure 4−5 for Kohler
		• 120 Vac present	Replace Heater Lockout Relay UD10K1.
		• 120 Vac not present	Check for broken wires.

3−3.3.5.3 Troubleshooting Procedure.

WARNING

Failure to remove power to heater when working on heater or replacing heater could cause serious injury or **DEATH**.

Lethal voltages exist from 120/208 Vac, 3−phase commercial power and can cause serious injury or **DEATH**. Observe standard safety precautions when working around or measuring these hazardous voltages.

NOTE

Upon completion of step 2, return for step 4, step 5, and step 6. Use of a digital multimeter is required for some procedures.

1. Perform operation check procedure in Table 3−7.
2. Using multimeter and standard shop practices, ensure Vac is applied to heater through heater lockout relay.
3. If Vac does exist and heater doesn't work, replace bad heater, then go to step 5.
4. Perform operation check. (Refer to Table 3−7.)
5. Set heater thermostat to position **2**.
6. Refer to Figure FO1−1 or Figure FO1−2 for further troubleshooting points.

3−3.3.6 Security Panel Alarm Circuitry UD7A12 Troubleshooting.

This procedure requires two technicians.

3−3.3.6.1 Equipment and Tools Required.

1. Multimeter, digital

2. Screwdriver set, flat−tip

3. Screwdriver set, Phillips−tip

3−3.3.6.2 Initial Conditions/Preliminary Setup.

1. Set RDA Main Power Distribution Panel circuit breaker CB41 Alarm Panel, to **ON**.

2. Perform RDA Group Startup procedures per NWS EHB 6−510, paragraph 6−5.3.2.

NOTE

This procedure can be accomplished with the WSR−88D system in remote full operation condition. Steps 1 and 2 are the minimum power−up condition required to perform this procedure.

3. Set the security panel power switch (PS) to **ON** position.

4. Set security key switch fully **CCW**.

5. Close generator shelter door, tower gate, TPMS shelter door(s), and RDA shelter door.

3−3.3.6.3 Troubleshooting Procedure.

NOTES

Refer to Figure 1−25, Security Panel Wiring Diagram, or Figure FO1−3, sheet 1, when troubleshooting the security circuitry.

The RDA Maintenance Terminal must be initialized and the `Performance Data Tower Utilities Menu #1` displayed on the monitor.

Use standard shop practices (SSP) to determine faulty component.

Use of a digital multimeter is required for some procedures.

1. At RDA equipment shelter, turn the security key in the security key switch fully **CW**.

2. Set security panel power ON/OFF switch to **OFF** and verify that `SECURITY SYSTEM EQUIPMENT FAIL` message appears on RDA Maintenance Terminal Monitor. Refer to Figure 1−25 to perform SSP troubleshooting.

3. Set the security panel power ON/OFF switch to **ON** and verify that `SECURITY SYSTEM EQUIPMENT FAIL` message disappears on RDA Maintenance Terminal Monitor. Refer to Figure 1−25 to perform SSP troubleshooting.

4. Turn security key fully **CCW**.

NOTE

Two persons are required to perform steps 5 through 8.

5. One person must now open the RDA equipment shelter door, generator door, TPMS shelter door(s), and tower gate one at a time, while another person verifies that each door or gate causes an `UNAUTHORIZED SITE ENTRY` message to appear on the RDA Maintenance Monitor.

6. Verify after each closure of RDA equipment shelter door, generator shelter door, TPMS shelter door(s) or tower gate that message remains on monitor.

7. Press **RESET** switch to reactivate the alarm and clear message for monitor.

8. Secure shelter and turn security key **CW** and then **CCW**. See Figure 1−25 to perform SSP troubleshooting.

3−3.3.7 TPMS Environmental Control Unit UD60A11, UD60A12, UD60A15, and UD60A16 Troubleshooting.

A description of the different types of ECUs is as follows:

- UD60A11 is a 2−ton ECU, with an economizer and heating and cooling functions.
- UD60A12 is a 3−ton ECU, without economizer and only a cooling function installed in Type 4 shelters as ECU#1 (in TPS equipment room).
- UD60A15 is a 2−ton ECU, with an economizer and coated coils for harsh environments (coastal or high acidic areas).
- UD60A16 is a 3−ton, with economizer and both heating and cooling functions installed in Type 4 shelters as ECU #2 (maintenance room area).

3−3.3.7.1 Equipment and Tools Required.

1. Multimeter, digital

3−3.3.7.2 Initial Conditions/Preliminary Setup.

1. Perform Environmental Control Unit power−up using Table 2−1, step 12.e and Table 2−2, step 10.

3−3.3.7.3 Troubleshooting Procedure. TPMS ECU (Type 1, 2, 4, 5, 6, and 9 Shelters)

Checkout of Cooling Cycle

1. Set the cooling temperature selection lever on the wall thermostat to a point higher than the ambient temperature. Set the heating temperature selection lever to a temperature that is lower than the ambient temperature.

2. Set the thermostat SYSTEM switch in the AUTO position. Nothing should operate at this time.

3. Slowly lower the thermostat's cooling temperature selection lever until the indoor fan starts. Once the indoor fan is on, allow approximately three minutes for the compressor to start. Note that the outdoor fan may not come on immediately because it is cycled by refrigerant pressures.

   On ComPac II Units (UD60A11, A15, and A16), in order to check the system under different ambient conditions, the air temperature and enthalpy sensors must be "tricked". When outdoor ambient conditions are higher than the control setting, a component cooler aerosol may be sprayed directly into the enthalpy sensor to simulate low enthalpy conditions causing the economizer damper to open.

   Alternately, when outdoor conditions are lower than the set point, a source of heat such as a hair dryer can be directed on the air temperature sensor to simulate warmer conditions which will bring on mechanical cooling and start the compressor.

4. To stop cooling, slowly raise the thermostat cooling lever to a temperature higher than the ambient.

Checkout of the Heating System − Shelter (All Except Type 4 ECU #1)

1. Raise the heating temperature selection lever to a setting that is higher than the ambient temperature. The fan and electric heat should immediately cycle on.
2. Move SYSTEM switch to the OFF position. All functions should stop.
3. The damper located in the outside unit should remain closed during the heating cycle. The minimum position potentiometer also located in the outside unit should be set at the "mid" position. The economizer controller should be set at the "D" position (58°F @ 50% relative humidity).

   If the unit fails to operate in either of these modes, contact an authorized repair agency.

3−3.3.8 Electric Toilet UD60A4 Troubleshooting.

3−3.3.8.1 Equipment and Tools Required.

1. Multimeter, digital
2. Screwdriver, flat−tip
3. Screwdriver, #2 Phillips−tip

3−3.3.8.2 Initial Conditions/Preliminary Setup.

1. Toilet did not incinerate waste or did not start following use of toilet.

3−3.3.8.3 Troubleshooting Procedure.

1. Check for 120 Vac at electric toilet receptacle. If no voltage is present, check circuit breaker CB7 in TPMS Shelter Power Distribution Panel UD60A5.

2. Remove top by removing the four Phillips screws and the rubber boot on the START button.

3. Lift and remove the control box cover.

4. Check Temperature Controller and Timer settings are set at the following nominal set points:

   a. TEMPERATURE − 1000°F/550°C.

   b. TIMER − One (1) hour.

5. Press START button.

6. Ensure timer green light is **flashing**, timer red light is **on**, temperature controller red light is **on**, and heater is **on**.

   a. If timer lights are not operating, replace START button.

   b. If blower and heater come on when START button is pressed, but go off when START button is released, replace timer.

   c. If both timer and controller lights are on and heater is not, heater has failed. To verify, remove side access panel, and measure 120 Vac directly across heater terminals. If voltage appears, replace heater. If no voltage appears, check circuitry. (Refer to NWS EHB 6−554−3, page 8).

   d. If timer lights are working, but controller red light is not on, test thermocouple. Unplug toilet, remove side access cover and remove wire nuts from thermocouple leads. Twist the two AC power leads together, plug in toilet, and press START button. If controller light comes on, replace thermocouple. (Refer to NWS EHB 6−554−3).

SECTION 3−4. PREVENTIVE MAINTENANCE

3−4.1 SERVICING.

Preventive maintenance (PM) includes cleaning, lubrication, equipment inspection, operational verification, fuel replenishment, and addition of refrigerant to air conditioning equipment. Refer to the Preventive Maintenance Inspections (PMI) Work Cards Table of Contents in NWS EHB 6−503−2 or NWS EHB 6−503, Section 1 for a list of the RPIE PM procedures. When the environmental condition has extreme variations or levels, PM is performed more frequently as established by local policy. For example, if the generator runs for extended periods, the PM is performed more frequently as established by the controlling agency. In addition to the scheduled PM procedures, the PMI work cards also provide Conditional Inspections that vary greatly from site−to−site and are event based or seasonal.

3−4.2 DIESEL FUEL TANK FOULING PREVENTION.

Water in the RDA generator fuel tanks may support a growth of fungus and bacteria and cause severe corrosion. Also, fuel that remains in the tank for over a year may oxidize, forming varnish deposits in the engine, clogging filters, and forming sediment in the tanks. Consultation with the local fuel supplier is necessary to determine whether any additives are currently in the fuel, and what fuel tank maintenance services are available in the area. The fuel tanks need to be inspected for water and biological fouling before filling the tanks. If any water is detected it should be pumped out. If the tanks are fouled, have them cleaned, or replaced, if necessary. Fuel additives recommended by the supplier are to be used. These should include a biocide and a fuel stabilizer, as a minimum. A fuel system lubricant is recommended. Products which should be suitable at all sites include:

Kathon FP 1.5 biocide and LTSA−35A fuel stabilizer, which are available from:

Fuel Quality Services, Inc.
Flowery Branch, GA 30542
Telephone: 1−800−827−9790 or 770−967−9790
Fax: 770−967−9982

Lucas Fuel Treatment (lubricant), which is available from:

Commercial Lubricators, Inc.,
1350 Exchange Avenue
Oklahoma City, OK 73108
Telephone: 405−232−7689
Fax: 405−235−6886

SECTION 3−5. REMOVAL AND REPLACEMENT PROCEDURES

3−5.1 REMOVAL AND REPLACEMENT PROCEDURES.

The removal and replacement procedures reference equipment manuals when applicable. However, the removal and replacement procedures are provided in a step−by−step format and include LRUs subject to frequent or special replacement procedures. For the Powerware 9315−50 Transition Power Source (TPS) removal and replacement procedures, refer to NWS EHB 6−554−5.

ESD **CAUTION** **ESD**

All WSR−88D printed circuit cards are electrostatic sensitive devices which require special handling.

3−5.2 RPIE LRU AND COMPONENT REMOVAL/REPLACEMENT AND GENERAL CONSIDERATIONS.

Whenever a RPIE LRU or its components are being replaced, the following general considerations apply:

1. Safety. Always read the text and procedures, noting the SAFETY CAUTIONS and WARNINGS provided. Do not attempt to bypass or circumvent instructions and features provided for the safety of personnel or the protection of the equipment.

2. Power Turn−off. Always de−energize equipment before connecting/disconnecting or removing/installing components. Use the appropriate equipment shutdown procedures provided in Table 2−5 or Table 2−8, as applicable by each replacement procedure.

3. Inspection. When a new or replacement component is to be installed in the equipment, first verify it is the correct part, then inspect for physical damage. Check part numbers against the parts list to ensure correctness. Attempted installation of an incorrect part or a correct part into the wrong location can cause equipment damage.

3−5.3 HANDLING OF ELECTROSTATIC SENSITIVE DEVICES (ESD).

All WSR−88D circuit cards are ESD and must be handled using the special ESD handling procedure given below. A grounded conductive mat, wrist strap, and a suitable conductive bag are required to provide proper component protection. Use the following procedure as applicable.

ESD **CAUTION** **ESD**

The ESD symbol establishes the requirement that all paragraphs/ steps, figures with illustrations and diagrams identified by *** ESD *** must be followed as written and according to ESD device handling procedure.

1. Card Removal/Replacement

   a. Remove all power to equipment.

   b. Attach wrist strap and connect clip−lead to chassis frame.

   c. Have a conductive bag ready.

   d. Remove the item (component) and place into the conductive bag.

   e. Remove new card from its conductive package and install.

   f. Disconnect wrist strap and perform normal power turn−on.

2. ESD DIP Switch Setting

   a. Attach wrist strap and connect clip−lead to chassis frame.

   b. Place ESD on grounded conductive mat.

   c. Set DIP switches for correct setting.

   d. Install circuit card in proper slot.

   e. Remove wrist strap.

   f. Disconnect wrist strap clip from chassis frame.

NOTE

Test probes should be grounded prior to each use by touching probes to metal cabinet frame.

3−5.4 RDA/RPG/RBDDS EQUIPMENT SHUTDOWN PROCEDURES.

NOTES

The following RDA/RPG/RBDDS shutdown procedures are a condensed version of the RDA shutdown procedures in NWS EHB 6−510, paragraph 6−5.3.1 and Table 6−13 and the RPG/RBDDS shutdown procedures in NWS EHB 6−525, paragraph 4−5.2. These procedures are provided here to facilitate the RPIE remove and replacement procedures in the following paragraphs without referring to those manuals. If any conflicts arise, refer to the references listed above to resolve any conflicts.

NOTES − Cont.

These procedures are written utilizing the RDA/RPG Remote Access Terminal (RRRAT) and the corresponding keystrokes (i.e., <Enter> versus <Return> and <Alt> <Tab> versus <Shift> <Port> keys.

The initial condition is a normally operating WSR−88D Radar with the Transition Power Source (TPS) on−line, if installed, and the RDA in remote control. These procedures can be used to establish the following conditions at the RDA shelter:

- RDA in local control
- RDA applications program set in standby or terminated
- RDA Status and Control Processor powered−off
- Transmitter high voltage secured in local control mode
- RPG operating system and equipment shutdown (DoD sites only)
- Remote Base Data Distribution Server (RBDDS) equipment shutdown (Selected DoD sites only)

1. Perform the following procedures to transfer control from the MSCF to the RDA:

   a. At the MSCF workstation, on the Human Computer Interface (HCI), click on the **Control Block** in the RDA container, and observe RPG is indicated in the RDA Control: line, assuming the RPG is in control of the RDA.

   b. Click on **Enable Local (RDA)** button in the RDA Control area and click **Yes** on the confirmation pop−up window. `Enable RDA Control of RDA` is noted on the Feedback: line.

NOTE

After control is enabled from the MSCF workstation, the RDA will continue to indicate MODE REM OPER at the RDA Maintenance Terminal until RELC (Request Local Control) is performed at that terminal (either remotely or at the RDA site) assuming the RDA is in Operate.

2. At the RDA Maintenance Terminal, Applications Terminal Main Menu command and parameter lines, enter the following to terminate the applications program software:

   a. **RELC <Enter>** to request local control from the MSCF. `RELC−ACCEPTED` appears on the feedback line and LOC appears in the MODE field. The RDA is now in local control.

b. **ARCH<Tab>D<Enter>** to idle the Archive II device, if applicable.

c. **STBY <Enter>** to place the channel in standby.

d. **TERP<Tab>*password*<Enter>** to terminate applications program. Wait for message `TERP ACCEPTED` to be displayed.

e. Use the mouse and click on the Systems Console screen or press the **<Alt>** and **<Tab>** keys to access the Systems Console. After a short delay, message `Task 02: End of Task` appears to indicate the applications software has terminated and the system prompt (*) will be displayed.

3. Power−down the RDA Status and Control processor by performing the following steps at the Systems Console * prompt:

a. Enter **ERR LOG,OFF<Enter>** to turn the error logger off.

b. Enter **D TA <Enter>** to display all running tasks. If any task (except TIME) are running, enter **CA *taskname* <Enter>** to cancel each task.

c. Enter **MA DSCØ:,OFF <Enter>** to mark disk 0 off.

d. Enter **D D <Enter>** to display devices and verify disk 0 is off.

e. Simultaneously press the **<Ctrl>** and **V** keys twice, then press the **<Enter>** key until the CDS> prompt appears.

f. At the CDS> prompt, enter **KEY 1,*password* <Enter>**.

g. At the CDS> prompt, enter **HA <Enter>** to halt the CPU processor.

h. At the CDS> prompt, enter **PO OFF <Enter>** to turn off the DC power supply to the processor boards.

i. At the RDA Cabinet AC PDP UD5A14, set the ON/OFF circuit breaker CB1 to **OFF**.

4. Perform the following steps at the Transmitter UD3 to remove high voltage:

a. At the Transmitter Control Panel UD3A1, depress the MAINT/SYSTEM switch to illuminate MAINT.

b. At the Transmitter Control Panel UD3A1, verify that both NO CONTROL lights are not illuminated and that the HV OFF light is illuminated.

c. At the Transmitter Power Distribution Panel UD3A13, place the High Voltage Power circuit breaker CB1 and Auxiliary Power circuit breaker CB2 to **OFF**, rotate the interlock key CW, and remove key.

d. Place a SAFETY WARNING tag on the Transmitter Control Panel.

5. Shutdown the RPG. **(DoD sites only)**. At the RPGPCA Cabinet UD70 workstation, perform the following steps:

a. If already at the CDE login screen, skip to step 5.d.

b. If within CDE, exit CDE by clicking on the **EXIT** button on the CDE Front Panel and then click on the **OK** button in the confirmation pop−up window.

c. Wait for the CDE login screen to appear.

d. At the RPG Processor UD70A7, push the power button on the front of the processor.

e. Wait for approximately 1 minute until the `OK` prompt appears, indicating the operating system has been terminated.

f. At the RPGPCA Cabinet UPS Assembly UD70A11, press the “0” (OFF) power switch button. This will remove power from most of the equipment in the RPG cabinets.

g. At the RPGPCA Cabinet Power Distribution Panel UD70A22, located at the rear of the processor cabinet, set the circuit breaker (CB1) to **OFF**.

6. Shutdown the RBDDS. **(Selected DoD sites only)**. At the RBDDS Workstation UD72, perform the following steps:

a. If already at the CDE login screen, skip to step 6.d.

b. If within CDE, exit CDE by clicking on the **EXIT** button on the CDE Front Panel and then click on the **OK** button in the confirmation pop−up window.

c. Wait for the CDE login screen to appear.

d. At the RBDDS Processor UD72A1, push the power button on the front of the processor.

e. Wait for approximately 20 seconds until the `OK` prompt appears, indicating the operating system has been terminated.

3−5.5 RDA/RPG/RBDDS EQUIPMENT STARTUP PROCEDURES.

NOTES

The following RDA/RPG/RBDDS restoration procedures are a condensed version of the RDA startup procedures in NWS EHB 6−510, paragraph 6−5.3.2 and Table 6−15 and the RPG startup procedures in NWS EHB 6−525, paragraph 4−5.3. These procedures are provided here to facilitate restoring the RDA/RPG equipment after RPIE remove and replacement procedures in the following paragraphs without referring to those manuals. If any conflicts arise, refer to the references listed above to resolve any conflicts.

NOTES − CONT.

These procedures are written utilizing the RDA/RPG Remote Access Terminal (RRRAT) and the corresponding keystrokes (i.e., <Enter> versus <Return> and <Alt> <Tab> versus <Shift> <Port> keys.

These procedures can be used to establish the following conditions at the RDA shelter:

- RDA Status and Control Processor power−on
- RPG cabinet equipment and operating system startup (DoD sites only)
- Remote Base Data Distribution Server (RBDDS) startup (Selected DoD sites only)
- Transmitter high voltage restored
- RDA applications program restarted
- RDA returned to remote control

1. Power−up the RDA Status and Control processor by performing the following steps at the RDA Systems Console:

   a. At the RDA Cabinet AC PDP UD5A14, set the ON/OFF circuit breaker CB1 to **ON**.

   b. Press the **<Enter>** key until CDS> prompt appears. If the CDS> prompt is not present, simultaneously press **<Ctrl>** and **V** keys twice, and then **<Enter>** key twice to change to the CDS> prompt.

   c. At the CDS> prompt, enter **KEY 1,*password* <Enter>**.

   d. At the CDS> prompt, enter **PO ON <Enter>** and wait approximately 2 to 3 minutes for the system to initialize. The RDA Main Menu will appear after the system is initialized.

   e. Using the mouse, click on the Applications screen or press the **<Alt>** and **<Tab>** keys to place the cursor on the Applications command line.

2. Startup the RPG. (**DoD sites only**). At the RPGPCA Cabinet UD70 workstation, perform the following steps:

   a. At the RPGPCA Cabinet Power Distribution Panel UD70A22, located at the rear of the processor cabinet, set the circuit breaker (CB1) to **ON**.

   b. At the RPGPCA Cabinet UPS Assembly UD70A11, press the “1/Test” (ON) power switch button.

   c. Wait for the CDE login screen to appear (approx. 45 seconds), then login in as a normal user.

d. At a normal terminal window user prompt, enter **hci& <Enter>**. This will start the RPG HCI on the RPG maintenance terminal.

e. At the RPG HCI, verify the RPG returned to a normal operational state.

3. Startup the RBDDS. **(Selected DoD sites only)**. At the RBDDS Workstation UD72, perform the following step:

   a. At the RBDDS Processor UD72A1, press the power switch, located at the rear of the processor, to the On position. The RBDDS processor will boot all the way up.

4. Perform the following steps at the Transmitter UD3 to restore high voltage:

   a. Remove the SAFETY WARNING tag on the Transmitter Control Panel.

   b. At the Transmitter Power Distribution Panel UD3A13, set the Auxiliary Power circuit breaker CB2 to **ON**, replace the interlock key, rotate key CCW to unlock, and set the High Voltage Power circuit breaker CB1 to **ON**.

   c. At the Transmitter Control Panel UD3A1, depress the MAINT/SYSTEM switch to illuminate SYSTEM and verify the NO CONTROL lights are illuminated.

5. At the RDA Maintenance Terminal, Applications Terminal Main Menu command and parameter lines, enter the following to bring the system to an operational state and return control to the MSCF:

   a. **ARCH<Tab>D<Enter>** to turn on the archive unit and wait until the Archive II status indicates LOADED, if applicable.

   b. **OPER <Enter>** and verify the status line changes to OPER.

   c. **ENRC <Enter>** to enable remote control.

3−5.6 REMOVAL/REPLACEMENT PROCEDURES.

The following subparagraphs contain the replacement procedures for the LRUs listed in Table 3−25 which require special setup or procedures.

Table 3−25. RPIE Removal/Replacement Procedure Index

UD No.	Title	Para.
RDA Equipment Shelter		
7A2	Circuit Breaker, Main Power Distribution Panel	3−5.6.1
7A3	Circuit Breaker, Secondary Power Distribution Panel	3−5.6.2
7A4	Vibrating Alarm Horn	3−5.6.3
7A5A1	Micro 1 EV Fire Detection Panel Printed Circuit Board	3−5.6.4
7A5A1	Micro Junior Fire Detection Panel Printed Circuit Board	A−1.4
7A5T1	Micro Junior Fire Detection Panel Transformer	A−1.5
7A6/A7	Manual Discharge and Abort Stations	3−5.6.5
7A11	Surge Suppressor	3−5.6.6
7A11A1	Protector Module, Surge Suppressor	3−5.6.7
7A14/A15	Air Conditioner Clogged Filter Indicator	3−5.6.8
7A16	Transmitter Clogged Filter Indicator	3−5.6.9
7A17/A23	Photoelectric and Ionization Smoke Detector	3−5.6.10
7A18/7A19	AC#1/AC #2 Discharge Air Temperature Sensor	3−5.6.11
7A20	Interior Room Air Temperature Sensor	3−5.6.12
7A21	Transmitter Exhaust Air Temperature Sensor	3−5.6.11
7A22	Exterior Air Temperature Sensor	3−5.6.13
7AC1B1/7AC2B1	Evaporator Fan Motor	3−5.6.14
7AC1B2/7AC2B2	Condenser Fan Motor	3−5.6.15
P/O 7AC2	Economizer ECW−4A (for Model WA60 Air Conditioner)	3−5.6.16
P/O 7AC2	Economizer EIFM−5 (for Model WA601/2 Air Conditioner)	3−5.6.17
7DS1	Alarm Strobe Light	3−5.6.18
7DS2	Exterior Incandescent Light Fixture	3−5.6.19
7S3/S4	Thermostat, AC#1 and AC#2 (without Economizer)	3−5.6.20
7S4	Thermostat, Two−Stage AC#2 (Sites with Economizers)	3−5.6.21
7S5	Thermostat, Ventilation	3−5.6.22
7S6	Contactor	3−5.6.23
Generator Equipment Shelter		
10A2CB1/3	Circuit Breaker, Main CB1/3 Power Distribution Panel	3−5.6.24
10A2CB5−9	Circuit Breaker, Single, Power Distribution Panel	3−5.6.25
10A6A1	Fuel Level Sensor Assembly	3−5.6.26
10A6A1A2	Electronic Unit, Fuel Level Sensor	3−5.6.27
10A6A1E1	Spark Arrester, Fuel Level Sensor	3−5.6.28
10A6A1E2	Surge Suppressor, Fuel Level Sensor	3−5.6.28
10A7	Interior Room Air Temperature Sensor	3−5.6.12
10A8	Thermal Detector	3−5.6.29
10A20	Surge Suppressor	3−5.6.30
10A20DS1−DS3	LED Assembly, Surge Suppressor	3−5.6.31
10A20E1−E6	Protector Modules, Surge Suppressor	3−5.6.32

Table 3−25. RPIE Removal/Replacement Procedure Index (continued)

UD No.	Title	Para.
Generator Equipment Shelter		
10A20E2	N−G (Neutral−Ground) Protector, Surge Suppressor	3−5.6.33
10A20F1−F3	Fuses, Surge Suppressor	3−5.6.34
10DS1	Exterior Incandescent Light Fixture	3−5.6.19
10S2	Thermostat, Ventilation	3−5.6.35
Onan Automatic Transfer Switch		
10A1A1−1	Accessory Control Panel	3−5.6.36
10A1A1K1−1	Relay, Accessory Control Panel	3−5.6.37
10A1A1K2−1	Relay, Accessory Control Panel	3−5.6.37
10A1A1K3−1	Relay, Accessory Control Panel	3−5.6.37
10A1A1T1−1	Transformer, Accessory Control Panel	3−5.6.38
10A1A1T2−1	Transformer, Accessory Control Panel	3−5.6.38
10A1A2−1	Signal Module	3−5.6.39
10A1A3−1	Exerciser Clock	3−5.6.40
10A1A4−1	Power Sentry Motherboard	3−5.6.41
10A1A4A1−1	Source 1 Voltage Sensing Module	3−5.6.42
10A1A4A2−1	Time Delay Module	3−5.6.42
10A1A4A3−1	Source 2 Voltage Sensing Module	3−5.6.42
10A1A6−1	Battery Charger	3−5.6.43
10A1A8−1	Program Transition Module	3−5.6.44
10A1A9−1	Power Sentry Transformer PCB	3−5.6.45
10A1TD1(K1)	Relay, Time Delay	3−5.6.46
10A1K2−1	Relay, Auxiliary Contacts (Normal/Emergency Alarm)	3−5.6.47
10A1K3−1	Relay, Auxiliary Contacts (Normal/Emergency Alarm)	3−5.6.47
10A1K7	Relay, Auto/Manual Transfer Control	3−5.6.48
Kohler Automatic Transfer Switch		
10A1A1	Microcontroller Assembly	3−5.6.49
10A1A2	Contactor Assembly	3−5.6.50
10A1A3	3−Phase Voltage Sensing Module PCB	3−5.6.51
10A1A4	Relay, Dry Contact (DCK1)	3−5.6.52
10A1A5	Relay, Dry Contact (DCK2)	3−5.6.52
10A1A6	Battery Charger	3−5.6.53
10A1A7	Load Shed PCB	3−5.6.54
10A1A8	Relay Assembly, Dry Contact (10 Relay) (LSCK)	3−5.6.55
10A1F1−F4	Fuses	3−5.6.56
10A1K1 (TD1)	Relay, Time Delay	3−5.6.57
10A1K2 (VSR)	Relay, Voltage Sensing	3−5.6.58
10A1K3−K7	Relay	3−5.6.59

Table 3−25. RPIE Removal/Replacement Procedure Index (continued)

UD No.	Title	Para.
Kohler Automatic Transfer Switch		
10A1T1−T3	Transformer	3−5.6.60
Steel Tower		
11A1B1	Damper Motor Actuator	3−5.6.61
11A2	Vent Fan Assembly	3−5.6.62
11A2B1	Motor, Radome Fan	3−5.6.63
Radome		
12A1DS1/DS2	Aircraft Warning Lights	3−5.6.64
MLOS Equipment Shelter		
13A1	Circuit Breaker, MLOS Power Distribution Power Panel	3−5.6.65
13DS1	Exterior Incandescent Light Fixture	3−5.6.19
TPMS Shelter		
60A4	Electric Toilet, TPMS Shelter	3−5.6.66
60A5	Circuit Breaker, TPMS Shelter Power Distribution Panel	3−5.6.67
60A10	Hydrogen Detector	3−5.6.68
60A10A1	Sensor Board, Hydrogen Detector	3−5.6.69
60A13CB1	Circuit Breaker, Hydrogen Detector	3−5.6.70
60A14	ECU Thermostat, TPMS Shelter	3−5.6.71
60DS1 − 3	Exterior Incandescent Light Fixture	3−5.6.19
60A2A8	Thermostat, Shelter High Temperature Shutdown	3−5.6.72
60A3A1	Thermostat, Shelter High Temperature Alarm	3−5.6.73
65	Supervisory Contact Module (SCM) PCB	3−5.6.74
Transition Power Source (TPS) Components (Refer to NWS EHB 6−554−5)		
62	TPS Cabinet Components	
63	Battery Cabinet	
64	Maintenance Bypass Module	

3−5.6.1 Circuit Breaker, Main Power Distribution Panel UD7A2 Removal/Replacement.

This procedure requires two technicians.

3−5.6.1.1 Equipment and Tools Required.

1. Screwdriver set, flat−tip
2. Flashlight

3−5.6.1.2 Initial Conditions/Preliminary Setup.

CAUTION

This procedure will turn off all circuit breakers in the Main Power Distribution Panel (PDP). This will shut off all auxiliary equipment, mainly the RDA shelter air conditioning system and the TPMS air conditioner(s). This action may result in both shelters becoming excessively hot. The Secondary PDP, and therefore, all RDA/RPG equipment, will continue to be powered by the TPS system, even in TPS Bypass mode. If the outage will be lengthy, it may be advisable to turn off all circuit breakers in the Secondary PDP to completely shutdown all RDA equipment.

1. Perform the applicable RDA, RPG, and RBDDS equipment shutdown procedures per paragraph 3−5.4.

CAUTION

The TPS should be shutdown as a precaution to guard against excessive temperature within the TPMS shelter since the air conditioner will be shut off and the shelter temperature may exceed the 80°F level to maintain maximum battery life. Battery life degrades when the ambient temperature exceeds 80°F.

2. Perform TPS shutdown procedure per Table 2−8, steps 1 through 3.

3−5.6.1.3 Removal/Replacement Procedure.

WARNING

Failure to perform the preliminary setup can cause damage to equipment and serious injury or **DEATH**.

1. Open the door of the RDA Main PDP to gain access to the circuit breakers.
2. On the RDA Main Power Distribution Panel (PDP) UD7A2, set all circuit breakers, including the main circuit breaker, to **OFF**.

3. Using the proper screwdriver, remove the outer panel of the Main PDP by loosening the holding screws.

CAUTION

Even with the Main PDP main circuit breaker in the off position, there is still 120 Vac, 3−phase power on the main circuit breaker bottom terminals. Use extreme caution when working in this panel.

4. Using the proper screwdriver, remove the inner panel of the Main PDP by removing the holding screws.
5. Tag and remove the lead from the circuit breaker to be replaced, using the proper screwdriver.
6. Disengage the circuit breaker by pulling it outward and to the side.
7. Insert the new circuit breaker.
8. Untag and connect the lead to the new circuit breaker, using the proper screwdriver.
9. Using the proper screwdriver, install the inner panel by inserting and tightening its holding screws.
10. Using the proper screwdriver, install the outer panel by tightening its holding screws.
11. On the RDA Main PDP, set all the circuit breakers to **ON**.
12. Restore the TPS to normal operation per Table 2−9, steps 4 through 9.
13. Perform the applicable RDA, RPG, and RBDDS equipment startup procedures per paragraph 3−5.5.

3−5.6.2 Circuit Breaker, Secondary Power Distribution Panel UD7A3 Removal/Replacement.

This procedure requires two technicians.

3−5.6.2.1 Equipment and Tools Required.

1. Screwdriver set, flat−tip
2. Flashlight
3. Multimeter, digital

3−5.6.2.2 Initial Conditions/Preliminary Setup.

1. Perform the applicable RDA, RPG, and RBDDS equipment shutdown procedures per paragraph 3−5.4.

2. Open the door of the Secondary PDP to gain access to the circuit breakers.
3. On the RDA Secondary PDP UD7A3, set all circuit breakers to **OFF**.
4. At the RDA CEC Coil Control Box UD7TPS1, set the circuit breaker to **OFF**.

3−5.6.2.3 Removal/Replacement Procedure.

WARNING

Failure to perform the preliminary setup can cause damage to equipment and serious injury or **DEATH**.

1. Using the proper screwdriver, remove the outer panel of the Secondary PDP by loosening the holding screws.
2. Using the proper screwdriver, remove the inner panel of the Secondary PDP by removing the holding screws.
3. Using a digital multimeter, verify there is no voltage on the bus terminals at the bottom of the Secondary PDP.
4. Tag and remove the lead from the circuit breaker to be replaced, using the proper screwdriver.
5. Disengage the circuit breaker by pulling it outward and to the side.
6. Insert the new circuit breaker.
7. Untag and connect the wire lead to the new circuit breaker, using the proper screwdriver.
8. Install the inner panel by inserting and tightening its holding screws.
9. Install the outer panel by tightening its holding screws.
10. At the RDA CEC Coil Control Box UD7TPS1, set the circuit breaker to **ON**.
11. On the RDA Secondary PDP, set all circuit breakers to **ON**.
12. Perform the applicable RDA, RPG, and RBDDS equipment startup procedures per paragraph 3−5.5.

3−5.6.3 Vibrating Alarm Horn UD7A4 Removal/Replacement.

One technician is required for this procedure.

3−5.6.3.1 Equipment and Tools Required.

1. Screwdriver set, Phillips
2. Pliers, diagonal cutters

3. Ear Protection

3−5.6.3.2 Initial Conditions/Preliminary Setup.

1. Perform the applicable RDA, RPG, and RBDDS equipment shutdown procedures per paragraph 3−5.4.

NOTE

As part of the TPMS installation, the circuit breaker for the Fire Detection Panel should have been moved from the Main PDP CB20 position to the Secondary PDP CB13 position. However, if CB13 was occupied, the electrician may have placed it elsewhere in the Secondary PDP.

2. At the Secondary PDP UD7A3, set the Fire Suppression/Detection Panel circuit breaker CB13 to **OFF**.

3−5.6.3.3 Removal/Replacement Procedure.

WARNING

Failure to perform the preliminary setup can cause damage to equipment and serious injury or **DEATH**.

1. Remove alarm grill and alarm by removing four screws.
2. Tag and disconnect wires from alarm.
3. Obtain new alarm.
4. Using tags as guides, connect wires to new alarm.
5. Secure alarm and alarm grill to wall using screws previously removed.
6. Restore AC power to the Fire Detection Panel UD7A5. At the Secondary PDP, set the Fire Suppression/Detection Panel circuit breaker CB13 to **ON**.

CAUTION

The following step will test the new alarm horn and trip the main circuit breaker in the Main PDP and shutdown all auxiliary equipment powered by the Main PDP, to include the TPMS shelter. It will also trip the Contactor coil and remove all power from the Secondary PDP. Ensure the preliminary steps were performed to shutdown the RDA and RPG (DoD sites) equipment to prevent any possible equipment damage.

WARNING

Wear ear protection during test. Hearing loss can occur from prolonged exposure to high noise.

7. To test alarm horn, proceed to paragraph 3−5.6.4.3, step 14 and perform the operational test of the Fire Detection Panel UD7A5.

8. Perform the applicable RDA, RPG, and RBDDS equipment startup procedures per paragraph 3−5.5.

3−5.6.4 Printed Circuit Board, Micro 1 EV UD7A5A1 Removal/Replacement.[1]

This procedure requires two technicians.

3−5.6.4.1 Equipment and Tools Required.

1. Screwdriver set, flat−tip
2. Screwdriver set, Phillips−tip
3. Pliers, needle nose
4. Multimeter
5. ESD Component Handling Kit
6. Hearing Protection

3−5.6.4.2 Initial Conditions/Preliminary Setup.

WARNING

The printed circuit board in the Micro 1 EV Fire Detection System Panel UD7A5 has three inputs of 115 Vac power coming into the panel. It is imperative that each power input be identified and shut off. Failure to remove all power inputs may result in contact with a live electrical circuit and possibly cause severe injury or **DEATH** on contact.

1. Perform the applicable RDA, RPG, and RBDDS equipment shutdown procedures per paragraph 3−5.4.

2. Disconnect one of the battery terminal wires to remove the DC voltage from the Fire Detection System PCB.

3. At the Main PDP UD7A2, set the Shunt Trip circuit breaker CB30 to **OFF**.

– – – – –

1 For removal/replacement procedure of the Micro Junior printed circuit board refer to paragraph A−1.4 of Appendix A.

NOTE

As part of the TPMS installation, the circuit breaker for the Fire Detection Panel should have been moved from the Main PDP CB20 position to the Secondary PDP CB13 position. However, if CB13 was occupied, the electrician may have placed it elsewhere in the Secondary PDP. For configuration control, the breaker should be at CB13.

4. At the Secondary PDP UD7A3, set the Fire Suppression/Detection Panel circuit breaker CB13 to **OFF**.

5. At the Secondary PDP UD7A3, set all other circuit breakers to **OFF**.

6. At the TPS Critical Equipment Contactor (CEC) Coil Control Box UD7TPS1, set the circuit breaker to **OFF**.

NOTE

Setting these circuit breakers to off should remove the three 115 Vac inputs to the Fire Detection Panel UD7A5 printed circuit board.

7. At the Fire Detection Panel UD7A5, open the panel door to gain access to the printed circuit board.

   a. Remove the plastic terminal cover from TB8 and set aside.

   b. Use a multimeter to verify there is no line AC voltage at the following points:

Point of Measure	Source of Power
AUX1 OUT pin 32 to 33	Main PDP CB30 Shunt Trip
Fire Detection Panel Input Power terminals “H” to “N”	Secondary PDP CB13
AUX2 OUT pin 34 to 36	TPS CEC Coil Control UD7TPS1

3−5.6.4.3 Removal/Replacement Procedure.

WARNING

Failure to perform the preliminary setup can cause damage to equipment and serious injury or **DEATH**.

ESD **CAUTION** **ESD**

All WSR−88D printed circuit cards are electrostatic sensitive devices which require special handling.

1. Put ESD wristband on and attach alligator clip to cabinet chassis.
2. Remove the connector plug from J1 located at the top of the Micro 1 EV PCB card.
3. Using the proper screwdriver, tag and remove all the leads connected to the terminal boards of the Micro 1 EV PCB card.
4. Using the proper Phillips screwdriver, remove and set aside the four holding screws securing the PCB to chassis.
5. Remove the Micro 1 EV PCB card and set on grounded conductive bag.
6. Remove the new Micro 1 EV PCB from its protective bag and lay it on the bag or grounded conductive mat and compare the two boards for the proper number of, and location of the terminating resistors. If any terminating resistors are missing on the new board, remove them from the defective board one at a time and install them on the new board in the same location. Remove the plastic terminal board cover from TB8. Also, compare the boards for proper jumper connections (TB1 and TB3 on left side of board) and DIP switch settings (Micro Junior). Verify the new board has K4 AUX1 OUT and K5 AUX2 OUT relays installed. The Main PDP shunt trip circuit will not trip without K4 and Contactor UD7S6 will not close without K5 installed.
7. Using the proper Phillips screwdriver, install the new Micro 1 EV PCB card by inserting and tightening the four holding screws which were set aside in step 4.
8. Untag and connect the leads to the Micro 1 EV PCB card terminal boards, using the proper screwdriver.
9. Connect the connector plug to J1 on the top of the Micro 1 EV PCB card.
10. Install the plastic terminal board cover removed in step 6.
11. Remove the ESD wristband and disconnect alligator clip from chassis.
12. Restore AC power to the Fire Detection Panel by performing the following steps:
    a. At the TPS CEC Coil Control Box UD7TPS1, set the circuit breaker to **ON**.
    b. At the Secondary PDP, set Fire Suppression/Detection Panel circuit breaker CB13 to **ON**. At this time leave all other circuit breakers off.
    c. At the Main PDP, set Shunt Trip circuit breaker CB30 to **ON**.
    d. Reconnect the battery connector to the battery terminal.
    e. At the Fire Detection Panel, press the **Reset** button to clear alarms.
13. Perform the Fire Detection Panel programming procedures per Table 2−3, step 2.
14. Perform an operational check to ensure the Fire Detection Panel is functioning properly and to test the shunt trip function of the Main PDP UD7A2 and Contactor UD7S6 as follows:

a. On the Main PDP UD7A2, ensure circuit breaker CB30, Shunt Trip, is ON.

b. At the Fire Detection System Control Panel UD7A5A1 keypad, perform the following:

   1) Verify the green AC power LED is illuminated and all other LEDs (trouble and alarm) are off.

   2) Press the **Lamp Test** key and observe that all LEDs illuminate and `8.8.8.8.` is displayed, then after a few seconds `SAFE` displays.

   3) Press and release the **Battery Test** key and observe that the following are displayed in succession: `bAtt, PASS`, then `SAFE`, when test is complete.

   4) Press and release **Battery Test** key and then press **Battery Volts Amps** key and observe that the voltage is 25.5 to 26 Vdc and `PASS` displays after 10 seconds. `SAFE` displays when test is complete.

   5) Press and release the **Panel Test** key. This tests the microprocessor and memory. Verify the following are displayed in succession: `tESt, E7E7, PASS`, then `SAFE`, when test is complete.

c. Open the RDA shelter door and latch it open.

WARNING

In the following steps, the vibrating alarm horn will sound off. Wear hearing protection during the test. Hearing loss can occur from prolonged exposure to high noise levels.

CAUTIONS

Excessive spraying of smoke detector tester (canned smoke) at close range may affect or damage the detectors sensitivity.

The following steps will test the capability of the Fire Detection System to detect smoke and shut the power off. The RDA shelter will become dark and quiet. Have the flashlight nearby.

d. Spray one of the smoke detectors with smoke detector tester (canned smoke) from a distance of 2 to 8 feet for 1 to 2 seconds or until detector sensor light (LED) indicates activation (steady on).

e. Verify that each of the following events occurs simultaneously after one detector has been sprayed and activated.

   1) LED on the smoke detector will illuminate steady.

   2) Alarm horn sounds with a steady tone.

3) Exterior Fire Detection strobe light flashes.

4) The main circuit breaker in the Main PDP UD7A2 trips OFF.

f. On the Fire Detection System Control Panel UD7A5A1, press **Reset** on the keypad.

g. At the Main PDP UD7A2, reset the main circuit breaker. The lights, air conditioners, and rest of equipment powered by the Main PDP should power−up. Check the TPMS shelter and ensure power was restored and the ECU(s) is/are operating.

h. Repeat steps d through g on other fire/smoke detector.

i. On the Fire Detection System Control Panel UD7A5A1, perform the following steps:

1) Verify the green AC Power LED is illuminated.

2) Press **Reset** key on keypad.

3) Verify that no alarm or fault LEDs are illuminated.

4) Verify `SAFE` displays when test is complete.

j. On the Fire Detection System Control Panel UD7A5A1, press the following keys to clear alarm recall memory:

ACTION	ALPHA−NUMERIC DISPLAY
1. Program	`Prog`
2. Alarm Recall	`----`
3. *	`---`
4. Program	`--`
5. Alarm Recall	`-`
6. Enter	`Prog` momentarily, then `SAFE` displays
7. Alarm Recall	`----`, then approximately 20 seconds later, `SAFE` displays. This verifies memory is cleared.

k. Unlatch the RDA shelter door and close it.

15. Restore system to normal operation as follows:

a. At the Secondary PDP UD7A3, set all circuit breakers to **ON**.

b. Perform applicable RDA/RPG/RBDDS equipment startup procedures per paragraph 3−5.5.

16. Perform a Fire Detection system verification check per Table 3−9, steps 2 and 3.

3−5.6.5 Manual Discharge and Abort Stations UD7A6 and A7 Removal/Replacement.

This procedure requires one technician.

3−5.6.5.1 Equipment and Tools Required.

1. Screwdriver set, flat−tip
2. Pliers, diagonal cutters
3. Ear Protection
4. Flashlight

3−5.6.5.2 Initial Conditions/Preliminary Setup.

1. Perform the applicable RDA, RPG, and RBDDS equipment shutdown procedures per paragraph 3−5.4.

NOTE

As part of the TPMS installation, the circuit breaker for the Fire Detection Panel should have been moved from the Main PDP CB20 position to the Secondary PDP CB13 position. However, if CB13 was occupied, the electrician may have placed it elsewhere in the Secondary PDP.

2. At the Secondary PDP UD7A3, set the Fire Suppression/Detection Panel circuit breaker CB13 to **OFF**.

3−5.6.5.3 Removal/Replacement Procedure.

WARNING

Failure to perform the preliminary setup can cause damage to equipment and serious injury or **DEATH**.

1. Remove cover from switch by removing two screws.
2. Tag and disconnect wires from switch and remove switch.
3. Obtain a replacement switch.
4. Using tags as guides, connect wires to proper terminal screws.
5. With switch in box, place cover over box and secure with two screws previously removed.
6. Restore AC power to the Fire Detection Panel UD7A5. At the Secondary PDP, set the Fire Suppression/Detection Panel circuit breaker CB13 to **ON**.
7. Open the RDA shelter door and latch it open.

CAUTION

The following step will test the Manual Discharge Station Switch UD7A6. With the removal of the Halon tank, the Manual Discharge and Abort Stations no longer have an operational function. However, setting the Manual Discharge Station switch to On will sound the alarm horn and immediately trip the main circuit breaker in the Main PDP and shutdown all auxiliary equipment powered by the Main PDP, to include the TPMS shelter. It will also trip the Contactor coil and remove all power from the Secondary PDP. Ensure the preliminary steps were performed to power−down the RDA and RPG (DoD sites) equipment to prevent any possible equipment damage.

WARNING

Wear ear protection during test. Hearing loss can occur from prolonged exposure to high noise.

8. Set the Manual Discharge Station Switch UD7A6 to **ON**. The following events should occur:

   a. The Main PDP UD7A2 main circuit breaker will trip removing all power from the equipment powered by the Main PDP such as the lights and air conditioner/ECU(s) in both the RDA and TPMS shelters.

   b. Contactor UD7S6 will trip removing power to the RDA Secondary PDP.

   c. The alarm horn will sound and exterior light will flash.

9. Set the Manual Discharge Station Switch UD7A6 to **OFF**.

10. On the Fire Detection System Control Panel UD7A5A1, press **Reset** on the keypad.

11. Reset the Main PDP main circuit breaker. Ensure the TPMS power was restored and the ECU(s) is/are operating.

12. Unlatch the RDA shelter door and close it.

13. Perform the applicable RDA, RPG, and RBDDS equipment startup procedures per paragraph 3−5.5.

3−5.6.6 Surge Suppressor UD7A11 Removal/Replacement.

NOTE

The new replacement Surge Suppressor Assembly UD7A11 may not have a hole punched in the housing for the wire entry from the Secondary Power Distribution Panel UD7A3. A hole will have to be punched through the housing in the same location as the replaced housing in order for it to mate up with the conduit connected to it. An alternate method of replacement is to remove the components from the new assembly and reinstall them in the assembly housing already mounted on the wall. However, this alternate method may be just as complicated trying to handle the back plate with the three modules, the resistor circuit board, and unsoldering the neon lamp assemblies without damaging some components or introducing a wiring problem. It is recommended the entire assembly be replaced.

This procedure requires two technicians or experienced licensed electricians who should have all the proper tools.

3−5.6.6.1 Equipment and Tools Required.

1. Screwdriver set, flat−tip
2. Socket wrench set
3. Multimeter
4. Sargent and Greenlee chassis punch (if entire box is to be replaced)
5. Channel lock pliers
6. Step ladder, 6−foot

3−5.6.6.2 Initial Conditions/Preliminary Setup.

CAUTION

This procedure will turn off the power to the Secondary Power Distribution Panel UD7A3 which will remove RDA/RPG equipment power. Ensure the RDA and RPG equipment are properly shutdown.

1. Perform the applicable RDA, RPG, and RBDDS equipment shutdown procedures per paragraph 3−5.4.
2. At the CEC Coil Control Box UD7TPS1, set the circuit breaker to **OFF**. This opens the contactor and removes AC power to the Secondary PDP and the Surge Suppressor.

NOTE

The following step is an additional safety precaution that will remove AC power from the input to the Contactor UD7S6.

3. In the TPMS shelter, perform the following applicable step depending on your TPMS configuration:

   a. Sites with disconnect switches: set the Output Disconnect Switch UD61A5S3 to **OFF** and lock/tag it out.

   b. Sites with a Maintenance Bypass Module: set the Unit Output Breaker (UOB) UD64CB3 (middle breaker) to **OFF** and lock/tag it out.

3−5.6.6.3 Removal/Replacement Procedure.

WARNING

Failure to perform the preliminary setup can cause damage to equipment and serious injury or **DEATH**.

NOTE

The replacement surge suppressor may be a different color (gray or beige) and may have a different door locking mechanism.

1. At the Surge Suppressor UD7A11, loosen the two screws that secure the door catches to the door or rotate the single door latch screw using a flat−tip screwdriver.

2. Open the surge suppressor door.

3. Using a multimeter, verify there is no AC voltage between the phase lugs or from neutral to each phase lug.

4. Tag and loosen the four lug screws securing the three phase wires and neutral wire.

5. Pull the wires from the lugs.

6. Remove the ground wire nut and washer using the a socket wrench and remove the ground wire from the stud.

7. Using channel locking pliers, loosen and remove the plastic outer conduit nut(s) and set aside.

8. Using channel locking pliers, loosen and remove the conduit locking nut(s) and set aside.

9. While supporting the surge suppressor, remove the four mounting bolts or nuts that secures the surge suppressor to the wall using the proper socket/wrench. Remove and set the surge suppressor aside. The box weighs approximately 25 pounds.

10. Open the door of the new surge suppressor and mark the location of the conduit connection point (punched hole) using measurements taken from the old surge suppressor. This is critical so it will mate with the existing conduit.

11. Using a hole punch, punch a hole in the new housing of the same diameter and in the exact location as in the replaced box. It may be necessary to remove the inner component mounting plate to use the hole punch.

12. Remove the plastic inserts from the four corner mounting holes, if installed.

13. While one technician holds the surge suppressor near its mounting location, have second technician feed the five wires through the wire entry hole(s).

14. Mount the new surge suppressor to the wall and secure it with the bolts or nuts removed in step 9. Ensure the hole in the housing mates up with the conduit.

15. Install the conduit locking nut(s) and tighten with channel locking pliers.

16. Install the conduit plastic outer nut(s) and tighten with channel locking pliers.

17. Insert each of the three phase wires and neutral wire into the lugs as removed in step 4 and tighten the lug screws. The A−phase wire should be black. The B−phase wire should be red or taped red. The C−phase wire should be blue or taped blue. The neutral wire should be white or taped white.

18. Attach the ground wire (ground wire should be green or taped green) to the ground stud and install washer and nut and tighten.

19. Close the door of the surge suppressor and secure door with the door catches and tighten the screws or rotate single door locking screw.

20. Restore AC power to the surge suppressor by performing the following steps:

    a. In the TPMS shelter, perform the following applicable step depending on your TPMS configuration:

        1) Sites with disconnect switches: remove lockout/tagout and set the Output Disconnect Switch UD61A5S3 to **ON**.

        2) Sites with a Maintenance Bypass Module: remove lockout/tagout and set the Unit Output Breaker (UOB) UD64CB3 (middle breaker) to **ON**.

    b. At the CEC Coil Control Box UD7TPS1, set the circuit breaker to **ON**.

21. On the surge suppressor door, ensure all three lights are lit.

22. Perform the applicable RDA, RPG, and RBDDS equipment startup procedures per paragraph 3−5.5.

3−5.6.7 Protector Module, Surge Suppressor UD7A11A1 Removal/Replacement.

The procedure requires two technicians.

3−5.6.7.1 Equipment and Tools Required.

1. Screwdriver set, flat−tip
2. Screwdriver set, Phillips−tip
3. Socket wrench or nut driver set, 1/4” drive
4. Multimeter
5. Step ladder, 6−foot

3−5.6.7.2 Initial Conditions/Preliminary Setup.

CAUTION

This procedure will turn off the power to the Secondary Power Distribution Panel UD7A3 which will remove RDA/RPG equipment power. Ensure the RDA and RPG equipment are properly shutdown.

1. Perform the applicable RDA, RPG, and RBDDS equipment shutdown procedures per paragraph 3−5.4.
2. At the CEC Coil Control Box UD7TPS1, set the circuit breaker to **OFF**. This opens the contactor and removes AC power to the Secondary PDP and Surge Suppressor.

NOTE

The following step is an additional safety precaution that will remove AC power from the input to the Contactor UD7S6.

3. In the TPMS shelter, perform the following applicable step depending on your TPMS configuration:
   a. Sites with disconnect switches: set the Output Disconnect Switch UD61A5S3 to **OFF** and lock/tag it out.
   b. Sites with a Maintenance Bypass Module: set the Unit Output Breaker (UOB) UD64CB3 (middle breaker) to **OFF** and lock/tag it out.

3−5.6.7.3 Removal/Replacement Procedure.

WARNING

Failure to perform the preliminary setup can cause damage to equipment and serious injury or **DEATH**.

1. At the Surge Suppressor UD7A11, loosen the two screws that secure the door catches to the door or rotate the single door latch screw using a flat−tip screwdriver.
2. Open the surge suppressor door.
3. Using a multimeter, verify there is no AC voltage between the phase lugs or from neutral to each phase lug.
4. Tag the wires and remove the two module stud nuts and washers using the proper socket wrench or nut driver. Remove the wires from the studs.
5. While holding the protector module in place, remove the two screws securing the protector module to the surge suppressor back plate with the proper screwdriver. Set module aside.
6. While holding the new protector module in place, secure the protector module to the back plate with the two screws remove in previous step.
7. Attach the wires to the protector module studs as tagged and secure with the nuts and washers and tighten with socket wrench or nut driver. Remove tags.
8. Close the door of the surge suppressor and secure door with the door catches and tighten the screws or rotate single door locking screw.
9. Restore AC power to the surge suppressor by performing the following steps:
   a. In the TPMS shelter, perform the following applicable step depending on your TPMS configuration:
      1) Sites with disconnect switches: remove lockout/tagout and set the Output Disconnect Switch UD61A5S3 to **ON**.
      2) Sites with a Maintenance Bypass Module: remove lockout/tagout and set the Unit Output Breaker (UOB) UD64CB3 (middle breaker) to **ON**.
   b. At the CEC Coil Control Box UD7TPS1, set the circuit breaker to **ON**.
10. On the surge suppressor door, ensure all three lights are lit.
11. Perform the applicable RDA, RPG, and RBDDS equipment startup procedures per paragraph 3−5.5.

3−5.6.8 Air Conditioner Clogged Filter Indicator UD7A14 and A15 Removal/Replacement.

Two technicians are required for this procedure.

3−5.6.8.1 Equipment and Tools Required.

1. Screwdriver set, flat−tip
2. Screwdriver set, Phillips−tip

3−5.6.8.2 Initial Conditions/Preliminary Setup.

1. Obtain control from the MSCF and place the system in standby by performing RDA equipment shutdown procedures per paragraph 3−5.4, steps 1 through 2c.

2. On the RDA Maintenance Panel UD5A2, set the DAU POWER switch to **OFF**.

3−5.6.8.3 Removal/Replacement Procedure.

WARNING

Failure to perform the preliminary setup can cause damage to equipment and serious injury or **DEATH**.

1. Loosen the two screws securing the junction box cover plate to the junction box. The clogged filter indicator is mounted to the cover plate.

NOTE

There is a suction hose attached to the backside of the clogged filter indicator that extends through the wall to the air conditioner filter. The length of this suction hose will depend on how far the cover plate can be removed from the junction box.

2. Remove the junction box cover plate, with the clogged filter indicator attached, from the junction box.

3. Remove the suction hose from the backside of the clogged filter indicator. This may require the hose to be pried off with a flat−tip screwdriver. Set the hose aside.

4. Remove the two screws securing the clogged filter indicator to the cover plate.

5. Carefully pull the clogged filter indicator housing away from the cover plate to gain access to the screws securing the wires on the backside.

6. Tag and remove the two wires attached to the backside of the housing.

7. Untag and attach the two wires to the backside of the new housing.

8. Carefully slide the cover plate towards the clogged filter indicator housing and pull the wires through the cover plate.

9. Align the clogged filter indicator housing with the holes in the cover plate and push the housing through the hole openings. The suction hose port flange should be on the top.

10. Secure the clogged filter indicator housing to the cover plate with the two screws removed in step 4.

11. Attach the suction hose to the clogged filter indicator flange protruding through the backside of the cover plate.

12. While holding the cover plate with clogged filter indicator attached, feed the suction hose through the hole in the junction box and wall unit it meets with the air conditioner filter. Ensure the hose is not pinched when the cover plate is mounted to the junction box.

13. Mount the cover plate with clogged filter indicator on the two junction box screws and tighten.

14. On the RDA Maintenance Panel UD5A2, set the DAU POWER switch to **ON**.

15. Perform the appropriate steps of the clogged filter indicator adjustment per paragraph 3−6.4.

16. Perform an operational check per Table 3−14, steps 1 through 3.

17. Restore RDA control to the MSCF. At the RDA Applications Terminal, enter the following:

    a. **ARCH<Tab>E<Enter>** to turn on the archive unit and wait until the Archive II status indicates `LOADED`, if applicable.

    b. **OPER<Enter>** and verify the status changes to `OPER`.

    c. **ENRC<Enter>** to enable remote control.

3−5.6.9 Transmitter Clogged Filter Indicator UD7A16 Removal/Replacement.

Two technicians are required for this procedure.

3−5.6.9.1 Equipment and Tools Required.

1. Screwdriver set, flat−tip

2. Screwdriver set, Phillips−tip

3−5.6.9.2 Initial Conditions/Preliminary Setup.

1. Obtain control from the MSCF and place the system in standby by performing RDA equipment shutdown procedures per paragraph 3−5.4, steps 1 through 2c.

2. On the RDA Maintenance Panel UD5A2, set the DAU POWER switch to **OFF**.

3−5.6.9.3 Removal/Replacement Procedure.

WARNING

Failure to perform the preliminary setup can cause damage to equipment and serious injury or **DEATH**.

1. Loosen the two screws securing the junction box cover plate to the junction box. The clogged filter indicator is mounted to the cover plate.

NOTE

There is a suction hose attached to the backside of the clogged filter indicator that extends through the junction box into the transmitter air duct.

2. Remove the junction box cover plate, with the clogged filter indicator attached, from the junction box.
3. Remove the suction hose from the backside of the clogged filter indicator. This may require the hose to be pried off with a flat−tip screwdriver. Set the hose aside.
4. Remove the two screws securing the clogged filter indicator to the cover plate.
5. Carefully pull the clogged filter indicator housing away from the cover plate to gain access to the screws securing the wires on the backside.
6. Tag and remove the two wires attached to the backside of the housing.
7. Untag and attach the two wires to the backside of the new housing.
8. Carefully slide the cover plate towards the clogged filter indicator housing and pull the wires through the cover plate.
9. Align the clogged filter indicator housing with the holes in the cover plate and push the housing through the hole openings. The suction hose port flange should be on the top.
10. Secure the clogged filter indicator housing to the cover plate with the two screws removed in step 4.
11. Attach the suction hose to the clogged filter indicator flange protruding through the backside of the cover plate.
12. While holding the cover plate with clogged filter indicator attached, feed the suction hose through the hole in the junction box and transmitter air duct. Ensure the hose is not pinched when the cover plate is mounted to the junction box.
13. Mount the cover plate with clogged filter indicator on the two junction box screws and tighten.
14. On the RDA Maintenance Panel UD5A2, set the DAU POWER switch to **ON**.
15. Perform the appropriate steps of the clogged filter indicator adjustment per paragraph 3−6.4.
16. Perform an operational check per Table 3−14, steps 4 and 5.
17. Restore RDA control to the MSCF. At the RDA Applications Terminal, enter the following:

a. **ARCH <Tab> E<Enter>** to turn on the archive unit and wait until the Archive II status indicates `LOADED`, if applicable.

b. **OPER <Enter>** and verify the status changes to `OPER`.

c. **ENRC <Enter>** to enable remote control.

3−5.6.10 Photoelectric UD7A17 and Ionization UD7A23 Smoke Detector Removal/Replacement.

This procedure requires two technicians.

3−5.6.10.1 Equipment and Tools Required.

1. Screwdriver set, flat−tip
2. Allen key set
3. Pliers, diagonal cutters
4. Flashlight
5. Ladder, 6 ft.
6. Hearing Protection

3−5.6.10.2 Initial Conditions/Preliminary Setup.

1. Perform the applicable RDA, RPG, and RBDDS equipment shutdown procedures per paragraph 3−5.4.

NOTE

As part of the TPMS installation, the circuit breaker for the Fire Detection Panel should have been moved from the Main PDP CB20 position to the Secondary PDP CB13 position. However, if CB13 was occupied, the electrician may have placed it elsewhere in the Secondary PDP. For configuration control, the breaker should be at CB13.

2. At the Secondary PDP UD7A3, set the Fire Suppression/Detection Panel circuit breaker CB13 to **OFF**.

3−5.6.10.3 Removal/Replacement Procedure.

WARNING

Failure to perform the preliminary setup can cause damage to equipment and serious injury or **DEATH**.

NOTE

The use of a ladder is required to complete some of the following steps.

1. Remove detector head by removing Allen head locking pin using appropriate Allen key.
2. Tag and disconnect wires from detector base.
3. Remove screws securing detector base to ceiling.
4. Obtain new detector head and base.
5. Run wires through detector base and secure base to ceiling.
6. Using tags as guides, connect wires to proper screws.
7. Connect detector head to base and secure with Allen head locking pin using appropriate Allen key.
8. Restore AC power to the Fire Detection Panel UD7A5. At the Secondary PDP UD7A3, set the Fire Suppression/Detection Panel circuit breaker CB13 to **ON**.

CAUTION

The following step will test the new smoke detector and trip the main circuit breaker in the Main PDP and shutdown all auxiliary equipment powered by the Main PDP, to include the TPMS shelter. It will also trip the Contactor coil and remove all power from the Secondary PDP. Ensure the preliminary steps were performed to power−down the RDA and RPG (DoD sites) equipment to prevent any possible equipment damage.

9. To test new smoke detector, proceed to paragraph 3−5.6.4.3, step 14 and perform the operational test of the Fire Detection Panel UD7A5.
10. For Photoelectric UD7A17 and Ionization UD7A23 Smoke Detectors, perform functional test per the PMI Work Cards, Card 2−029.
11. Perform the applicable RDA, RPG, and RBDDS equipment startup procedures per paragraph 3−5.5.

3−5.6.11 Air Conditioners Discharge Air Temperature Sensors UD7A18, UD7A19 and Transmitter Exhaust Air Temperature Sensor UD7A21 Removal/Replacement.

This procedure requires two technicians. This procedure consists of two parts. Part 1 is for UD7A18 and UD7A19. Part 2 is for UD7A21. For component location refer to NWS EHB 6−501, IPB Manual.

3−5.6.11.1 Equipment and Tools Required.

1. Wrench set, combination
2. Screwdriver set, alignment, adjustable

3. Screwdriver set, flat−tip
4. Screwdriver set, miniature
5. Pliers set
6. Ladder, 6 ft.

3−5.6.11.2 Initial Conditions/Preliminary Setup.

1. Obtain control from the MSCF and place the system in standby by performing RDA equipment shutdown procedures per paragraph 3−5.4, steps 1 through 2c.
2. On the RDA Maintenance Panel UD5A2, set the DAU POWER switch to **OFF**.

3−5.6.11.3 Removal/Replacement Procedure.

WARNING

Failure to perform the preliminary setup can cause damage to equipment and serious injury or **DEATH**.

NOTE

The use of a ladder may be required to complete some of the following steps.

3−5.6.11.3.1 Part 1 − Air Conditioners Discharge Air Temperature Sensors UD7A18 and UD7A19.

NOTE

The sensor junction may be mounted on a bracket which is mounted to the wall or the junction box may be mounted directly to the wall.

1. Remove the sensor junction box from its bracket by removing its holding nuts and associated washers using the proper wrench.
2. Remove the sensor junction box cover plate using the proper screwdriver. The sensor is mounted to the inside of the cover plate.
3. Disconnect the red and black signal leads from the (+) and (–) terminals, respectively, of the sensor−mate assembly using the proper screwdriver.
4. Remove the sensor junction box from the conduit by removing its holding nut using the pliers.
5. Insert the signal lead into the new sensor junction box.
6. Install the new sensor junction box to the conduit by inserting and tightening its holding nut using the pliers.

7. Connect the red and black signal leads to the (+) and (–) terminals, respectively, of the sensor−mate assembly using the proper screwdriver.

8. On the RDA Maintenance Panel, set the DAU POWER switch to **ON**.

9. Perform zero and span adjustment. (Refer to paragraphs 3−6.2.3 and 3−6.3, RTD Temperature Sensor Alignment).

10. Install the sensor junction box cover plate to the sensor junction box using the proper screwdriver.

11. Mount the sensor junction box to its bracket with the mounting hardware removed in step 1.

12. Refer to Table 3−12 to verify sensor operation.

13. At the RDA Maintenance Terminal, Applications screen Main Menu command and parameters lines, enter the following to bring the system to an operational state and return control to the MSCF:

    a. **ARCH<Tab>D<Enter>** to turn on the Archive II unit and wait until the status indicates `LOADED`, if applicable.

    b. **OPER<Enter>** and verify the status line changes to `OPER`.

    c. **ENRC<Enter>** to enable remote control.

3−5.6.11.3.2 Part 2 − Transmitter Exhaust Air Temperature Sensor UD7A21.

WARNING

Failure to perform the preliminary setup can cause damage to equipment and serious injury or **DEATH**.

1. Remove the sensor junction box cover plate from the sensor junction box using the proper screwdriver. The sensor is mounted to the inside of the cover plate.

2. Disconnect the red and black signal leads from the (+) and (–) terminals, respectively, of the sensor−mate assembly using the proper screwdriver.

3. Remove the cable conduit from the sensor junction box by removing its holding nut using the pliers.

4. Remove the sensor junction box from air duct by removing two screws using the proper screwdriver.

5. Install new sensor junction box on air duct and secure with two screws.

6. Insert the signal lead into the new sensor junction box.

7. Install the new sensor junction box to the cable conduit by inserting and tightening its holding nut using the pliers.

8. Connect the red and black signal leads to the (+) and (–) terminals, respectively, of the sensor−mate assembly using the proper screwdriver.

9. On the RDA Maintenance Panel UD5A2, set the DAU POWER switch to **ON**.

10. Perform paragraph 3−6.3, RTD Temperature Sensor alignment.

11. Install the cover plate to the sensor junction box using the proper screwdriver.

12. Refer to Table 3−13 to verify sensor operation.

13. At the RDA Maintenance Terminal, Applications screen Main Menu command and parameters lines, enter the following to bring the system to an operational state and return control to the MSCF:

    a. **ARCH<Tab>E<Enter>** to turn on the Archive II unit and wait until the status indicates `LOADED`, if applicable.

    b. **OPER<Enter>** and verify the status line changes to `OPER`.

    c. **ENRC<Enter>** to enable remote control.

3−5.6.12 Interior (Room) Air Temperature Sensor UD7A20 and UD10A7 Removal/Replacement.

This procedure requires two technicians. For component location refer to NWS EHB 6−501, IPB Manual.

3−5.6.12.1 Equipment and Tools Required.

1. Screwdriver set, alignment
2. Screwdriver set, flat−tip
3. Screwdriver set, miniature
4. Ladder, 6 ft.

3−5.6.12.2 Initial Conditions/Preliminary Setup.

1. Obtain control from the MSCF and place the system in standby by performing RDA equipment shutdown procedures per paragraph 3−5.4, steps 1 through 2c.

2. On the RDA Maintenance Panel UD5A2, set the DAU POWER switch to **OFF**.

3−5.6.12.3 Removal/Replacement Procedure.

WARNING

Failure to perform the preliminary setup can cause damage to equipment and serious injury or **DEATH**.

NOTE

The use of a ladder may be required to complete some of the following steps.

1. Remove two holding screws from interior sensor enclosure using proper screwdriver.
2. Disconnect the red and black signal leads from the (+) and (–) terminals on the sensor RTD using proper screwdriver.
3. Replace old sensor with new interior air temperature sensor.
4. Connect red signal lead to (+) terminal using proper screwdriver.
5. Connect black signal lead to (–) terminal using proper screwdriver.
6. Secure interior sensor enclosure with the two holding screws using proper screwdriver.
7. On the RDA Maintenance Panel UD5A2, set the DAU POWER switch to **ON**.
8. Perform zero and span adjustment. (Refer to paragraphs 3−6.2.3 and 3−6.3, RTD Temperature Sensor Alignment).
9. Refer to Table 3−16 for RDA interior air temperature sensor or Table 3−17 for generator shelter air temperature sensor to verify operation.
10. Restore RDA control to the MSCF. At the RDA Applications Terminal, enter the following:
    a. **ARCH<Tab>E<Enter>** to turn on the archive unit and wait until the Archive II status indicates `LOADED`, if applicable.
    b. **OPER<Enter>** and verify the status changes to `OPER`.
    c. **ENRC<Enter>** to enable remote control.

3−5.6.13 Exterior Air Temperature Sensor UD7A22 Removal/Replacement.

This procedure requires two technicians. For component location refer to the NWS EHB 6−501, IPB Manual.

3−5.6.13.1 Equipment and Tools Required.

1. Screwdriver set, flat−tip
2. Screwdriver set, miniature
3. Ladder, 6 ft.

3−5.6.13.2 Initial Conditions/Preliminary Setup.

1. Obtain control from the MSCF and place the system in standby by performing RDA equipment shutdown procedures per paragraph 3−5.4, steps 1 through 2c.

2. On the RDA Maintenance Panel UD5A2, set the DAU POWER switch to **OFF**.

3−5.6.13.3 Removal/Replacement Procedure.

WARNING

Failure to perform the preliminary setup can cause damage to equipment and serious injury or **DEATH**.

NOTE

The use of a ladder is required to complete some of the following steps.

1. Remove the access cover plate from the sensor junction box using the proper screwdriver.
2. Remove the sensor assembly from sensor junction box.
3. Label and disconnect the red and black signal leads from the (+) and (–) terminals of the sensor assembly using the proper screwdriver.
4. Connect the red and black signal leads to the (+) and (–) terminals of the sensor assembly using the proper screwdriver and remove labels.
5. Insert the new sensor assembly into the sensor junction box.
6. On the RDA Maintenance Panel UD5A2, set the DAU POWER switch to **ON**.
7. Perform zero and span adjustment. (Refer to paragraphs 3−6.2.3 and 3−6.3, RTD Temperature Sensor Alignment).
8. Install the sensor junction box access cover plate to the sensor junction box using the proper screwdriver.
9. Perform an operational check per Table 3−15.
10. Restore RDA control to the MSCF. At the RDA Applications Terminal, enter the following:
    a. **ARCH<Tab>E<Enter>** to turn on the archive unit and wait until the Archive II status indicates `LOADED`, if applicable.
    b. **OPER<Enter>** and verify the status changes to `OPER`.
    c. **ENRC<Enter>** to enable remote control.

3−5.6.14 Evaporator Fan Motor UD7AC1B1 or UD7AC2B1 Removal/Replacement.

This procedure requires two technicians.

3−5.6.14.1 Equipment and Tools Required.

1. Screwdriver set, Phillips−tip
2. Screwdriver set, flat−tip
3. Socket wrench set, 3/8″ driver
4. Wrench set, adjustable
5. Pliers, diagonal cutter
6. Tie−wraps
7. Tie−wrap gun
8. Ladder, 6 ft.

3−5.6.14.2 Initial Conditions/Preliminary Setup.

NOTE

Ensure that the other air conditioner unit is powered−up and running prior to powering down the air conditioner unit to be worked on.

1. On the RDA Main PDP UD7A2, set the power circuit breakers for the AC unit to be worked on to **OFF**. (For AC#1, CB2, 4, and 6; for AC#2, CB12, 14, and 16).
2. Locate AC CB1 as follows:
   a. On model WA60 air conditioners, disconnect bottom access panel using proper socket. Circuit breaker CB1 is located in the lower right corner.
   b. On model WA601/WA602 air conditioners, disconnect circuit breaker access panel on right side of unit using proper socket.
3. Set AC CB1 to **OFF**.

3−5.6.14.3 Removal/Replacement Procedure.

WARNING

Failure to perform the preliminary setup can cause damage to equipment and serious injury or **DEATH**.

NOTE

The use of a ladder will be required to complete some of the following steps.

1. Inside the RDA shelter, remove the inner AC panel using the proper screwdriver.

2. Inside AC, disconnect the five−wire connector which is connected to the AC vent.

CAUTION

Be sure that this connector is disconnected before going any further. Failure to do this before removing the vent will result in unnecessary damage to the equipment.

3. Remove the top access cover using the proper socket.

NOTE

Perform step 4 for model WA60 air conditioner equipped with (hooded) economizer. This will allow access to the evaporator fan motor assembly. For models WA601 or WA602, with or without economizer, and model WA60 without economizer, proceed to step 5.

4. On model WA60 air conditioner with economizer, remove economizer assembly per paragraph 3−5.6.16.

5. On model WA60 air conditioner, ensure bottom access panel has been removed to gain access to wire leads next to circuit breaker. On model WA601 or WA602 air conditioners, remove the terminal board wiring panel on right side of unit using the proper socket.

6. Remove the AC circuit breaker cover panel using the proper socket.

7. Inside the AC unit, cut all tie−wraps which hold the three evaporator fan motor leads (red, black, and yellow) in place using the diagonal cutters.

8. Remove the yellow lead from L3.

9. Remove the black lead from terminal #4 or C connection of the indoor blower relay. The red lead is not connected.

10. Guide the red, black, and yellow leads from the AC circuit breaker panel to the evaporator fan assembly.

11. Remove the two brown leads from the capacitor which is located on the right fan casing.

12. Remove the ground lead from the right fan casing using the proper socket.

13. Remove the two clamps which hold the red, black, and yellow leads to the right fan casing using the proper socket.

14. Remove the four top screws which hold the evaporator fan assembly to the AC unit.

15. Remove the evaporator fan assembly from the AC unit and set it down on an appropriate work area.
16. Loosen the nuts which hold the evaporator fan(s) to the motor shaft using the appropriate adjustable wrench.
17. Remove the four screws from the bracket which hold the two fan casings together using the proper socket.
18. Remove the four nuts, bolts, and washers which hold the fan motor onto the motor mounting bracket using the proper wrenches.
19. Remove the fan casings and fans from the motor shaft.
20. Loosen the two clamps which retain the fan motor to the motor mounting bracket using the proper screwdriver and wrenches.
21. Remove the ground wire from the fan motor using the proper wrench.
22. Set aside the old fan motor to turn in.
23. Connect the ground wire to the new fan motor using the proper wrench.
24. Tighten the two clamps to secure the new fan motor to the motor mounting bracket using the proper screwdriver and proper wrenches.
25. Insert the fan casings and the fans onto the motor shaft.
26. Install the new fan motor onto the motor mounting bracket by inserting and tightening the four nuts, bolts, and washers using the proper wrenches.
27. Connect the ground lead to the right fan casing using the proper socket.
28. Install the bracket which holds the two fan casings together by inserting and tightening the four screws using the proper socket.
29. Tighten the nuts which hold the fans to the motor shaft using the appropriate adjustable wrench.
30. Insert the evaporator fan assembly into the top of the AC unit.
31. Install the four top screws which hold the evaporator fan assembly to the AC unit.
32. Guide the red, black, and yellow leads from the evaporator fan assembly to the AC circuit breaker panel.
33. Install the two clamps which hold the red, black, and yellow leads to the right fan casing using the proper socket.
34. Connect the two brown leads to the capacitor which is located on the right fan casing.

35. Connect the yellow lead to L3.

36. Connect the black lead to terminal #4 or C connection of the blower relay. The red lead is not connected.

37. Using tie−wraps and the tie−wrap gun, secure the red, black, and yellow leads in place.

NOTE

Perform step 38 for model WA60 air conditioner to install economizer. For models WA601 or WA602, with or without economizer, and model WA60 without economizer, proceed to step 39.

38. On model WA60 air conditioner with economizer, install economizer assembly per paragraph 3−5.6.16.

39. For WA601 or WA602 air conditioners, install the access panel for terminal board wiring using the proper socket.

40. Install the AC circuit breaker cover panel using the proper socket.

41. Install the top access cover using the proper socket.

42. For AC WA601 or WA602, set AC CB1 to **ON** and install the circuit breaker access cover using the proper socket.

43. For AC WA60, set AC CB1 to **ON** and install bottom access panel using the proper socket.

44. Inside AC, connect the five−wire connector which is connected to the AC vent. Ensure the connector is aligned correctly.

45. Install the inner AC panel using the proper screwdriver.

46. On the RDA Main PDP, set the power circuit breakers for the AC unit just worked on to **ON**. (For AC#1, CB2, 4, and 6; for AC#2, CB12, 14, and 16).

3−5.6.15 Condenser Fan Motor UD7AC1B2 or UD7AC2B2 Removal/Replacement.

This procedure requires two technicians.

3−5.6.15.1 Equipment and Tools Required.

1. Socket wrench set, 3/8″ drive

2. Wrench set, adjustable

3. Screwdriver set, Phillips−tip

4. Pliers, diagonal cutters

5. Tie−wraps
6. Tie−wrap gun
7. Ladder, 6 ft.

3−5.6.15.2 Initial Conditions/Preliminary Setup.

NOTE

Ensure that the other air conditioner is powered−up and running prior to powering down the air conditioner unit to be worked on.

1. On the RDA Main PDP UD7A2, set the power circuit breakers for the AC unit to be worked on to **OFF**. (For AC#1, CB2, 4, and 6; for AC#2, CB12, 14, and 16.)
2. Locate AC CB1 as follows:
   a. On model WA60 air conditioners, disconnect bottom access panel. Circuit breaker CB1 is located in the lower right corner.
   b. On model WA601 or WA602 air conditioners, disconnect circuit breaker access panel on right side of unit.
3. Set AC CB1 to **OFF**.

3−5.6.15.3 Removal/Replacement Procedure.

WARNING

Failure to perform the preliminary setup can cause damage to equipment and serious injury or **DEATH**.

NOTE

The use of a ladder will be required to complete some of the following steps.

1. Remove the lower outer AC panel to access the condenser fan motor using the proper socket.
2. For WA60 AC, remove the rear right middle circuit breaker cover panel using the proper socket.
3. For WA601 or WA602 AC, on right side, remove the terminal boards wiring access panel.
4. Inside the circuit panel, remove the yellow and brown leads from the capacitors. (The yellow and brown leads are connected to the condenser fan motor).
5. Inside the circuit panel, remove the black lead from T2. (The black lead is also connected to the condenser fan motor.)

6. In the circuit panel, use the diagonal cutters to cut the tie−wraps which secure the brown, black, and yellow leads.
7. Inside the RDA shelter, remove the AC panel using the proper screwdriver.
8. Using the diagonal cutters, cut the tie−wraps which secure the brown, black, and yellow leads.
9. Using the pliers, remove the black snap bushing which holds the brown, black, and yellow leads to the chassis of the AC unit.
10. Route the brown, black, and yellow leads to the condenser fan motor assembly.
11. On the condenser fan motor assembly, remove the ground wire by removing its holding nut using the appropriate adjustable wrench.
12. Remove the bolts and washers which hold the condenser fan motor support in place using the proper socket.
13. Remove the condenser fan motor along with the support that is attached to it from the AC unit.
14. Remove the nut, bolt, and washer which hold the support to the condenser fan motor using the proper socket and the appropriate adjustable wrench.
15. Install the support to the new condenser fan motor by inserting and tightening the nut, bolt, and washer using the proper socket and the appropriate adjustable wrench.
16. Install the new condenser motor fan along with its support by inserting and tightening its holding bolts and washers using the proper socket.
17. On the condenser fan motor assembly, connect the ground wire in place by inserting and tightening its holding nut using the appropriate adjustable wrench.
18. Route the brown, black, and yellow leads from the condenser fan motor through the chassis to the inside of the AC unit.
19. Inside the RDA shelter, install the black snap bushing around the brown, black, and yellow leads.
20. Using the pliers, install the black snap bushing to the chassis.
21. Route the brown, black, and yellow leads to the circuit panel.
22. Using tie−wraps and the tie−wrap gun, secure the brown, black, and yellow leads inside the AC unit.
23. Install the lower AC panel using the proper socket.
24. Inside the circuit panel, connect the yellow and brown leads to the capacitor.

25. Inside the circuit panel, connect the black lead to T2.
26. Using tie−wraps and the tie−wrap gun, secure the brown, black, and yellow leads in place.
27. For the WA60 AC, install the rear right middle circuit breaker cover panel using the proper socket.
28. For WA601 or WA602 AC, install the right side access panel on the AC.
29. Set air conditioner CB1 to **ON** and secure access cover using proper socket.
30. At the RDA Main PDP, set the power circuit breakers for the AC unit just worked on to **ON**. (For AC#1, CB2, 4, and 6; for AC#2, CB12, 14, and 16.)

3−5.6.16 Economizer ECW−4A (P/O UD7AC2 Model WA60) Removal/Replacement.

This procedure requires one technician.

3−5.6.16.1 Equipment and Tools Required.

1. Socket wrench set, 3/8″ drive
2. Wrench set, adjustable
3. Screwdriver set, Phillips−tip
4. Screwdriver set, flat−tip
5. Tie−wraps
6. Tie−wrap gun
7. Ladder, 6 ft.

3−5.6.16.2 Initial Conditions/Preliminary Setup.

NOTE

Ensure that the other air conditioner unit is powered−up and running prior to powering down the air conditioner unit to be worked on.

1. On the RDA Main PDP UD7A2, set the power circuit breakers for AC#2 unit to **OFF** (CB12, 14, and 16).
2. Disconnect bottom access panel.
3. Set AC circuit breaker CB1, which is located in the lower right corner, to **OFF**.

3−5.6.16.3 Removal/Replacement Procedure.

WARNING

Failure to perform the preliminary setup can cause damage to equipment and serious injury or **DEATH**.

NOTE

The use of a ladder will be required to complete some of the following steps.

1. Remove both the bottom and top access panels.
2. Remove and save the existing unit return air filter.
3. Open the control panel to allow access to the unit low voltage terminal block.
4. Locate economizer wire nut leads Y1 and Y2 between the outdoor thermostat and low voltage terminal board. Tag leads and remove the wire nut.
5. Tag and remove economizer terminal leads at the low voltage terminal board contacts C and G.
6. If outdoor thermostat is to be replaced, tag and remove lead at the low voltage terminal board contact Y.
7. Cut any ties on the wires between the economizer and the low voltage terminal board.
8. Pull all economizer and outdoor thermostat wires through the bushings in the control panel.
9. Remove the blower access panel at the top of the unit by removing the sheet metal screws.
10. Remove the sheet metal screws securing the economizer to the unit side flanges. Disconnect the male lead from the economizer that goes to the female harness in the unit. Remove the economizer assembly from the AC unit. Take care not to damage the wiring with the R/A blade.
11. Install new economizer assembly by inserting the return air damper into the unit with the side angle on top of the filter rack. Take care not to damage the wiring with the R/A blade. Connect the male lead from the economizer to the female harness. Push the assembly home into the unit and secure through the side flanges with the sheet metal screws.

NOTE

Perform step 12 only if replacement of the outdoor thermostat is required; otherwise go to step 13.

12. Replace the outdoor thermostat as follows:

NOTE

Depending on the AC unit, the outdoor thermostat is either mounted on the side of the control panel or on the right side of the blower shelf, respectively.

a. Ensure the thermostat wires have been disconnected.

b. Remove sheet metal screws securing the thermostat to the unit.

c. Carefully pull the sensor bulb through the condenser partition and remove the thermostat.

d. Obtain the replacement thermostat.

CAUTION

Do not dent or deform the sensing bulb of this control. A dent or deformation will change the calibration and cause the control to cycle at a temperature different from the thermostat setting.

e. Remove any packing and shipping pads from the thermostat.

f. Install new thermostat to the air conditioner using the mounting screws supplied.

g. Carefully route the sensor bulb through the condenser partition.

h. Set thermostat indication to 0°F.

i. Route all thermostat wires through bushing in the control panel.

13. Route economizer low voltage wires through bushing in control panel.

14. If outdoor thermostat was replaced, connect tagged lead to the low voltage terminal board contact Y.

15. Connect tagged economizer leads to the low voltage terminal boards contacts C and G.

16. Connect tagged economizer wires Y1 and Y2 to their respective leads at the outdoor thermostat and the low voltage terminal board, using the wire nuts removed earlier.

17. If required, tie economizer wires along the AC unit as previously removed.

18. Install the blower access panel at the top of the unit by securing with the sheet metal screws.

19. Close cover on the control panel.

20. Install the air conditioner (return) filter.

NOTE

Do not install the bottom and top access panels until the completion of the operational check in step 23.

21. On the AC unit, set the AC circuit breaker CB1 to **ON**.
22. On the RDA Main PDP UD7A2, set the power circuit breakers for the AC#2 to **ON** (CB12, 14, and 16).
23. Perform operational check per paragraph 3−2.3.

3−5.6.17 Economizer EIFM−5A (P/O UD7AC2 Model WA601 or WA602) Removal/Replacement.

This procedure requires one technician.

3−5.6.17.1 Equipment and Tools Required.

1. Socket wrench set, 3/8″ drive
2. Wrench set, adjustable
3. Screwdriver set, Phillips−tip
4. Screwdriver set, flat−tip
5. Tie−wraps
6. Tie−wrap gun
7. Ladder, 6 ft.

3−5.6.17.2 Initial Conditions/Preliminary Setup.

NOTE

Ensure that the other air conditioner unit is powered−up and running prior to powering down the air conditioner unit to be worked on.

1. On the RDA Main PDP UD7A2, set the power circuit breakers for AC#2 to **OFF** (CB12, 14, and 16).
2. Remove circuit breaker access panel on right side of unit using appropriate socket and set AC #2 circuit breaker CB1 to **OFF**.

3−5.6.17.3 Removal/Replacement Procedure.

WARNING

Failure to perform the preliminary setup can cause damage to equipment and serious injury or **DEATH**.

NOTE

The use of a ladder will be required to complete some of the following steps.

1. Remove both bottom and top access panels.
2. Remove mist filter from unit.
3. Remove air conditioner (return) filter.
4. Remove the access panel for terminal board wiring on the right side of unit using proper socket.
5. Open cover on control panel to gain access to low voltage terminal board.
6. Locate economizer wire nut leads Y, Y1, and Y2 between outdoor thermostat and low voltage terminal board. Tag leads and remove wire nuts.
7. Tag and remove economizer terminal leads at low voltage terminal board contacts C and G.
8. If outdoor thermostat is to be replaced, tag and remove lead at low voltage terminal board contact Y.
9. Cut any ties on wires between economizer and low voltage terminal board.
10. Pull all economizer and outdoor thermostat wires through bushing in control panel.
11. Move economizer to far left side of shelf to clear filter bracket and pull out of air conditioner.
12. Install replacement economizer into air conditioner at far left side to clear filter bracket and slide to right until tight against the control panel. Position front lip of economizer on top of front grill and condenser partition to ensure proper drainage.

NOTE

Perform step 13 only if replacement of outdoor thermostat is required; otherwise, go to step 14.

13. Replace outdoor thermostat as follows:

NOTE

Depending on the AC unit, the outdoor thermostat is either mounted on the side of the control panel or on the right side of the blower shelf, respectively.

a. Ensure thermostat wires have been disconnected.

b. Remove screws securing thermostat to unit.

c. Carefully pull the sensor bulb through the condenser partition and remove thermostat.

d. Obtain replacement thermostat.

CAUTION

Do not dent or deform the sensing bulb of this control. A dent or deformation will change the calibration and cause the control to cycle at a temperature different from the setting.

e. Remove any packing and shipping pads from thermostat.

f. Install new thermostat to air conditioner using mounting screws supplied.

g. Carefully route sensor bulb through condenser partition.

h. Set thermostat indication to 0°F.

i. Route all thermostat wires through bushing in control panel.

14. Route economizer low voltage wires through bushing in control panel.

15. If outdoor thermostat was replaced, connect tagged lead to low voltage terminal board contact Y.

16. Connect tagged economizer leads to low voltage terminals board contacts C and G.

17. Connect tagged economizer wires Y, Y1, and Y2 to respective leads at outdoor thermostat and low voltage terminal board using wire nuts.

18. If required, tie economizer wires along AC unit as previously removed.

19. Close cover on control panel.

20. Install the access panel on the right side of the AC unit using proper socket.

21. Install the air conditioner (return) filter.

NOTE

Do not install the mist filter, bottom and top access panels until completion of the operational check in step 25.

22. On AC#2, set AC circuit breaker CB1 to **ON**.

23. On the RDA Main PDP UD7A2, set the power circuit breakers for AC#2 to **ON** (CB12, 14, and 16).

24. Install circuit breaker access panel on right side of unit using appropriate socket.

25. Perform operational check per paragraph 3−2.3.

26. Install mist filter and the bottom and top access panels.

3−5.6.18 Alarm Strobe Light UD7DS1 Removal/Replacement.

One technician is required for this procedure.

3−5.6.18.1 Equipment and Tools Required.

1. Screwdriver set, flat−tip
2. Pliers, diagonal cutters
3. Ladder, 6 ft.
4. Hearing Protection

3−5.6.18.2 Initial Conditions/Preliminary Setup.

1. Perform the applicable RDA, RPG, and RBDDS equipment shutdown procedures per paragraph 3−5.4.

NOTE

As part of the TPMS installation, the circuit breaker for the Fire Detection Panel should have been moved from the Main PDP CB20 position to the Secondary PDP CB13 position. However, if CB13 was occupied, the electrician may have placed it elsewhere in the Secondary PDP. For configuration control, the breaker should be at CB13.

2. At the Secondary PDP UD7A3, set the Fire Suppression/Detection Panel circuit breaker CB13 to **OFF**.

3−5.6.18.3 Removal/Replacement Procedure.

WARNING

Failure to perform the preliminary setup can cause damage to equipment and serious injury or **DEATH**.

NOTE

The use of a ladder is required to complete some of the following steps.

1. Remove cover from light fixture.
2. Remove four screws securing light fixture to wall.
3. Tag and disconnect wires from fixture.
4. Obtain new light fixture and remove cover.
5. Using tags as guides, connect wires to new fixture.

6. Secure fixture to wall with four screws previously removed.

7. Replace fixture cover.

8. Restore AC power to the Fire Detection Panel UD7A5. At the Secondary PDP UD7A3, set the Fire Suppression/Detection Panel circuit breaker CB13 to **ON**.

CAUTION

The following step will test the strobe light and trip the main circuit breaker in the Main PDP and shutdown all auxiliary equipment powered by the Main PDP, to include the TPMS shelter. It will also trip the Contactor coil and remove all power from the Secondary PDP. Ensure the preliminary steps were performed to power−down the RDA and RPG (DoD sites) equipment to prevent any possible equipment damage.

9. To test new strobe light, proceed to paragraph 3−5.6.4.3, step 14 and perform the operational test of the Fire Detection Panel UD7A5.

10. Perform the applicable RDA, RPG, and RBDDS equipment startup procedures per paragraph 3−5.5.

3−5.6.19 Exterior Incandescent Light Fixture UD7DS2, UD10DS1, UD13DS1, and UD60A5LF8 through UD60A5LF10 Removal/Replacement.

One technician is required for this procedure.

3−5.6.19.1 Equipment and Tools Required.

1. Screwdriver set, flat−tip

2. Pliers, diagonal cutters

3. Exterior grade caulking

4. Ladder, 6 ft.

3−5.6.19.2 Initial Conditions/Preliminary Setup.

1. Set the light switch on the inside of applicable shelter for the light fixture to be replaced to the **OFF** position. For additional protection, the Interior & Exterior Lights/Lighting power circuit breaker in the following power distribution panels should be turned off as follows:

   - RDA Shelter − at the RDA Main PDP UD7A2, set CB18 to **OFF**.
   - Generator Shelter − at the Main PDP UD10A2, set CB5 to **OFF**.
   - MLOS Shelter − at the Main PDP UD13A1, set CB9 to **OFF**.
   - TPMS Shelter − at the Main PDP UD60A5, set CB11 to **OFF**.

3−5.6.19.3 Removal/Replacement Procedure.

WARNING

Failure to perform the preliminary setup can cause damage to equipment and serious injury or **DEATH**.

NOTE

The use of a ladder is required to complete some of the following steps.

1. Remove the screws securing the cover to the light fixture and pull cover off.
2. Remove the light bulb. Set the bulb, cover, and screws aside.
3. Remove the screw securing the light fixture to the wall and pull light fixture away from wall to gain access to the electrical wires.
4. Tag and disconnect wires to the light fixture.
5. Obtain new light fixture and remove the cover.
6. Using tags as guides, connect wires to the new light fixture.
7. Secure the light fixture to wall using the screw removed in step 3.
8. Install bulb and replace cover. Secure cover with the two screws.
9. If the circuit breaker was turned off, perform the applicable procedure:
   - RDA Shelter − at the RDA Main PDP UD7A2, set CB18 to **ON**.
   - Generator Shelter − at the Main PDP UD10A2, set CB5 to **ON**.
   - MLOS Shelter − at the Main PDP UD13A1, set CB9 to **ON**.
   - TPMS Shelter − at the Main PDP UD60A5, set CB11 to **ON**.
10. Inside the applicable shelter, turn the light switch on and verify the light works.
11. Check the caulking around the fixture. Re−caulk if necessary.

3−5.6.20 Thermostat UD7S3 and S4 (for AC without Economizer) Removal/Replacement.

One technician is required for this procedure.

3−5.6.20.1 Equipment and Tools Required.

1. Screwdriver set, flat−tip
2. Pliers, diagonal cutters

3. Socket wrench set, 3/8″ drive

3−5.6.20.2 Initial Conditions/Preliminary Setup.

NOTE

Ensure that the other AC is powered up and running prior to powering down the AC corresponding to the thermostat to be replaced. Refer to para 3−5.6.21 for Two−Stage Thermostat UD7S4 removal/replacement procedure.

1. Remove access cover on AC to access CB1 using the proper socket.

NOTE

On model WA60 air conditioners, circuit breaker CB1 is located behind the bottom access panel in the lower rear right corner. On model WA601 or WA602 air conditioners, circuit breaker CB1 is located behind the circuit breaker/disconnect access panel on right side of unit.

2. Set AC CB1 to **OFF**.

3. At the RDA Main PDP UD7A2, set circuit breakers for AC to be worked on to **OFF** (CB2, 4, and 6 for AC#1; CB12, 14, and 16 for AC#2).

3−5.6.20.3 Removal/Replacement Procedure.

WARNING

Failure to perform the preliminary setup can cause damage to equipment and serious injury or **DEATH**.

1. Remove cover from thermostat by pulling straight outward.

2. Grasp bronze tab and lift upward to raise hinged cover until bronze clip is exposed which will keep hinged cover in raised position.

3. Tag and disconnect wires from terminal screws.

4. Remove two screws securing thermostat to junction box.

5. Obtain replacement thermostat.

6. Remove cover from thermostat by pulling straight outward. Remove packing and shipping pads for mercury switches.

7. Grasp bronze tab and lift upward to raise hinged cover until bronze clip is exposed which will keep hinged cover in raised position.

8. Pull thermostat wires through opening in center of thermostat.

9. Secure thermostat to junction box using two screws provided, but do not tighten until wires have been connected.

10. Using tags as guides, connect wires to proper terminal screws and push excess wire into junction box.

11. Using the built−in level bubble (if applicable), level thermostat and tighten mounting screws securely.

12. Lower hinged cover until bronze tab snaps in place.

13. Set adjustable heat anticipator to proper setting. Then snap on thermostat cover and set temperature adjust levers at desired settings. Levers are marked C (cooling) and H (heating).

14. At the RDA Main PDP UD7A2, set circuit breakers for AC worked on to **ON** (CB2, 4, and 6 for AC#1; CB12, 14, and 16 for AC#2).

15. Remove access cover from other AC and set CB1 to **OFF**.

16. Set AC CB1 corresponding to replaced thermostat to **ON**.

17. Perform operation check per Table 3−2.

18. On corresponding AC, replace access cover using proper socket. On the other AC, set CB1 ON and replace access cover using proper socket.

3−5.6.21 Two−Stage Thermostat UD7S4 (for AC with Economizer) Removal/Replacement.

This procedure requires one technician.

3−5.6.21.1 Equipment and Tools Required.

1. Screwdriver set, flat−tip

3−5.6.21.2 Initial Conditions/Preliminary Setup.

NOTE

The two−stage thermostat is used with Air Conditioner UD7AC2 when it is equipped with an economizer. AC#1 should be placed in the **ON** condition when performing this procedure.

1. At the RDA Main PDP UD7A2, set circuit breakers CB12, 14, and 16 (AC#2) to **OFF**.

3−5.6.21.3 Removal/Replacement Procedure.

1. Remove old thermostat cover by pulling bottom edge of the cover outward from the base until it snaps free of the base clips.

2. Lift top of cover off the hinge tabs on the base.

3. Remove old thermostat base by loosening two captive screws in the lower corners and pulling base outward and upward to release its mounting tabs from the slots in the top of the sub−base.

4. Remove cover from the replacement thermostat by pulling the bottom edge of the cover outward until it snaps free of the base clips.

5. Carefully remove and discard packing that protects the mercury switches of the thermostat base during shipping.

6. Make sure the spring fingers on rear of base are not bent flat, preventing proper electrical contact with the sub−base.

7. On front of base, set the stage−one (upper) and stage−two heat anticipator controls to .5 and .4, respectively.

8. Position thermostat base so that the two tabs on its top inside edges fit into the corresponding slots in the top of the sub−base.

9. Align two captive screws in the lower corners of the base with the posts on the sub−base. Tighten both screws lightly (just snug).

10. Hang upper edge of the thermostat cover on the base tabs and swing cover downward until its bottom edge engages the cover clips on the base. Snap cover into place.

11. Set up thermostat in accordance with instructions in Table 1−6.

12. At the RDA Main PDP UD7A2, set circuit breakers CB12, 14, and 16 to **ON**.

13. Perform operational check per Table 3−3.

3−5.6.22 Thermostat, Ventilation UD7S5 Removal/Replacement.

This procedure requires one technician.

3−5.6.22.1 Equipment and Tools Required.

1. Screwdriver set, flat−tip

2. Multimeter

3−5.6.22.2 Initial Conditions/Preliminary Setup.

1. Obtain control from the MSCF and place the system in standby by performing RDA equipment shutdown procedures per paragraph 3−5.4, steps 1 through 2c.

2. At the RDA Main PDP UD7A2, set circuit breaker CB22, Transmitter Ventilation, to **OFF**.

3−5.6.22.3 Removal/Replacement Procedure.

WARNING

Failure to perform the preliminary setup can cause damage to equipment and serious injury or **DEATH**.

1. Remove cover from thermostat by loosening screw and pulling off cover.
2. Using multimeter, verify there is no AC voltage on terminal screws.
3. Tag and disconnect wires from terminal screws.
4. Remove screws securing thermostat to junction box.
5. Obtain replacement thermostat.

CAUTION

Do not dent or deform the sensing bulb of this control. A dent or deformation will change the calibration and cause the control to cycle at a temperature lower than the dial setting.

6. Remove cover from thermostat by loosening screw and pulling cover off. Remove any packing and shipping pads.
7. Pull thermostat wires through opening.
8. Using tags as guides, connect wires to proper terminal screws and push excess wire into wall outlet box.
9. At the RDA Main PDP UD7A2, set circuit breaker CB22, Transmitter Ventilation, to **ON**.
10. Perform an operational check per Table 3−4.
11. Restore RDA control to the MSCF. At the RDA Applications Terminal, enter the following:
    a. **ARCH<Tab>E<Enter>** to turn on the archive unit and wait until the Archive II status indicates `LOADED`, if applicable.
    b. **OPER<Enter>** and verify the status changes to `OPER`.
    c. **ENRC<Enter>** to enable remote control.

3−5.6.23 Contactor UD7S6 (RDA Shelter) Removal/Replacement.

This procedure requires two technicians.

3−5.6.23.1 Equipment and Tools Required.

1. Screwdriver set, flat−tip
2. Screwdriver set, Phillips−tip
3. Socket wrench set, 3/8″ drive
4. Socket set, 3/8” drive, hex bit
5. Torque wrench, 30−200 in−lbs, 3/8″ drive
6. Flashlight
7. Multimeter

3−5.6.23.2 Initial Conditions/Preliminary Setup.

1. Perform the applicable RDA, RPG, and RBDDS equipment shutdown procedures per paragraph 3−5.4.
2. At the RDA Secondary PDP UD7A3, set all circuit breakers to **OFF**.

WARNING

The Contactor UD7S6 is fed power from the disconnect switches or circuit breakers in the TPMS shelter. To isolate the TPS system and remove power from the Contactor UD7S6, the TPS must be removed from service before reconfiguring the disconnect switches or circuit breakers, depending on the type of TPMS shelter installed. **At sites with a Type 1, 2, or 4 TPMS**, the TPMS Maintenance Bypass Fused Disconnect UD61A5S2 and the Output Fused Disconnect UD61A5S3 MUST be in the OFF (open) position. **At sites with a Type 5, 6, or 9 TPMS**, the Maintenance Bypass Module UD64 Maintenance Bypass Breaker (MBB) and the Unit Output Breaker (UOB) MUST be in the OFF (open) position. Failure to shutdown the TPS and isolate the TPS system may result in equipment damage or serious injury or **DEATH**.

3. Perform the following steps to remove power from the Contactor UD7S6 as follows:
   a. At the Critical Equipment Contactor (CEC) Coil Control Box UD7TPS1, set the circuit breaker to **OFF**.
   b. Remove the TPS from normal service by performing Table 2−8, steps 1 through 3.
   c. Perform the following applicable step, depending on type of TPMS system installed:

1) At Type 1, 2, or 4 TPMS sites with fused disconnect switches, set the Output Fused Disconnect UD61A5S3 to the **OFF** position and ensure the Maintenance Bypass Fused Disconnect UD61A5S2 is in the OFF position. Install the lockout/tagout devices to prevent these switches from being turned on.

NOTE

The three breakers in the MBM Cabinet may have several names printed on labels/stickers located near the associated breaker. The top breaker is the Maintenance Bypass Breaker MBB. The middle breaker is labeled Unit/UPS Output Breaker (UOB) or Maintenance Isolation Breaker (MIS). The bottom breaker is labeled Unit/UPS Input breaker (UIB) or Bypass Input Breaker 1.

2) At Type 5, 6, or 9 TPMS sites with a Maintenance Bypass Module UD64, set the Unit Output Breaker (UOB) (middle breaker) to the **OFF** position and ensure the Maintenance Bypass Breaker (MBB) (top breaker) is in the **OFF** position. Install the lockout/tagout devices to prevent these switches from being turned on.

3−5.6.23.3 Removal/Replacement Procedure.

WARNING

Failure to perform the preliminary setup can cause damage to equipment and serious injury or **DEATH**.

1. Remove the front cover of the Contactor UD7S6 enclosure by loosening the holding screw at the bottom using the proper screwdriver.
2. Using a digital multimeter, verify there is no AC voltage within the enclosure.
3. Disconnect the two terminal leads from the top of the contactor coil.
4. Tag the six main leads and loosen the lug screws using the 1/4” hex bit socket. Disconnect the three upper main leads.
5. Loosen the ground clamp screw and remove the ground wire from the clamp.
6. Remove the contactor by loosening the upper mounting screw and removing the two lower mounting screws. Lift the contactor up and remove it from the upper mounting screw and the three lower main leads.
7. Replace the upper mounting screw loosely with a new screw that has a captive lock washer.

8. Remove the ground clamp from the old contactor and attach it to the upper−left corner of the new contactor, using a new mounting screw with a captive lock washer. The mounting tab of the clamp should be installed behind the plastic tab attached to the contactor coil assembly.

NOTE

If any mounting screws become lost or broken, replace only with screws that have a captive lock washer. The new mounting screws are longer due to the thickness of the mounting adapter plate, so a shorter screw could be used for the upper mounting screw or for attaching the ground clamp.

9. Remove all six lug screws from the new contactor.

10. Install the new contactor by inserting the three lower main leads into the lower lugs and hanging the contactor on the upper mounting screw. Insert and tighten two new mounting screws with captive lock washers in the lower mounting holes. Tighten the upper mounting screw.

11. Insert the ground wire into the ground clamp and tighten the ground clamp screw.

12. Connect the two terminal leads to the top of the contactor coil.

13. Insert the upper main leads into the lugs. Untag all six main leads, and make sure they are fully inserted into the lugs by looking through the lug screw holes. Insert the lug screws and connect the six main leads using the 1/4” hex bit socket and the torque wrench. Torque all six lug screws to 200 in−lbs.

14. Install the front cover of the Contactor UD7S6 enclosure and secure it by tightening the holding screw at the bottom.

15. **Type 1, 2, or 4 TPMS sites with Fused Disconnect switches.**

    a. Remove the lockout/tagout device and set the Output Fused Disconnect UD61A5S3 to the **ON** position.

    b. Remove the lockout/tagout device and verify the Maintenance Bypass Fused Disconnect UD61A5S2 is in the **OFF** position.

    c. Verify the Input Fused Disconnect UD61A5S1 is in the **ON** position.

    d. At the TPS Control Panel UD62A6, perform the following to start the TPS:

        1) Verify the PUSH TO RESET button is pushed in.

        2) Set CB1 to the **ON** position.

        3) Turn the BATTERY switch to the **NORMAL** position.

        4) Turn the MODE switch to the **NORMAL** position.

5) Turn the **START** switch to the right momentarily. The TPS should start and transfer to the normal, on−line mode.

e. Proceed to step 17.

16. **Type 5, 6, or 9 TPMS sites with Maintenance Bypass Module.**

a. Remove the lockout/tagout device and set the Unit Output Breaker (UOB) (middle breaker) to the **ON** position.

b. Remove the lockout/tagout device and verify the Maintenance Bypass Breaker (top breaker) is in the **OFF** position.

c. Verify the Unit Input Breaker (UIB) (bottom breaker) is in the **ON** position.

d. At the TPS Control Panel UD62A6, perform the following to start the TPS:

1) Verify the PUSH TO RESET button is pushed in.

2) Set CB1 to the **ON** position.

3) Turn the BATTERY switch to the **NORMAL** position.

4) Turn the MODE switch to the **NORMAL** position.

5) Turn the **START** switch to the right momentarily. The TPS should start and transfer to the normal, on−line mode.

17. At the CEC Coil Control Box UD7TPS1, set the circuit breaker to **ON**.

18. On the RDA Secondary PDP, set all circuit breakers to **ON**.

19. Perform the applicable RDA, RPG, and RBDDS equipment startup procedures per paragraph 3−5.5.

3−5.6.24 Circuit Breaker Main CB1/3, Generator Shelter Power Distribution Panel UD10A2 Removal/Replacement.

This procedure requires two technicians.

3−5.6.24.1 Equipment and Tools Required.

1. Screwdriver set, flat−tip

2. Flashlight

3. Multimeter

3−5.6.24.2 Initial Conditions/Preliminary Setup.

CAUTION

This procedure will turn off the Main Disconnect Switch UD10S1 in the generator shelter which will remove all power to the RDA shelter and the TPMS shelter. Ensure the RDA/RPG equipment and TPS system are properly shut down.

1. Perform the applicable RDA, RPG, and RBDDS equipment shutdown procedures per paragraph 3−5.4.
2. Perform TPS shutdown procedure per Table 2−8, steps 1 through 3.
3. Disable the generator by performing the following applicable step:
   a. For Onan generators, perform the following steps:
      1) On the generator control panel, set the RUN−STOP(RESET)−REMOTE switch to **STOP**. Observe that the red SWITCH OFF indicator flashes on and off continuously.
      2) On the generator control panel, push the emergency stop button **IN**.
   b. For Kohler generators, perform the following steps:
      1) On the generator control panel, set the RUN−OFF/RESET−AUTO switch to **OFF**. Observe that the GENERATOR SWITCH NOT IN AUTO indicator illuminates.
      2) On the generator control panel, push the emergency stop button **IN**.
4. Set the utility power Main Disconnect switch UD10S1 to the **OFF** position.

3−5.6.24.3 Removal/Replacement Procedure.

WARNING

Failure to perform the preliminary setup can cause damage to equipment and serious injury or **DEATH**.

1. On the PDP (AC Load Center) UD10A2, set the main circuit breaker CB1/3 to **OFF**.
2. Remove the front cover of the PDP using the proper screwdriver.
3. Using a multimeter, verify there is no AC voltage on the terminals of CB1/3.
4. Tag and remove the leads from circuit breaker CB1/3 using the proper screwdriver.

5. Remove the circuit breaker by pulling outward and to the side.

6. Insert the new circuit breaker.

7. Using the tags as a guide, install the leads to the new circuit breaker using the proper screwdriver.

8. Install the front cover of the PDP using the proper screwdriver.

9. On the PDP, set circuit breaker CB1/3 to **ON**.

10. Set the utility power Main Disconnect Switch UD10S1 to the **ON** position.

11. Return the generator to a “ready” status as follows:

    a. For Onan generators:

        1) On the generator control panel, pull the emergency stop button **OUT**.

        2) On the generator control panel, set the RUN−STOP(RESET)−REMOTE switch to the **REMOTE** position.

    b. For Kohler generators:

        1) On the generator control panel, rotate the emergency stop button 1/4 turn clockwise until button pops out.

        2) On the generator control panel, set the RUN−OFF/RESET−AUTO switch to the **AUTO** position.

12. Perform TPS power−up procedure per Table 2−9, steps 4 through 9.

13. Perform the applicable RDA, RPG, and RBDDS equipment startup procedures per paragraph 3−5.5.

3−5.6.25 Circuit Breaker CB5−CB9, Generator Shelter Power Distribution Panel UD10A2 Removal/Replacement.

This procedure requires two technicians.

This procedure is for circuit breakers UD10A2CB5 through 9. If the Main circuit breaker, UD10A2CB1/3 is to be replaced, refer to paragraph 3−5.6.24.

3−5.6.25.1 Equipment and Tools Required.

1. Screwdriver set, flat−tip

2. Multimeter

3. Flashlight

3−5.6.25.2 Initial Conditions/Preliminary Setup.

1. At the generator shelter Power Distribution Panel (AC load center) UD10A2, set the ganged Main circuit breaker CB1/3 to **OFF**.

3−5.6.25.3 Removal/Replacement Procedure.

WARNINGS

Failure to perform the preliminary setup can cause damage to equipment and serious injury or **DEATH**.

This procedure is for the replacement of circuit breaker CB5 through CB9 only. If the Main circuit breaker CB1/3 is to be replaced, refer to paragraph 3−5.6.24. This procedure does not remove the power to the input of CB1/3.

Although the Main circuit breaker CB1/3 is turned off, removing power to circuit breakers CB5 through CB9, the wire inputs to the terminals of CB1/3 still have 120 Vac each (208 Vac). Use extreme caution when working around the CB1/3 terminals.

1. Set the circuit breaker to be replaced to **OFF**.
2. Remove the front cover of the PDP (AC Load Center) using the proper screwdriver.
3. Using a multimeter, verify there is no AC voltage on the circuit breaker terminal of the breaker to be replaced.
4. Remove the lead from the circuit breaker to be replaced using the proper screwdriver.
5. Remove the circuit breaker by pulling outward and to the side.
6. Insert the new circuit breaker by pressing it in until it snaps in place.
7. Install the lead to the new circuit breaker and tighten the terminal screw with the proper screwdriver.
8. Install the front cover of the PDP using the proper screwdriver.
9. On the PDP, set the Main circuit breaker CB1/3 and the circuit breaker replaced to **ON**.
10. Verify the new circuit breaker works.
11. Close the door of the PDP.

3−5.6.26 Generator Fuel Level Sensor Assembly UD10A6A1 Removal/Replacement.

This procedure requires two technicians.

3−5.6.26.1 Equipment and Tools Required.

1. Screwdriver set, flat−tip
2. ESD Component Handling Kit
3. Pliers set
4. Wrench set, adjustable 15”
5. Lint−free cloths or paper towels
6. ESD conductive bag
7. Multimeter

3−5.6.26.2 Initial Conditions/Preliminary Setup.

1. On the RDA Maintenance Panel UD5A2, set the DAU POWER switch to **OFF**.
2. Disable the generator by performing the following applicable step.
   a. For Onan generators, perform the following steps:
      1) On the generator control panel, set the RUN−STOP(RESET)−REMOTE switch to **STOP**. Observe that the red SWITCH OFF indicator flashes on and off continuously.
      2) On the generator control panel, push the emergency stop button **IN**.
   b. For Kohler generators, perform the following steps:
      1) On the generator control panel, set the RUN−OFF/RESET−AUTO switch to **OFF**. Observe that the GENERATOR SWITCH NOT IN AUTO indicator illuminates.
      2) On the generator control panel, push the emergency stop button **IN**.

3−5.6.26.3 Removal/Replacement Procedure.

WARNING

Failure to perform the preliminary setup can cause damage to equipment and serious injury or **DEATH**.

NOTES

The generator fuel level sensor replacement assembly should be equipped with a surge suppressor and spark protector. Check with parts list in NWS EHB 6−501 for appropriate part numbers.

NOTES − CONT.

This procedure replaces the entire fuel level sensor that contains the electronic sensor unit, surge suppressor, and spark arrester. If the electronic unit is to be replaced, see paragraph 3−5.6.27.

1. Unscrew and remove the cover from the lower housing of the fuel level sensor assembly. It may be necessary to use a large screwdriver or the handle of the 15” adjustable wrench to break the cover loose.
2. Loosen one of the screws securing the plastic insulating shield that bends around the surge suppressor terminal screws. Move the plastic shield out of the way to gain access to the terminals.
3. Using a digital multimeter on the DC volts function, verify there is no DC voltage on either of the surge suppressor terminal screws. If DC voltage is detected then the DAU POWER switch has not been turned off.
4. Remove the red and black wire leads from the read and black terminal screws.
5. Move the plastic insulating shield back in place and tighten screw.
6. Loosen the nut securing the flexible conduit to the fuel level sensor housing and remove the conduit from the sensor and pull the wires from the housing.
7. Using a 15” adjustable wrench, loosen the 2” nut which secures the fuel level sensor assembly to the fuel tank and rotate the sensor assembly counterclockwise until it is completely loose.
8. Pull the fuel level sensor assembly straight up out of the tank while using a wiping rag or paper towels to wipe off excess fuel from the probe.
9. Carefully lay the new fuel level sensor assembly on top of the fuel tank in such as position that the sensor leads may be re−connected to the sensor surge suppressor terminal board. Make sure that the fuel level sensor assembly is stable and will not roll off the top of the tank.
10. Refer to paragraph 3−6.6.3, Fuel Level Sensor Calibration, and begin at step 11. Performing steps 11 through 32 will complete the installation and calibration of new new sensor assembly.

3−5.6.27 Electronic Unit, Fuel Level Sensor UD10A6A1A2 Removal/Replacement.

The procedure requires one technician.

3−5.6.27.1 Equipment and Tools Required.

1. Screwdriver set, flat−tip
2. Multimeter
3. Multimeter, test leads with alligator clip and spade terminals

4. Pliers
5. Wrench, adjustable, 15”
6. ESD Component Handling Kit

3−5.6.27.2 Initial Conditions/Preliminary Setup.

1. Obtain control of the RDA from the MSCF by performing paragraph 3−5.4, steps 1 through 2c.
2. At the RDA Maintenance Panel UD5A2, set the DAU POWER switch to **OFF.**

NOTE

The engine generator is disabled only as a precaution. It is not necessary to disable the engine generator to perform this procedure. However, if the generator is not disabled, have hearing protection available in the event the engine generator does start up.

3. Disable the generator by performing the following applicable step:
   a. For Onan generators, perform the following steps:
      1) On the generator control panel, set the RUN−STOP(REST)−REMOTE switch to **STOP**. Observe that the red SWITCH OFF indicator flashes on and off continuously.
      2) On the generator control panel, push the emergency stop button **IN**.
   b. For Kohler generators, perform the following steps:
      1) On the generator control panel, set the RUN−OFF/RESET−AUTO switch to **OFF**. Observe that the GENERATOR SWITCH NOT IN AUTO indicator illuminates.
      2) On the generator control panel, push the emergency stop button **IN**.

3−5.6.27.3 Removal/Replacement Procedure.

WARNING

Failure to perform the preliminary setup can cause damage to equipment and serious injury.

1. Unscrew and remove the cover from the lower housing of the fuel level sensor assembly. It may be necessary to use a large screwdriver to break the cover loose.

ESD **CAUTION** **ESD**

The Fuel Level Sensor Electronic Unit UD10A6A1A2 is an electrostatic sensitive device which requires special handling.

2. Attach ESD wrist strap to wrist and connect clip−lead to ground.

3. Loosen the lower left screw that secures the plastic insulating shield that bends around the surge suppressor terminal screws. Move the plastic shield out of the way to gain access to the terminals. Re−tighten the loosened screw.

4. Using a digital multimeter on the DC volts function, verify there is no DC voltage on either of the surge suppressor terminal screws. If DC voltage is detected then the DAU POWER switch has not been turned off.

5. Remove the red and black wire leads from the red and black surge suppressor terminal screws.

6. Tag and disconnect the wires from the terminal board on the backside of the electronic unit. These wires should come from the Spark Arrester UD10A6A1E1.

7. Using a long, flat−tip screwdriver, loosen the two captive screws at the base of the electronic unit and pull the unit from the sensor housing and set it on an ESD protective bag.

NOTE

It will be necessary to remove the Surge Suppressor Assembly UD10A6A1E2 and plastic insulator from the electronic unit removed and reinstall them on the new electronic unit.

8. Using a flat−tip screwdriver, loosen the upper left screw that secures the green wire from the surge suppressor board and pull the wire loose. Re−tighten screw.

9. Using a flat−tip screwdriver, remove the two screws and spacers that secures the surge suppressor board to the old electronic unit terminal board. Remove the surge suppressor board.

10. Loosen the remaining screw that holds the other end of the plastic insulating shield and remove the plastic shield. Re−tighten screw.

11. Lay the new electronic unit on the ESD bag, with the terminal board with two screws facing up, and remove the two terminal board screws. Reinstall removed screws on the old electronic unit.

12. Reinstall the two spacers and surge suppressor board removed from the old unit onto the new electronic unit and secure them with the two long screws. Tighten the screws.

13. Loosen the upper left screw on the electronic unit and insert the spade end of the green wire from the surge suppressor board and tighten screw.

14. Loosen the middle right screw on the electronic unit and reinstall the plastic insulating shield and tighten screw. Leave the other end of the plastic shield loose at this time.

15. On the electronic unit, between the two circuit cards, set the Timer Delay switch to **OFF** (down).

16. On the backside of the electronic unit, set the Step Span dip switches as follows: bit 1 to **ON** and bits 2, 3, and 4 to **OFF**.

17. Install the new electronic unit with the surge suppressor board and plastic insulating shield attached into the fuel level sensor housing. Ensure the electronic unit is installed with the attached surge suppressor board facing the conduit connected to the housing unit.

18. Using the long, flat−tip screwdriver, tighten the captive screws that secures the electronic unit to the fuel level sensor housing.

19. Untag and reattach the spark arrester wires to the terminal board on the back side of the electronic unit. The blue sleeved wire should be on the “P” terminal, the orange wire should be on the “S” terminal, and the green wire should be on the “G” terminal or the ground screw at the bottom of the sensor housing.

NOTE

The new electronic unit will require calibration. Refer to the paragraph in the following step to complete the procedure.

20. Refer to paragraph 3−6.6.3, Fuel Level Sensor Calibration, and begin at step 8 to complete this procedure. Performing steps 8 through 32 will complete the installation and calibration of the new electronic unit.

3−5.6.28 Spark Arrestor and Surge Suppressor, Fuel Level Sensor UD10A6A1E1/E2 Removal/Replacement.

The procedure requires one technician.

3−5.6.28.1 Equipment and Tools Required.

1. Screwdriver set, flat−tip

2. Multimeter

3. ESD Component Handling Kit

3−5.6.28.2 Initial Conditions/Preliminary Setup.

1. Obtain control of the RDA from the MSCF by performing paragraph 3−5.4, steps 1 through 2c.

2. At the RDA Maintenance Panel UD5A2, set the DAU POWER switch to **OFF.**

NOTE

The engine generator is disabled only as a precaution. It is not necessary to disable the engine generator to perform this procedure. However, if the generator is not disabled, have hearing protection available in the event the engine generator does start up.

3. Disable the generator by performing the following applicable step:

   a. For Onan generators, perform the following steps:

      1) On the generator control panel, set the RUN−STOP(REST)−REMOTE switch to **STOP**. Observe that the red SWITCH OFF indicator flashes on and off continuously.

      2) On the generator control panel, push the emergency stop button **IN**.

   b. For Kohler generators, perform the following steps:

      1) On the generator control panel, set the RUN−OFF/RESET−AUTO switch to **OFF**. Observe that the GENERATOR SWITCH NOT IN AUTO indicator illuminates.

      2) On the generator control panel, push the emergency stop button **IN**.

3−5.6.28.3 Removal/Replacement Procedure.

WARNING

Failure to perform the preliminary setup can cause damage to equipment and serious injury.

1. Unscrew and remove the cover from the lower housing of the fuel level sensor assembly. It may be necessary to use a large screwdriver to break the cover loose.

ESD **CAUTION** **ESD**

The Fuel Level Sensor Electronic Unit UD10A6A1A2 and Surge Suppressor UD10A6A1E2 are electrostatic sensitive devices which requires special handling.

2. Attach ESD wrist strap to wrist and connect clip−lead to ground.

3. Loosen the lower left screw on the electronic unit that secures the plastic insulating shield that bends around the surge suppressor terminal screws. Move the plastic shield out of the way to gain access to the terminals.

4. Using a digital multimeter on the DC volts function, verify there is no DC voltage on either of the surge suppressor terminal screws. If DC voltage is detected then the DAU POWER switch has not been turned off.

NOTE

If replacing the surge suppressor perform step 5. If replacing the spark arrester, perform step 6. If replacing both, perform both step 5 and 6.

5. Surge Suppressor UD10A6A1E2 replacement procedure:

   a. Remove the red and black wire leads from the red and black surge suppressor terminal board screws.

   b. Loosen the upper left screw on the electronic unit that secures the green wire from the surge suppressor board and pull the wire loose.

   c. Remove the two screws and spacers that secures the surge suppressor board to the electronic unit terminal board. Be careful when removing the screws as the spacers may fall into the fuel level sensor housing. Remove the surge suppressor board.

   d. Install the new surge suppressor board. While holding one of the spacers on one of the terminal board slots on the electronic unit, install the surge suppressor board, with the component side facing the terminal board, and insert the screw and loosely tighten the screw. Install the other spacer and screw and tighten both screws to secure the surge suppressor board to the electronic unit terminal board.

   e. Attach the green wire from the surge suppressor with a spade lug to the upper left screw on the electronic unit and tighten screw.

   f. If the spark arrester is not being replaced, proceed to step 7.

6. Spark Arrester UD10A6A1E1 replacement procedure:

   a. Tag and disconnect the wires from the terminal board on the backside of the electronic unit.

   b. Loosen the screw securing the spark arrester to the mounting post in the well of the sensor housing while pulling up on the spark arrester assembly so the screw will not fall into the housing. Set the screw and spark arrester aside.

   c. Insert the screw into the bracket of the new spark arrester and attach the spark arrester to the mounting post and tighten the screw.

   d. Using the old spark arrester as a guide, connect the new spark arrester wires to the terminal board on the backside of the electronic unit. The blue sleeved wire should be on the “P” terminal, the orange wire should be on the “S” terminal, and the green wire should be on the “G” terminal or the ground screw at the bottom of the sensor housing.

7. At the RDA Maintenance Panel, set the DAU POWER switch to **ON**.

8. Wait approximately three minutes to allow the RDASC computer to update.

9. At the RDA Applications Terminal Main Menu command and parameter lines, enter **DIPD<Tab>TOW<Enter>** and verify/record the GEN FUEL LEVEL reading in the second column.

10. Perform a fuel level calibration check per paragraph 3−6.6.2, beginning at step 4, to complete this procedure.

11. If the calibration check proved successful, replace the cover to the fuel level sensor and tighten.

12. At the RDA Maintenance Terminal Applications screen command and parameter lines enter, **TERP<Tab>*password*<Enter>** (the default password is FLOYD) to terminate the applications program in order to clear any alarms that may exist.

13. Press the **<Alt>** and **<Tab>** keys or use the mouse and click on the RDA Systems Console screen to access the RDA Systems Console * prompt. Wait for the applications program to terminate before proceeding.

14. At the RDA Systems Console * prompt, enter **RDAUP<Enter>** to restart the applications program.

15. Press the **<Alt>** and **<Tab>** keys or use the mouse and click on the RDA Applications Terminal screen to access the main menu.

16. At the RDA Applications Terminal main menu, enter the following to return control of the system to the MSCF:

    a. **OPER <Enter>** and verify the status line changes to `OPER`.

    b. **ENRC <Enter>** to enable remote control.

3−5.6.29 Thermal Detector UD10A8 Removal/Replacement.

This procedure requires two technicians.

3−5.6.29.1 Equipment and Tools Required.

1. Screwdriver set, flat−tip

2. Pliers, diagonal cutters

3. Flashlight

3−5.6.29.2 Initial Conditions/Preliminary Setup.

1. Obtain local control of the RDA and terminate the applications software by performing paragraph 3−5.4, steps 1 and 2.

2. On the RDA Maintenance Panel UD5A2, set the DAU POWER switch to **OFF**.

3−5.6.29.3 Removal/Replacement Procedure.

WARNING

Failure to perform the preliminary setup can cause damage to equipment and serious injury or **DEATH**.

1. Remove thermal detector cover.
2. Tag and disconnect wires from thermal detector.
3. Remove two screws securing thermal detector to ceiling.
4. Obtain new thermal detector and remove cover.
5. Pull wires through thermal detector and secure detector to ceiling with two screws previously removed.
6. Using tags as guides, reconnect wires to thermal detector.
7. Replace thermal detector cover.
8. On the RDA Maintenance Panel UD5A2, set the DAU POWER switch to **ON**.
9. Perform an operation check per paragraph 3−2.10 and the annual PMI inspection in NWS EHB 6−503−2, Card 2−040.
10. Return the RDA to an operational state and transfer control back to the MSCF as follows:
    a. At the Systems Console, enter **RDAUP<Enter>**.
    b. Using the mouse, click on the Applications Terminal screen. Wait for the applications software to reload as indicated by the Main Menu refreshing.
    c. At the Applications Terminal Main Menu command line, enter:
        1) **OPER<Enter>**.
        2) **ENRC<Enter>** to enable remote control.

3−5.6.30 Surge Protector UD10A20 Removal/Replacement.

This procedure requires two technicians.

3−5.6.30.1 Equipment and Tools Required.

1. Screwdriver set, Phillips−tip

2. Screwdriver set, flat−tip
3. Miniature screwdriver set, flat−tip
4. Allen wrench set
5. Socket wrench set
6. Multimeter
7. Sargent and Greenlee chassis punch (if entire box is to be replaced)
8. Channel lock pliers
9. Adjustable wrench, 6”
10. Hammer
11. Punch, small

3−5.6.30.2 Initial Conditions/Preliminary Setup.

CAUTION

This procedure will turn off the Main site disconnect located outside the generator shelter near the main site input power panel which will remove all power to the RDA shelter, generator shelter, and the TPMS shelter. Ensure the RDA/RPG equipment, generator, and TPS system are properly shut down.

1. Perform the applicable RDA, RPG, and RBDDS equipment shutdown procedures per paragraph 3−5.4.
2. Perform TPS shutdown procedure per Table 2−8, steps 1 through 3.
3. Disable the generator by performing the following applicable step:
   a. For Onan generators, perform the following steps:
      1) On the generator control panel, set the RUN−STOP(RESET)−REMOTE switch to **STOP**. Observe that the red SWITCH OFF indicator flashes on and off continuously.
      2) On the generator control panel, push the emergency stop button **IN**.
   b. For Kohler generators, perform the following steps:
      1) On the generator control panel, set the RUN−OFF/RESET−AUTO switch to **OFF**. Observe that the GENERATOR SWITCH NOT IN AUTO indicator illuminates.
      2) On the generator control panel, push the emergency stop button **IN**.

4. Set the utility power Main Disconnect Switch UD10S1 to the **OFF** position.

WARNING

The Main site disconnect **MUST** be turned off to remove power to the Surge Suppressor UD10A20.

5. At the Main site disconnect, set the disconnect switch to **OFF**.

3−5.6.30.3 Removal/Replacement Procedure.

WARNING

Failure to perform the preliminary setup can cause damage to equipment and serious injury or **DEATH**.

1. At the Surge Suppressor UD10A20, loosen the six screws that secure the door catches to the door. The screws and door catches do not have to be removed. Once the screws are loose, flip each door catch up and out of the way.

2. Open the surge suppressor door. The door has a tight seal and may have to be pried open.

3. Using a multimeter, verify there is no AC voltage between the phase lugs or from neutral to each phase lug.

4. Using an Allen wrench, loosen the five lug screws securing the phase, neutral, and ground wires. The ground lug on some models may be secured with a flat−tip screw. Make a note of the wire color attached to each lug.

5. Pull the wires from the lugs.

NOTE

The new replacement Surge Suppressor Assembly UD10A20 will not have a hole punched in the upper left side for the wire entry from the Main Disconnect Switch UD10S1. A hole will have to be punched through the box in the same location as the replaced box in order for it to mate up with the conduit from the Main Disconnect Switch UD10S1. An alternate method of replacement is to remove the component mounting plate from the new assembly that contains the fuses, surge protector modules, and circuit card assembly and reinstall it in the surge suppressor box still on the wall. However, some models have neon bulbs versus LEDs. The surge suppressors with the neon bulbs will also require the door with the LED assembly to be removed and reinstalled as well. Continue with step 6 if changing the entire surge suppressor box or proceed to step 7 if the alternate method is preferred.

6. To replace the entire surge suppressor box, perform the following steps:

   a. Remove the cover plate to the Main Disconnect Switch UD10S1.

   b. Carefully pull the five wires that enter the surge suppressor back far enough in order for the surge suppressor box to be removed from the wall. The large gauge of wire will make the wires difficult to work with.

   c. Using channel locking pliers, loosen and remove the plastic outer conduit nut and set aside.

   d. Using channel locking pliers, loosen and remove the metal locking nut and set aside.

   e. While supporting the surge suppressor box, remove the four mounting screws using the proper socket/wrench and set the surge suppressor aside. The box weighs approximately 20 pounds.

   f. Open the door of the new surge suppressor box and mark the location of the conduit connection point (punched hole) using measurements taken from the old surge suppressor box. This is critical so it will mate with the existing conduit from the Main Disconnect Switch UD10S1.

   g. Using the chassis hole punch, punch a hole in the new box of the same diameter and in the exact location as in the replaced box. It may be necessary to remove the inner component mounting plate to use the chassis hole punch. If so, refer to steps 7.c through 7.f.

   h. Mount the new surge suppressor box to the wall and secure it with the screws removed in step e.

   i. Open the surge suppressor door.

   j. Install the metal conduit locking nut and tighten it with channel locking pliers.

   k. Install the conduit plastic outer nut and tighten it with channel locking pliers.

   l. Carefully push the five wires that feed the surge suppressor back into the new surge suppressor box. The large gauge of wire will make the wires difficult to work with.

   m. Install the cover plate to the Main Disconnect Switch UD10S1.

   n. Continue with step 8 to complete the procedure.

CAUTION

The following step is provided only as an alternate method depending on the tools available, skills, and urgency of repair. Another factor to consider is the possible differences between the surge suppressor being replaced as compared to the type that was received as a replacement. The most notable difference is green LEDs on the door panel versus the older models with neon bulbs and removable red lens caps. If the surge suppressor to be replaced is exactly like the new asset, then components can be removed from one and put in the other. However, if the surge suppressor to be replaced has the neon bulbs, then both the component mounting plate and the front panel door with the LED assembly will have to be removed from the new box and reinstalled on the existing box. Carefully review the schematic of each surge suppressor that is on the door for electrical compatibility (i.e., the unit with LEDs has a 5.6K ohm voltage dropping resistor for each LED versus the units with neon bulbs have two 15K ohm resistors in series for each bulb).

7. Alternate procedure: remove the surge suppressor internal components and front panel door from the new surge suppressor box and install them in the surge suppressor box already mounted to the wall.

   a. With the new surge suppressor laying on the floor or suitable working surface, loosen the six screws that secure the door catches to the door. The screws and door catches do not have to be removed. Once the screws are loose, flip each door catch up and out of the way.

   b. Open the surge suppressor door. The door has a tight seal and may have to be pried open.

   c. Remove the wiring harness screw that secures the harness to the component mounting plate using the proper screwdriver.

   d. Using a miniature flat−tip screwdriver, disconnect the four wires connected to the terminal board on the circuit card. The circuit board has the color of the wires etched onto the board. If not, make note of the position of the wires on the terminal board.

   e. Remove the four corner screws that secure the component mounting plate to the back of the housing. The upper right corner will have a neutral−to−ground (N−G) protector component that also needs to be removed. The component mounting plate should be free to lift out of the housing box.

   f. By holding the fuses, carefully tilt the mounting plate up and lift it out of the surge suppressor box and set it on a clean, flat surface.

g. On the surge suppressor mounted to the wall, repeat steps c. through f. to remove the defective component mounting plate. The four plastic insulator/stand−offs may fall off the housing studs. These must be retrieved and reinstalled.

h. Install or ensure the four plastic insulator/stand−offs are mounted on the housing studs.

i. By holding the fuses, carefully tilt the new mounting plate and place it in the surge suppressor box mounted on the wall. Ensure the plastic insulator/stand−offs do not fall off the studs.

j. Install and loosely tighten the upper left and the two bottom screws to secure the component mounting plate to the back of the housing.

k. With the remaining screw installed through the screw hole in the N−G protector, install the N−G protector in the upper right corner and tighten the screw.

l. Tighten the other three screws.

m. If the defective surge suppressor has neon bulbs on the front panel door, then the front panel door will have to be removed from the new box and reinstalled on the existing box. Perform the following steps:

   1) At the new surge suppressor box, close the door.

   2) Using a punch and hammer, tap the hinge pin and drive the pin out about an inch. Use the channel locking pliers and pull pin the remaining way out.

   3) Remove the door from the new surge suppressor box and set it aside.

   4) Repeat steps 1 through 3 on the defective surge suppressor assembly to remove the front panel door.

   5) Install the new door on the existing box by aligning the hinge and tapping the hinge pin in with a hammer.

n. Install the wiring harness wires to the circuit card terminal board following the colors etched on the board and secure wires with a miniature flat−tip screwdriver.

o. Install the wiring harness screw that secures the harness to the component mounting plate using the proper screwdriver.

p. Continue with step 8 to complete the procedure.

8. Insert the five wires into the lugs as removed in step 4. The A−phase wire should be black. The B−phase wire should be red or taped red. The C−phase wire should be blue or taped blue. The neutral wire should be white or taped white. The ground wire should be green or taped green.

9. With the wires inserted into their respective lugs, use the Allen wrench and tighten the lug screws. The ground wire on some models may be secured with a flat−tip lug screw.

10. Look the surge suppressor over and make sure all wires are attached, the N−G protector is mounted to upper right screw, and all wires are connected to the LED assembly, and that the wiring harness is attached to the terminal board on the circuit card.

11. Close the door of the surge suppressor and secure door with the door catches and tighten the screws.

12. At the Main site disconnect, set the disconnect switch to **ON**.

13. At the surge suppressor, ensure all three LEDs on the door are lit.

14. Set the utility power Main Disconnect Switch UD10S1 to the **ON** position.

15. Return the generator to a “ready” status by performing the following applicable step:

    a. For Onan generators, perform the following steps:

        1) On the generator control panel, pull the emergency stop button **OUT**.

        2) On the generator control panel, set the RUN−STOP(RESET)−REMOTE switch to **REMOTE**. Observe that the red SWITCH OFF indicator turns off.

    b. For Kohler generators, perform the following steps:

        1) On the generator control panel, rotate the emergency stop button 1/4 turn clockwise until the button pops **OUT**.

        2) On the generator control panel, set the RUN−OFF/RESET−AUTO switch to **AUTO**. Observe that the GENERATOR SWITCH NOT IN AUTO indicator turns off.

16. Perform TPS power−up procedure per Table 2−9, steps 4 through 9.

17. Perform the applicable RDA/RPG/RBDDS equipment startup procedures per paragraph 3−5.5.

18. If the component mounting plate and door assembly were removed from the defective surge suppressor box, reinstall the components in the new surge suppressor box by performing steps 7.h through 7.l and 7.m.5, except substitute neon bulb assembly for LED assembly.

3−5.6.31 LED Assembly, Surge Suppressor UD10A20DS1 − DS3 Removal/Replacement.

This procedure requires two technicians.

CAUTION

The Surge Suppressor, model number 1455−85, electronic components may vary depending on when the original box was installed. Earlier models use neon bulbs and red lens caps on the door panel. However, the newer models use green LED lamps on the door panel. This procedure describes the LED Assembly replacement only.

3−5.6.31.1 Equipment and Tools Required.

1. Screwdriver set, Phillips−tip
2. Multimeter
3. Adjustable wrench
4. Soldering iron, low wattage
5. Solder
6. Face shield or safety goggles

3−5.6.31.2 Initial Conditions/Preliminary Setup.

CAUTION

This procedure will turn off the Main site disconnect located outside the generator shelter near the main site input power panel which will remove all power to the RDA shelter, generator shelter, and the TPMS shelter. Ensure the RDA/RPG equipment, generator, and TPS system are properly shut down.

1. Perform the applicable RDA, RPG, and RBDDS equipment shutdown procedures per paragraph 3−5.4.
2. Perform TPS shutdown procedure per Table 2−8, steps 1 through 3.
3. Disable the generator by performing the following applicable step:
   a. For Onan generators, perform the following steps:
      1) On the generator control panel, set the RUN−STOP(RESET)−REMOTE switch to **STOP**. Observe that the red SWITCH OFF indicator flashes on and off continuously.

2) On the generator control panel, push the emergency stop button **IN**.

b. For Kohler generators, perform the following steps:

1) On the generator control panel, set the RUN−OFF/RESET−AUTO switch to **OFF**. Observe that the GENERATOR SWITCH NOT IN AUTO indicator illuminates.

2) On the generator control panel, push the emergency stop button **IN**.

4. Set the utility power Main Disconnect Switch UD10S1 to the **OFF** position.

WARNING

The Main site disconnect **MUST** be turned off to remove power to the Surge Suppressor UD10A20.

5. At the Main site disconnect, set the disconnect switch to **OFF**.

3−5.6.31.3 Removal/Replacement Procedure.

WARNING

Failure to perform the preliminary setup can cause damage to equipment and serious injury or **DEATH**.

1. At the Surge Suppressor UD10A20, loosen the six screws that secure the door catches to the door. The screws and door catches do not have to be removed. Once the screws are loose, flip each door catch up and out of the way.

2. Open the surge suppressor door. The door has a tight seal and may have to be pried open.

3. Using a multimeter, verify there is no AC voltage between the phase lugs or from neutral to each phase lug.

WARNING

Wear a face shield, safety goggles, normal prescription glasses, or plain safety glasses while soldering. Never sling excess solder from the soldering iron; wipe it off with a damp cloth or sponge. Ensure the area is well ventilated.

4. Tag and desolder the wire leads from the defective LED assembly using a low wattage soldering iron.

5. Using an adjustable wrench, remove the nut and washer securing the LED assembly to the back side of the door. Note the orientation of the wire terminals.

6. Pull the defective LED assembly and o−ring from the front side of the door.
7. Ensure the o−ring is on the new LED assembly and install the LED assembly.
8. Install the washer and nut and finger tighten the nut.
9. Orientate the LED assembly wire terminals as the others (horizontal pin to the bottom and the vertical pin to the top).
10. Untag and resolder the wire leads to the LED assembly terminals.
11. Close the door of the surge suppressor and secure door with the door catches and tighten the screws.
12. At the Main site disconnect, set the disconnect switch to **ON**.
13. At the surge suppressor, ensure all three LEDs on the door are lit.
14. Set the utility power Main Disconnect Switch UD10S1 to the **ON** position.
15. Return the generator to a “ready” status by performing the following applicable step:
    a. For Onan generators, perform the following steps:
        1) On the generator control panel, pull the emergency stop button **OUT**.
        2) On the generator control panel, set the RUN−STOP(RESET)−REMOTE switch to **REMOTE**. Observe that the red SWITCH OFF indicator turns off.
    b. For Kohler generators, perform the following steps:
        1) On the generator control panel, rotate the emergency stop button 1/4 turn clockwise until the button pops **OUT**.
        2) On the generator control panel, set the RUN−OFF/RESET−AUTO switch to **AUTO**. Observe that the GENERATOR SWITCH NOT IN AUTO indicator turns off.
16. Perform TPS power−up procedure per Table 2−9, steps 4 through 9.
17. Perform the applicable RDA, RPG, and RBDDS equipment startup procedures per paragraph 3−5.5.

3−5.6.32 Protector Modules, Surge Suppressor UD10A20E1−E6 Removal/Replacement.

This procedure requires two technicians.

CAUTION

The Surge Suppressor, model number 1455−85, electronic components may vary depending on when the original box was installed. Earlier models (distinguished by use of neon bulbs and red lens caps) had Protector Modules with Joslyn part number 72109. However, the newer models (distinguished by use of green LED lamps) use Joslyn part number 72233. The difference is due to the clamp voltage. Per the manufacturer, the P/N 72233 Protector Modules may be used in the older surge suppressor model boxes, but each phase must have the same type of protector module. In other words, do not mix the modules with different part numbers on the same phase.

NOTE

It might be advisable to replace both protector modules on a phase if the input phase fuse opened or it cannot be determined which module is defective if the door panel LED will not light.

3−5.6.32.1 Equipment and Tools Required.

1. Screwdriver set, Phillips−tip
2. Miniature screwdriver set, flat−tip
3. Socket wrench set, 3/8” drive
4. Wire cutter/insulation stripping tool
5. Multimeter
6. Fuse puller

3−5.6.32.2 Initial Conditions/Preliminary Setup.

CAUTION

This procedure will turn off the Main site disconnect located outside the generator shelter near the main site input power panel which will remove all power to the RDA shelter, generator shelter, and the TPMS shelter. Ensure the RDA/RPG equipment, generator, and TPS system are properly shut down.

1. Perform the applicable RDA, RPG, and RBDDS equipment shutdown procedures per paragraph 3−5.4.
2. Perform TPS shutdown procedure per Table 2−8, steps 1 through 3.
3. Disable the generator by performing the following applicable step:

a. For Onan generators, perform the following steps:

1) On the generator control panel, set the RUN−STOP(RESET)−REMOTE switch to **STOP**. Observe that the red SWITCH OFF indicator flashes on and off continuously.

2) On the generator control panel, push the emergency stop button **IN**.

b. For Kohler generators, perform the following steps:

1) On the generator control panel, set the RUN−OFF/RESET−AUTO switch to **OFF**. Observe that the GENERATOR SWITCH NOT IN AUTO indicator illuminates.

2) On the generator control panel, push the emergency stop button **IN**.

4. Set the utility power Main Disconnect Switch UD10S1 to the **OFF** position.

WARNING

The Main site disconnect **MUST** be turned off to remove power to the Surge Suppressor UD10A20.

5. At the Main site disconnect, set the disconnect switch to **OFF**.

3−5.6.32.3 Removal/Replacement Procedure.

WARNING

Failure to perform the preliminary setup can cause damage to equipment and serious injury or **DEATH**.

1. At the Surge Suppressor UD10A20, loosen the six screws that secure the door catches to the door. The screws and door catches do not have to be removed. Once the screws are loose, flip each door catch up and out of the way.

2. Open the surge suppressor door. The door has a tight seal and may have to be pried open.

3. Using a multimeter, verify there is no AC voltage between the phase lugs or from neutral to each phase lug.

4. Locate the protector module(s) to be replaced.

5. Pull the fuse associated with the protector modules from the fuse holder.

6. Using a 11/32” socket, remove the two nuts and washers from the studs protruding from the “Y” plate that is connected to one end of the fuse holder.

NOTE

If replacing both protector modules, it is recommended that they are removed and replaced completely one at a time.

7. Using a 11/32” socket, remove the nut and washers from the neutral stud of the protector module to be replaced.

8. While holding the neutral bus bar, remove the screw that secures the neutral bus bar to the component mounting plate using the proper screwdriver. Set the bus bar and screw aside.

9. Using a miniature flat−tip screwdriver, loosen the circuit card terminal board screw that secures the wire from the protector module to be replaced.

10. Using a 9/16” socket, remove the bolt from the end of the fuse holder that has the “Y” plate attached. There is a metal spacer below the plate assembly. Set the fuse holder end piece and “Y” plate assembly and the spacer aside.

NOTE

Note the orientation of the protector modules to be replaced. The Neutral stud should be to the outside while the Line stud should be next to the Line stud of the adjoining protector module.

11. Remove the protector module by rocking it as it is pulled upward. Mark the module (tape, scratch, etc.) so as not to confuse it with the new module.

12. Compare the new module wire lead to the one just removed and cut and strip the wire so they are the same length, if necessary. Wire length depends on the module location within the surge suppressor box.

WARNING

The new protector modules can be placed two ways within the surge suppressor box, depending on its location. Ensure the module is installed facing the same way as the module that was removed. **Installing the module incorrectly WILL result in equipment damage.**

13. Set the protector module against the aluminum tab at an angle and press downward and toward the adjoining module until it snaps in place. **Ensure the Line stud of the new module is next to the Line stud of the adjoining module and that the Neutral stud is to the outside.**

14. Insert the protector module wire lead to the terminal board and tighten the screw.

15. If replacing both protector modules, repeat steps 7 through 9 and 11 through 14 on the other module.

16. Insert the 9/16” bolt through the fuse holder end piece and “Y” plate assembly and metal spacer and install entire assembly on the large standoff with the “Y” plate resting on the two Line studs and tighten the bolt.

17. While holding the neutral bus bar with screw in place, set the bus bar on the component mounting plate and tighten the screw using the proper screwdriver.

18. While pressing the neutral bus bar against the protector module case, install the washers and nut and tighten the nut with 11/32” socket. If both modules were replaced, repeat steps 17 and 18 on the other neutral bus bar.

19. Install the washers and nuts on the Line studs of the two modules protruding from the “Y” plate and tighten with a 11/32” socket.

20. Install the fuse and align the fuse so the amperage rating is visible.

21. Close the door of the surge suppressor and secure door with the door catches and tighten the screws.

22. At the Main site disconnect, set the disconnect switch to **ON**.

23. At the surge suppressor, ensure all three LEDs on the door are lit.

24. Set the utility power Main Disconnect Switch UD10S1 to the **ON** position.

25. Return the generator to a “ready” status by performing the following applicable step:

    a. For Onan generators, perform the following steps:

        1) On the generator control panel, pull the emergency stop button **OUT**.

        2) On the generator control panel, set the RUN−STOP(RESET)−REMOTE switch to **REMOTE**. Observe that the red SWITCH OFF indicator turns off.

    b. For Kohler generators, perform the following steps:

        1) On the generator control panel, rotate the emergency stop button 1/4 turn clockwise until the button pops **OUT**.

        2) On the generator control panel, set the RUN−OFF/RESET−AUTO switch to **AUTO**. Observe that the GENERATOR SWITCH NOT IN AUTO indicator turns off.

26. Perform TPS power−up procedure per Table 2−9, steps 4 through 9.

27. Perform the applicable RDA, RPG, and RBDDS equipment startup procedures per paragraph 3−5.5.

3−5.6.33 N−G Protector, Surge Suppressor UD10A20E2 Removal/Replacement.

This procedure requires two technicians.

CAUTION

The Surge Suppressor, model number 1455−85, electronic components may vary depending on when the original box was installed. Earlier models (distinguished by use of neon bulbs and red lens caps) had N−G Protectors that consisted of a gas tube only. However, the newer models (distinguished by use of green LED lamps) use a N−G Protector that consists of the gas tube and four zener diodes. The new N−G Protector will work in the older model surge suppressor.

3−5.6.33.1 Equipment and Tools Required.

1. Screwdriver set, Phillips−tip
2. Multimeter

3−5.6.33.2 Initial Conditions/Preliminary Setup.

CAUTION

This procedure will turn off the Main site disconnect located outside the generator shelter near the main site input power panel which will remove all power to the RDA shelter, generator shelter, and the TPMS shelter. Ensure the RDA/RPG equipment, generator, and TPS system are properly shut down.

1. Perform the applicable RDA, RPG, and RBDDS equipment shutdown procedures per paragraph 3−5.4.
2. Perform TPS shutdown procedure per Table 2−8, steps 1 through 3.
3. Disable the generator by performing the following applicable step:
   a. For Onan generators, perform the following steps:
      1) On the generator control panel, set the RUN−STOP(RESET)−REMOTE switch to **STOP**. Observe that the red SWITCH OFF indicator flashes on and off continuously.
      2) On the generator control panel, push the emergency stop button **IN**.
   b. For Kohler generators, perform the following steps:
      1) On the generator control panel, set the RUN−OFF/RESET−AUTO switch to **OFF**. Observe that the GENERATOR SWITCH NOT IN AUTO indicator illuminates.
      2) On the generator control panel, push the emergency stop button **IN**.
4. Set the utility power Main Disconnect Switch UD10S1 to the **OFF** position.

WARNING

The Main site disconnect **MUST** be turned off to remove power to the Surge Suppressor UD10A20.

5. At the Main site disconnect, set the disconnect switch to **OFF**.

3−5.6.33.3 Removal/Replacement Procedure.

WARNING

Failure to perform the preliminary setup can cause damage to equipment and serious injury or **DEATH**.

1. At the Surge Suppressor UD10A20, loosen the six screws that secure the door catches to the door. The screws and door catches do not have to be removed. Once the screws are loose, flip each door catch up and out of the way.
2. Open the surge suppressor door. The door has a tight seal and may have to be pried open.
3. Using a multimeter, verify there is no AC voltage between the phase lugs or from neutral to each phase lug.
4. Locate the N−G Protector in the upper right hand corner of the surge suppressor box.
5. Remove the screw and N−G Protector using the proper screwdriver.
6. Ensure the new N−G Protector has the plastic spacer between the two screw hole tabs.
7. Insert the screw through the N−G Protector screw hole tabs and spacer and install on the component mounting plate.
8. Close the door of the surge suppressor and secure door with the door catches and tighten the screws.
9. At the Main site disconnect, set the disconnect switch to **ON**.
10. At the surge suppressor, ensure all three LEDs on the door are lit.
11. Set the utility power Main Disconnect Switch UD10S1 to the **ON** position.
12. Return the generator to a “ready” status by performing the following applicable step:
    a. For Onan generators, perform the following steps:
        1) On the generator control panel, pull the emergency stop button **OUT**.

2) On the generator control panel, set the RUN−STOP(RESET)−REMOTE switch to **REMOTE**. Observe that the red SWITCH OFF indicator turns off.

b. For Kohler generators, perform the following steps:

1) On the generator control panel, rotate the emergency stop button 1/4 turn clockwise until the button pops **OUT**.

2) On the generator control panel, set the RUN−OFF/RESET−AUTO switch to **AUTO**. Observe that the GENERATOR SWITCH NOT IN AUTO indicator turns off.

13. Perform TPS power−up procedure per Table 2−9, steps 4 through 9.

14. Perform the applicable RDA, RPG, and RBDDS equipment startup procedures per paragraph 3−5.5.

3−5.6.34 Fuses, Surge Suppressor UD10A20F1−F3 Removal/Replacement.

This procedure requires two technicians.

3−5.6.34.1 Equipment and Tools Required.

1. Screwdriver set, Phillips−tip

2. Multimeter

3. Fuse Puller

3−5.6.34.2 Initial Conditions/Preliminary Setup.

CAUTION

This procedure will turn off the Main site disconnect located outside the generator shelter near the main site input power panel which will remove all power to the RDA shelter, generator shelter, and the TPMS shelter. Ensure the RDA/RPG equipment, generator, and TPS system are properly shut down.

1. Perform the applicable RDA, RPG, and RBDDS equipment shutdown procedures per paragraph 3−5.4.

2. Perform TPS shutdown procedure per Table 2−8, steps 1 through 3.

3. Disable the generator by performing the following applicable step:

a. For Onan generators, perform the following steps:

1) On the generator control panel, set the RUN−STOP(RESET)−REMOTE switch to **STOP**. Observe that the red SWITCH OFF indicator flashes on and off continuously.

2) On the generator control panel, push the emergency stop button **IN**.

b. For Kohler generators, perform the following steps:

1) On the generator control panel, set the RUN−OFF/RESET−AUTO switch to **OFF**. Observe that the GENERATOR SWITCH NOT IN AUTO indicator illuminates.

2) On the generator control panel, push the emergency stop button **IN**.

4. Set the utility power Main Disconnect Switch UD10S1 to the **OFF** position.

WARNING

The Main site disconnect **MUST** be turned off to remove power to the Surge Suppressor UD10A20.

5. At the Main site disconnect, set the disconnect switch to **OFF**.

3−5.6.34.3 Removal/Replacement Procedure.

WARNING

Failure to perform the preliminary setup can cause damage to equipment and serious injury or **DEATH**.

1. At the Surge Suppressor UD10A20, loosen the six screws that secure the door catches to the door. The screws and door catches do not have to be removed. Once the screws are loose, flip each door catch up and out of the way.

2. Open the surge suppressor door. The door has a tight seal and may have to be pried open.

3. Using a multimeter, verify there is no AC voltage between the phase lugs or from neutral to each phase lug.

4. Identify the fuse to be replaced and pull the fuse out of the fuse holder.

5. Install the new fuse and ensure it snaps in place.

6. Close the door of the surge suppressor and secure door with the door catches and tighten the screws.

7. At the Main site disconnect, set the disconnect switch to **ON**.

8. At the surge suppressor, ensure all three LEDs on the door are lit.

9. Set the utility power Main Disconnect Switch UD10S1 to the **ON** position.

10. Return the generator to a “ready” status by performing the following applicable step:

a. For Onan generators, perform the following steps:

1) On the generator control panel, pull the emergency stop button **OUT**.

2) On the generator control panel, set the RUN−STOP/(RESET)−REMOTE switch to **REMOTE**. Observe that the red SWITCH OFF indicator turns off.

b. For Kohler generators, perform the following steps:

1) On the generator control panel, rotate the emergency stop button 1/4 turn clockwise until the button pops **OUT**.

2) On the generator control panel, set the RUN−OFF/RESET−AUTO switch to **AUTO**. Observe that the GENERATOR SWITCH NOT IN AUTO indicator turns off.

11. Perform TPS power−up procedure per Table 2−9, steps 4 through 9.

12. Perform the applicable RDA, RPG, and RBDDS equipment startup procedures per paragraph 3−5.5.

3−5.6.35 Thermostat, Ventilation UD10S2 Removal/Replacement.

This procedure requires one technician.

3−5.6.35.1 Equipment and Tools Required.

1. Screwdriver set, flat−tip

2. Multimeter

3. Flashlight

3−5.6.35.2 Initial Conditions/Preliminary Setup.

1. At the Generator Shelter Main PDP UD10A2, set circuit breaker CB7, Louvers & Fans to **OFF**.

3−5.6.35.3 Removal/Replacement Procedure.

WARNING

Failure to perform the preliminary setup can cause damage to equipment and serious injury or **DEATH**.

1. Remove cover from thermostat by loosening screw and pulling off cover.

2. Using a multimeter, verify there is no AC voltage on terminals screws.

3. Tag and disconnect wires from terminal screws.

4. Remove screws securing thermostat to junction box.

5. Obtain replacement thermostat.

CAUTION

Do not dent or deform the sensing bulb of this control. A dent or deformation will change the calibration and cause the control to cycle at a temperature lower than the dial setting.

6. Remove cover from thermostat by loosening screw and pulling cover off. Remove any packing and shipping pads.

7. Pull thermostat wires through opening.

8. Using tags as guides, connect wires to proper terminal screws and push excess wire into wall outlet box.

9. At the Generator Shelter Main PDP UD10A2, set circuit breaker to CB7, Louvers & Fans to **ON**.

10. Perform an operational check per Table 3−5.

3−5.6.36 Accessory Control Panel UD10A1A1−1 Removal/Replacement.

1. This procedure requires two technicians.

2. This procedure replaces the entire Accessory Panel Assembly which normally would not be done because the entire assembly is not a stocked item, but is provided in case the need arises. The internal components such as T1, T2, K1, K2, K3, S1, and TB4 can be obtained individually and replaced. Refer to those paragraphs for the replacement procedure.

3−5.6.36.1 Equipment and Tools Required.

1. Screwdriver set, Phillips−tip

2. Screwdriver set, flat−tip

3. Socket wrench set, 1/4″ drive

4. Flashlight

3−5.6.36.2 Initial Conditions/Preliminary Setup.

CAUTION

This procedure will turn off the Main Disconnect Switch UD10S1 in the generator shelter which will remove all power to the RDA shelter and the TPMS shelter. Ensure the RDA/RPG equipment and TPS system are properly shut down.

1. Perform the applicable RDA, RPG, and RBDDS equipment shutdown procedures per paragraph 3−5.4.
2. Perform TPS shutdown procedure per Table 2−8, steps 1 through 3.
3. On the generator control panel, set the RUN−STOP(RESET)−REMOTE switch to the **STOP** position.
4. On the generator control panel, observe that the red SWITCH OFF indicator flashes on and off continuously.
5. On the generator control panel, push the emergency stop button **IN**.
6. On the left side of the diesel generator, set the generator power disconnect circuit breaker to the **OFF** position.
7. Set the utility power Main Disconnect Switch UD10S1 to the **OFF** position.

3−5.6.36.3 Removal/Replacement Procedure.

WARNING

Failure to perform the preliminary setup can cause damage to equipment and serious injury or **DEATH**.

1. Open the door of the Auto−Transfer Switch Assembly UD10A1−1 and locate the Accessory Control Panel UD10A1A1−1 on the lower portion of the door.
2. On the Accessary Control Panel UD10A1A1−1, set the Motor Disconnect Switch S1 to the **Off** position.
3. Disconnect J1, J2, and J3 which are located on the right side of the accessory control panel.
4. Using the proper screwdriver, remove and set aside the two holding screws located on the right side of the accessory control panel.
5. Using the proper socket, remove and set aside the two outermost nuts located on the left side of the accessory control panel. Hold the accessory control panel in place while doing this procedure.
6. Set aside the front panel of the accessory control panel.
7. Using the proper screwdriver and/or the proper socket, remove and tag all the leads from T1, T2, K1, K2, and K3, the terminal block (TB4), and GND.
8. Using the proper socket, remove and set aside the holding nuts and washers.
9. Set aside the rear panel of the accessory control panel.
10. Using the proper socket, secure the new accessory control panel by inserting and tightening the four holding nuts and washers which were set aside in step 8.

11. Using the proper screwdriver and/or proper socket, untag and connect all the leads to T1, T2, K1, K2, and K3, the terminal block (TB4), and GND.
12. Using the proper socket, secure the front panel by inserting and tightening the two outermost holding nuts and washers which were set aside in step 5.
13. Using the proper screwdriver, secure the front panel by inserting and tightening the two holding screws and washers which were set aside in step 4.
14. Connect J1, J2, and J3 to the right side of the accessory control panel.
15. On the accessory control panel, set the Motor Disconnect Switch S1 to the **Auto** position.
16. Set the utility power Main Disconnect Switch UD10S1 to the **ON** position.
17. On the left side of the diesel generator, set the generator power disconnect circuit breaker to the **ON** position.
18. On the generator control panel, pull the emergency stop button **OUT**.
19. On the generator control panel, set the RUN−STOP(RESET)−REMOTE switch to the **REMOTE** position.
20. Perform TPS power−up procedure per Table 2−9, steps 4 through 9.
21. Perform the applicable RDA, RPG, and RBDDS equipment startup procedures per paragraph 3−5.5.

3−5.6.37 Relay, Accessory Control Panel UD10A1A1K1−1 through UD10A1A1K3−1 Removal/Replacement.

This procedure requires two technicians.

3−5.6.37.1 Equipment and Tools Required.

1. Screwdriver, Phillips−tip
2. Socket wrench set, 1/4” drive
3. Multimeter
4. Flashlight

3−5.6.37.2 Initial Conditions/Preliminary Setup.

CAUTION

This procedure will turn off the Main Disconnect Switch UD10S1 in the generator shelter which will remove all power to the RDA shelter and the TPMS shelter. Ensure the RDA/RPG equipment and TPS system are properly shut down.

1. Perform the applicable RDA, RPG, and RBDDS equipment shutdown procedures per paragraph 3−5.4.
2. Perform TPS shutdown procedure per Table 2−8, steps 1 through 3.
3. On the generator control panel, set the RUN−STOP(RESET)−REMOTE switch to the **STOP** position.
4. On the generator control panel, observe that the red SWITCH OFF indicator flashes on and off continuously.
5. On the generator control panel, push the emergency stop button **IN**.
6. On the left side of the diesel generator, set the generator power disconnect circuit breaker to the **OFF** position.
7. Set the utility power Main Disconnect Switch UD10S1 to the **OFF** position.

3−5.6.37.3 Removal/Replacement Procedure.

WARNING

Failure to perform the preliminary setup can cause damage to equipment and serious injury or **DEATH**.

1. Open the door of the Auto−Transfer Switch Assembly UD10A1−1 and locate Accessory Control Panel UD10A1A1−1 on the lower portion of the door.
2. Using the proper screwdriver, remove and set aside the two holding screws located on the right side of the accessory control panel.
3. Using the proper socket, remove and set aside the outermost nuts and washers located on the left side of the accessory control panel. Hold the accessory control panel cover while doing this procedure.
4. Set aside the accessory control panel cover.
5. Using the multimeter, verify there is no AC voltage across Transformer T1 terminals H3 and H4.
6. Using the proper screwdriver, remove the single screw on the left side of the relay to be replaced. Set screw aside.
7. With the screw removed, grasp the relay case and pull it to the left to free the relay tab on the right side from a slot in the accessory control panel back plate.
8. Tag and disconnect the wires from the relay. An alternate method, if the wires are long enough, is transfer the wires one−at−a−time from the defective relay to the new relay.
9. Reconnect the wires to the new relay.

10. Insert the relay tab on the right side into the slot on the accessory control panel back plate.

11. Secure the relay with the screw removed in step 6.

12. Install the accessory control panel front cover. Secure cover with the nuts and washers on the left side and the two screws on the right side. Tighten the nuts and screws.

13. Close the door of the Auto−Transfer Switch Assembly.

14. Set the utility power Main Disconnect Switch UD10S1 to the **ON** position.

15. On the left side of the diesel generator, set the generator power disconnect circuit breaker to the **ON** position.

16. On the generator control panel, pull the emergency button **OUT**.

17. On the generator control panel, set the RUN−STOP(RESET)−REMOTE switch to the **REMOTE** position.

18. Perform a generator transfer test to ensure the new relay functions.

19. Perform TPS power−up procedure per Table 2−9, steps 4 through 9.

20. Perform the applicable RDA, RPG, and RBDDS equipment startup procedures per paragraph 3−5.5.

3−5.6.38 Transformer, Accessory Control Panel UD10A1A1T1−1 and UD10A1A1T2−1 Removal/Replacement.

This procedure requires two technicians.

3−5.6.38.1 Equipment and Tools Required.

1. Screwdriver set, Phillips−tip

2. Screwdriver set, flat−tip

3. Socket wrench set, 1/4” drive

4. Multimeter

5. Flashlight

3−5.6.38.2 Initial Conditions/Preliminary Setup.

CAUTION

This procedure will turn off the Main Disconnect Switch UD10S1 in the generator shelter which will remove all power to the RDA shelter and the TPMS shelter. Ensure the RDA/RPG equipment and TPS system are properly shut down.

1. Perform the applicable RDA, RPG, and RBDDS equipment shutdown procedures per paragraph 3−5.4.
2. Perform TPS shutdown procedure per Table 2−8, steps 1 through 3.
3. On the generator control panel, set the RUN−STOP(RESET)−REMOTE switch to the **STOP** position.
4. On the generator control panel, observe that the red SWITCH OFF indicator flashes on and off continuously.
5. On the generator control panel, push the emergency stop button **IN**.
6. On the left side of the diesel generator, set the generator power disconnect circuit breaker to the **OFF** position.
7. Set the utility power Main Disconnect Switch UD10S1 to the **OFF** position.

3−5.6.38.3 Removal/Replacement Procedure.

WARNING

Failure to perform the preliminary setup can cause damage to equipment and serious injury or **DEATH**.

1. Open the door of the Auto−Transfer Switch Assembly UD10A1−1 and locate Accessory Control Panel UD10A1A1−1 on the lower portion of the door.
2. Using the proper screwdriver, remove and set aside the two holding screws located on the right side of the accessory control panel.
3. Using the proper socket, remove and set aside the outermost nuts and washers located on the left side of the accessory control panel. Hold the accessory control panel cover while doing this procedure.
4. Set aside the accessory control panel cover.
5. Using a multimeter, verify there is no AC voltage across terminals H3 and H4.
6. Tag and disconnect the wires connected to the terminals of the transformer to be replaced using the proper screwdriver.

7. With the proper socket, remove the four screws securing the transformer to the accessory control panel back plate.

8. Mount the new transformer to the accessory control panel back plate using the four screws removed in previous step.

9. Reconnect the wires to the new transformer terminals and tighten screws.

10. Set the utility power Main Disconnect Switch UD10S1 to the **ON** position.

11. Verify the new transformer is good. Using a multimeter, measure the AC voltage across terminals H3 and H4 for 208 Vac and across terminals X1 and X2 for 28 Vac. If transformer T2 was replaced, the generator will have to be started to measure the voltages.

12. Install the accessory control panel front cover. Secure cover with the nuts and washers on the left side and the two screws on the right side. Tighten the nuts and screws.

13. Close the door of the Auto−Transfer Switch Assembly.

14. On the left side of the diesel generator, set the generator power disconnect circuit breaker to the **ON** position.

15. On the generator control panel, pull the emergency button **OUT**.

16. On the generator control panel, set the RUN−STOP(RESET)−REMOTE switch to the **REMOTE** position.

17. Perform TPS power−up procedure per Table 2−9, steps 4 through 9.

18. Perform the applicable RDA, RPG, and RBDDS equipment startup procedures per paragraph 3−5.5.

3−5.6.39 Signal Module UD10A1A2−1 Removal/Replacement.

This procedure requires two technicians.

3−5.6.39.1 Equipment and Tools Required.

1. Screwdriver set, Phillips−tip

2. Screwdriver set, flat−tip

3. ESD Component Handling Kit

4. ESD Conductive Bag

5. Flashlight

3−5.6.39.2 Initial Conditions/Preliminary Setup.

CAUTION

This procedure will turn off the Main Disconnect Switch UD10S1 in the generator shelter which will remove all power to the RDA shelter and the TPMS shelter. Ensure the RDA/RPG equipment and TPS system are properly shut down.

1. Perform the applicable RDA, RPG, and RBDDS equipment shutdown procedures per paragraph 3−5.4.
2. Perform TPS shutdown procedure per Table 2−8, steps 1 through 3.
3. On the generator control panel, set the RUN−STOP(RESET)−REMOTE switch to **STOP**.
4. On the generator control panel, observe that the red SWITCH OFF indicator flashes on and off continuously.
5. On the generator control panel, push the emergency stop button **IN**.
6. On the left side of the diesel generator, set the generator power disconnect circuit breaker to the **OFF** position.
7. Set the utility power Main Disconnect Switch UD10S1 to the **OFF** position.

3−5.6.39.3 Removal/Replacement Procedure.

WARNING

Failure to perform the preliminary setup can cause damage to equipment and serious injury or **DEATH**.

ESD **CAUTION** **ESD**

All WSR−88D circuit cards are electrostatic sensitive devices which require special handling.

1. Attach ESD wrist strap to wrist and connect clip−lead to chassis frame.
2. Have ESD bag or mat ready.
3. Open the door of the Auto−Transfer Switch Assembly UD10A1−1 and locate the Signal Module UD10A1A2−1.
4. Remove connector J21 which is located on the left side of the signal module.
5. Using the proper screwdriver, remove the four module holding screws and washers while holding the signal module in place.

6. While holding the signal module circuit card, set aside the signal module cover.
7. Remove connector J20 which is located atop the signal module circuit card.
8. Place the defective signal module circuit card onto a conductive bag or mat.
9. Connect connector J20 to new signal module circuit card and hold in place.
10. Install the new signal module (circuit card and cover) using the proper screwdriver.
11. Connect connector J21 to the new signal module.
12. Set the DELAY/NO DELAY switch to **NO DELAY**.
13. Set the time delay to 0 seconds.
14. Remove ESD wrist strap.
15. Close Auto−Transfer Switch Assembly door.
16. Set the utility power Main Disconnect Switch UD10S1 to the **ON** position.
17. On the left side of the diesel generator, set the generator power disconnect circuit breaker to the **ON** position.
18. On the generator control panel, pull the emergency stop button **OUT**.
19. On the generator control panel, switch the RUN−STOP(RESET)−REMOTE switch to the **REMOTE** position.
20. Perform TPS power−up procedure per Table 2−9, steps 4 through 9.
21. Place the signal module circuit card into a conductive bag to turn in.
22. Perform the applicable RDA, RPG, and RBDDS equipment startup procedures per paragraph 3−5.5.

3−5.6.40 Exerciser Clock UD10A1A3−1 Removal/Replacement.

This procedure requires two technicians.

3−5.6.40.1 Equipment and Tools Required.

1. Screwdriver set, flat−tip
2. Screwdriver set, Phillips−tip
3. Flashlight

3−5.6.40.2 Initial Conditions/Preliminary Setup.

CAUTION

This procedure will turn off the Main Disconnect Switch UD10S1 in the generator shelter which will remove all power to the RDA shelter and the TPMS shelter. Ensure the RDA/RPG equipment and TPS systems are properly shut down.

1. Perform the applicable RDA, RPG, and RBDDS equipment shutdown procedures per paragraph 3−5.4.
2. Perform TPS shutdown procedure per Table 2−8, steps 1 through 3.
3. On the generator control panel, set the RUN−STOP(RESET)−REMOTE switch to the **STOP** position.
4. On the generator control panel, observe that the red SWITCH OFF indicator flashes on and off continuously.
5. On the generator control panel, push the emergency stop button **IN**.
6. On the left side of the diesel generator, set the generator power disconnect circuit breaker to the **OFF** position.
7. Set the utility power Main Disconnect Switch UD10S1 to the **OFF** position.

3−5.6.40.3 Removal/Replacement Procedure.

WARNING

Failure to perform the preliminary setup can cause damage to equipment and serious injury or **DEATH**.

1. Open the door of the Auto−Transfer Switch Assembly UD10A1−1 and locate the Exerciser Clock UD10A1A3−1.
2. Remove and set aside the plastic front cover of the exerciser clock to access the two holding screws.
3. Using the proper screwdriver, remove and set aside the two holding screws.
4. Remove the exerciser clock by pulling it straight out and set it aside.
5. Remove the terminal block cover to gain access to the terminal block and set it aside.
6. Using the proper screwdriver, disconnect and tag the four terminal leads.
7. Using the proper screwdriver, remove and set aside the exerciser clock back plate by removing the two holding screws and washers.

8. Using the proper screwdriver, install the new exerciser clock back plate by inserting and tightening the two holding screws.
9. Remove tags and connect the four terminal leads to the terminal block.
10. Install the new terminal block cover over the terminal block.
11. Insert the new exerciser clock into place.
12. Using the proper screwdriver, insert and tighten the two holding screws.
13. Set the utility power Main Disconnect Switch UD10S1 to the **ON** position.
14. At the lower left of the Exerciser Clock, set the slide switch to the middle position (clock face symbol ⌚).

NOTE

To set time of day and day of week, perform steps 15 through 20.

15. Press **R** button with ball point pen to reset memory.
16. Press ⌚ (Clock) button to display time (24 hour clock).
17. Press **h** (hour) button to set hours reading.
18. Press **m** (minute) button to set minutes reading.
19. Press **1−7** button to set up DAY OF WEEK indicator bar. One (1) represents Sunday and each successive number represents succeeding days.
20. Press **Pr** button to enter time into memory.

NOTE

To set the generator exercise start and stop time required by the site policy, refer to EHB 6−551−11, Section 2.

21. Install the plastic cover over the front of the exerciser clock.
22. Close the door of the Auto−Transfer Switch Assembly.
23. On the left side of the diesel generator, set the generator power disconnect circuit breaker to the **ON** position.
24. On the generator control panel, pull the emergency stop button **OUT**.
25. On the generator control panel, set the RUN−STOP(RESET)−REMOTE switch to the **REMOTE** position.
26. Perform TPS power−up procedure per Table 2−9, steps 4 through 9.
27. Perform the applicable RDA, RPG, and RBDDS equipment startup procedures per paragraph 3−5.5.

3−5.6.41 Power Sentry Motherboard UD10A1A4−1 Removal/Replacement.

This procedure requires two technicians.

3−5.6.41.1 Equipment and Tools Required.

1. Screwdriver set, flat−tip
2. Screwdriver set, Phillips−tip
3. Flashlight
4. ESD Component Handling Kit

3−5.6.41.2 Initial Conditions/Preliminary Setup.

CAUTION

This procedure will turn off the Main Disconnect Switch UD10S1 in the generator shelter which will remove all power to the RDA shelter and the TPMS shelter. Ensure the RDA/RPG equipment and TPS system are properly shut down.

1. Perform the applicable RDA, RPG, and RBDDS equipment shutdown procedures per paragraph 3−5.4.
2. Perform TPS shutdown procedure per Table 2−8, steps 1 through 3.
3. On the generator control panel, set the RUN−STOP(RESET)−REMOTE switch to the **STOP** position.
4. On the generator control panel, observe that the red SWITCH OFF indicator flashes on and off continuously.
5. On the generator control panel, push the emergency button **IN**.
6. On the left side of the diesel generator, set the generator power disconnect circuit breaker to the **OFF** position.
7. Set the utility power Main Disconnect Switch UD10S1 to the **OFF** position.

3−5.6.41.3 Removal/Replacement Procedure.

WARNING

Failure to perform the preliminary setup can cause damage to equipment and serious injury or **DEATH**.

1. Open the door of the Auto−Transfer Switch Assembly UD10A1−1 and locate the Power Sentry Module UD10A1A4−1.

ESD **CAUTION** **ESD**

All WSR−88D printed circuit cards are electrostatic sensitive devices which require special handling.

2. Attach ESD wrist strap to wrist and connect clip−lead to cabinet frame.
3. Remove the power sentry module cover by removing the four holding screws and washers while holding the cover in place. Set cover and screws aside.
4. Disconnect J7 and J8 located on the right side of the PCB assembly motherboard.
5. Disconnect J4 located on the left side of the motherboard.
6. Disconnect J6 located at the bottom of the motherboard.
7. While holding the motherboard in place, use the proper screwdriver to remove the two holding screws and washers located at the bottom of the motherboard and the two holding screws and washers located near the middle of the motherboard.
8. Set the defective motherboard removed in step 7 on an ESC conductive bag or mat.

NOTE

There are two versions of the motherboard P/N 300−4069 and P/N 300−3090, with the most notable difference being the number of With/Without Load switches in the upper left hand corner. Ensure the new motherboard is configured like the defective board and that the three circuit cards mounted to the motherboard have been removed and installed in the exact slots on the new motherboard.

9. Compare the new motherboard to the defective board and ensure the With/Without Load switch(es) is/are set as on the removed defective board and that the two 3PH/1PH switches are set to the 3PH (3 phase) position. At sites with a TPMS, the With/Without Load switches should be set to With Load (up) position.
10. Remove the three circuit cards mounted on the defective motherboard, one at a time, starting from left to right, and install them in the same slot on the new motherboard.
11. Install the new motherboard. While holding the motherboard in place, insert the two screws and washers at the bottom of the motherboard and the two screws and washer at the middle of the board. Tighten the screws with the proper screwdriver.
12. Connect J7 and J8 located on the right side of the motherboard.
13. Connect J4 located on the left side of the motherboard.

14. Connect the ribbon cable to J6 located at the bottom of the motherboard.

15. Using the proper screwdriver, install the power sentry module cover by inserting and tightening four holding screws and washers.

16. Remove ESD wrist strap.

17. Close the door of the Auto−Transfer Switch Assembly.

18. Set the utility power Main Disconnect Switch UD10S1 to the **ON** position.

19. On the left side of the diesel generator, set the generator power disconnect circuit breaker to the **ON** position.

20. On the generator control panel, pull the emergency stop button **OUT**.

21. On the generator control panel, switch the RUN−STOP(RESET)−REMOTE switch to the **REMOTE** position.

22. Perform a generator transfer test to ensure the new motherboard functions.

23. Perform TPS power−up procedure per Table 2−9, steps 4 through 9.

24. Perform the applicable RDA, RPG, and RBDDS equipment startup procedure per paragraph 3−5.5.

3−5.6.42 Power Sentry PCB (Source 1 Voltage Sensing Module UD10A1A4A1−1, Source 2 Voltage Sensing Module UD10A1A4A3−1, and Timer Delay Module UD10A1A4A2−1) Removal/Replacement.

NOTE

This procedure is used to remove and replace any of the three printed circuit boards plugged into the Power Sentry UD10A1A4−1 motherboard. The Source 1 Voltage Sensing Module (VSM) monitors normal commercial power and is located on the left, while the Source 2 VSM monitors generator voltage and is located on the right. The Time Delay PCB is between the two VSM's.

This procedure requires two technicians.

3−5.6.42.1 Equipment and Tools Required.

1. Screwdriver set, Phillips−tip

2. Screwdriver set, flat−tip

3. Multimeter

4. ESD Component Handling Kit

3−5.6.42.2 Initial Conditions/Preliminary Setup.

CAUTION

This procedure will turn off the Main Disconnect Switch UD10S1 in the generator shelter which will remove all power to the RDA shelter and the TPMS shelter. Ensure the RDA/RPG equipment and TPS system are properly shut down.

1. Perform the applicable RDA, RPG, and RBDDS equipment shutdown procedures per paragraph 3−5.4.
2. Perform TPS shutdown procedure per Table 2−8, steps 1 through 3.
3. On the generator control panel, set the RUN−STOP(RESET)−REMOTE switch to the **STOP** position.
4. On the generator control panel, observe that the red SWITCH OFF indicator flashes on and off continuously.
5. On the generator control panel, push the emergency stop button **IN**.
6. On the left side of the diesel generator, set the generator power disconnect circuit breaker to the **OFF** position.
7. Set the utility power Main Disconnect Switch UD10S1 to the **OFF** position.

3−5.6.42.3 Removal/Replacement Procedure.

WARNING

Failure to perform the preliminary setup can cause damage to equipment and serious injury or **DEATH**.

1. Open the door of the Auto−Transfer Switch Assembly UD10A1−1 and locate the Power Sentry Module mounted to the swing−out door in the upper right corner.

ESD **CAUTION** **ESD**

All WSR−88D circuit cards are electrostatic sensitive devices which require special handling.

2. Attach ESD wrist strap to wrist and connect clip−lead to chassis frame.
3. Remove the power sentry module cover by remove the four holding screws and washers while holding the cover in place. Set cover and screws aside.
4. Remove the circuit card identified to be defective by grasping the card and pulling it straight out. Set the defective card on an ESD bag/mat.

5. Install the new circuit card, with components facing to the right, and push the card into the card slot holder.

6. Install the power sentry cover and secure with the four screws and washers removed previously.

7. Remove the ESD wrist strap.

WARNING

The Motor Disconnect Switch S1 on the Accessory Control Panel must be in the Off position prior to making any adjustments within the Power Sentry Module to prevent accidental actuation of the linear motor within the contactor switch assembly.

8. On the Accessory Control Panel UD10A1A1−1 at the bottom right of the door, set the Motor Disconnect Switch S1 to the **Off** position.

9. Set the utility power Main Disconnect Switch UD10S1 to the **ON** position.

NOTE

The following alignment procedures for the three circuit cards are extracted from NWS EHB 6−551−12, Section 4, Setup and Calibration.

10. Refer to the appropriate step, depending on which circuit card is being aligned as follows:

    - Source 1 (Utility power) Voltage Sensing Module UD10A1A4A1−1. Aligned using normal utility power source. Refer to step a.
    - Source 2 (Generator power) Voltage Sensing Module UD10A1A4A3−1. Aligned with generator on−line without load. Refer to step b.
    - Time Delay Module UD10A1A4A2−1. Refer to step c.

    a. Source 1 Voltage Sensing Module UD10A1A4A1−1 for utility power. This card is the most far left of the three cards on the motherboard.

        1) Set the Undervoltage Pickup % of Nominal potentiometer fully **clockwise**.

        2) Set the Undervoltage Dropout % of Pickup potentiometer fully **clockwise**.

        3) Set the Undervoltage Cal potentiometer fully **clockwise**. The Source 1 Available lamp should turn on. If not, continue.

        4) Set the Overvoltage Dropout % of Nominal potentiometer fully **clockwise**.

5) Set the Overvoltage Cal potentiometer fully **clockwise**. The Source 1 Available lamp should be on now if not previously turned on in Step 3 above.

6) Adjust the Undervoltage Cal potentiometer **counterclockwise** until the Source 1 Available lamp turns off.

7) Slowly adjust the Undervoltage Cal potentiometer **clockwise** until the Source 1 Available lamp just turns on again.

8) Set the Overvoltage Dropout % of Nominal potentiometer fully **counterclockwise**.

9) Set the Overvoltage Delay (seconds) potentiometer fully **counterclockwise**.

10) Adjust the Overvoltage Cal potentiometer **counterclockwise** until the Source 1 Available lamp turns off.

11) Slowly adjust the Overvoltage Cal potentiometer **clockwise** until the Source 1 Available lamp just turns on again.

12) Set the Undervoltage Pickup % of Nominal potentiometer to 91%.

13) Set the Undervoltage Dropout % of Pickup potentiometer to 89%.

14) Set the Overvoltage Dropout % of Nominal potentiometer to 111%.

15) Set the Overvoltage Delay (Seconds) potentiometer to 0 seconds.

16) Set the Frequency Bandwidth % of Nominal potentiometer to 5%.

17) Set the Frequency Delay (Seconds) potentiometer to 0 seconds.

18) The Source 1 Voltage Sensing Module should now be calibrated.

19) On the Accessory Control Panel UD10A1A1−1, set the Motor Disconnect Switch S1 to the **Auto** position.

b. Source 2 Voltage Sensing Module UD10A1A4A3−1 for generator power. This card is the most far right of the three cards on the motherboard.

1) On the left side of the diesel generator, set the generator power disconnect circuit breaker to the **ON** position.

2) On the generator control panel, pull the emergency button **OUT**.

WARNING

Wear hearing protection near the generator while it is in operation.
Hearing loss can occur from prolonged exposure to high noise.

3) On the generator control panel, set the RUN−STOP(RESET)−REMOTE switch to the **RUN** position to start the generator.

NOTE

The Source 2 Voltage Sensing Module should be aligned with the generator on and no load to get the card in the “ballpark”, then rechecked on−line with load to finalize the alignment.

4) Verify that 208 Vac is present on all phases. This voltage will probably be several volts high due to a no load condition. The voltage must be at 208 Vac for calibration of the Source 2 Voltage Sensing Module. If necessary, adjust the voltage control on the generator control panel for 208 Vac.

5) Repeat steps 10.a.1 through 17, substituting Source 2 for Source 1 to align the Source 2 Voltage Sensing Module (card on the far right).

6) The Source 2 Voltage Sensing Module should now be calibrated.

7) On the Accessory Control Panel UD10A1A1−1, set the Motor Disconnect Switch S1 to the **Auto** position.

8) Set the Power Sentry Module With/Without Load switch(es) to With Load, then set the Test/Normal/Retransfer switch on the front of the Auto−Transfer Switch door to Test to place the generator under load. Recheck the 208 Vac. If necessary, adjust the voltage control on the generator control panel.

9) Set the Test/Normal/Retransfer switch on the front of the Auto−Transfer Switch door to Normal to initiate the transfer back to normal utility power. The generator will shut down after preset time delays.

10) Proceed to step 13.

c. Time Delay Module UD10A1A4A2−1.

1) Set the Start Delay (Seconds) potentiometer to 3 seconds.

2) Set the Stop Delay (Minutes) potentiometer to 8 minutes.

3) Set the Retransfer Delay (Minutes) potentiometer to 10 minutes.

4) Set the Transfer Delay (Seconds) potentiometer to 10 seconds.

5) This completes the alignment of the Time Delay Module.

6) On the Accessory Control Panel UD10A1A1−1, set the Motor Disconnect Switch S1 to the **Auto** position.

7) Perform a generator transfer to ensure the new circuit card functions.

11. On the left side of the diesel generator, set the generator power disconnect circuit breaker to the **ON** position.

12. On the generator control panel, pull the emergency stop button **OUT**.

13. On the generator control panel, switch the RUN−STOP(RESET)−REMOTE switch to the **REMOTE** position.

14. Perform TPS power−up procedure per Table 2−9, steps 4 through 9.

15. Perform the applicable RDA, RPG, and RBDDS equipment startup procedures per paragraph 3−5.5.

3−5.6.43 Battery Charger (Onan) UD10A1A6−1 Removal/Replacement.

This procedure requires two technicians.

3−5.6.43.1 Equipment and Tools Required.

1. Socket wrench set, 3/8″ drive

2. Wrench set, adjustable

3−5.6.43.2 Initial Conditions/Preliminary Setup.

CAUTION

This procedure will turn off the Main Disconnect Switch UD10S1 in the generator shelter which will remove all power to the RDA shelter and the TPMS shelter. Ensure the RDA/RPG equipment and TPS system are properly shut down.

1. Perform the applicable RDA, RPG, and RBDDS equipment shutdown procedures per paragraph 3−5.4.

2. Perform TPS shutdown procedure per Table 2−8, steps 1 through 3.

3. On the generator control panel, switch the RUN−STOP(RESET)−REMOTE switch to the **STOP** position.

4. On the generator control panel, observe that the red SWITCH OFF indicator flashes on and off continuously.

5. On the generator control panel, push the emergency stop button I**N**.

6. On the left side of the diesel generator, set the generator power disconnect circuit breaker to the **OFF** position.

7. Set the utility power Main Disconnect Switch UD10S1 to the **OFF** position.

3−5.6.43.3 Removal/Replacement Procedure.

WARNING

Failure to perform the preliminary setup can cause damage to equipment and serious injury or **DEATH**.

1. Open the door of the Auto−Transfer Switch Assembly UD10A1−1 and locate the Battery Charger UD10A1A6−1.
2. Remove the connector located atop the battery charger.
3. Remove connector J2 located on the front of the battery charger.
4. Using the proper socket and/or adjustable wrench, remove and set aside the four nuts and washers which hold the battery charger to the Auto−Transfer Switch door.
5. Remove the battery charger and set aside.
6. Mount the new battery charger on the screw studs and install the nuts and washers.
7. Using the proper socket and/or adjustable wrench, secure the new battery charger by tightening the four nuts and washers which were set aside in step 4.
8. Reconnect the connector which is located atop the battery charger.
9. Reconnect connector J2 located on the front of the battery charger.
10. Set utility power Main Disconnect Switch UD10S1 to the **ON** position.
11. On the left side of the diesel generator, set the generator power disconnect circuit breaker to the **ON** position.
12. On the generator control panel, pull the emergency stop button **OUT**.
13. On the generator control panel, switch the RUN−STOP(RESET)−REMOTE switch to the **REMOTE** position.

NOTE

The adjustments on the battery charger are factory set. However, if the battery shows signs of being overcharged or undercharged, the float voltage can be adjusted. Refer to NWS EHB 6−551−13, Section 2.

14. On Battery Charger UD10A1A6−1, verify that the following indications exist:
    - AC Failure LED OFF
    - HI Battery LED OFF
    - LO Battery LED OFF
    - DC Amperes meter is oscillating at approximately 60 Hz.
15. Close the door of the Auto−Transfer Switch Assembly.
16. Perform TPS power−up procedure per Table 2−9, steps 4 through 9.

17. Perform the applicable RDA, RPG, and RBDDS equipment startup procedures per paragraph 3−5.5.

3−5.6.44 Program Transition Module UD10A1A8−1 Removal/Replacement.

This procedure requires two technicians.

3−5.6.44.1 Equipment and Tools Required.

1. Screwdriver set, Phillips−tip
2. Screwdriver set, flat−tip
3. ESD Component Handling Kit
4. ESD conductive bag
5. Flashlight

3−5.6.44.2 Initial Conditions/Preliminary Setup.

CAUTION

This procedure will turn off the Main Disconnect Switch UD10S1 in the generator shelter which will remove all power to the RDA shelter and the TPMS shelter. Ensure the RDA/RPG equipment and TPS system are properly shut down.

1. Perform the applicable RDA, RPG, and RBDDS equipment shutdown procedures per paragraph 3−5.4.
2. Perform TPS shutdown procedure per Table 2−8, steps 1 through 3.
3. On the generator control panel, set the RUN−STOP(RESET)−REMOTE switch to **STOP**.
4. On the generator control panel, observe that the red SWITCH OFF indicator flashes on and off continuously.
5. On the generator control panel, push the emergency stop button **IN**.
6. On the left side of the diesel generator, set the generator power disconnect circuit breaker to **OFF**.
7. Set the utility power Main Disconnect Switch UD10S1 to the **OFF** position.

3−5.6.44.3 Removal/Replacement Procedure.

WARNING

Failure to perform the preliminary setup can cause damage to equipment and serious injury or **DEATH**.

1. Open the door of the Auto−Transfer Switch Assembly UD10A1−1 and locate the Program Transition Module UD10A1A8−1.

ESD **CAUTION** **ESD**

All WSR−88D circuit cards are electrostatic sensitive devices which require special handling.

2. Attach ESD wrist strap to wrist and connect clip−lead to chassis frame.
3. Have conductive bag or mat ready.
4. Remove connector J30 located on the left side of the program transition module.
5. Remove the program transition module circuit card and the program transition module cover by removing the four module holding screws and washers using the proper screwdriver.
6. Place the program transition module circuit card onto a conductive bag or mat.
7. Install the new program transition module circuit card and the program transition module cover by inserting and tightening the four screws with associated washers using the proper screwdriver.
8. Connect connector J30 to the new program transition module.
9. Set the DELAY/NO DELAY switch to **DELAY**.
10. Set the time delay to mid−range (approximately 3 seconds).
11. Remove ESD wrist strap.
12. Close Auto−Transfer Switch Assembly door.
13. Set the utility power Main Disconnect Switch UD10S1 to the **ON** position.
14. On the left side of the diesel generator, set the generator power disconnect circuit breaker to the **ON** position.
15. On the generator control panel, pull the emergency stop button **OUT**.
16. On the generator control panel, switch the RUN−STOP(RESET)−REMOTE switch to **REMOTE**.
17. Place the program transition module circuit card into a conductive bag to turn in.
18. Perform TPS power−up procedure per Table 2−9, steps 4 through 9.
19. Perform a generator transfer test to ensure the new program transition module functions.
20. Perform the applicable RDA, RPG, and RBDDS equipment startup procedures per paragraph 3−5.5.

3−5.6.45 Power Sentry Transformer PCB Assembly UD10A1A9−1 Removal/Replacement

This procedure requires two technicians.

3−5.6.45.1 Equipment and Tools Required.

1. Screwdriver set, Phillips−tip
2. Screwdriver set, flat−tip

3−5.6.45.2 Initial Conditions/Preliminary Setup.

CAUTION

This procedure will turn off the Main Disconnect Switch UD10S1 in the generator shelter which will remove all power to the RDA shelter and the TPMS shelter. Ensure the RDA/RPG equipment and TPS system are properly shut down.

1. Perform the applicable RDA, RPG, and RBDDS equipment shutdown procedures per paragraph 3−5.4.
2. Perform TPS shutdown procedure per Table 2−8, steps 1 through 3.
3. On the generator control panel, set the RUN−STOP(RESET)−REMOTE switch to the **STOP** position.
4. On the generator control panel, observe that the red SWITCH OFF indicator flashes on an off continuously.
5. On the generator control panel, push the emergency stop button **IN**.
6. On the left side of the diesel generator, set the generator power disconnect circuit breaker to the **OFF** position.
7. Set the utility power Main Disconnect Switch UD10S1 to the **OFF** position.

3−5.6.45.3 Removal/Replacement Procedure.

WARNING

Failure to perform the preliminary setup can cause damage to equipment and serious injury or **DEATH**.

NOTE

The Transformer PCB Assembly is located under the cover of the Power Sentry Module.

1. Open the door of the Auto−Transfer Switch Assembly UD10A1−1 and locate the Power Sentry Module UD10A1A4−1.

2. Using the proper screwdriver, remove and set aside the four holding screws and washers holding the power sentry module cover in place.

3. Set aside the power sentry module cover.

4. Disconnect the ribbon cable from J6 at the top of the transformer PCB.

5. Using the proper screwdriver, remove and tag the terminal leads from the terminal board at the bottom of the transformer PCB.

6. While holding the transformer PCB in place, use the proper screwdriver to remove the three holding screws and washers located at the top of the transformer PCB and the one holding screw and washer located at the bottom of the transformer PCB.

7. Set aside the transformer PCB removed in step 6.

8. Install the new transformer PCB. While holding the transformer PCB in place, insert the four screws and washers removed in step 6 and tighten the screws.

9. Untag and reconnect the terminal leads to the terminal board at the bottom of the transformer PCB.

10. Reconnect the ribbon cable to J6 at the top of the transformer PCB.

11. Install the power sentry module cover with the four screws and washers and tighten.

12. Close the door of the Auto−Transfer Switch Assembly.

13. Set the utility power Main Disconnect Switch UD10S1 to the **ON** position.

14. On the left side of the diesel generator, set the generator power disconnect circuit breaker to the **ON** position.

15. On the generator control panel, pull the emergency button **OUT**.

16. On the generator control panel, set the RUN−STOP(RESET)−REMOTE switch to the **REMOTE** position.

17. Perform a generator transfer test to ensure the transformer PCB functions.

18. Perform TPS power−up procedure per Table 2−9, steps 4 through 9.

19. Perform the applicable RDA, RPG, and RBDDS equipment startup procedures per paragraph 3−5.5.

3−5.6.46 Relay, Time Delay (Onan) UD10A1TD1 (K1) Removal/Replacement.

This procedure requires two technicians.

3−5.6.46.1 Equipment and Tools Required.

1. Flashlight

3−5.6.46.2 Initial Conditions/Preliminary Setup.

CAUTION

This procedure will turn off the Main Disconnect Switch UD10S1 in the generator shelter which will remove all power to the RDA shelter and the TPMS shelter. Ensure the RDA/RPG equipment and TPS system are properly shut down.

1. Perform the applicable RDA, RPG, and RBDDS equipment shutdown procedures per paragraph 3−5.4.
2. Perform TPS shutdown procedure per Table 2−8, steps 1 through 3.
3. On the generator control panel, switch the RUN−STOP(RESET)−REMOTE switch to the **STOP** position.
4. On the generator control panel, observe that the red SWITCH OFF indicator flashes on and off continuously.
5. On the generator control panel, push the emergency stop button **IN**.
6. On the left side of the diesel generator, set the generator power disconnect circuit breaker to the **OFF** position.
7. Set the utility power Main Disconnect Switch UD10S1 to the **OFF** position.

3−5.6.46.3 Removal/Replacement Procedure.

WARNING

Failure to perform the preliminary setup can cause damage to equipment and serious injury or **DEATH**.

1. Open the door of the Auto−Transfer Switch Assembly UD10A1−1 and locate the time delay relay UD10A1TD1 (K1) in the upper left corner of the cabinet.
2. Note the time setting indicated on the top of the relay.
3. Pull the time delay relay from the relay terminal socket and set aside.
4. Insert the new TD1 relay into the relay terminal socket. Verify the relay is pushed all the way into the socket.
5. Set the time delay to the setting noted in step 2 by turning the dial located on the top of the relay. The standard delay is 6 seconds.

6. Close the door of the Auto−Transfer Switch Assembly.
7. Set the utility power Main Disconnect Switch UD10S1 to the **ON** position.
8. On the left side of the diesel generator, set the generator power disconnect circuit breaker to the **ON** position.
9. On the generator control panel, pull the emergency stop button **OUT**.
10. On the generator control panel, switch the RUN−STOP(RESET)−REMOTE switch to the **REMOTE** position.
11. Perform TPS power−up procedure per Table 2−9, steps 4 through 9.
12. Perform a generator transfer test to ensure the new TD1 relay functions.
13. Perform the applicable RDA, RPG, and RBDDS equipment startup procedures per paragraph 3−5.5.

3−5.6.47 Relay, Auxiliary Contacts (Normal/Emergency Alarm/Control) UD10A1K2−1 and UD10A1K3−1 Removal/Replacement.

This procedure requires two technicians.

3−5.6.47.1 Equipment and Tools Required.

1. Flashlight

3−5.6.47.2 Initial Conditions/Preliminary Setup.

CAUTION

This procedure will turn off the Main Disconnect Switch UD10S1 in the generator shelter which will remove all power to the RDA shelter and the TPMS shelter. Ensure the RDA/RPG equipment and TPS system are properly shut down.

1. Perform the applicable RDA, RPG, and RBDDS equipment shutdown procedures per paragraph 3−5.4.
2. Perform TPS shutdown procedure per Table 2−8, steps 1 through 3.
3. On the generator control panel, switch the RUN−STOP(RESET)−REMOTE switch to the **STOP** position.
4. On the generator control panel, observe that the red SWITCH OFF indicator flashes on and off continuously.
5. On the generator control panel, push the emergency stop button **IN**.
6. On the left side of the diesel generator, set the generator power disconnect circuit breaker to the **OFF** position.

7. Set the utility power Main Disconnect Switch UD10S1 to the **OFF** position.

3−5.6.47.3 Removal/Replacement Procedure.

WARNING

Failure to perform the preliminary setup can cause damage to equipment and serious injury or **DEATH**.

1. Open the door of the Auto−Transfer Switch Assembly UD10A1−1 and locate the relay to be replaced in the upper left corner of the cabinet.
2. Pull the relay from the relay terminal socket and set aside (either UD10A1K2−1 or UD10A1K3−1).
3. Insert the new relay into the relay terminal socket. Ensure the relay is pushed all the way into the terminal socket.
4. Close the door of the Auto−Transfer Switch Assembly.
5. Set the utility power Main Disconnect Switch UD10S1 to the **ON** position.
6. On the left side of the diesel generator, set the generator power disconnect circuit breaker to the **ON** position.
7. On the generator control panel, pull the emergency stop button **OUT**.
8. On the generator control panel, switch the RUN−STOP(RESET)−REMOTE switch to the **REMOTE** position.
9. Perform TPS power−up procedure per Table 2−9, steps 4 through 9.
10. Verify the new relay solved the problem.
11. Perform the applicable RDA, RPG, and RBDDS equipment startup procedures per paragraph 3−5.5.

3−5.6.48 Relay, Auto/Manual Transfer Control UD10A1K7 (Onan) Removal/Replacement.

This procedure requires two technicians.

3−5.6.48.1 Equipment and Tools Required.

1. Flashlight

3−5.6.48.2 Initial Conditions/Preliminary Setup.

CAUTION

This procedure will turn off the Main Disconnect Switch UD10S1 in the generator shelter which will remove all power to the RDA shelter and the TPMS shelter. Ensure the RDA/RPG equipment and TPS system are properly shut down.

1. Perform the applicable RDA, RPG, and RBDDS equipment shutdown procedures per paragraph 3−5.4.
2. Perform TPS shutdown procedure per Table 2−8, steps 1 through 3.
3. On the generator control panel, switch the RUN−STOP(RESET)−REMOTE switch to the **STOP** position.
4. On the generator control panel, observe that the red SWITCH OFF indicator flashes on and off continuously.
5. On the generator control panel, push the emergency stop button **IN**.
6. On the left side of the diesel generator, set the generator power disconnect circuit breaker to the **OFF** position.
7. Set the utility power Main Disconnect Switch UD10S1 to the **OFF** position.

3−5.6.48.3 Removal/Replacement Procedure.

WARNING

Failure to perform the preliminary setup can cause damage to equipment and serious injury or **DEATH**.

1. Open the door of the Auto−Transfer Switch Assembly UD10A1−1 and locate Relay UD10A1K7 on the left−side wall of the auto−transfer switch cabinet.
2. Pull the defective relay from the relay terminal socket.
3. Insert the new relay into the relay terminal socket.
4. Close the door of the Auto−Transfer Switch Assembly.
5. Set the utility power Main Disconnect Switch UD10S1 to the **ON** position.
6. On the left side of the diesel generator, set the generator power disconnect circuit breaker to the **ON** position.
7. On the generator control panel, pull the emergency button **OUT**.
8. On the generator control panel, set the RUN−STOP(RESET)−REMOTE switch to the **REMOTE** position.

9. Perform a generator transfer test to ensure the relay functions if K3−1 was replaced.
10. Perform TPS power−up procedure per Table 2−9, steps 4 through 9.
11. Perform the applicable RDA, RPG, and RBDDS equipment startup procedures per paragraph 3−5.5.

3−5.6.49 Microcontroller Assembly UD10A1A1 Removal/Replacement.

This procedure requires two technicians.

3−5.6.49.1 Equipment and Tools Required.

1. Screwdriver set, Phillips−tip
2. Screwdriver set, flat−tip
3. Socket wrench set, 1/4″ drive
4. Flashlight
5. ESD Component Handling Kit

3−5.6.49.2 Initial Conditions/Preliminary Setup.

CAUTION

This procedure will turn off the Main Disconnect Switch UD10S1 in the generator shelter which will remove all power to the RDA shelter and the TPMS shelter. Ensure the RDA/RPG equipment and TPS system are properly shut down.

1. Perform the applicable RDA, RPG, and RBDDS equipment shutdown procedures per paragraph 3−5.4.
2. Perform TPS shutdown procedure per Table 2−8, steps 1 through 3.
3. On the generator control panel, set the RUN−OFF/RESET−AUTO switch to **OFF**.
4. On the generator control panel, observe that the GENERATOR SWITCH NOT IN AUTO indicator illuminates.
5. On the generator control panel, push the emergency stop button **IN**.
6. Set utility power Main Disconnect Switch UD10S1 to the **OFF** position.

3−5.6.49.3 Removal/Replacement Procedure.

WARNING

Failure to perform the preliminary setup can cause damage to equipment and serious injury or **DEATH**.

1. Open the door of the Auto−Transfer Switch Assembly UD10A1 and locate the Microcontroller Assembly UD10A1A1 on the upper portion of the door.

ESD **CAUTION** **ESD**

All WSR−88D printed circuit cards are electrostatic sensitive devices which require special handling.

2. Attach ESD wrist strap to wrist and connect clip−lead to cabinet chassis.
3. Remove four screws, washers, and standoffs securing the plastic cover plate to the Microcontroller Assembly.

NOTE

The ribbon cables connected to P2 and P4 at the top of the Microcontroller Assembly Power Supply UD10A1A1PS1 board do not have to be disconnected if replacing the entire Microcontroller Assembly UD10A1A1.

4. Tag and disconnect the wires connected to the terminal boards on both sides of the Microcontroller Assembly Power Supply UD10A1A1PS1 board.
5. At the lower left of the Microcontroller Assembly Power Supply UD10A1A1PS1 board, disconnect the wiring harness connector connected to P1.
6. At the bottom corner of the Microcontroller Assembly Power Supply UD10A1A1PS1 board, disconnect the ribbon cable from P14.
7. Using the proper socket, remove the nuts on the top right and bottom right corners of the Microcontroller Assembly Power Supply UD10A1A1PS1 board that secure the plastic wire bundle strain reliefs and set aside.
8. Using the proper socket, remove the five nuts and washers that secure the Load Shed Assembly cover plate located beneath the Microcontroller Assembly Power Supply UD10A1A1PS1 board to gain access to screws securing the Microcontroller Assembly.
9. Remove seven screws and washers securing Microcontroller Assembly to front door. Set assembly on protective ESD bag or mat.
10. Compare and ensure the terminal jumpers on the new Microcontroller Assembly are exactly the same as the removed assembly.
11. Install replacement Microcontroller Assembly and secure to front door using seven screws and washers previously removed.
12. Using tags as guide, reconnect wires to the Microcontroller Assembly Power Supply terminal boards.
13. Reattach the plastic wire bundle strain reliefs to the top right and bottom right corners of the board and tighten nuts.

14. Reconnect the wiring harness connector to P1 at lower left of board.
15. Reconnect the ribbon cable to P14 at the center of the board.
16. Install the Load Shed Assembly cover plate beneath the Microcontroller Assembly Power Supply board and tighten the five nuts.
17. Install standoffs previously removed to new assembly and secure cover plate to standoffs using four screws and washers.
18. Remove ESD wrist strap.
19. Close Auto−Transfer Switch Assembly door.
20. Set the utility power Main Disconnect Switch UD10S1 to the **ON** position.
21. Program the Control Panel Index numbers using the procedures in the Kohler commercial manual, NWS EHB 6−552 or AF TO 31P1−4−108−221, starting with the Off/monitor Mode and continuing to the Local/programming Mode sections.
22. On the generator control panel, rotate the emergency stop button 1/4 turn clockwise until the button pops out.
23. On the generator control panel, set the RUN−OFF/RESET−AUTO switch to the **AUTO** position.
24. Perform TPS power−up procedure per Table 2−9, steps 4 through 9.
25. Perform the applicable RDA, RPG, and RBDDS equipment startup procedures per paragraph 3−5.5.

3−5.6.50 Contactor Assembly UD10A1A2 (Generator Shelter) Removal/Replacement.

This procedure requires two technicians.

3−5.6.50.1 Equipment and Tools Required.

1. Socket wrench set, 1/4″ drive
2. Screwdriver set, flat−tip
3. Flashlight

3−5.6.50.2 Initial Conditions/Preliminary Setup.

CAUTION

This procedure will turn off the Main Disconnect Switch UD10S1 in the generator shelter which will remove all power to the RDA shelter and the TPMS shelter. Ensure the RDA/RPG equipment and TPS system are properly shut down.

1. Perform the applicable RDA, RPG, and RBDDS equipment shutdown procedures per paragraph 3−5.4.
2. Perform TPS shutdown procedure per Table 2−8, steps 1 through 3.
3. On the generator control panel, set the RUN−OFF/RESET−AUTO switch to **OFF**.
4. On the generator control panel, observe that the GENERATOR SWITCH NOT IN AUTO indicator illuminates.
5. On the generator control panel, push the emergency stop button **IN**.
6. Set the utility power Main Disconnect Switch UD10S1 to the **OFF** position.

3−5.6.50.3 Removal/Replacement Procedure.

WARNING

Failure to perform the preliminary setup can cause damage to equipment and serious injury or **DEATH**.

1. Open the door of the Auto−Transfer Switch Assembly UD10A1 and locate the Contactor Assembly UD10A1A2 on the back panel.
2. Tag and disconnect power cables from their contactor lugs.
3. Tag and disconnect wires from the coil kit and contacts located on the left of the contactor assembly.
4. Disconnect harness from Microcontroller Assembly UD10A1A1P1.
5. Remove four carriage bolts, washers, lock washers, and retainers securing Contactor Assembly to back panel.
6. Obtain new Contactor Assembly and secure to back panel with four carriage bolts, washers, lock washers, and retainers.
7. Connect harness to Microcontroller Assembly UD10A1A1P1.
8. Using tags as guide, reconnect wires to coil kit and contacts located on the left of the Contactor Assembly.
9. Using tags as guide, reconnect power cables to contactor lugs.
10. Close Auto−Transfer Switch Assembly door.
11. Set the utility power Main Disconnect Switch UD10S1 to **ON**.
12. On the generator control panel, rotate the emergency stop button 1/4 turn clockwise until button pops out.

13. On the generator control panel, set the RUN−OFF/RESET−AUTO switch to **AUTO**.

14. Perform TPS power−up procedure per Table 2−9, steps 4 through 9.

15. Perform the applicable RDA, RPG, and RBDDS equipment startup procedures per paragraph 3−5.5.

3−5.6.51 3−Phase Voltage Sensing Module PCB UD10A1A3 Removal/Replacement.

This procedure requires two technicians.

3−5.6.51.1 Equipment and Tools Required.

1. Screwdriver set, flat−tip
2. Nutdriver set or socket wrench set, 3/8” drive
3. Wire cutters
4. Tie−wraps (4 each)
5. Spade lugs, open faced (size red) (3 each)
6. Spade lug crimping tool
7. Flashlight

3−5.6.51.2 Initial Conditions/Preliminary Setup.

CAUTION

This procedure will turn off the Main Disconnect Switch UD10S1 in the generator shelter which will remove all power to the RDA shelter and the TPMS shelter. Ensure the RDA/RPG equipment and TPS system are properly shut down.

1. Perform the applicable RDA, RPG, and RBDDS equipment shutdown procedures per paragraph 3−5.4.

2. Perform TPS shutdown procedure per Table 2−8, steps 1 through 3.

3. On the generator control panel, switch the RUN−OFF/RESET−AUTO switch to **OFF**.

4. On the generator control panel, observe that the GENERATOR SWITCH NOT IN AUTO indicator illuminates.

5. On the generator control panel, push the emergency button **IN**.

6. Set the utility power Main Disconnect Switch UD10S1 to the **OFF** position.

3−5.6.51.3 Removal/Replacement Procedure.

WARNING

Failure to perform the preliminary setup can cause damage to equipment and serious injury or **DEATH**.

1. Open the door of the Auto−Transfer Switch Assembly UD10A1.
2. Locate the 3−Phase Voltage Sensing Module PCB UD10A1A3 mounted in the cut−out of the microcontroller assembly.
3. Remove the plexiglass shield covering the microcontroller assembly by loosening the bottom two screws and removing the upper two screws. Set the plexiglass cover aside.
4. Locate the three wires attached to the bottom of the PCB. Follow the wires along the route to the microcontroller assembly terminal board TBAC1 on the left side and carefully cut any tie−wraps.
5. Verify that the wire attached to the EA connection on the 3−phase voltage sensing module PCB is connected to microcontroller assembly terminal board TBAC1, pin EA. Do the same thing for wires EB (to pin EB) and EC (to pin EC).
6. Disconnect the wires from the microcontroller assembly terminal board TBAC1 pins EA, EB, and EC.
7. Disconnect the ribbon cable connected to P15 at the top of the PCB.
8. Remove the four nuts securing the 3−phase voltage sensing module PCB using the proper size socket. Set the nuts aside.
9. Remove the 3−phase voltage sensing module PCB and set aside.
10. Install new 3−phase voltage sensing module PCB.
11. Secure the 3−phase voltage sensing module PCB with the four nuts and tighten.

NOTE

The new 3−phase voltage sensing module wires may not have spade lugs attached.

12. Check the wires attached to the new 3−phase voltage sensing module. If spade lugs are not attached on the free ends, attach the correct size lug to each wire.
13. Connect the wire attached to the 3−phase voltage sensing module connection EA to microcontroller board terminal board TBAC1, pin EA. Connect wire EB to terminal board pin EB. Connect wire EC to terminal board pin EC.

14. Secure wires with tie−wraps.
15. Connect the ribbon cable plug to P15 at the top of the PCB.
16. Install the plexiglass shield covering the microcontroller assembly and secure to stand−offs.
17. Close the door of the Auto−Transfer Switch Assembly .
18. Set the utility poser Main Disconnect Switch UD10S1 to the **ON** position.
19. On the generator control panel, rotate the emergency stop button 1/4 turn clockwise until the button pops out.
20. On the generator control panel, switch the RUN−OFF/RESET−AUTO switch to **AUTO**.
21. Perform TPS power−up procedure per Table 2−9, steps 4 through 9.
22. Perform the applicable RDA, RPG, and RBDDS equipment startup procedures per paragraph 3−5.5.

3−5.6.52 Relay PCB, Dry Contact UD10A1A4 and UD10A1A5 (DCK1/DCK2) Removal/Replacement.

This procedure requires two technicians.

3−5.6.52.1 Equipment and Tools Required.

1. Flashlight
2. Screwdriver set, flat−tip
3. Screwdriver set, Phillips−tip
4. ESD Component Handling Kit

3−5.6.52.2 Initial Conditions/Preliminary Setup.

CAUTION

This procedure will turn off the Main Disconnect Switch UD10S1 in the generator shelter which will remove all power to the RDA shelter and the TPMS shelter. Ensure the RDA/RPG equipment and TPS system are properly shut down.

1. Perform the applicable RDA, RPG, and RBDDS equipment shutdown procedures per paragraph 3−5.4.
2. Perform TPS shutdown procedure per Table 2−8, steps 1 through 3.
3. On the generator control panel, switch the RUN−OFF/RESET−AUTO switch to **OFF**.

4. On the generator control panel, observe that the GENERATOR SWITCH NOT IN AUTO indicator illuminates.

5. On the generator control panel, push the emergency stop button **IN**.

6. Set the utility power Main Disconnect Switch UD10S1 to the **OFF** position.

3−5.6.52.3 Removal/Replacement Procedure.

WARNING

Failure to perform the preliminary setup can cause damage to equipment and serious injury or **DEATH**.

1. Open the door of the Auto−Transfer Switch Assembly UD10A1.

ESD **CAUTION** **ESD**

All WSR−88D printed circuit cards are electrostatic sensitive devices which require special handling.

2. Attach ESD wrist strap on wrist and connect lead−clip to cabinet chassis.

3. Locate the Dry Contact Relay PCB UD10A1A4 (DCK1) or UD10A1A5 (DCK2) on the lower portion of the door panel.

4. Tag and disconnect wires connected to the dry contact relay PCB input and output terminal boards.

5. Remove four screws, washers, and spacers securing the dry contact relay PCB to the panel.

6. Install new dry contact relay PCB to panel using screws, washers, and spacers previously removed.

7. Using tags as guide, connect wires to the dry contact relay PCB terminal boards.

8. Remove ESD wrist strap.

9. Close the door of the Auto−Transfer Switch Assembly.

10. Set the utility power Main Disconnect Switch UD10S1 to the **ON** position.

11. On the generator control panel, rotate the emergency stop button 1/4 turn clockwise until button pops out.

12. On the generator control panel, switch the RUN−OFF/RESET−AUTO switch to **AUTO** position.

13. Perform TPS power−up procedure per Table 2−9, steps 4 through 9.

14. Perform the applicable RDA, RPG, and RBDDS equipment startup procedures per paragraph 3−5.5.

3−5.6.53 Battery Charger (Kohler) UD10A1A6 Removal/Replacement.

This procedure requires two technicians.

3−5.6.53.1 Equipment and Tools Required.

1. Flashlight
2. Screwdriver set, flat−tip
3. Screwdriver set, Phillips
4. Multimeter

3−5.6.53.2 Initial Conditions/Preliminary Setup.

CAUTION

This procedure will turn off the Main Disconnect Switch UD10S1 in the generator shelter which will remove all power to the RDA shelter and the TPMS shelter. Ensure the RDA/RPG equipment and TPS system are properly shut down.

1. Perform the applicable RDA, RPG, and RBDDS equipment shutdown procedures per paragraph 3−5.4.
2. Perform TPS shutdown procedure per Table 2−8, steps 1 through 3.
3. On the generator control panel, switch the RUN−OFF/RESET−AUTO switch to **OFF**.
4. On the generator control panel, observe that the GENERATOR SWITCH NOT IN AUTO indicator illuminates.
5. On the generator control panel, push the emergency stop button **IN**.
6. Set the utility power Main Disconnect Switch UD10S1 to the **OFF** position.

3−5.6.53.3 Removal/Replacement Procedure.

WARNING

Failure to perform the preliminary setup can cause damage to equipment and serious injury or **DEATH**.

1. Open the door of the Auto−Transfer Switch Assembly UD10A1.
2. Locate the Battery Charger UD10A1A6 on the lower portion of the door panel.

3. At the bottom of the battery charger, remove the protective barrier/cover to gain access to the terminal board.

4. Using a multimeter, verify there is no AC voltage on the AC terminals.

5. Tag and disconnect the wires from the battery charger terminal board.

6. Remove four screws securing battery charger to spacers on door panel.

NOTE

The new battery charger may mount to the door panel differently than the assembly just removed. The older style battery charger used 4−inch long screws that traveled through the battery charger housing. The newer style battery charger has mounting tabs at the rear of the battery charger and only required 1/2−inch long screws.

7. Install new battery charger and secure to spacers with new screws.

8. Using tags as guide, connect wires to battery charger terminal board.

NOTE

The voltage adjustment is factory set and should not need adjustment.

9. Close the door of the Auto−Transfer Switch Assembly.

10. Set the utility power Main Disconnect Switch UD10S1 to the **ON** position.

11. On the generator control panel, rotate the emergency stop button 1/4 turn clockwise until button pops out.

12. On the generator control panel, switch the RUN−OFF/RESET−AUTO switch to **AUTO**.

13. Perform paragraph 3−3.2.3.3 for appropriate diesel generator (Onan or Kohler) to check operation of new battery charger.

14. Perform TPS power−up procedure per Table 2−9, steps 4 through 9.

15. Perform the applicable RDA, RPG, and RBDDS equipment startup procedures per paragraph 3−5.5.

3−5.6.54 Load Shed PCB UD10A1A7 Removal/Replacement.

This procedure requires two technicians.

3−5.6.54.1 Equipment and Tools Required.

1. Screwdriver set, flat−tip

2. Nutdriver set or socket wrench set, 1/4” drive

3. Open−end/box−end wrench set or small adjustable wrench
4. ESD Component Handling Kit
5. Flashlight

3−5.6.54.2 Initial Conditions/Preliminary Setup.

CAUTION

This procedure will turn off the Main Disconnect Switch UD10S1 in the generator shelter which will remove all power to the RDA shelter and the TPMS shelter. Ensure the RDA/RPG equipment and TPS system are properly shut down.

1. Perform the applicable RDA, RPG, and RBDDS equipment shutdown procedures per paragraph 3−5.4.
2. Perform TPS shutdown procedure per Table 2−8, steps 1 through 3.
3. On the generator control panel, switch the RUN−OFF/RESET−AUTO switch to **OFF**.
4. On the generator control panel, observe that the GENERATOR SWITCH NOT IN AUTO indicator illuminates.
5. On the generator control panel, push the emergency button **IN**.
6. Set the utility power Main Disconnect Switch UD10S1 to the **OFF** position.

3−5.6.54.3 Removal/Replacement Procedure.

WARNING

Failure to perform the preliminary setup can cause damage to equipment and serious injury or **DEATH**.

1. Open the door of the Auto−Transfer Switch Assembly UD10A1.

ESD **CAUTION** **ESD**

All WSR−88D printed circuit cards are electrostatic sensitive devices which require special handling.

2. Attach ESD wrist strap on wrist and connect clip−lead to cabinet chassis.
3. Locate the Load Shed PCB UD10A1A7 mounted on the door panel directly below the microcontroller assembly.
4. Remove the plexiglass shield covering the microcontroller assembly by loosening the bottom two screws and removing the upper two screws. Set the plexiglass cover aside.

5. Remove the five nuts securing the Load Shed PCB Assembly UD10A1A7 metal cover using the proper size nutdriver or socket. Set the cover, nuts, and washers aside.

6. Disconnect the connector plug connected to P17 on the left side of the board. Use a small flat−tip screwdriver to loosen the connector plug securing screws.

7. Disconnect the ribbon cable connected to P11 on the right side of the board.

8. Loosen the four nuts securing the load shed PCB to the door panel using the proper size open−end wrench or small adjustable wrench. Remove nuts and any washers and set aside.

9. Remove load shed PCB and set on a protective ESD bag.

10. Install new load shed PCB.

11. Secure the load shed PCB with the four nuts and washer and tighten.

12. Connect the ribbon cable to P11 on right side of board.

13. Connect the connector plug to P17 on the left side of the board and tighten connector screws.

14. Install the load shed PCB assembly metal cover and secure with the five nuts and washers previously removed. Tighten nuts using a nutdriver or socket.

15. Install the plexiglass shield covering the microcontroller assembly and secure to stand−offs.

16. Remove ESD wrist strap.

17. Close the door of the Auto−Transfer Switch Assembly.

18. Set the utility power Main Disconnect Switch UD10S1 to the **ON** position.

19. On the generator control panel, rotate the emergency stop button 1/4 turn clockwise until the button pops out.

20. On the generator control panel, switch the RUN−OFF/RESET−AUTO switch to **AUTO**.

21. Perform TPS power−up procedures per Table 2−9, steps 4 through 9.

22. Perform the applicable RDA, RPG, and RBDDS equipment startup procedures per paragraph 3−5.5.

3−5.6.55 Relay Assembly (PCB), Dry Contact (10 Relay) UD10A1A8 (LSCK) Removal/Replacement.

This procedure requires two technicians.

3−5.6.55.1 Equipment and Tools Required.

1. Flashlight
2. Screwdriver set, flat−tip
3. Screwdriver set, Phillips−tip
4. ESD Component Handling Kit

3−5.6.55.2 Initial Conditions/Preliminary Setup.

CAUTION

This procedure will turn off the Main Disconnect Switch UD10S1 in the generator shelter which will remove all power to the RDA shelter and the TPMS shelter. Ensure the RDA/RPG equipment and TPS system are properly shut down.

1. Perform the applicable RDA, RPG, and RBDDS equipment shutdown procedures per paragraph 3−5.4.
2. Perform TPS shutdown procedure per Table 2−8, steps 1 through 3.
3. On the generator control panel, switch the RUN−OFF/RESET−AUTO switch to **OFF**.
4. On the generator control panel, observe that the GENERATOR SWITCH NOT IN AUTO indicator illuminates.
5. On the generator control panel, push the emergency stop button **IN**.
6. Set the utility power Main Disconnect Switch UD10S1 to the **OFF** position.

3−5.6.55.3 Removal/Replacement Procedure.

WARNING

Failure to perform the preliminary setup can cause damage to equipment and serious injury or **DEATH**.

1. Open the door of the Auto−Transfer Switch Assembly UD10A1.

ESD **CAUTION** **ESD**

All WSR−88D printed circuit cards are electrostatic sensitive devices which require special handling.

2. Attach ESD wrist strap on wrist and connect clip−lead to cabinet chassis.
3. Locate the LSCK Relay Assembly UD10A1A8 on the lower right portion of the door panel.

4. Tag and disconnect wires connected to the LSCK relay assembly terminal boards.
5. Remove six screws and washers securing relay assembly to spacers on panel.
6. Install new relay assembly and secure to spacers with six screws and washers.
7. Using tags as guide, connect wires to relay assembly terminal boards.
8. Remove ESD wrist strap.
9. Close the door of the Auto−Transfer Switch Assembly.
10. Set the utility power Main Disconnect Switch UD10S1 to the **ON** position.
11. On the generator control panel, rotate the emergency stop button 1/4 turn clockwise until button pops out.
12. On the generator control panel, switch the RUN−OFF/RESET−AUTO switch to **AUTO**.
13. Perform TPS power−up procedure per Table 2−9, steps 4 through 9.
14. Perform the applicable RDA, RPG, and RBDDS equipment startup procedures per paragraph 3−5.5.

3−5.6.56 Fuses UD10A1F1−F4 Removal/Replacement.

This procedure requires two technicians.

3−5.6.56.1 Equipment and Tools Required.

1. Flashlight

3−5.6.56.2 Initial Conditions/Preliminary Setup.

1. On the generator control panel, switch the RUN−OFF/RESET−AUTO switch to **OFF**.
2. On the generator control panel, observe that the GENERATOR SWITCH NOT IN AUTO indicator illuminates.
3. On the generator control panel, push the emergency stop button **IN**.

3−5.6.56.3 Removal/Replacement Procedure.

WARNING

Failure to perform the preliminary setup can cause damage to equipment and serious injury or **DEATH**.

1. Open the door of the Auto−Transfer Switch Assembly UD10A1.

2. Locate the fuse to be removed on the lower portion of the door panel.
3. Remove fuse holder from panel by sliding it out of the clip holder. Turn top of fuse holder counter−clockwise and remove defective fuse.
4. Install new fuse into fuse holder and secure back into clip holder.
5. Close the door of the Auto−Transfer Switch Assembly.
6. On the generator control panel, rotate the emergency stop button 14/ turn clockwise until button pops out.
7. On the generator control panel, switch the RUN−OFF/RESET−AUTO switch to **AUTO**.

3−5.6.57 Relay, Time Delay (Kohler) UD10A1TD1(K1) Removal/Replacement.

This procedure requires two technicians.

3−5.6.57.1 Equipment and Tools Required.

1. Flashlight

3−5.6.57.2 Initial Conditions/Preliminary Setup.

CAUTION

This procedure will turn off the Main Disconnect Switch UD10S1 in the generator shelter which will remove all power to the RDA shelter and the TPMS shelter. Ensure the RDA/RPG equipment and TPS system are properly shut down.

1. Perform the applicable RDA, RPG, and RBDDS equipment shutdown procedures per paragraph 3−5.4.
2. Perform TPS shutdown procedure per Table 2−8, steps 1 through 3.
3. On the generator control panel, switch the RUN−OFF/RESET−AUTO switch to **OFF**.
4. On the generator control panel, observe that the GENERATOR SWITCH NOT IN AUTO indicator illuminates.
5. On the generator control panel, push the emergency stop button **IN**.
6. Set the utility power Main Disconnect Switch UD10S1 to the **OFF** position.

3−5.6.57.3 Removal/Replacement Procedure.

WARNING

Failure to perform the preliminary setup can cause damage to equipment and serious injury or **DEATH**.

1. Open the door of the Auto−Transfer Switch Assembly UD10A1.
2. Locate the Time Delay Relay UD10A1TD1 on the lower portion of the door panel.
3. Slide the relay hold down strap off of TD1 and remove relay from socket connector.
4. Install new TD1 relay into relay socket. Verify that relay is pushed all the way into socket.
5. Adjust time delay knob on top of relay TD1 for 6 seconds.
6. Slide the relay hold down strap over relay.
7. Close the door of the Auto−Transfer Switch Assembly.
8. Set the utility power Main Disconnect Switch UD10S1 to the **ON** position.
9. On the generator control panel, rotate the emergency stop button 1/4 turn clockwise until the button pops out.
10. On the generator control panel, switch the RUN−OFF/RESET−AUTO switch to **AUTO**.
11. Perform relay checkout as per paragraph 3−6.7.
12. Perform TPS power−up procedure per Table 2−9, steps 4 through 9.
13. Perform the applicable RDA, RPG, and RBDDS equipment startup procedures per paragraph 3−5.5.

3−5.6.58 Relay, Voltage Sensing (VSR) UD10A1K2 Removal/Replacement.

This procedure requires two technicians.

3−5.6.58.1 Equipment and Tools Required.

1. Flashlight
2. Screwdriver set

3−5.6.58.2 Initial Conditions/Preliminary Setup.

CAUTION

This procedure will turn off the Main Disconnect Switch UD10S1 in the generator shelter which will remove all power to the RDA shelter and the TPMS shelter. Ensure the RDA/RPG equipment and TPS system are properly shut down.

1. Perform the applicable RDA, RPG, and RBDDS equipment shutdown procedures per paragraph 3−5.4.

2. Perform TPS shutdown procedure per Table 2−8, steps 1 through 3.
3. On the generator control panel, switch the RUN−OFF/RESET−AUTO switch to **OFF**.
4. On the generator control panel, observe that the GENERATOR SWITCH NOT IN AUTO indicator illuminates.
5. On the generator control panel, push the emergency stop button **IN**.
6. Set the utility power Main Disconnect Switch UD10S1 to the **OFF** position.

3−5.6.58.3 Removal/Replacement Procedure.

WARNING

Failure to perform the preliminary setup can cause damage to equipment and serious injury or **DEATH**.

1. Open the door of the Auto−Transfer Switch Assembly UD10A1.
2. Locate the Voltage Sensing Relay (VSR) UD10A1K2 on the lower portion of the door panel.
3. Note the position of the potentiometer setting on the top of the VSR.
4. Slide the relay hold down strap off of VSR and remove relay from socket connector.
5. Install new VSR into relay socket. Verify that relay is pushed all the way into socket.
6. Set the potentiometer to the same setting noted in step 3.
7. Slide the relay hold down strap over relay.
8. Close the door of the Auto−Transfer Switch Assembly.
9. Set the utility power Main Disconnect Switch UD10S1 to the **ON** position.
10. On the generator control panel, rotate the emergency stop button 1/4 turn clockwise until button pops out.
11. On the generator control panel, switch the RUN−OFF/RESET−AUTO switch to **AUTO**.
12. Perform TPS power−up procedure per Table 2−9, steps 4 through 9.
13. Perform the applicable RDA, RPG, and RBDDS equipment startup procedures per paragraph 3−5.5.

3−5.6.59 Relay UD10A1K3−K7 Removal/Replacement.

This procedure requires two technicians.

3−5.6.59.1 Equipment and Tools Required.

1. Screwdriver set, Phillips−tip
2. Screwdriver set, flat−tip
3. Flashlight

3−5.6.59.2 Initial Conditions/Preliminary Setup.

CAUTION

This procedure will turn off the Main Disconnect Switch UD10S1 in the generator shelter which will remove all power to the RDA shelter and the TPMS shelter. Ensure the RDA/RPG equipment and TPS system are properly shut down.

1. Perform the applicable RDA, RPG, and RBDDS equipment shutdown procedures per paragraph 3−5.4.
2. Perform TPS shutdown procedure per Table 2−8, steps 1 through 3.
3. On the generator control panel, switch the RUN−OFF/RESET−AUTO switch to the **OFF** position.
4. On the generator control panel, observe that the GENERATOR SWITCH NOT IN AUTO indicator illuminates.
5. On the generator control panel, push the emergency stop button **IN**.
6. Set the utility power Main Disconnect Switch UD10S1 to the **OFF** position.

3−5.6.59.3 Removal/Replacement Procedure.

WARNING

Failure to perform the preliminary setup can cause damage to equipment and serious injury or **DEATH**.

1. Open the door of the Auto−Transfer Switch Assembly UD10A1 and locate relays UD10A1K3−K7.
2. Locate the relay to be replaced.
3. Slide the relay hold down strap off the relay to be removed and remove relay from socket connector. If relay K4 is to be replaced, a new style relay will be issued with settings of 0−6, which represents 0 to 60 seconds.
4. Install new relay into relay socket. Verify relay is pushed all the way into socket. If K4 was replaced, set new time delay setting to 30 seconds.

5. Slide the relay hold down strap over relay.
6. Close the door of the Auto−Transfer Switch Assembly.
7. Set the utility power Main Disconnect Switch UD10S1 to the **ON** position.
8. On the generator control panel, rotate the emergency stop button 1/4 turn clockwise until button pops out.
9. On the generator control panel switch the RUN−OFF/RESET−AUTO switch to **AUTO**.
10. Perform a generator transfer test to verify new relay functions.
11. Perform TPS power−up procedure per Table 2−9, steps 4 through 9.
12. Perform the applicable RDA, RPG, and RBDDS equipment startup procedure per paragraph 3−5.5.

3−5.6.60 Transformer UD10A1T1−T3 Removal/Replacement.

This procedure requires two technicians.

3−5.6.60.1 Equipment and Tools Required.

1. Flashlight
2. Screwdriver set, flat−tip
3. Screwdriver set, Phillips−tip
4. Tie−wraps

3−5.6.60.2 Initial Conditions/Preliminary Setup.

CAUTION

This procedure will turn off the Main Disconnect Switch UD10S1 in the generator shelter which will remove all power to the RDA shelter and the TPMS shelter. Ensure the RDA/RPG equipment and TPS system are properly shut down.

1. Perform the applicable RDA, RPG, and RBDDS equipment shutdown procedures per paragraph 3−5.4.
2. Perform TPS shutdown procedure per Table 2−8, steps 1 through 3.
3. On the generator control panel, switch the RUN−OFF/RESET−AUTO switch to **OFF**.
4. On the generator control panel, observe that the GENERATOR SWITCH NOT IN AUTO indicator illuminates.

5. On the generator control panel, push the emergency stop button **IN**.
6. Set the utility power Main Disconnect Switch UD10S1 to the **OFF** position.

3−5.6.60.3 Removal/Replacement Procedure.

WARNING

Failure to perform the preliminary setup can cause damage to equipment and serious injury or **DEATH**.

1. Open the door of the Auto−Transfer Switch Assembly UD10A1.
2. Locate the transformer to be removed.
3. Tag and disconnect wires from terminal board for transformer to be removed.
4. Remove two screws, washers, and nuts securing transformer to panel.
5. Install new transformer and secure with two screws, washers, and nuts.
6. Route writes to terminal board with existing wire runs and secure with tie−wraps.
7. Using tags as guide, connect wires from new transformer to applicable terminal board.
8. Close the door of the Auto−Transfer Switch Assembly.
9. Set the utility power Main Disconnect Switch UD10S1 to the **ON** position.
10. On the generator control panel, rotate the emergency stop button 1/4 turn clockwise until button pops out.
11. On the generator control panel, switch the RUN−OFF/RESET−AUTO switch to **AUTO**.
12. Perform TPS power−up procedure per Table 2−9, steps 4 through 9.
13. Perform the applicable RDA, RPG, and RBDDS equipment startup procedures per paragraph 3−5.5.

3−5.6.61 Damper Motor Actuator UD11A1B1 Removal/Replacement.

This procedure requires two technicians. For component location, refer to NWS EHB 6−501, IPB Manual.

3−5.6.61.1 Equipment and Tools Required.

1. Socket set, 3/8″ drive
2. Screwdriver set, flat−tip
3. Wrench set, adjustable

4. Multimeter

3−5.6.61.2 Initial Conditions/Preliminary Setup.

1. Obtain control from the MSCF, place the transmitter in standby, and remove high voltage by performing RDA equipment shutdown procedures per paragraph 3−5.4, steps 1, 2, and 4.

2. On the RDA Maintenance Panel UD5A2, set the PEDESTAL ELECTRONICS POWER SWITCH to **OFF**.

3. Place a SAFETY WARNING tag on the RDA Maintenance Panel UD5A2.

4. On the RDA Main PDP UD7A2, set the Radome Vent circuit breaker CB17 to **OFF**.

5. In the Radome, set the antenna pedestal PWR ON/SAFE safety interlock switch to **SAFE**.

3−5.6.61.3 Removal/Replacement Procedure.

WARNING

Failure to perform the preliminary setup can cause damage to equipment and serious injury or **DEATH**.

1. In the Radome, remove the floor grate and mesh screen by removing its holding screws using the proper socket.

2. Remove the cover from the damper motor (actuator) by loosening the two holding screws using the proper screwdriver.

3. Using a multimeter, verify there is no AC voltage on terminals L1 and L2.

4. Disconnect the two leads from L1 and L2 using the proper screwdriver.

5. Loosen the screw which holds the flex conduit in place using the proper screwdriver and pull out the flex conduit.

6. Disconnect the actuating arm from the motor shaft by removing the nut using the appropriate large adjustable wrench.

7. Remove the damper motor (actuator) by removing its holding screws using the proper screwdriver.

8. Install the new damper motor (actuator) by inserting and tightening its holding screws using the proper screwdriver.

9. Connect the actuating arm to the motor shaft by tightening the nut using the appropriate large adjustable wrench.

10. Insert the flex conduit into place and tighten the screw using the proper screwdriver.

11. Connect the two leads to L1 and L2 using the proper screwdriver.

12. Install the cover to the damper motor (actuator) by tightening the two holding screws using the proper screwdriver.

13. Install the mesh screen and floor grate by inserting and tightening its holding screws using the proper socket.

14. Have the second technician descend tower to apply power to Radome vent system. On the RDA Main PDP UD7A2, set the Radome Vent circuit breaker CB17 to **ON**.

15. Set the Radome Vent Thermostat UD2S2 to a setting that is lower than the ambient temperature of the radome. The vent fan should turn on and damper actuator should open the vent louvers.

16. Verify the new damper actuator opens fully and moves freely without binding or excessive noise.

17. Return the Radome Vent Thermostat UD2S2 to original setting (normally 85° F). The vent fan turns off and the damper should close.

18. Set the antenna pedestal PWR ON/SAFE safety interlock switch to **PWR ON** before descending to the RDA shelter.

19. On the RDA Maintenance Panel UD5A2, set the PEDESTAL ELECTRONICS POWER switch to **ON**. Remove the Safety Warning Tag.

20. At the RDA Systems Console * prompt, enter **RDAUP <Enter>**.

21. Using the mouse, click on the Applications screen or press **<Alt>** and **<Tab>** keys to place the cursor on the Applications command line.

22. Restore the transmitter high voltage, place the system in the operate mode, and return control to the RPG by performing the RDA equipment startup procedures per paragraph 3−5.5, steps 4 and 5.

3−5.6.62 Vent Fan Assembly UD11A2 Removal/Replacement.

This procedure requires two technicians. For component location refer to NWS EHB 6−501, IPB Manual.

3−5.6.62.1 Equipment and Tools Required.

1. Socket wrench set, 3/8″ drive

2. Screwdriver set, flat−tip

3. Wrench set, adjustable

4. Pliers set
5. Multimeter
6. Safety Harness and positioning lanyard

3−5.6.62.2 Initial Conditions/Preliminary Setup.

1. Obtain control from the MSCF, place the transmitter in standby, and remove high voltage by performing RDA equipment shutdown procedures per paragraph 3−5.4, steps 1, 2, and 4.
2. On the RDA Maintenance Panel UD5A2, set the PEDESTAL ELECTRONICS POWER switch of **OFF**.
3. Place a SAFETY WARNING tag on the RDA Maintenance Panel UD5A2.
4. On the RDA Main PDP UD7A2, set the Radome Vent circuit breaker CB17 to **OFF**.
5. In the Radome, set the antenna pedestal PWR ON/SAFE safety interlock switch to **SAFE**.

3−5.6.62.3 Removal/Replacement Procedure.

WARNINGS

Failure to use safety equipment can cause severe injury or **DEATH** by impact with the surface below. Ensure all personnel are clear of the area below. Properly secure the safety harness prior to performing any maintenance tasks.

Failure to perform the preliminary setup can cause damage to equipment and serious injury or **DEATH**.

1. Don the safety harness and secure lanyard to secure anchor point.
2. In the radome, remove the floor grate and mesh screen using the proper socket.
3. Remove the vent assembly cover using the proper socket.
4. Remove the motor wiring access cover screws using the proper screwdriver.
5. Remove the two electrical screw caps from the connections in the motor wiring assembly.
6. Using a multimeter, verify there is no AC voltage on the wires.
7. Tag and remove the two motor leads using the pliers.
8. Remove the ground lead from the wiring assembly chassis using the proper screwdriver.

9. Remove the flex conduit from the wiring assembly chassis by loosening its locking screw using the proper screwdriver.

10. Pull the conduit along with the two motor leads and the ground lead from the motor wiring assembly.

11. Remove the holding screws from the base of the vent fan assembly using the proper socket.

12. Pull the vent fan assembly out while guiding the flex conduit out of the assembly. Place the vent fan assembly on the floor of the Radome.

13. Lower the new vent fan assembly into place while guiding the flex conduit into the assembly.

14. Secure the new vent assembly by inserting and tightening its holding screws using the proper socket.

15. Route the two motor leads and the ground lead to the motor wiring assembly.

16. Insert the flex conduit into the wiring assembly chassis and tighten the locking screws using the proper screwdriver.

17. Install the ground lead to the wiring assembly chassis using the proper screwdriver.

18. Untag and connect the two motor leads using the pliers.

19. Install the two electrical screw caps to the connections in the motor wiring assembly.

20. Install the motor wiring access cover by inserting and tightening its holding screws using the proper screwdriver.

21. Install the vent fan assembly cover by inserting and tightening the holding screws using the proper socket.

22. Install the mesh screen and floor grate by inserting and tightening the holding screws using the proper socket.

23. Have second technician descend tower to apply power to Radome vent system. On the RDA Main PDP, set Radome Vent circuit breaker CB17 to **ON**.

24. Set the Radome Vent Thermostat UD2S2 to a setting that is lower than the ambient temperature of the radome. The vent fan should turn on and damper actuator should open the vent louvers.

25. Verify the new vent fan turns on and operates normally without excessive noise.

26. Return the Radome Vent Thermostat UD2S2 to original setting (normally 85°F). The vent fan turns off and the damper should close.

27. Set the antenna pedestal PWR ON/SAFE safety interlock switch to **PWR ON** before descending to the RDA shelter.

28. On the RDA Maintenance Panel UD5A2, set the PEDESTAL ELECTRONICS POWER switch to **ON**. Remove SAFETY WARNING tag.

29. At the RDA Systems Console * prompt, enter **RDAUP <Enter>**.

30. Using the mouse, click on the Applications screen or press **<Alt>** and **<Tab>** keys to place the cursor on the Applications command line.

31. Restore the transmitter high voltage, place the system in the operate mode, and return control to the RPG by performing the RDA equipment startup procedures per paragraph 3−5.5, steps 4 and 5.

3−5.6.63 Motor, Radome Fan UD11A2B1 Removal/Replacement.

This procedure requires two technicians. For component location, refer to NWS EHB 6−501, IPB Manual.

3−5.6.63.1 Equipment and Tools Required.

1. Socket wrench set, 3/8″ drive
2. Screwdriver set, flat−tip
3. Wrench set, adjustable
4. Pliers
5. Pin punch set
6. Hammer
7. Multimeter
8. Safety Harness and positioning lanyard

3−5.6.63.2 Initial Conditions/Preliminary Setup.

1. Obtain control from the MSCF, place the transmitter in standby, and remove high voltage by performing RDA equipment shutdown procedures per paragraph 3−5.4, steps 1, 2, and 4.

2. On the RDA Maintenance Panel UD5A2, set the PEDESTAL ELECTRONICS POWER switch to **OFF**.

3. Place a SAFETY WARNING tag on the RDA Maintenance Panel UD5A2.

4. On the RDA Main PDP UD7A2, set the Radome Vent circuit breaker CB17 to **OFF**.

5. In the Radome, set the antenna pedestal PWR ON/SAFE safety interlock switch to **SAFE**.

3−5.6.63.3 Removal/Replacement Procedure.

WARNINGS

Failure to use safety equipment can cause severe injury or **DEATH** by impact with the surface below. Ensure all personnel are clear of the area below. Properly secure the safety harness prior to performing any maintenance task.

Failure to perform the preliminary setup can cause damage to equipment and serious injury or **DEATH**.

1. Don the safety harness and secure lanyard to secure anchor point.
2. In the radome, remove the floor grate and mesh screen using the proper socket.
3. Remove the vent fan assembly cover using the proper socket.
4. Remove the motor wiring access cover screws using the proper screwdriver.
5. Remove the two electrical screw caps from the connections in the motor wiring assembly.
6. Using a multimeter, verify there is no AC voltage on the wires.
7. Tag and remove the two motor leads using the pliers.
8. Remove the ground lead from the wiring assembly chassis using the proper screwdriver.
9. Remove the flex conduit from the wiring assembly chassis by loosening its locking screw using the proper screwdriver.
10. Pull the conduit along with the two leads and the ground lead from the motor wiring assembly.
11. Remove the holding screws from the base of the vent fan assembly using the proper socket.
12. Pull the vent fan assembly out while guiding the flex conduit out of the assembly. Set the vent fan assembly on the floor of the radome.
13. Remove the fan motor from the vent fan assembly by removing its holding nuts and bolts using the proper wrenches.
14. Remove the fan by removing the pin which holds the fan to the motor shaft using the proper pin punch and hammer.
15. Remove the holding bolts which secure the fan retaining disc using the proper socket.

16. Remove the fan retaining disc.
17. Note the orientation of the fan with respect to the motor shaft and then remove the fan from the motor shaft.
18. Install the fan to the shaft of the new fan motor noting its orientation in the previous step.
19. Install the fan retaining disc using the proper socket.
20. Install the pin (which holds the fan to the motor shaft) using the hammer.
21. Install the new fan motor to the vent fan assembly by inserting and tightening the holding nuts and bolts using the proper wrenches.
22. Lower the vent fan assembly into place while guiding the flex conduit into the assembly.
23. Secure the vent fan assembly by inserting and tightening its holding screws using the proper socket.
24. Route the two motor leads and the ground lead to the motor wiring assembly.
25. Insert the flex conduit into the wiring assembly chassis and tighten the locking screws using the proper screwdriver.
26. Install the ground lead to the wiring assembly chassis using the proper screwdriver.
27. Untag and connect the two motor leads using the pliers.
28. Install the two electrical screw caps to the connections in the motor wiring assembly.
29. Install the motor wiring access cover by inserting and tightening its holding screws using the proper screwdriver.
30. Install the vent fan assembly cover by inserting and tightening its holding screws using the proper socket.
31. Install the mesh screen and floor grate by inserting and tightening the holding screws using the proper socket.
32. Have second technician descend tower to apply power to Radome vent system. On the RDA Main PDP, set the Radome Vent circuit breaker CB17 to **ON**.
33. Set the Radome Vent Thermostat UD2S2 to a setting that is lower than the ambient temperature of the radome. The vent fan should turn on and damper actuator should open the vent louvers.
34. Verify the new fan motor turns on and operates normally without excessive noise.

35. Return the Radome Vent Thermostat UD2S2 to original setting (normally 85°F). The vent fan turns off and the damper should close.

36. Set the antenna pedestal PWR ON/SAFE safety interlock switch to **PWR ON** before descending to the RDA shelter.

37. On the RDA Maintenance Panel UD5A2, set the PEDESTAL ELECTRONICS POWER switch to **ON**. Remove SAFETY WARNING tag.

38. At the RDA Systems Console * prompt, enter **RDAUP <Enter>**.

39. Using the mouse, click on the Applications screen or press **<Alt>** and **<Tab>** keys to place the cursor on the Applications command line.

40. Restore the transmitter high voltage, place the system in the operate mode, and return control to the RPG by performing the RDA equipment startup procedures per paragraph 3−5.5, steps 4 and 5.

3−5.6.64 Aircraft Warning Light UD12A1DS1/DS2 Removal/Replacement.

The aircraft warning light assembly and the lightning rod are mounted on the Radome zenith panel. An oval zenith panel access hatch is provided for servicing the Aircraft Warning Light Assembly UD12A1. This procedure requires two technicians.

3−5.6.64.1 Equipment and Tools Required.

1. Safety harness
2. 3−foot break−away lanyard and 6−foot positioning lanyard
3. 2−inch gate opening carabiner (8.5−inch overall length), Miller P/N 18D1
4. Ladder, 20−foot extension
5. Screwdriver set, flat−tip
6. Lamps UD12A1DS1 and UD12A1DS2
7. Safety glasses
8. Hard hat
9. Pliers
10. Gloves

3−5.6.64.2 Initial Conditions/Preliminary Setup.

WARNING

Failure to power−down the Radar transmitter and pedestal drive can cause damage to equipment and serious injury or **DEATH**.

1. Obtain control from the MSCF, place the transmitter in standby, and remove high voltage by performing RDA equipment shutdown procedures per paragraph 3−5.4, steps 1, 2, and 4.

2. At the RDA Maintenance Panel UD5A2, set the PEDESTAL ELECTRONICS POWER switch to **OFF**.

3. Place a SAFETY WARNING tag on the RDA Maintenance Panel UD5A2.

4. At the RDA Main PDP UD7A2, set CB19, Aircraft Warning Lights to **OFF**.

5. At the RDA Secondary PDP UD7A3, set CB2, 4, and 6, Pedestal Motor Power, to **OFF** and install lockout/tagout.

3−5.6.64.3 Removal/Replacement Procedure.

WARNING

Failure to perform the preliminary setup can cause damage to equipment and serious injury or **DEATH**.

CAUTION

Two technicians are required to safely perform this procedure. Failure to comply with this caution can cause serious injury.

1. Secure safety chain to Radome access guard rails.

2. Set the antenna pedestal PWR ON/SAFE safety interlock switch to **SAFE**.

WARNINGS

The antenna must be stowed in both azimuth and elevation.

Do not rest the extension ladder on the elevation housing. Place the end of ladder with hooks on the support bracket below the elevation access door. With the system placed in standby, the antenna should be positioned in the park position and close to the stow mechanisms, however, the antenna may require minor movement to precisely align the stow mechanisms.

3. Stow the antenna in azimuth and 23 degrees elevation by aligning the stow pins and inserting the safety stow pins in the STOW position as follows:

   a. Align the azimuth stow pin mechanism by having one technician monitor the mechanism and directing the other technician to push the antenna dish.

   b. Hook the top of extension ladder to the ladder support bar at the bottom of the elevation housing.

c. Have one technician climb the extension ladder to the azimuth stow pin.

d. Remove the azimuth stow pin assembly safety interlock pin.

e. Stow the antenna in azimuth by performing the applicable step as follows:

1) **LPP sites:**

a) Push the stow pin handle upward to insert the stow pin in the stow pin seat hole.

b) While holding the stow pin handle in place, insert the safety interlock pin into the STOW hole.

2) **FSP sites:**

a) Push the pivot plate up until the notch is centered on the stow pin seat and the pivot plate sits flush against the turntable.

b) While holding the pivot plate in place, insert the safety interlock pin into the STOW hole.

f. Have the technician on the extension ladder climb to the elevation stow pins.

g. Have the other technician push the bottom of the antenna dish upwards until the stow pins are aligned to the 23 degree stow pin seat point.

h. Remove the elevation stow pin assembly safety interlock pins.

i. Stow the antenna in elevation by performing the applicable step as follows:

1) **LPP sites:**

a) Push one of the stow pin handles to insert the stow pin in the stow pin seat hole.

b) While holding the stow pin handle in place, insert the safety interlock pin into the STOW hole. Repeat on other stow pin.

2) **FSP sites:**

a) Push one of the pivot plates until the notch is centered on the stow pin seat and the pivot plate sits flush against the turntable.

b) While holding the pivot plate in place, insert the safety interlock pin into the STOW hole. Repeat on other stow pin.

j. Have the technician on the ladder climb down to the radome to move the ladder.

4. Move the extension ladder to the ladder support bar above the elevation access door.

WARNING

Failure to properly use the safety harness and lanyards can result in serious injury or **DEATH**.

5. Put on the safety glasses, hard hat, gloves, and safety harness, with the 3−foot break−away lanyard attached to the dorsal (back) D−ring. Attach the 2−inch gate opening carabiner to the front D−ring and attach the 6−foot positioning lanyard hooks to one of the hip rings.

6. Climb the extension ladder to the top of the elevation housing and climb up on the elevation housing.

7. Attach the 2−inch gate opening carabiner, which should already be connected to the harness front D−ring, to the antenna ladder slide mechanism.

8. Climb to the top of the antenna.

9. Attach the 3−foot break−away lanyard to a ladder rung or an antenna support strut.

10. Unhook one end of the 6−foot positioning lanyard and loop it around the ladder and re−attach it to the other harness hip ring to establish a comfortable working position.

WARNING

Hatch swings inward when opened. Open with caution. Failure to follow this warning can cause injury or **DEATH**.

11. Loosen the hatch clamp/wing nut and swing the fastener clamp aside.

12. Open the hatch and let it hang.

13. On the Aircraft Warning Light Assembly UD12A1, loosen screw holding the lens of each lamp in light assembly.

WARNING

The lens and lamps are extremely hot. Wear gloves when handling the lens and lamps.

14. Rotate each lens counter−clockwise approximately 1/4 turn and remove from light assembly. The lens' should be on a steel lanyard.

15. Replace warning lamps with new lamps.

16. Replace the lens on each light assembly and secure by rotating them clockwise approximately 1/4 turn.

17. Tighten screws to secure each lens to light assembly.
18. Request that the RDA Main PDP circuit breaker CB19 be set to **ON** and verify the aircraft warning lights are lit.
19. Close the zenith hatch and secure.
20. Disconnect the 6−foot positioning lanyard and the 3−foot break−away lanyard from their anchor points.
21. Climb down antenna ladder to the top of the elevation housing and release the safety harness 2−inch gate opening carabiner from ladder slide mechanism.
22. Climb down to extension ladder and unstow the elevation and azimuth stow mechanisms and placing the interlock safety pins in the OPERATE position as follows:
    a. At the elevation stow pins perform the applicable step as follows:
        1) **LPP sites:**
            a) Remove the safety interlock pin from STOW position and pull the stow pin handle to slide pin out of the stow pin seat hole.
            b) While holding the stow pin handle in place, insert the safety interlock pin into the OPERATE hole. Repeat on other stow pin.
        2) **FSP sites:**
            a) Remove the safety interlock pin from STOW position and pull the stow pivot plate from stow position and swing it over to the operate position.
            b) While holding the pivot plate in place, insert the safety interlock pin into the OPERATE hole. Repeat on other stow pin.
    b. Continuing climbing down extension ladder and stop at the azimuth stow pin.
    c. Unstow the antenna in azimuth by performing the applicable step as follows:
        1) **LPP sites:**
            a) Remove the safety interlock pin from STOW position and pull the stow pin handle down to slide pin out of the stow pin seat hole.
            b) While holding the stow pin handle in place, insert the safety interlock pin into the OPERATE hole.
        2) **FSP sites:**
            a) Remove the safety interlock pin from STOW position and pull the stow pivot plate from stow position and swing it down to the operate position.

b) While holding the pivot plate in place, insert the safety interlock pin into the OPERATE hole.

d. Climb down to the radome deck.

23. Remove extension ladder from elevation housing ladder support and place on the radome deck out of the way.

24. Set the antenna pedestal PWR ON/SAFE safety interlock switch to **PWR ON**.

25. Remove the safety chain from the radome access guard rails.

26. This completes the procedure within the radome.

27. At the RDA Secondary PDP, unlock or remove tagout, and set circuit breaker CB2, 4, and 6, Pedestal Motor Power, to **ON**.

28. Remove the SAFETY WARNING tag from the RDA Maintenance Panel.

29. On the RDA Maintenance Panel, set the PEDESTAL ELECTRONICS POWER switch to **ON**.

30. Restore transmitter high voltage and return system to operate and remote control by performing the RDA equipment startup procedures per paragraph 3−5.5, steps 4 and 5.

3−5.6.65 Circuit Breaker, Microwave Line of Sight (MLOS) Power Distribution Panel UD13A1 Removal/Replacement.

This procedure requires two technicians.

3−5.6.65.1 Equipment and Tools Required.

1. Screwdriver set, flat−tip

2. Multimeter

3−5.6.65.2 Initial Conditions/Preliminary Setup.

1. Obtain control from the MSCF and place the system in standby by performing RDA equipment shutdown procedures per paragraph 3−5.4, steps 1 through 2c.

2. On the RDA Secondary PDP UD7A3, set the MLOS shelter circuit breaker CB24 and CB26 to **OFF**.

3. On the MLOS PDP UD13A1, set the MLOS main disconnect circuit breakers CB1 and 3 to **OFF**.

3−5.6.65.3 Removal/Replacement Procedure.

WARNING

Failure to perform the preliminary setup can cause damage to equipment and serious injury or **DEATH**.

1. Remove the front cover of the MLOS PDP UD13A1 by removing the holding screws using the proper screwdriver.

2. Using a multimeter, verify there is no AC voltage across the input leads of CB1/3.

3. Tag and remove the lead from the circuit breaker to be replaced using the proper screwdriver.

4. Disengage the circuit breaker by pulling it outward and to the side. Note the amperage rating of the circuit breaker.

5. Install the new circuit breaker. Ensure that the new circuit breaker has the same amperage rating as the old circuit breaker had.

6. Untag and connect the lead to the new circuit breaker using the proper screwdriver.

7. Install the front cover and secure with screws removed.

8. On the MLOS PDP UD13A1, set the MLOS main disconnect circuit breakers CB1 and 3 to **ON**.

9. On the RDA Secondary PDP UD7A3, set the MLOS shelter circuit breaker CB24 and CB26 to **ON**.

10. At the RDA Maintenance Terminal, Applications screen Main Menu command and parameters lines, enter the following to bring the system to an operational state and return control to the MSCF:

    a. **ARCH<Tab>D<Enter>** to turn on the Archive II unit and wait until the status indicates `LOADED`, if applicable.

    b. **OPER<Enter>** and verify the status line changes to `OPER`.

    c. **ENRC<Enter>** to enable remote control.

3−5.6.66 TPMS Electric Toilet UD60A4 Removal/Replacement.

This procedure requires one technician.

3−5.6.66.1 Equipment and Tools Required.

1. Mechanic's Tool Kit

2. Screwdriver, #3 Phillips−tip

3−5.6.66.2 Initial Conditions/Preliminary Setup.

1. Unplug Electric Toilet power cord from wall receptacle.

3−5.6.66.3 Removal/Replacement Procedure.

1. Disconnect vent pipe.
2. Using a #3 Phillips screwdriver, remove four mounting screws from base of the toilet.
3. Replace toilet.
4. Connect vent pipe.
5. Plug Electric Toilet power cord into wall receptacle.
6. Perform Electric Toilet operation check per Table 3−21.

3−5.6.67 Circuit Breaker, TPMS Shelter Power Distribution System Panel UD60A5 Removal/Replacement.

This procedure requires two technicians.

3−5.6.67.1 Equipment and Tools Required.

1. Screwdriver set, flat−tip
2. Flashlight
3. Multimeter

3−5.6.67.2 Initial Conditions/Preliminary Setup.

CAUTION

Shutdown of the environmental control unit will occur when power is removed from the TPMS Shelter Power Distribution Panel UD60A5. TPS battery life is degraded when the ambient temperature is at / above 80°F. Maintenance should be scheduled when the ambient temperature will remain below 80°F. If this is not possible, the TPS should be removed from service per Table 2−8.

1. If the ambient temperature is above 80°F, shutdown the TPS per Table 2−8, steps 1 through 3. Otherwise, proceed to step 2.
2. Shutdown electrical equipment powered from the TPMS Shelter Power Distribution System Panel.
3. On the RDA Shelter Main Power Distribution Panel UD7A2, set CB38, 40, and 42 to **OFF** (power feed to the TPMS Shelter Power Distribution System Panel). Some sites may use another 3−phase breaker to power the TPMS shelter PDP.
4. On the TPMS Shelter Power Distribution System Panel UD60A5, set Main Breaker to **OFF**.

3−5.6.67.3 Removal/Replacement Procedure.

WARNING

Failure to perform the preliminary setup can cause damage to equipment and serious injury or **DEATH**.

1. Remove the outer door panel on the TPMS Shelter Power Distribution System Panel using flat−tip screwdriver.
2. Remove the inner panel by removing the four screws using a flat−tip screwdriver.
3. Using a multimeter, verify there is no AC voltage on the Main circuit breaker terminal screws. If voltage is present, the 3−phase circuit breaker CB38, 40, and 42 (or another 3−phase breaker a some sites) in the Main PDP has not been turned off.
4. Remove the lead(s) from the circuit breaker to be replaced using flat−tip screwdriver.
5. Remove the circuit breaker hold−down screw and then remove the breaker by pulling outward.
6. Insert the new circuit breaker and install the hold−down screw.
7. Install the lead(s) on the new circuit breaker using flat−tip screwdriver.
8. Install the inner panel and secure with the four screws using a flat−tip screwdriver.
9. Install the outer door panel to the TPMS Shelter Power Distribution System Panel and secure with the four screws using flat−tip screwdriver.
10. On the RDA Shelter Main Power Distribution Panel, set CB38, 40, and 42 to **ON**.
11. On the TPMS Shelter Power Distribution System Panel, set Main breaker to **ON**.
12. Turn on electrical equipment in TPMS shelter as required.
13. If the TPS was shutdown, perform TPS power−up procedure per Table 2−9, steps 4 through 9.

3−5.6.68 Hydrogen Detector UD60A10 Removal/Replacement.

This procedure requires two technicians.

3−5.6.68.1 Equipment and Tools Required.

1. Nutdriver set, 1/4” drive
2. Screwdriver set, flat−tip

3. Screwdriver, Phillips−tip
4. Miniature screwdriver set, flat−tip
5. Multimeter
6. ESD Component Handling Kit

3−5.6.68.2 Initial Conditions/Preliminary Setup.

CAUTION

The Hydrogen Detector UD60A10 has three sources of input power, 120 Vac from the power receptacle and approximately +9 Vdc and –12 Vdc from the TPS. Unplugging the power cord removes the AC input. To properly remove the DC input voltages and prevent any possible shorts, the TPS unit must be completely shut down and placed in maintenance bypass with the Input Disconnect Switch UD61A5S1 (TPMS Type 1, 2, and 4) or UD64CB1 (TPMS Type 5, 6, & 9) set to the **OFF** position.

1. Perform TPS shutdown procedure per Table 2−8, steps 1 through 3 and step 4 or 5, depending on site TPS configuration.
2. Unplug the power cord from the receptacle below the hydrogen detector.

3−5.6.68.3 Removal/Replacement Procedure.

WARNING

Failure to perform the preliminary setup can cause damage to equipment and serious injury or **DEATH**.

1. At the hydrogen detector, verify the green power on light is OFF
2. Remove the hydrogen detector front cover by removing the screw at the bottom of the housing and lifting the cover off.
3. Using a multimeter set to measure AC voltage, verify there is no voltage on the top terminal board (AC line/Gnd).
4. Using a multimeter set to measure DC voltage, verify there is no voltage on the bottom terminal board RY1 and RY2 terminals by measuring across each pair of wires. If the TPS was not completely shutdown, RY1 with show approximately +9 Vdc and RY2 will show approximately –12 Vdc.

ESD **CAUTION** **ESD**

The Hydrogen Detector UD60A10 contains printed circuit cards that are electrostatic sensitive devices which require special handling. Use standard ESD protection procedures.

5. Attach ESD wrist strap to wrist and connect clip−lead to a nearby conduit or grounded junction box.
6. Tag and loosen the three AC line terminal board screws using a miniature flat−tip screwdriver and remove the three wires.
7. Tag and loosen the four RY1 and RY2 terminal board screws using a miniature flat−tip screwdriver and remove the four wires.

NOTE

The new hydrogen detector comes with only one 1/2” hole to accommodate the AC power wires and not the four additional wires that go to RY1 and RY2 terminals. The hydrogen detector currently mounted to the wall may have one or two additional holes to accommodate the two pair of red and black wires that go to the RY1 and RY2 terminals. Unless the back plate is damaged, it is recommended that the circuit card be removed from the new hydrogen detector back plate and reinstalled to the back plate mounted to the wall. The following steps are written for the recommended procedure.

8. With a Phillips−tip screwdriver, remove the three screws securing the hydrogen detector circuit card to the back plate of the unit on the wall and set it aside.
9. With the new hydrogen detector set on an ESD protective mat, remove the front cover by removing the screw at the bottom of the housing and lifting the cover off.
10. With a Phillips−tip screwdriver, remove the three screws securing the circuit card to the back plate of the new hydrogen detector.
11. Install the new hydrogen detector circuit card to the back plate mounted on the wall and secure with the three screws removed in the previous step.
12. Ensure the small plug−in circuit card in the upper right corner of the new circuit card is firmly seated.
13. Untag and reattach the AC power wires to the top terminal board and tighten terminal board screws with a miniature flat−tip screwdriver.
14. Untag and reattach the two pair of red and black wires to the RY1 and RY2 terminals and tighten terminal board screws with a miniature flat−tip screwdriver.
15. Install the hydrogen detector front cover and secure with screw at the bottom.
16. Remove the ESD wrist strap.
17. Plug the power cord into the receptacle below the hydrogen detector.
18. Perform TPS power−up procedure per Table 2−9, steps 1 or 2, depending on site TPS configuration, and steps 4 through 9.

19. At the hydrogen detector, verify the green power on light is lit.

20. Perform an operational check of the new hydrogen detector by performing paragraph 3−2.23 and Table 3−23.

3−5.6.69 Sensor Board, Hydrogen Detector UD60A10A1 Removal/Replacement.

This procedure requires two technicians.

3−5.6.69.1 Equipment and Tools Required.

1. Nutdriver set, 1/4” drive
2. Screwdriver set, flat−tip
3. ESD Component Handling Kit

3−5.6.69.2 Initial Conditions/Preliminary Setup.

1. Unplug the power cord from the receptacle below the hydrogen detector.

3−5.6.69.3 Removal/Replacement Procedure.

WARNING

Failure to perform the preliminary setup can cause damage to equipment and serious injury or **DEATH**.

1. At the hydrogen detector, verify the green power on light is **OFF**.
2. Remove the hydrogen detector front cover by removing the screw at the bottom of the housing and lifting the cover off.

ESD **CAUTION** **ESD**

The Hydrogen Detector UD60A10 contains printed circuit cards that are electrostatic sensitive devices which require special handling. Use standard ESD protection procedures.

3. Attach ESD wrist strap to wrist and connect clip−lead to a nearby conduit or grounded junction box.
4. Remove the sensor board by rocking it back and forth while pulling the board outward.
5. Install the new sensor board. Ensure the sensor board pin socket is aligned with the pins on the main hydrogen detector circuit card.
6. Install the hydrogen detector front cover and secure with screw at the bottom.
7. Remove the ESD wrist strap.

8. Plug the power cord into the receptacle below the hydrogen detector.

9. At the hydrogen detector, verify the green power on light is lit.

10. Perform an operational check of the new hydrogen detector sensor board by performing paragraph 3−2.23 and Table 3−23.

3−5.6.70 Circuit Breaker, Hydrogen Detector UD60A13CB1 Removal/Replacement.

NOTE

This procedure applies to Type 1, 2, and 4 TPMS shelters only.

This procedure requires two technicians.

3−5.6.70.1 Equipment and Tools Required.

1. Screwdriver set, flat−tip

2. Multimeter

3−5.6.70.2 Initial Conditions/Preliminary Setup.

WARNING

The Hydrogen Detector Circuit Breaker UD60A13CB1 input power is is connected to the output of the Maintenance Bypass Disconnect Switch UD61A5S2 and Output Disconnect Switch UD61A5S3. To isolate the hydrogen detector circuit breaker, both disconnects will need to turned off (opened) which will remove critical power to the RDA shelter. Ensure the RDA/RPG equipment and TPS system are properly shut down.

1. Perform the applicable RDA, RPG, and RBDDS equipment shutdown procedures per paragraph 3−5.4.

2. Perform TPS shutdown procedures per Table 2−8, steps 1 through 3.

3. At the Output Disconnect Switch UD61A5S3, set the switch to the **OFF** position. Tag and lock out in the open position.

4. At the Maintenance Bypass Disconnect Switch UD61A5S2, ensure the switch is in the **OFF** position. Tag and lock out in the open position.

3−5.6.70.3 Removal/Replacement Procedure.

WARNING

Failure to perform the preliminary setup can cause damage to equipment and serious injury or **DEATH**.

1. At the Hydrogen Detector Circuit Breaker UD60A13 enclosure box, remove the six screws and pull off the enclosure cover.
2. Using a multimeter, ensure there is no AC voltage at the top of the breaker on the large gauge wire terminal screw.
3. Remove the wire leads from the circuit breaker.
4. Remove the two screws that mount the breaker to the enclosure. The breaker will have to be held in place while the screws are removed.
5. Install the new breaker and secure with the screws removed in previous step.
6. Loosen the same terminal screws on the new breaker as used on old breaker.
7. Insert the wire leads into the circuit breaker terminals and tighten screws.
8. Install the enclosure cover and secure with the six screws.
9. Set the hydrogen detector circuit breaker to the **ON** position.
10. Remove the tagout/lockouts from the Maintenance Bypass and Output Disconnect switches (if installed).
11. Set the Output Disconnect Switch UD61A5S3 to the **ON** position.
12. Ensure the Maintenance Bypass Disconnect Switch UD61A5S2 remains in the **OFF** position.
13. Verify the Hydrogen Detector UD10A10 green LED is lit.
14. Perform TPS power−up procedure per Table 2−9, steps 4 through 9.
15. Perform the applicable RDA, RPG, and RBDDS equipment startup procedures per paragraph 3−5.5.

3−5.6.71 TPMS ECU Thermostat UD60A14 Removal/Replacement.

NOTES

The Dayton model 2E397 or White Rodgers model 1C74−2 thermostat is a multi−stage thermostat for heating and cooling. The thermostat wiring is energized by the ECU control circuit power. The thermostat has two terminal strips for termination of control wiring to the ECU. The cooling stage control is set at 75°F and the heating stage control is set at 65°F. The ECU only has one−stage of heating coils and one−stage of cooling.

If the Dayton or White−Rogers thermostat requires replacement, the supply system will issue a Honeywell thermostat as the replacement.

This procedure requires one technician.

3−5.6.71.1 Equipment and Tools Required.

1. Screwdriver set, flat−tip

3−5.6.71.2 Initial Conditions/Preliminary Setup.

1. On TPMS Type 1 and 2 Shelter Power Distribution System Panel, set circuit breaker CB8/10 to **OFF**.
2. On TPMS Type 4, 5, 6, and 9 Shelter Power Distribution System Panel, set circuit breaker CB3/5 to **OFF**. For Type 4 ECU #2, set circuit breaker CB13/15 to **OFF**.

3−5.6.71.3 Removal/Replacement Procedure.

1. Remove cover from thermostat by pulling straight out.
2. For White−Rodger model 1C74−2, grasp and lift the bronze tab upward to raise the hinged cover until the bronze clip is exposed which will keep the hinged cover in raised position for access to wiring terminations.
3. Tag and disconnect wires from thermostat.
4. Remove the screws attaching the thermostat to the junction box. Remove and discard thermostat.
5. Remove cover from new thermostat and remove any packing/shipping pads.
6. Pull thermostat wires through opening in thermostat, position thermostat on junction box, and install screws.
7. Connect the thermostat wiring.
8. On White−Rodgers model, lower the hinged cover until the bronze tab snaps in place.
9. Install cover on thermostat.
10. Verify or set thermostat heating stage at 65°F and cooling stage at 75°F.
11. On TPMS Type 1 and 2 Shelter Power Distribution System Panel, set circuit breaker CB8/10 to **ON**.
12. On TPMS Type 4, 5, 6, and 9 Shelter Power Distribution System Panel, set circuit breaker CB3/5 (CB13/15 for Type 4 ECU #2) to **ON**.

3−5.6.72 TPMS Shelter High Temperature Shutdown Thermostat UD60A2A8 Removal/Replacement.

This procedure requires one technician.

NOTE

The Dayton model 2E206 thermostat is a SPDT switch with one set of contacts opening on temperature rise as the other set closes simultaneously. The thermostat terminals are color−coded − red dot is at the top terminal, blue dot at center terminal, and yellow dot at bottom terminals. The thermostat contact between the red and yellow terminals close on temperature rise. The thermostat contact between the red and blue terminals open on temperature rise. For this application, only the red and yellow terminals are used. With a setting of 90°F, the thermostat contact closes when the setting is exceeded.

3−5.6.72.1 Equipment and Tools Required.

1. Screwdriver set, flat−tip
2. Multimeter
3. Pliers
4. Electrical tape

3−5.6.72.2 Initial Conditions/Preliminary Setup.

1. Obtain control of the RDA from the MSCF by performing paragraph 3−5.4, steps 1 through 2c.
2. Perform TPS shutdown procedure per Table 2−8, steps 1 through 3.
3. Notify the local weather station office that a “TPS is OFF” alarm will be generated while the thermostat wiring is disconnected.

3−5.6.72.3 Removal/Replacement Procedure.

WARNING

Failure to perform the preliminary setup can cause damage to equipment and serious injury.

1. Remove the screw that secures cover on thermostat. Remove cover.

CAUTION

The TPS unit supplies −12 Vdc to the red and yellow terminals of the thermostat. To remove this voltage will require the entire TPS unit to be shutdown and the system placed in the Maintenance Bypass mode. However, the use of electrical tape to insulate the wires will preclude that requirement and only require the TPS to be placed in internal bypass as stated in preliminary setup paragraph.

2. Tag and disconnect each wire from the thermostat and place a piece of electrical tape over the terminal lug on each wire.
3. Remove the conduit lock−nut from the conduit union with pliers.
4. Remove the two screws that secure thermostat to wall. Remove thermostat.
5. Remove the cover from the new thermostat.
6. Inspect the new thermostat to see if the conduit knock−out has been removed. If not, the knockout at the top will be required to be removed to mount the new thermostat to the conduit.
7. Feed the two wires from the conduit through the thermostat knock−out.
8. Position new thermostat on conduit union and install the lock−nut and tighten.
9. Secure the thermostat to the wall with two screws.
10. Verify or set the thermostat to 90°F.
11. Remove tape from one wire at a time and connect wire to proper terminal, tighten screw, and remove tag. Repeat on other wire.
12. Perform TPS power−up procedure per Table 2−9, steps 4 through 9.
13. At the RDA Maintenance Terminal Applications screen alarm area, verify the alarm signal “TPS is OFF” has cleared.
14. Perform an operational check of the new thermostat as follows:
    a. Using a multimeter set to measure DC voltage, with the black meter lead on the red dot terminal and red lead on the yellow dot terminal, there should be approximately −12 Vdc with the thermostat set to 90°F, assuming the shelter temperature is below 90°F.

NOTE

When the temperature exceeds the thermostat setting, the normally open contacts close, the voltage across the red and yellow dot terminals drops to 0 Vdc, and the thermostat signals the TPS unit to shutdown to the Bypass mode.

b. While measuring across the red and yellow dot terminals, rotate the thermostat dial counterclockwise until the voltage is approximately 0 Vdc as displayed on the meter and you hear the thermostat contacts close, and the TPS unit shuts down to the Bypass mode.

c. At the RDA Maintenance Terminal Applications screen alarm area, verify the alarm signal “TPS is OFF” is displayed.

d. At the TPS monitor display, verify a “High Shutdown Temperature” alarm is displayed.

e. At the thermostat, set the dial to 90°F.

f. At the TPS control panel, rotate the START key switch to the right momentarily. The TPS starts up and will auto transfer back to on−line operation in approximately 30 seconds.

g. At the RDA Maintenance Terminal Applications screen alarm area, verify the alarm signal “TPS is OFF” is no longer displayed.

h. At the TPS monitor display, verify a “High Shutdown Temperature” alarm has cleared.

15. Install cover on thermostat and secure with screw.

16. Return control to MSCF by performing paragraph 3−5.5, step 5.

3−5.6.73 TPMS Shelter High Temperature Alarm Thermostat UD60A3A1 Removal/Replacement.

This procedure requires one technician.

NOTE

The Dayton model 2E206 thermostat is a SPDT switch with one set of contacts opening on temperature rise as the other set closes simultaneously. The thermostat terminals are color−coded. At Type 1, 2, and 4 TPMS sites, the thermostat is mounted upside down (coil at top) directly above the Alarm Termination Panel UD60A6 and the red dot is at the bottom terminal, blue dot at the center terminal, and yellow dot at the top terminal. At Type 5, 6, and 9 TPMS sites, the thermostat is mounted right side up (coil at bottom) above the Alarm Termination Panel UD60A6 and the red dot is at the top terminal, blue dot at center terminal, and yellow dot at bottom terminal. The thermostat contact between the red and yellow terminals close on temperature rise. The thermostat contact between the red and blue terminals open on temperature rise. For this application, only the red and blue terminals are used. With a setting of 80°F, the thermostat contact opens when the setting is exceeded.

3−5.6.73.1 Equipment and Tools Required.

1. Screwdriver, flat−tip
2. Multimeter
3. Pliers

3−5.6.73.2 Initial Conditions/Preliminary Setup.

1. Obtain control of the RDA from the MSCF by performing paragraph 3−5.4, steps 1 through 2c.
2. At the Maintenance Panel UD5A2, set the DAU POWER switch to **OFF**.
3. Notify the local weather station office that a “TPS is OFF” alarm will be generated while the thermostat wiring is disconnected.

3−5.6.73.3 Removal/Replacement Procedure.

WARNING

Failure to perform the preliminary setup can cause damage to equipment and serious injury.

1. Remove the screw that secures cover on thermostat. Remove cover.
2. Tag and disconnect wires from the thermostat.
3. Remove the plastic nut/wire protector using pliers.
4. Remove the conduit lock−nut from the conduit union with pliers.
5. Remove the two screws that secure thermostat to wall. Remove thermostat.
6. Remove the cover from the new thermostat.
7. Inspect the new thermostat to see if the conduit knock−out has been removed. If not, the knockout at the top will be required to be removed to mount the new thermostat to the conduit.
8. Feed the two wires from the conduit through the thermostat knock−out.
9. Position new thermostat on conduit union and install the lock−nut. Tighten nut with pliers.
10. Install the plastic nut/wire protector and tighten with pliers.
11. Secure the thermostat to the wall with two screws.
12. Verify or set the thermostat to 80°F.
13. Connect wires to the thermostat, tighten screws, and remove tags.

14. At the RDA Maintenance Panel, set the DAU POWER switch to **ON**.

15. Perform an operational check of the new thermostat as follows:

    a. Using a multimeter set to measure DC voltage, measure across the blue and red dot terminals. With the thermostat set to 80°F, there should be 0 Vdc across the terminals, assuming the shelter temperature is below 80°F.

    b. While measuring across the red and blue dot terminals, rotate the thermostat dial counterclockwise until approximately 5 Vdc (the polarity is not important, only that the voltage changes from 0 Vdc to 5 or −5 Vdc) is displayed on the meter and you hear the thermostat contacts open.

    c. At the RDA Maintenance Terminal Applications screen alarm area, verify the alarm signal “TPS is OFF” is displayed.

    d. At the TPS monitor display, verify a “High Alarm Temperature” alarm is displayed.

    e. At the thermostat, set the dial to 80°F.

    f. At the RDA Maintenance Terminal Applications screen alarm area, verify the alarm signal “TPS is OFF” is no longer displayed.

    g. At the TPS monitor display, verify a “High Alarm Temperature” alarm has cleared.

16. Install cover on thermostat and secure with screw.

17. Return control to MSCF by performing paragraph 3−5.5, step 5.

3−5.6.74 TPS Supervisory Contact Module (SCM) UD65 Circuit Board Removal/Replacement.

This procedure requires two technicians.

3−5.6.74.1 Equipment and Tools Required.

1. Screwdriver set, Phillips−tip
2. Screwdriver set, flat−tip
3. 1/4” Nut driver or wrench
4. ESD Handling Kit

3−5.6.74.2 Initial Conditions/Preliminary Setup.

1. Obtain control from the MSCF by performing the procedures per paragraph 3−5.4, steps 1 through 2c.
2. Perform TPS shutdown procedures per Table 2−8, steps 1 through 3.
3. Remove the screw and small access panel located below the modem to gain access to the Customer Interface Panel UD62A11.

4. At the Customer Interface Panel Remote Monitor Panel UD62A11A1 (to the right of the two terminal boards and identified by the panel with the fuse and green terminal board), remove the fuse from the fuse holder as set aside. This fuse supplies DC voltage to the SCM.

3−5.6.74.3 Removal/Replacement Procedure.

WARNING

Failure to perform the preliminary setup can cause damage to equipment and serious injury.

1. Remove three of the four cover screws using a #2 Phillips screwdriver.

NOTE

The Supervisory Contact Module (SCM) circuit board is mounted on inside cover with two wiring harnesses between circuit board connectors and terminal strips in SCM box.

2. Have second technician hold the cover and remove the remaining cover screw using a #2 Phillips screwdriver.

ESD **CAUTION** **ESD**

The Supervisory Contact Module (SCM) printed circuit board UD65 is an electrostatic sensitive device which requires special handling. Use standard ESD protection procedures.

3. Attach ESD wrist strap to wrist and connect clip−lead to a nearby conduit or grounded junction box.
4. On Plug J1, depress the release tabs on each side of pull plug straight out.
5. Using a flat−tip screwdriver, remove two screws securing Plug J2 to board connector. Pull plug straight out from connector.
6. Using 1/4” nut driver, remove the four nuts, lock washers, and flat washers securing the SCM board to cover panel standoffs.
7. Remove the circuit board from the stud standoffs and set on a protective ESD mat or bag.
8. Position new SCM circuit board on stud standoffs and install the four flat washers, lock washers, and nuts. Tighten nuts to a snug−tight condition.
9. Insert Plug P1 into the board mounted connector J1 until in snaps in and locks tabs on each side of the connector.
10. Insert Plug P2 into the board mounted connector J2 and secure the connector with the two small screws.

11. Position cover and install cover screws using a #2 Phillips screwdriver.
12. At the Customer Interface Panel Remote Monitor Panel UD62A11A1, insert the fuse.
13. Install the small access over the Customer Interface Panel and secure with single screw.
14. Perform TPS power−up procedure per Table 2−9, steps 4 through 9.
15. Return control to MSCF by performing paragraph 3−5.5, step 5.

SECTION 3−6. ALIGNMENT AND ADJUSTMENT PROCEDURES

3−6.1 GENERAL INFORMATION.

This section provides alignment procedures for the temperature sensors as well as adjustment procedures for the clogged filter indicators. Normally, alignment procedures are used during replacement of the temperature sensors or manual troubleshooting. The clogged filter indicator adjustment is normally used to ensure proper air filter operation when replacing air filters.

3−6.2 ROOM INTERIOR AIR TEMPERATURE SENSOR MODEL 753 TEMPERATURE VOLTAGE TEST.

The following procedure verifies the calibration accuracy of the Model 753 room air sensor.

3−6.2.1 Equipment and Tools Required.

1. Multimeter, digital
2. Fahrenheit thermometer
3. Potentiometer 200 ohm, 20−turn with two wire leads
4. Screwdriver, flat−tip, 1/8″
5. Screwdriver set, Phillips−tip
6. Clip leads, alligator (Qty=2)
7. 2″ piece of wire
8. Test Leads, Multimeter, pin jack

3−6.2.2 Voltage Check Procedure.

1. Measure and record the equipment shelter temperature (T) using the Fahrenheit thermometer.
2. Measure the sensor output voltage by inserting the digital voltmeter leads into the positive (+) and negative (–) test jacks on the Model 753 Temperature Sensor. (See Figure 3−3.)

3. Calculate the expected sensor output voltage using the following formula.

$$\frac{T - T_O}{SPAN} \times V_{Range} + 0.2V = \text{Expected voltage for present temperature}$$

Where: T = Present temperature value recorded in step 1.

T_O = Lower temperature limit for sensor.

SPAN = Difference between upper and lower temperature limit listed on sensor

V_{Range} = Difference between upper and lower voltage limits listed on sensor.

4. If the measured sensor voltage differs from the calculated voltage by more than 10%, the sensor should be adjusted.

3−6.2.3 Zero and Span Adjustment Procedure

1. Measure the sensor output voltage by inserting the digital multimeter leads into the positive (+) and negative (–) test jacks on the Model 753 Temperature Sensor. (See Figure 3−3.) While measuring sensor output voltage, adjust the ZERO potentiometer so the meter reads the expected voltage for present temperature.

2. Remove Model 753 Temperature Sensor from junction box using proper screwdriver.

3. Check RTD resistance (Figure 3−4 and Table 3−26).

4. Using a digital multimeter, set the 200 ohm, 20−turn potentiometer resistance to the value of the lower limit of the span.

5. Using 1/8″ flat−tip screwdriver, disconnect the RTD element from transmitter circuit board and connect 200 ohm, 20−turn potentiometer.

6. Connect digital multimeter in series with potentiometer. (See Figure 3−5.)

7. Set digital multimeter to milliamperes. Adjust the ZERO potentiometer until meter reads 4.0 mA ± 0.2.

8. Disconnect 200 ohm, 20−turn potentiometer. Set potentiometer to the upper temperature limit using RTD resistance chart. (See Figure 3−4.) Reconnect potentiometer.

Table 3−26. Air Temperature Sensor Cal Temp/Ohm Range

Nomenclature	Cal Temp/Ohm Range
RDA Interior Air Temperature Sensor	32° to 122°F/(100 to 119.395 ohms)
RDA Exterior Air Temperature Sensor	−58° to 140°F/(80.307 to 118.967 ohms)
Radome Air Temperature Sensor	−58° to 140°F/(80.307 to 118.967 ohms)
AC #1 Exhaust Air Temperature Sensor	14° to 140°F/(96.086 to 123.239 ohms)
AC #2 Exhaust Air Temperature Sensor	14° to 140°F/(96.086 to 123.239 ohms)
Xmtr Exhaust Air Temperature Sensor	14° to 140°F/(96.086 to 123.239 ohms)
Generator Shelter Interior Air Temperature Sensor	32° to 122°F/(100 to 119.395 ohms)

NOTE

Use with RTD Resistance Chart, Figure 3−4.

9. Adjust SPAN potentiometer until meter reads 20 mA ± 0.2.

10. Return all connections to original state.

11. Place thermometer close to RTD element (sensor).

12. With the RDA software up and running, type: **DIPD<Tab>TOW<Return>** at the RDA Applications Terminal to display tower utility data.

13. Type **PAGE** to page forward to display the sensor being adjusted.

14. Adjust the ZERO adjustment potentiometer (See Figure 3−3) until the thermometer and the display on the maintenance terminal agree within ± 1 degree. (Repeat step 12 to update the display.)

In addition to the Model 753 Temperature Sensor used in the equipment and generator shelters, there is another type of temperature sensor, manufactured by Weed. There are five sensors used: two sensors for the air conditioner, one for transmitter, one for the radome, and one exterior temperature sensor is placed inside various types of cases (the type of case depends on the site). All cases are opened with the proper screwdriver. The temperature sensor (transmitter part) is depicted in Figure 3−6.

3−6.3 RTD TEMPERATURE SENSOR ALIGNMENT (FOR NEW REPLACEMENT).

The following procedure verifies the calibration accuracy of the temperature sensor.

3−6.3.1 Equipment and Tools Required.

1. Multimeter, digital
2. Test leads, Multimeter, pin jack
3. Multimeter, alligator clip leads (Qty=2)
4. 200 ohm 20−turn potentiometer
5. Screwdriver set, flat−tip
6. Screwdriver, Phillips−tip
7. 2″ piece of wire
8. Fahrenheit thermometer

3−6.3.2 Alignment Procedure.

1. Access the transmitter section of the temperature sensor using a flat−tip screwdriver.
2. Check the RTD resistance (see Figure 3−4) for the sensor being aligned.
3. Perform steps 4 through 14 of paragraph 3−6.2.3. See Figure 3−5 for these procedures.

3−6.4 CLOGGED FILTER INDICATOR ADJUSTMENT.

This procedure provides instructions to clean or replace the air intake filters and adjust the Clogged Filter Indicators UD7A14, A15, and A16 for the Equipment Shelter Air Conditioners UD7AC1 and UD7AC2 without economizer, and the Transmitter UD3.

This procedure requires two technicians.

3−6.4.1 Equipment and Tools Required.

1. Nutdriver, 5/16″
2. 11 × 17 paper, 4 sheets
3. Air conditioner filters
4. Transmitter filter

3−6.4.2 Initial Conditions/Preliminary Setup.

1. Ensure that the settings of Air Conditioner #1 Thermostat UD7S3 and Air Conditioner #2 Thermostat UD7S4 are in accordance with Table 1−6 for air conditioners without economizer.

2. Stop the blowers in each AC unit by setting the SYSTEM switch on each thermostat to the **OFF** position; one at a time.

3. Perform transmitter power−down procedure per paragraph 3−5.4 steps 1, 2, and 4, when performing work on transmitter vent system.

3−6.4.3 Adjustment Procedure.

1. At the RDA Equipment Shelter Assembly UD7, check and/or replace the air conditioner filters by performing the following at each of the AC intake vents:

   a. Remove two screws at each side of middle access panel using 8−mm open−end wrench and loosen rotating fastener; covers are hinged at top.

   b. Remove and examine each filter. If intake surface of the filter is only slightly discolored, it can be re−used. Replace filters that are impregnated with dirt.

   c. Install filters and replace middle access panel by reversing step a.

2. At the transmitter air intake system check and/or replace air filter by performing the following:

CAUTION

The transmitter must be powered down per paragraph 3−5.4, steps 1 thru 2c and 4, before performing step 2b to prevent equipment damage.

   a. Set the HIGH VOLTAGE POWER circuit breaker on the Transmitter Power Panel UD3A13 to the **OFF** position to de−energize the transmitter blower.

   b. Using a 5/16″ nutdriver, remove the four hex−head retaining screws from the air duct filter cover.

   c. Remove filters.

   d. Install new or clean, old filters and replace cover with retaining screws.

3. Adjust Clogged Filter Indicators UD7A14 and A15, as follows:

   a. At AC#1 Thermostat UD7S3, set the FAN switch to **ON** and the SYSTEM switch to **AUTO** to energize the fan.

   b. Verify that the blower is on by holding a sheet of paper in front of the UD7AC1 intake vent. The paper will adhere to the vent when the blower is on.

   c. Remove paper from vent.

   d. At UD7A14, turn adjusting screw **clockwise** to end of travel, but do not tighten.

e. Verify the red Clogged Filter indicator flag is not visible. If it is, turn the reset knob clockwise to reset flag.

f. Cover 2/3 (1/3 on left side and 1/3 on right side) of the surface on the UD7AC1 intake vent with paper. The remaining uncovered 1/3 should be in the center of the vent.

g. Turn the UD7A14 adjusting screws **counter−clockwise** until the red Clogged Filter indicator flag drops.

h. Remove paper from vent and reset flag if necessary.

i. At UD7S3, set the FAN switch to **AUTO**.

j. Repeat steps 3a through 3i for Clogged Filter Indicator UD7A15, substituting UD7S4 for UD7S3 and UD7AC2 for UD7AC1.

4. Adjust Transmitter Clogged Filter Indicator UD7A16, as follows:

a. Unlock the HIGH VOLTAGE POWER circuit breaker CB1 with the key and switch to the **ON** position to energize the transmitter blower.

b. Record the current temperature setting at the Transmitter Vent Thermostat UD7S5 _____ °F; it is normally 85°F.

c. Turn the UD7S5 Thermostat knob to minimum temperature. The transmitter internal intake vent louvers will close.

d. Exit the shelter and locate the transmitter intake vent.

e. Repeat steps 3d thru 3h, substituting UD7A16 for UD7A14 and UD3 Transmitter for UD7AC1.

f. Restore temperature setting of UD7S5 to the value recorded in step 4b.

5. Restoration. Perform transmitter power−up procedure per paragraph 3−5.5, steps 4 and 5.

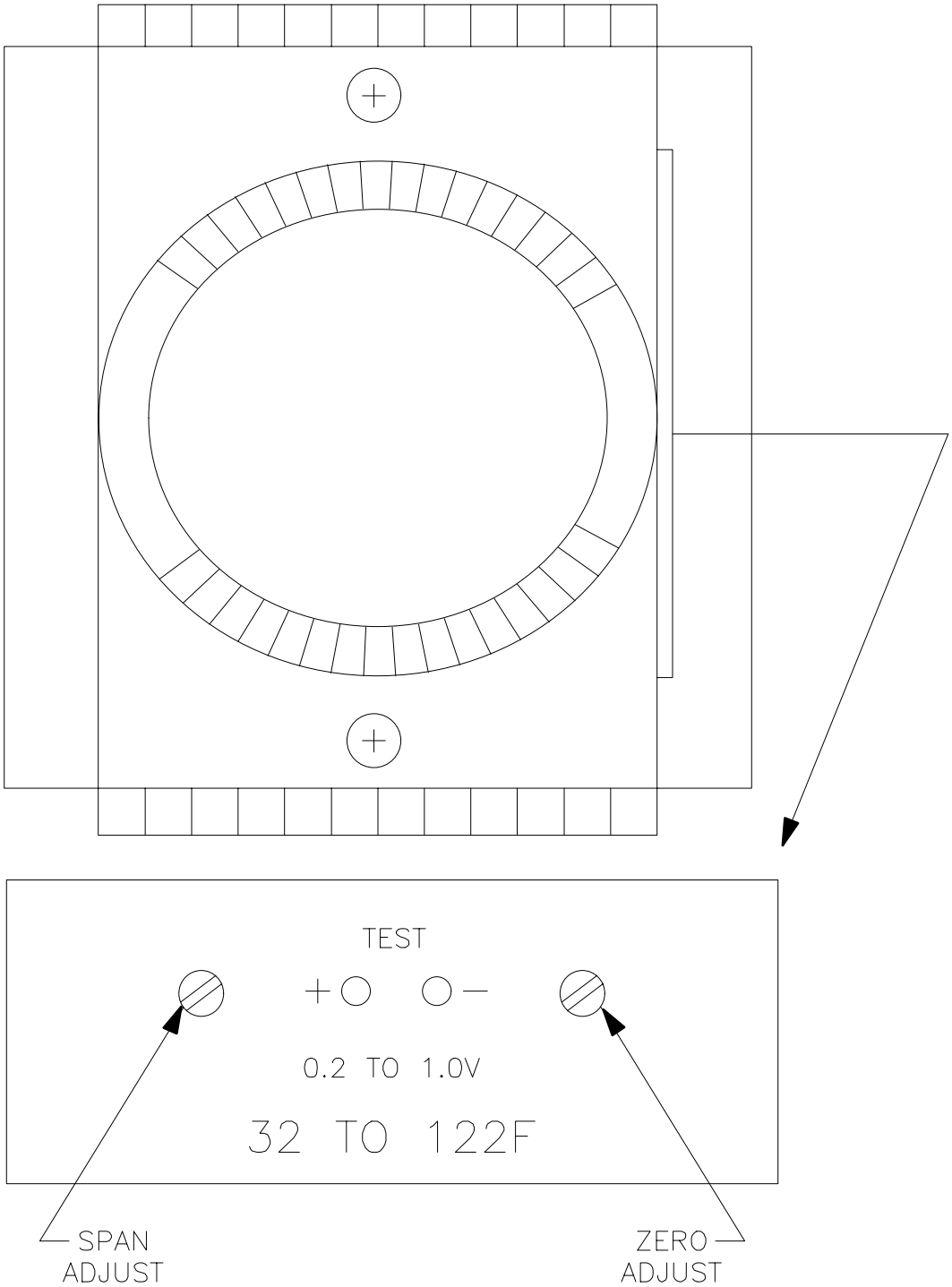

NX2359

Figure 3−3. Internal Temperature Sensor, Weed Model 753

Curve A – 100 Ohm Platinum
(Temperature Coefficient of Resistance = .003902 ohms/ohm/°C)

°C	0	−10	−20	−30	−40	−50	−60	−70	−80	−90	−100
0	100.00	96.03	92.06	88.06	84.06	80.04	76.01	71.96	67.89	63.80	59.69
°C	0	+10	+20	+30	+40	+50	+60	+70	+80	+90	+100
0	100.00	103.96	107.90	111.83	115.75	119.66	123.55	127.44	131.31	135.17	139.02
+100	139.02	142.86	146.68	150.50	154.30	158.09	161.87	165.64	169.39	173.14	176.87
+200	176.87	180.59	184.30	188.00	191.68	195.35	199.02	202.67	206.31	209.93	213.55
+300	213.55	217.15	220.74	224.32	227.89	231.45	234.99	238.52	242.05	245.56	249.05
+400	249.05	252.54	256.01	259.48	262.93	266.37	269.79	273.21	276.62	280.01	283.39
+500	283.39	286.76	290.11	293.46	296.79	300.12	303.43	306.73	310.01	313.29	316.55
+600	316.55	319.80	323.04	326.27	329.49	332.70					
°F	0	−20	−40	−60	−80	−100	−120	−140	−160	−180	−200
0	92.94	88.51	84.06	79.59	75.11	70.60	66.07	61.52	56.94	52.33	47.69
°F	0	+20	+40	+60	+80	+100	+120	+140	+160	+180	+200
0	92.94	97.36	101.76	106.15	110.52	114.88	119.22	123.55	127.87	132.17	136.46
+200	136.46	140.73	144.99	149.23	153.46	157.67	161.87	166.06	170.23	174.38	178.52
+400	178.52	182.65	186.76	190.86	194.95	199.02	203.07	207.11	211.14	215.15	219.15
+600	219.15	223.13	227.10	231.05	234.99	238.92	242.83	246.72	250.60	254.47	258.32
+800	258.32	262.16	265.99	269.79	273.59	277.37	281.14	284.89	288.62	292.35	296.05
+1000	296.05	299.75	303.43	307.09	310.74	314.38	318.00	321.61	325.20	328.78	296.05
+1200	332.34										

Note: °F resistance change per degree at 32°F is 0.22 ohms/°F. Use this chart with Air Temperature Sensor Cal Temp/Ohm Range Table 3–26.

NX2360

Figure 3–4. RTD Resistance Chart

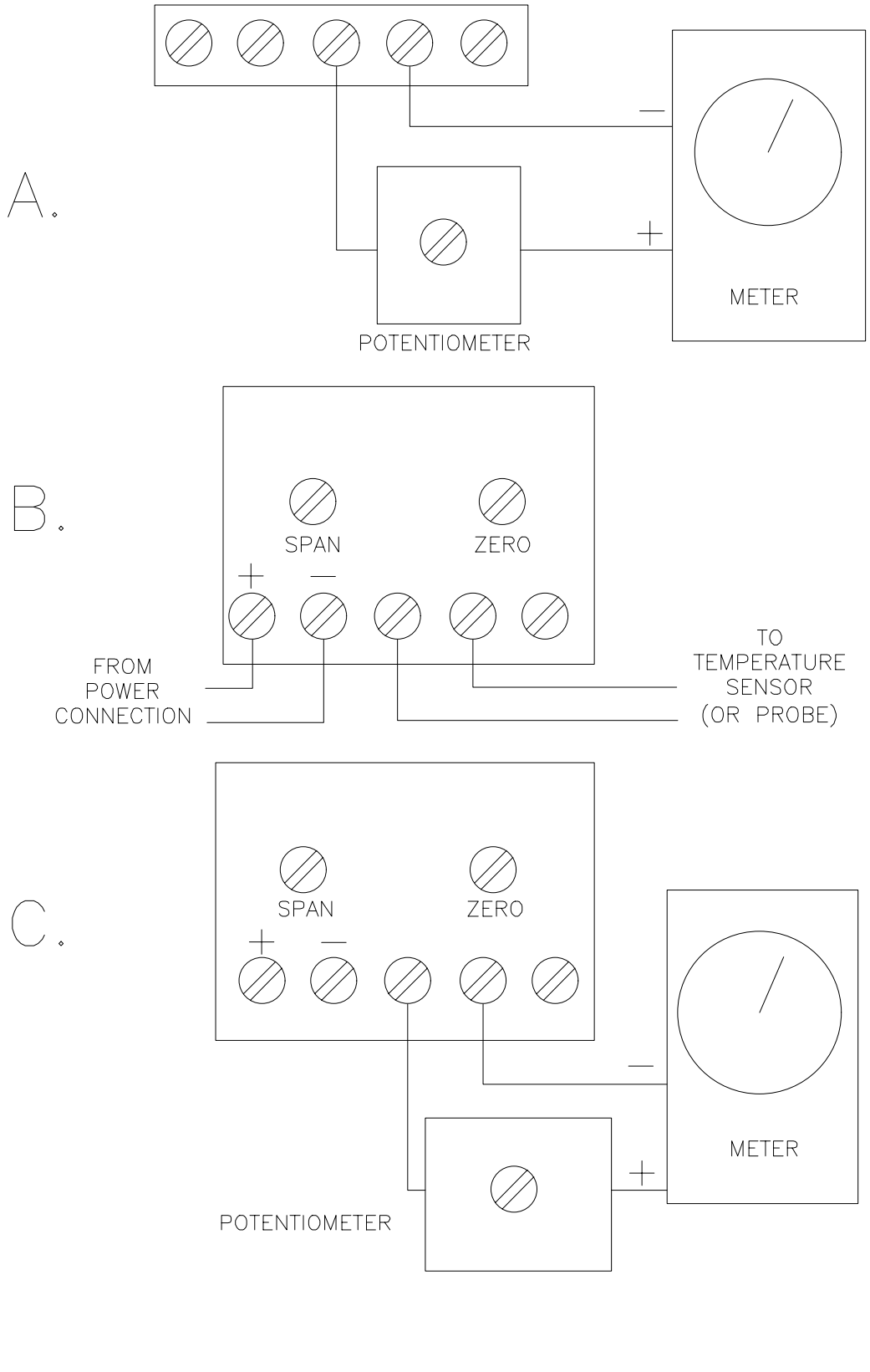

Figure 3−5. RTD Temperature Sensor Alignment Diagrams

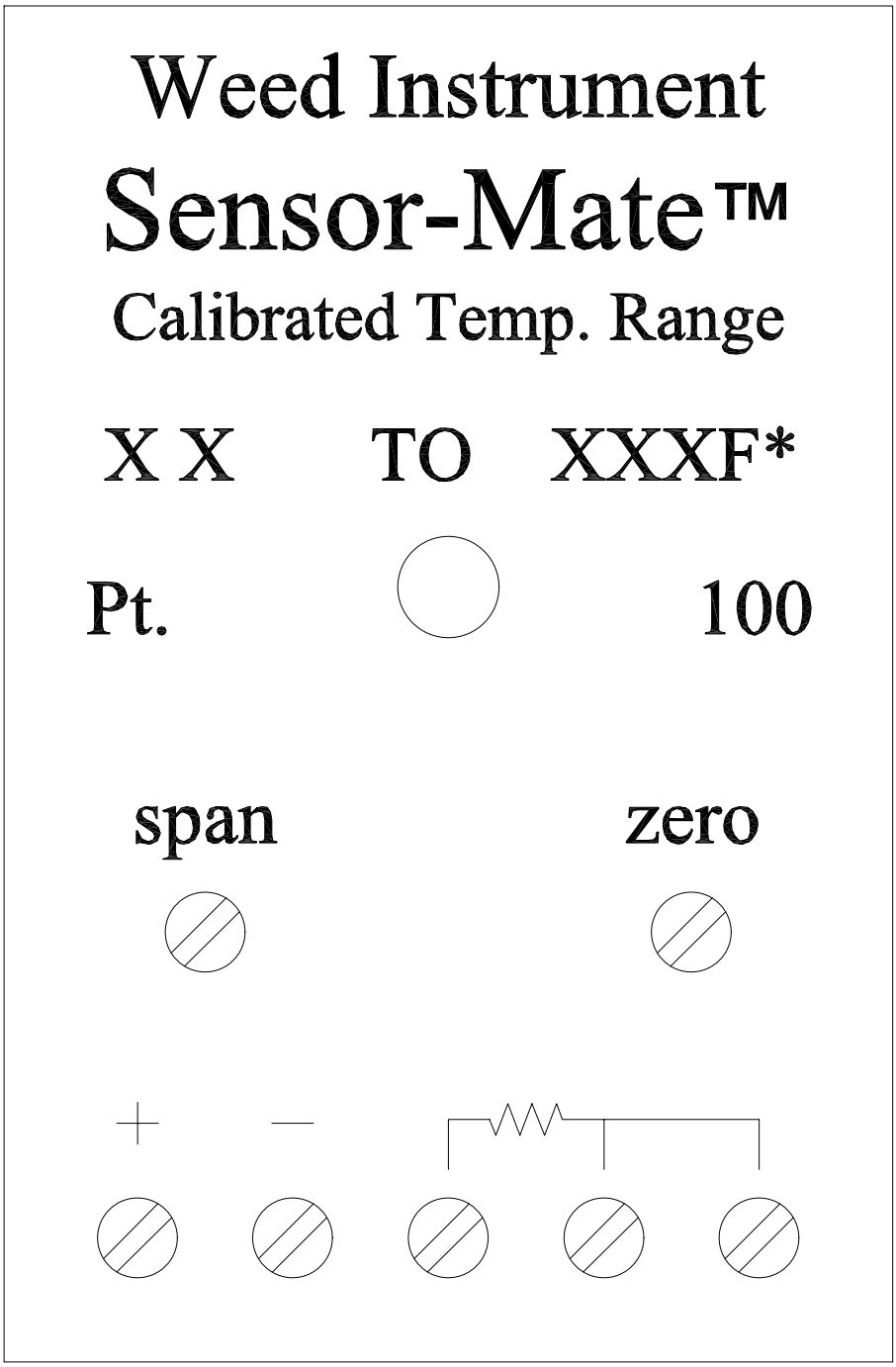

* CALIBRATED TEMPERATURE RANGE IS DEPENDENT ON LOCATION OF SENSOR. REFER TO TABLE 3-26.

NX2362

Figure 3−6. Air Conditioner/Transmitter Discharge and Exterior Air Temperature Sensor

3−6.5 CLOGGED FILTER INDICATOR ADJUSTMENT FOR RDA EQUIPMENT SHELTERS WITH A/C ECONOMIZER.

This procedure provides instructions to clean or replace the air intake filters and adjust the Clogged Filter Indicator UD7A15 for the Equipment Shelter Air Conditioner UD7AC2 with economizer. This procedure requires two technicians.

3−6.5.1 Equipment and Tools Required.

1. Screwdriver set, Phillips−tip
2. Screwdriver set, flat−tip
3. Nutdriver, 5/16″
4. Air conditioner filters
5. 11 × 17 paper, 1 sheet
6. Masking tape
7. Mild detergent
8. Bucket with water

3−6.5.2 Initial Conditions/Preliminary Setup.

1. Ensure that the settings of Thermostats UD7S3 and UD7S4 are in accordance with Table 1−6 for air conditioner with economizer.
2. Stop the blower in AC#2 unit by setting the SYSTEM switch on UD7S4 Thermostat to the **OFF** position.
3. For air conditioner equipped with hooded economizer ECW−4A, perform steps a through c below, then continue to step 5:
   a. Remove filter access and control panels on side of intake hood of economizer assembly.
   b. Remove air conditioner filter from air filter service panel.
   c. Remove mist filter from under intake hood of economizer by pressing downward (inward) on its upper (outside) lip.
4. For air conditioner with internally mounted economizer EIFM−5A, perform steps a through c below, and then continue to step 5:
   a. Remove bottom access panel on rear of air conditioner.
   b. Remove mist filter from front of the economizer by pressing downward (inward) on its upper (outside) lip.
   c. Remove air filter beneath intake of blower assembly.

5. On economizer control panel (Figure 2−3), set the minimum position potentiometer to its maximum clockwise position using a Phillips−tip screwdriver.

6. Observe that the economizer damper door moves to the fully open position.

7. Inspect removed air filter for dirt and replace as necessary.

8. Install air filter into air conditioner by reversing procedure in steps 3b or 4c, above.

3−6.5.3 Adjustment Procedure.

1. Adjust Clogged Filter Indicator UD7A15 by repeating steps 3a through 3i in paragraph 3−6.4.3, substituting UD7S4 for UD7S3 and air conditioner 2 for air conditioner 1.

2. On economizer control panel (Figure 2−3), set the minimum position potentiometer to its maximum counter−clockwise position using a Phillips−tip screwdriver.

3. Inspect mist filter for dirt and clean using detergent and water.

4. Install mist filter into economizer.

5. For air conditioner equipped with hooded economizer ECW−4A, install filter access and control panels on side of intake hood of economizer assembly.

6. For air conditioner with internally mounted economizer EIFM−5A, install bottom access panel on rear of air conditioner.

7. Set the SYSTEM switch on UD7S4 thermostat to **AUTO**.

3−6.6 FUEL LEVEL SENSOR − CALIBRATION CHECK AND ADJUSTMENT.

This procedure requires one technician.

3−6.6.1 Equipment and Tools Required.

1. Six foot folding ruler, carpenter's type

2. Screwdriver set, flat−tip

3. Screwdriver, jewelers, flat−tip or alignment tool

4. Adjustable wrench, 15″

5. Multimeter, digital (Fluke 87 or equivalent)

6. Test Leads, multimeter, with alligator clips and spade terminals

7. Calculator

8. Wiping rag or paper towels

3−6.6.2 Calibration Check Procedure.

1. Obtain control from the MSCF and place the system in standby by performing paragraph 3−5.4, steps 1 through 2c.

2. At the RDA Applications Terminal command and parameter lines, enter: **DIPD<Tab>TOW<Enter>**. Note the `GEN FUEL LEVEL` in column 2 as follows:

   GEN FUEL LEVEL _____%

NOTE

The engine generator is disabled only as a precaution. It is not necessary to disable the engine generator to perform this procedure. However, if the generator is not disabled, have hearing protection available in the event the engine generator does start up.

3. Disable the engine generator by performing the following applicable step:

   a. At the Kohler generator control panel, perform the following steps:

      1) Set the RUN−OFF/RESET−AUTO switch to **OFF/RESET**. Observe that the GENERATOR SWITCH NOT IN AUTO indicator illuminates.

      2) Push the emergency stop button **IN**.

   b. At the Onan generator control panel, perform the following steps:

      1) Set the RUN−STOP(RESET)−REMOTE switch to **STOP**. Observe that the red SWITCH OFF indicator flashes on and off continuously.

      2) Push the emergency stop button **IN**.

4. Check for the presence of a filler plug on the top of one of the fuel tanks. Remove it using the 15″ adjustable wrench.

NOTE

The folding ruler in the following step has a finish on the ruler that makes the wet level hard to read. An alternate method is to use a 48” dowel rod and measure the wet level with the folding ruler.

5. Unfold the folding ruler to the 48″ level. Immerse the ruler straight down into the fuel tank through the fill hole. Be careful not to drop the ruler down the fill hole. Extract the ruler and record the “wet level” as below:

   Wet level = _____ inches.

6. Calculate the % Fuel Level (measured) as follows:

   % Fuel Level (measured) = Wet Level (in) / 43 in.

   = _____ / 43

   = _____ %

   Where 43 inches is the Fuel Tank full level.

7. Calculate the Fuel Level error as follows:

   Fuel Level Error = GEN FUEL LEVEL (step 2) − % Fuel Level (measured) (step 6)

   = _____ − _____

   = _____ %

8. If the Fuel Level Error is less than 10%, this check passed successfully. If the error exceeds 10%, the fuel level sensor must be calibrated per paragraph 3−6.6.3. In any event, replace the filler hole plug which was removed in step 4 above.

9. If calibration is required, proceed to paragraph 3−6.6.3. If calibration is not required, return the Generators to their "ready" status, if disabled, by performing the following:

   a. At the Kohler generator control panel, perform the following steps:

      1) Rotate the emergency stop button 1/4 turn clockwise until the button pops **OUT**.

      2) Set the RUN−OFF/RESET−AUTO switch to **AUTO**.

   b. On the Onan generator control panel, perform the following steps:

      1) Pull the emergency stop button **OUT**.

      2) Set the RUN−STOP(RESET)−REMOTE switch to **REMOTE**.

10. At the RDA Applications Terminal, enter **OPER<Return>** to resume normal operations.

3−6.6.3 Fuel Level Sensor Calibration.

NOTE

This procedure is on a Technical Manual Video CD and should be viewed prior to performing the calibration.

When the Fuel Level Calibration check indicates the need for calibration, or the fuel level sensor is replaced, calibrate the sensor as follows:

1. At the RDA Applications Terminal, enter **STBY<Return>** to establish the Standby mode.

2. On the RDA Maintenance Panel UD5A2, set the DAU POWER switch to **OFF**. Place a SAFETY WARNING tag on this switch.

NOTE

The engine generator is disabled only as a precaution. It is not necessary to disable the engine generator to perform this procedure. However, if the generator is not disabled, have hearing protection available in the event the engine generator does start up.

3. Proceed to the generator shelter and disable the engine generator by performing the following applicable step:

   a. For Kohler generators, perform the following steps:

      1) On the generator control panel, set the RUN−OFF/RESET−AUTO switch to **OFF/RESET**. Observe that the GENERATOR SWITCH NOT IN AUTO indicator illuminates.

      2) On the generator control panel, push the emergency stop button **IN**.

   b. For Onan generators, perform the following steps:

      1) On the generator control panel, set the RUN−STOP(RESET)−REMOTE switch to **STOP**. Observe that the red SWITCH OFF indicator flashes on and off continuously.

      2) On the generator control panel, push the emergency stop button **IN**.

4. Remove the cover from the fuel level sensor assembly. It may be necessary to use a large screwdriver or the handle of the adjustable wrench to break the cover loose.

5. Loosen one of the screws securing the plastic insulating cover. Move the plastic cover out of the way to gain access to the terminals.

6. Using the digital multimeter (DVM) on the DC volts function, check for the absence of any DC voltage on either of the leads coming into the sensor from the conduit. There should not be any voltage to chassis ground because the DAU POWER switch on the Maintenance Panel is turned off.

7. Remove the black and red leads from the sensor terminal board. Note which lead is connected to which terminal.

8. Remove the conduit from the sensor and pull the wires out of the sensor housing.

9. Using the 15″ adjustable wrench, loosen the 2″ nut which secures the sensor assembly to the fuel tank. Rotate the sensor assembly counter−clockwise until it is completely loose.

10. Pull the sensor assembly straight up out of the tank while using a wiping rag or paper towels to wipe excess fuel from the probe. Carefully lay the sensor assembly on top of the fuel tank in such a position that the leads previously removed may be re−connected to the sensor terminal board. Make sure that the sensor assembly is stable and will not roll off the top of the tank.

11. Adjust the SPAN potentiometer fully CCW.

12. Set the Timer Delay switch to **OFF** (down) position. Set Step Span dip−switches, bit 1 to **ON** and bits 2, 3, and 4 to **OFF**. (See Figure 3−7)

NOTE

In the following two steps, the sensor leads will be connected in series with the multimeter to measure current. Ensure the multimeter is set to the milliamps scale and the red multimeter lead is connected to the mA µA jack. Also, the use of an alligator clip (black) and spade terminal (red) for the multimeter lead probes will be required.

13. Connect the sensor wires and multimeter leads to the sensor board to measure current as follows:

    a. Reconnect the red (+) sensor lead to the sensor red terminal screw.

    b. Connect the black (–) sensor lead to the black alligator clip lead of the multimeter.

    c. Connect the red multimeter lead with spade tip to the sensor board black terminal screw. **Ensure the spade tip does not touch the sensor red terminal.**

14. Set the multimeter to read milliamps (mA/A) and move the red multimeter jack lead from the volt−ohm (V Ω) jack and insert it in the current measuring (mA µA) jack.

15. On the RDA Maintenance Panel UD5A2, set the DAU POWER switch to **ON**.

16. Adjust the ZERO potentiometer for a reading of +4.5 mA ± .05 mA. (See Figure 3−7)

17. Return to the equipment shelter. At the RDA Applications Terminal, enter **DIPD<space>TOW<Enter>**. Note the `GEN FUEL LEVEL`.

    GEN FUEL LEVEL = _____%

    Return to the generator shelter.

NOTE

The following step will require several trips back and forth between the generator shelter and the RDA shelter and updating the tower utility display (**DIPD<space>TOW<Enter>**). Allow enough time, approximately three minutes, for the computer to update.

18. If the GEN FUEL LEVEL noted in step 17 was 0%, increase the current in .05 mA increments using the ZERO potentiometer until the GEN FUEL LEVEL just starts to register a small non−zero 0%, then back off from that current .05 mA. In other words, we are looking for the potentiometer setting which *just indicates zero %*. Be sure to allow three minutes between adjustments to allow the GEN FUEL LEVEL to update. If the GEN FUEL LEVEL noted in step 17 was a small non−zero %, decrease the current in .05 mA increments until the GEN FUEL LEVEL *just indicates zero %*. This completes the setting of the ZERO potentiometer on the sensor assembly.

19. If the fuel level has not been measured using the folding ruler as yet, unfold the ruler to the 48−inch level and immerse the ruler into the fuel tank being sure not to drop the ruler into the tank. Extract the ruler and measure the "wet level" as below:

    Wet level = _____ inches

20. Calculate the % Fuel Level (measured) as follows:

    % Fuel Level (measured) = Wet Level (in) / 43 in.

    = _____ / 43

    = _____ %

    Where 43 inches is the Fuel Tank full level.

21. Proceed to the equipment shelter and turn **OFF** the DAU POWER switch. Return to the generator shelter.

22. Remove the red sensor lead and the red multimeter lead from the sensor terminal board.

23. Install the fuel sensor and reconnect the conduit and sensor wires as follows:

    a. Reinstall the sensor assembly in the fuel tank and rotate the sensor assembly clockwise until it is hand−tight.

    b. Using the 15" adjustable wrench, tighten the 2" nut which secures the sensor assembly to the fuel tank.

    c. Insert the sensor leads and conduit into the sensor assembly.

d. Reconnect the sensor leads to the red and black terminals.

e. Reinstall the plastic insulating cover over the terminals.

24. Return to the equipment shelter and turn **ON** the DAU POWER switch. At the RDA Applications Terminal, enter **DIPD<space>TOW<Enter>** and record the GEN FUEL LEVEL as follows:

GEN FUEL LEVEL = _____%

25. Adjust the SPAN potentiometer on the sensor assembly until the GEN FUEL LEVEL is equal to the % Fuel Level (recorded in step 20 ± 3%). A single turn CW of the potentiometer will increase the GEN FUEL LEVEL by approximately 7%. This may require the SPAN potentiometer to be set to its fully CW position to obtain required reading. Check the results of the adjustment at the Applications Terminal by entering **DIPD<space>TOW<Enter>**. Allow approximately three minutes between adjustment for the GEN FUEL LEVEL to update. Once the displayed GEN FUEL LEVEL indicates the recorded value from step 20 ± 3%, the calibration procedure is complete.

26. Replace the cover on the fuel level sensor assembly, and clean up any fuel which may have been dripped on the fuel tank top.

27. Return the generator to the “ready” status by performing the following:

    a. At the Kohler generator control panel, perform the following steps:

        1) Rotate the emergency stop button 1/4 turn clockwise until the button pops **OUT**.

        2) Set the RUN−OFF/RESET−AUTO switch to **AUTO**.

    b. At the Onan generator control panel, perform the following steps:

        1) Pull the emergency stop button **OUT**.

        2) Set the RUN−STOP(RESET)−REMOTE switch to **REMOTE.**

28. At the RDA Maintenance Terminal Applications screen command and parameter lines enter, **TERP<Tab>***password***<Enter>** (the default password is FLOYD) to terminate the applications program.

29. Press the <**Alt**> and <**Tab**> keys or use the mouse and click on the RDA Systems Console screen to access the RDA Systems Console * prompt. Wait for the applications program to terminate before proceeding.

30. At the RDA Systems Console * prompt, enter **RDAUP<Enter>** to restart the applications program.

31. Press the <**Alt**> and <**Tab**> keys or use the mouse and click on the RDA Applications Terminal screen to access the main menu.

32. At the RDA Applications Terminal main menu, enter the following to return control of the system to the MSCF:

    a. **OPER<Enter>**.

    b. **ENRC<Enter>**.

3−6.7 TIME DELAY RELAY (TD1) CHECKOUT.

This procedure provides instructions on how to check the operation of the replacement relay.

3−6.7.1 Equipment and Tools Required.

None

3−6.7.2 Initial Conditions/Preliminary Setup.

None

3−6.7.3 Adjustment Procedure.

1. At the Auto−Transfer Switch front panel, set the Auto/Manual transfer selector switch to the **AUTO** position.

2. Set the Test/Auto/Re−Transfer key switch on the front panel to the Test position and observe the following:

    a. The generator starts and runs after the Time Delay Engine Start (TDES) has completed timing.

    b. The Time Delay On End Normal−to−Emergency panel LED indicator illuminates, then the Accessory Active Load Shed panel LED indicator illuminates and all distribution power is dropped from the circuit.

    c. The Auto−Transfer Switch Assembly contactor transfers to the generator (auxiliary) power source.

    d. Time Delay Relay TD1 times for 6 seconds before reenergizing AC power distribution from the Auto−Transfer Switch Assembly.

3. Set the Test/Auto/Re−Transfer key switch to Auto and observe the following:

    a. After the Time Delay On End Emergency−to−Normal panel LED illuminates, the Load Shed panel LED illuminates and the AC power distribution is dropped from the circuit.

    b. The Auto−Transfer Switch Assembly contactor transfers to the utility power source.

    c. Time Delay Relay TD1 times for 6 seconds before reenergizing AC power distribution from the Auto−Transfer Switch Assembly.

d. The generator switches to the unloaded Time Delay Engine Cool−down running mode as indicated by the panel LED becoming illuminated.

e. After Time Delay Engine Cool−down timeout, the panel LED goes out and the generator shuts down.

4. For normal utility power operation, ensure that all switches on the Auto−Transfer Switch front panel and generator control panel are set as indicated in Table 2−1, steps 2 and 4 (Onan) or steps 3 and 5 (Kohler).

3−6.8 HATCH INTERLOCK SWITCH ADJUSTMENT.

The personnel access hatch can shift, causing the interlock switch plunger to be only partially depressed. This may result in a false hatch open alarm signal which will cause a system shutdown. This procedure requires two technicians.

3−6.8.1 Equipment and Tools Required.

1. Screwdriver set

3−6.8.2 Initial Conditions/Preliminary Setup.

WARNING

Failure to power−down the radar transmitter and pedestal drive can cause damage to the equipment and serious injury or **DEATH**.

1. Obtain control from the MSCF, place the transmitter in standby, and remove high voltage by performing RDA equipment shutdown procedures per paragraph 3−5.4, steps 1, 2, and 4.

2. On the RDA Maintenance Panel UD5A2, set the PEDESTAL ELECTRONICS POWER switch to **OFF**.

3. Place a SAFETY WARNING tag on the RDA Maintenance Panel UD5A2.

4. At the RDA Secondary PDP UD7A3, set ganged circuit breaker CB2, 4, and 6, Pedestal Motor Power, to **OFF** and install lockout/tagout.

5. In the radome, set the antenna pedestal PWR ON/SAFE switch to **SAFE**.

3−6.8.3 Adjustment Procedure.

1. Locate the Hatch Interlock Switch UD11S2 to be adjusted. At some sites, the switch is located opposite the hinges and at other sites, the switch is located on the same side as the hinges.

2. When the hatch is closed, the switch plunger should be fully depressed, if not, perform either step 3 or 4.

3. Coarse Adjustment. Loosen the two screws securing the switch. Slide the switch body upward in its mounting slots until the plunger is fully depressed. Tighten the screws to lock the switch body in this position.

4. Fine Adjustment. Open the hatch and rotate the head of the plunger so as to increase or decrease its effective length. Close the hatch and check that plunger is fully depressed.

5. Set the antenna pedestal PWR ON/SAFE switch to **PWR ON** before descending to the RDA shelter.

6. At the RDA Secondary PDP UD7A3, remove the lockout/tagout and set ganged circuit breaker CB2, 4, and 6, Pedestal Motor Power, to **ON**.

7. On the RDA Maintenance Panel UD5A2, set the PEDESTAL ELECTRONICS POWER switch to **ON**. Remove the SAFETY WARNING tag.

8. Perform transmitter power−up procedures and return control of the system to the MSCF by performing paragraph 3−5.5, steps 4 and 5.

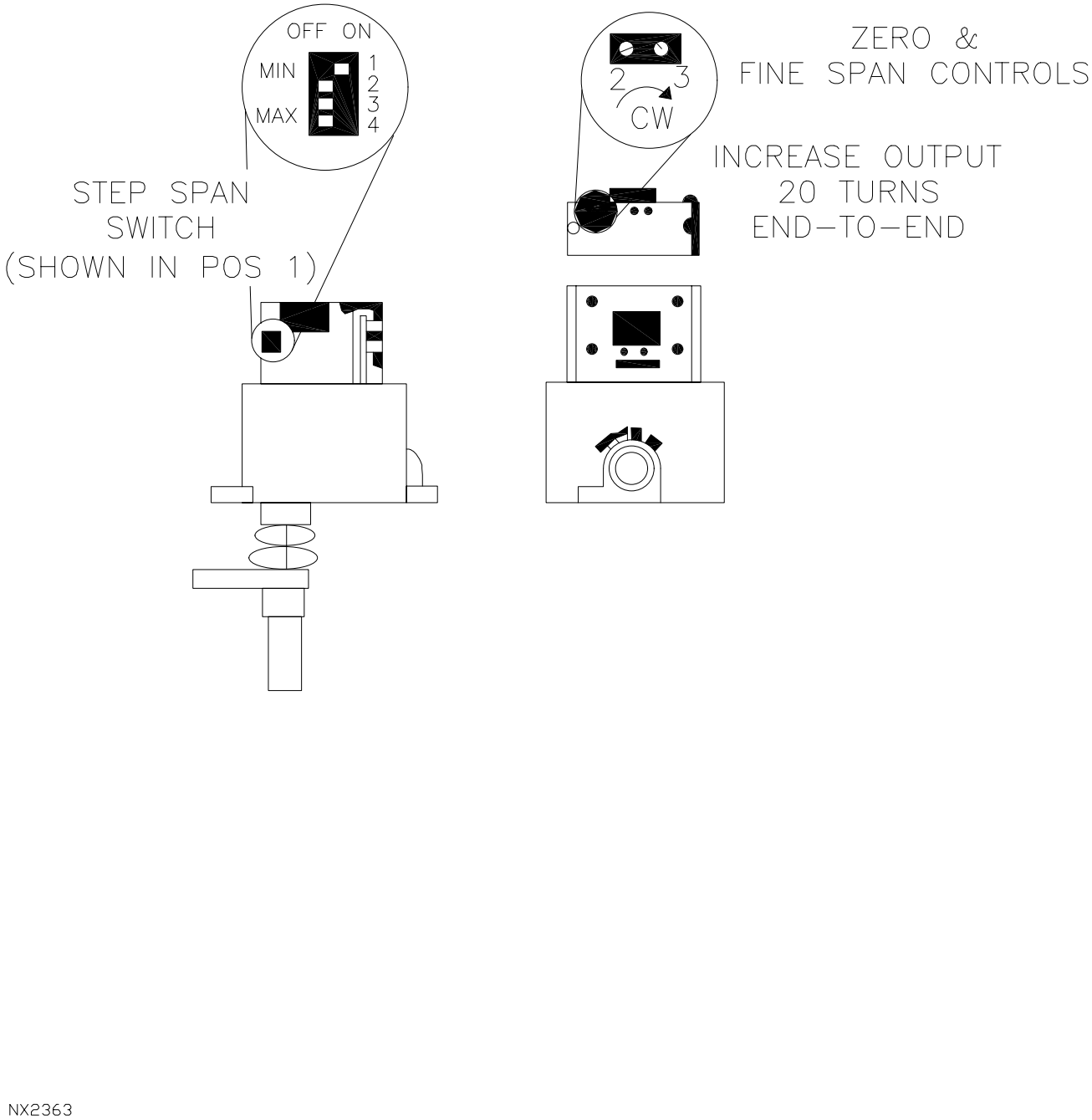

Figure 3−7. Step Span Switch and Zero and Span Controls

CHAPTER 4

WIRING DIAGRAMS

SECTION 4−1. GENERAL DESCRIPTION

4−1.1 GENERAL DESCRIPTION.

This chapter is divided into the following two sections:

- Section 4−1 General Description
- Section 4−2 Wiring Diagrams

This chapter contains wiring and functional diagrams with associated data to perform required maintenance on the Real Property Installed Equipment (RPIE) system.

SECTION 4−2. WIRING DIAGRAMS

4−2.1 WIRING DIAGRAMS.

Figure 4−1 through Figure 4−12, and Figure FO4−1 through Figure FO4−16 provide wiring information for the site.

- Radome Sensor Diagram (Figure 4−1)
- Generator Shelter Fire Detection Circuit (Figure 4−2)
- Radome Temperature Sensor and RTD Circuitry (Figure 4−3)
- Generator Control Panel Alarm and Control Circuitry (Figure 4−4, Onan; Figure 4−5, Kohler)
- Auto Transfer Switch Power Distribution Circuitry (Onan and Kohler) (Figure 4−6)
- Transmitter Venting Circuitry (Figure 4−7)
- Radome Venting Circuitry (Figure 4−8)
- Generator Shelter Venting Circuitry (Figure 4−9)
- Radome, Equipment Shelter Standard Telephone (Intercom) Circuit Diagram (Figure 4−10)
- Radome, Equipment Shelter Sound Powered Telephone (Intercom) Circuit Diagram (Figure 4−11)
- MLOS Shelter Power Distribution (Figure 4−12)
- RDA Logic and Control for RDA Shelter Power Distribution (Onan) (Figure FO4−1)
- RDA Logic and Control for RDA Shelter Power Distribution (Kohler) (Figure FO4−2)
- RPIE Analog Status Data Processing Functional Flow Diagram (Figure FO4−3)
- RPIE Discrete Status Data Monitoring Functional Flow Diagram (Figure FO4−4, Onan and TPMS; Figure FO4−5, Kohler and TPMS)
- Generator Shelter (Onan) Sensor Inputs (Figure FO4−6)
- RDA Sensor Wiring Diagram (Figure FO4−7, Onan; Figure FO4−8, Kohler)
- Auto Transfer Switch AC Power Distribution Diagram (Figure FO4−9, Onan; Figure FO4−10, Kohler)
- Auto Transfer Switch Flow Chart (Figure FO4−11, Onan; Figure FO4−12, Kohler)
- TPMS Discrete Status Data Monitoring Functional Flow Diagram (Figure FO4−13)
- TPS Schematic Diagram, Top Level, Powerware Plus 80 (Figure FO4−14)
- TPS Schematic Diagram, Battery Cabinet 685/1085 (Figure FO4−15)
- TPS Schematic Diagram, Supervisory Contact Board (Figure FO4−16)

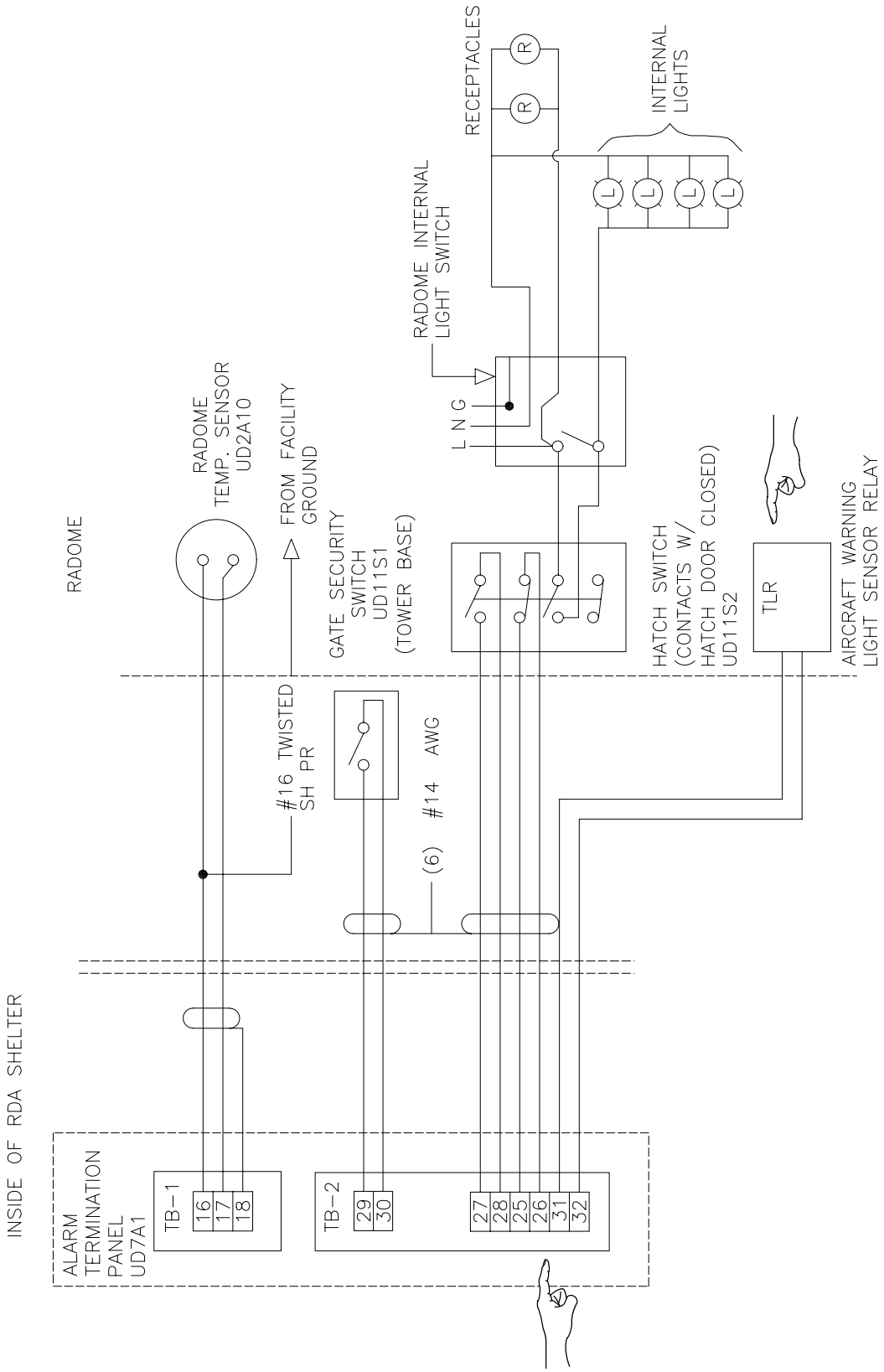

Figure 4−1. Radome Sensor Diagram

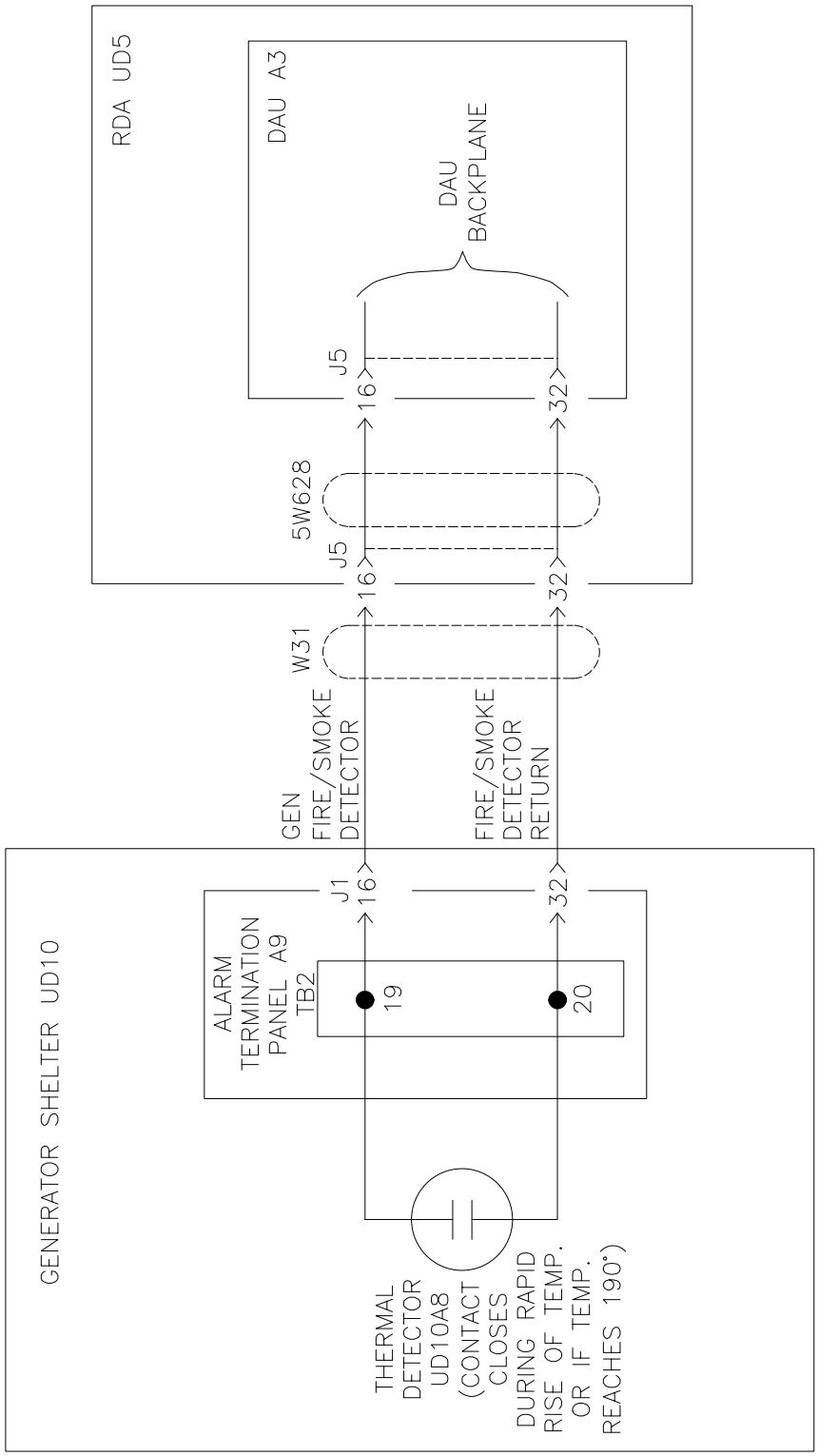

NX2364

Figure 4−2. Generator Shelter Fire Detection Circuit

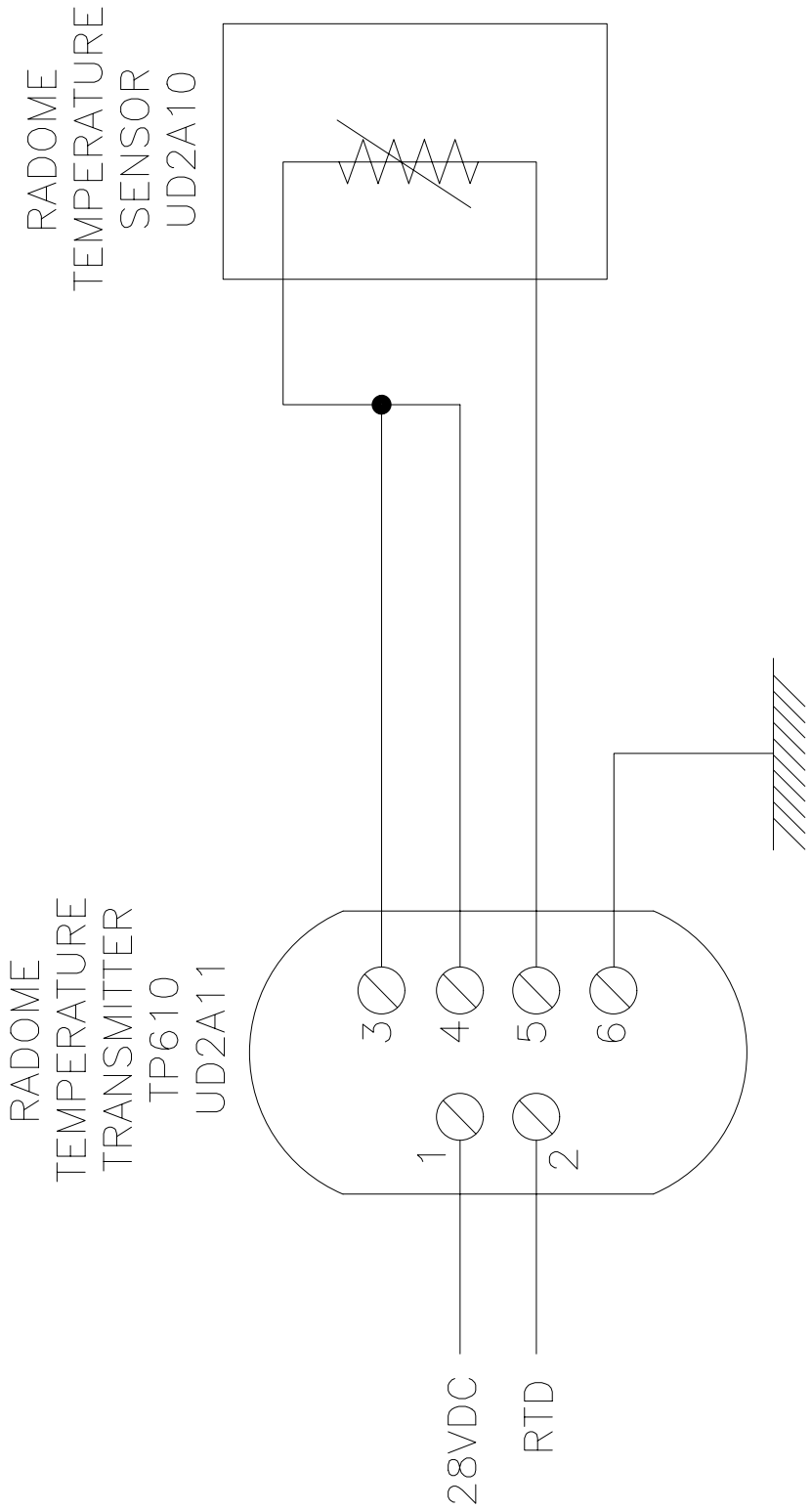

NX2365

Figure 4−3. Radome Temperature Sensor and RTD Circuitry

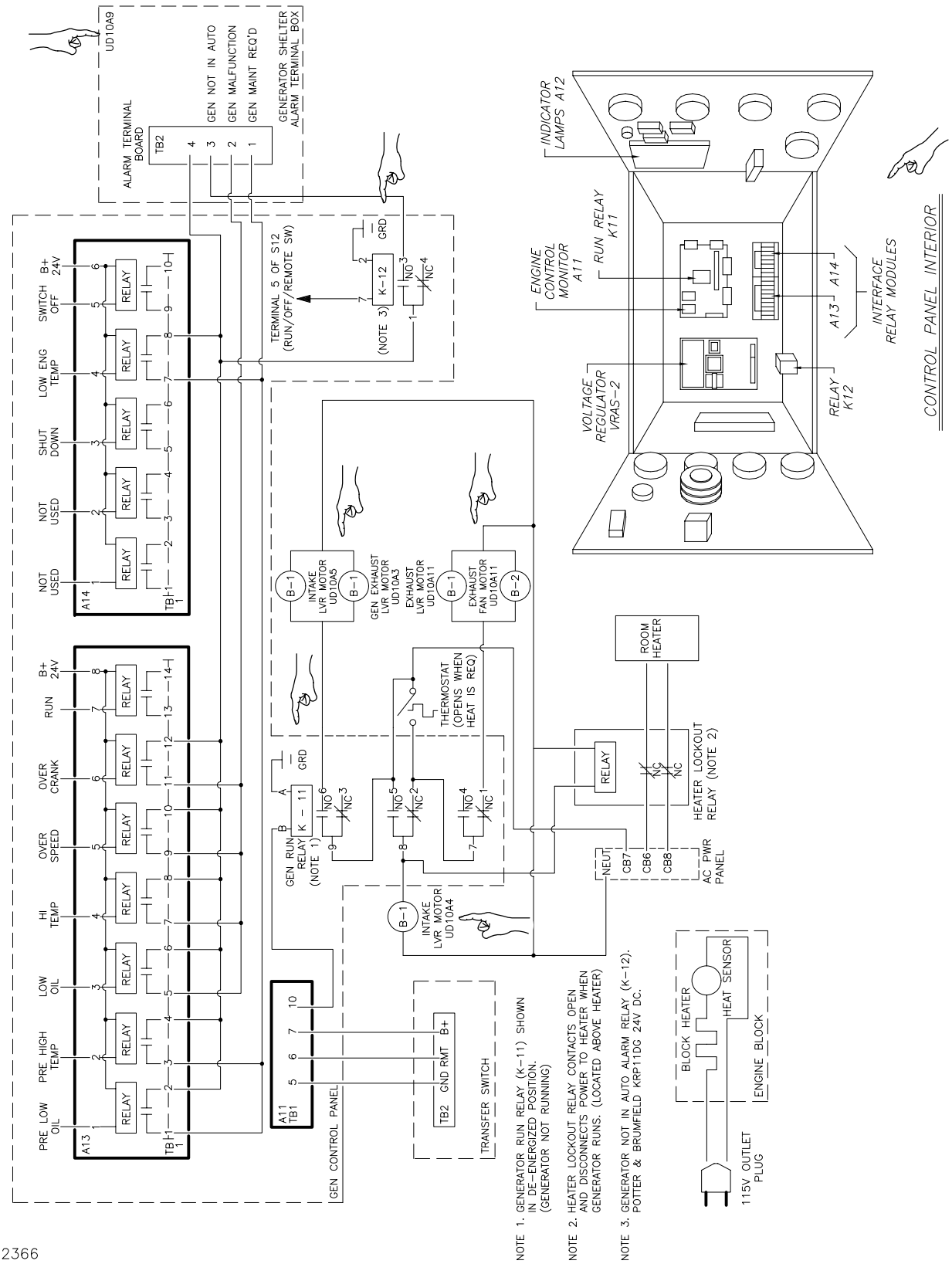

Figure 4−4. Generator Control Panel Alarm and Control Circuitry (Onan Generator)

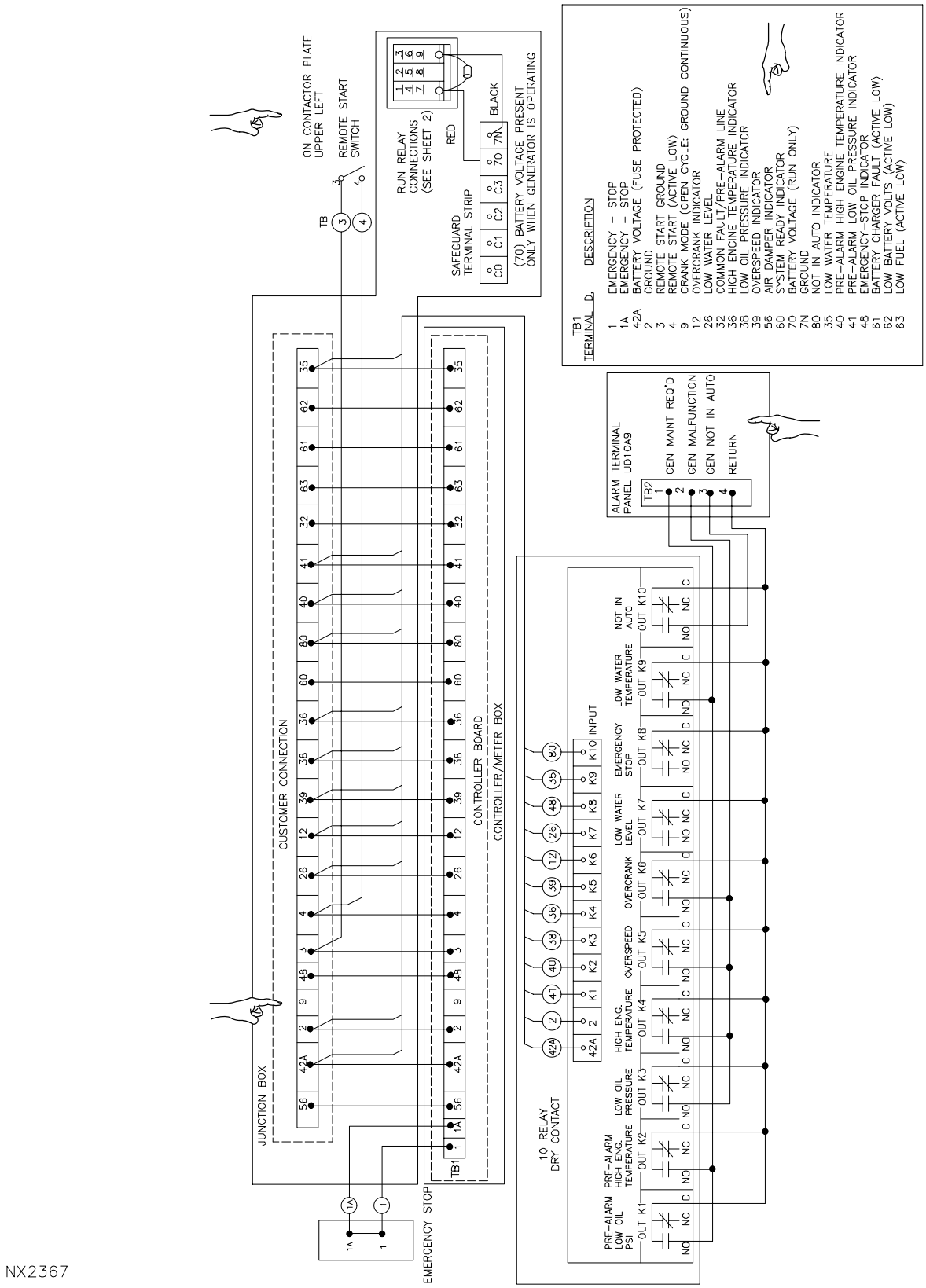

NX2367

Figure 4−5. Generator Control Panel Alarm and Control Circuitry (Kohler Generator) (Sheet 1 of 2)

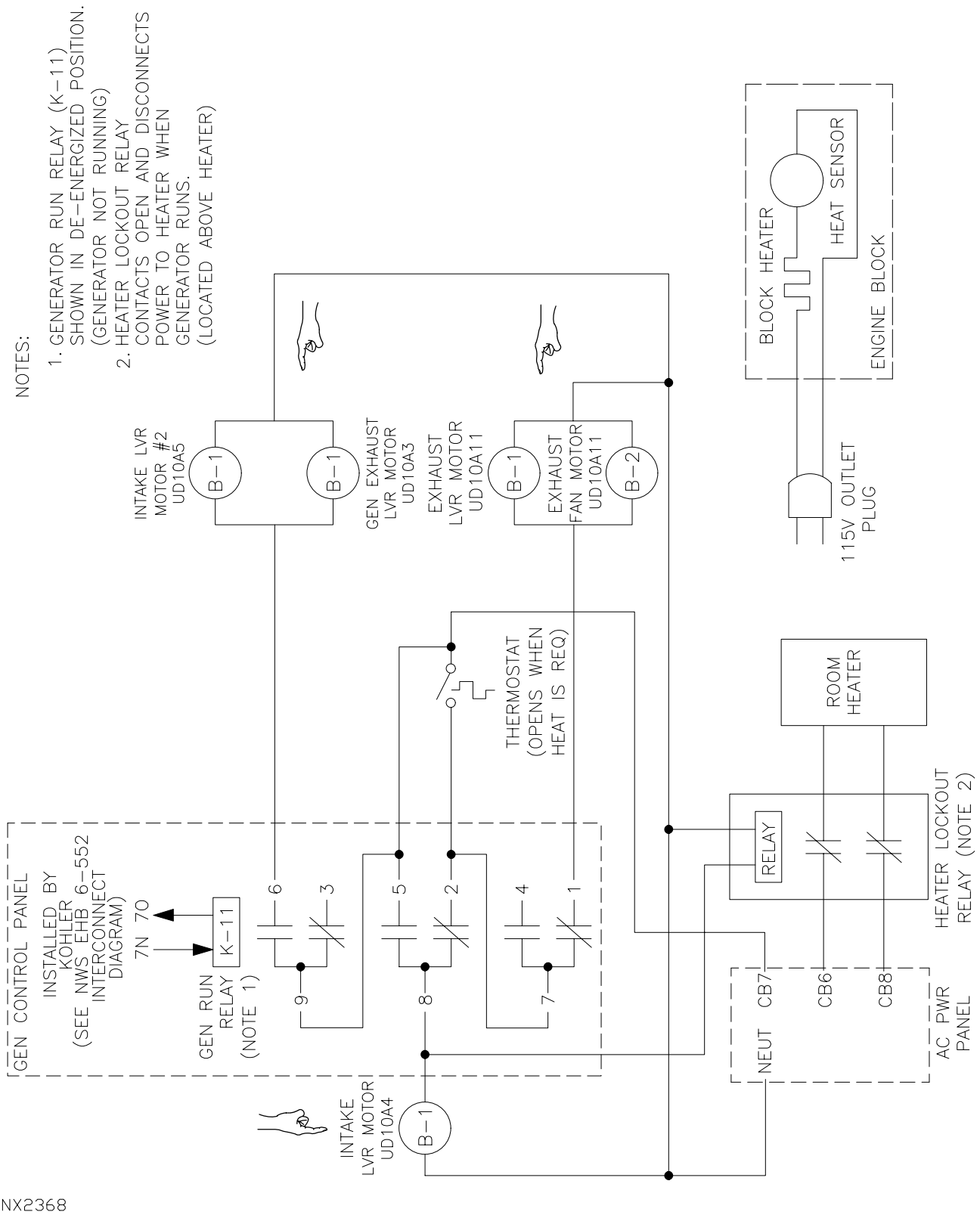

Figure 4−5. Generator Control Panel Alarm and Control Circuitry (Kohler Generator) (Sheet 2 of 2)

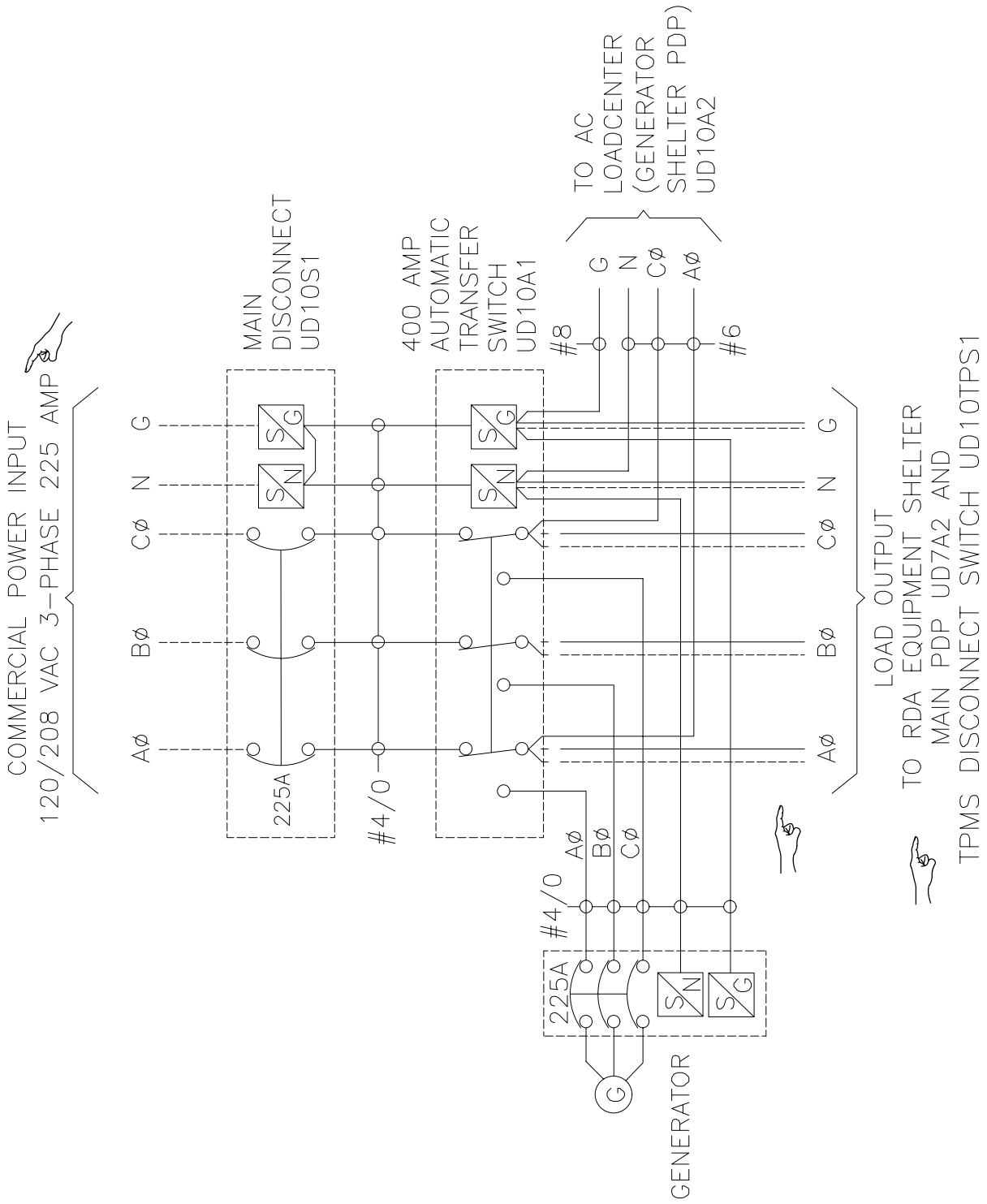

Figure 4−6. Auto−Transfer Switch Power Distribution Circuitry (Onan and Kohler Generators)

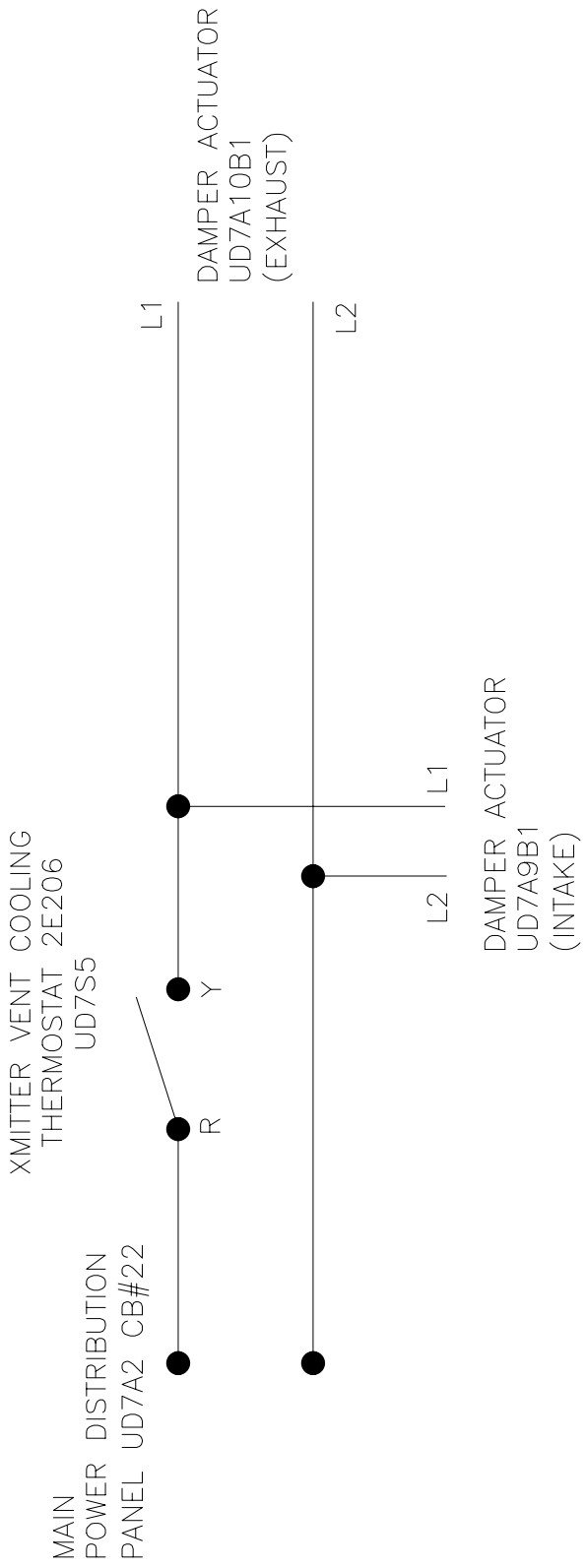

Figure 4−7. Transmitter Venting Circuitry

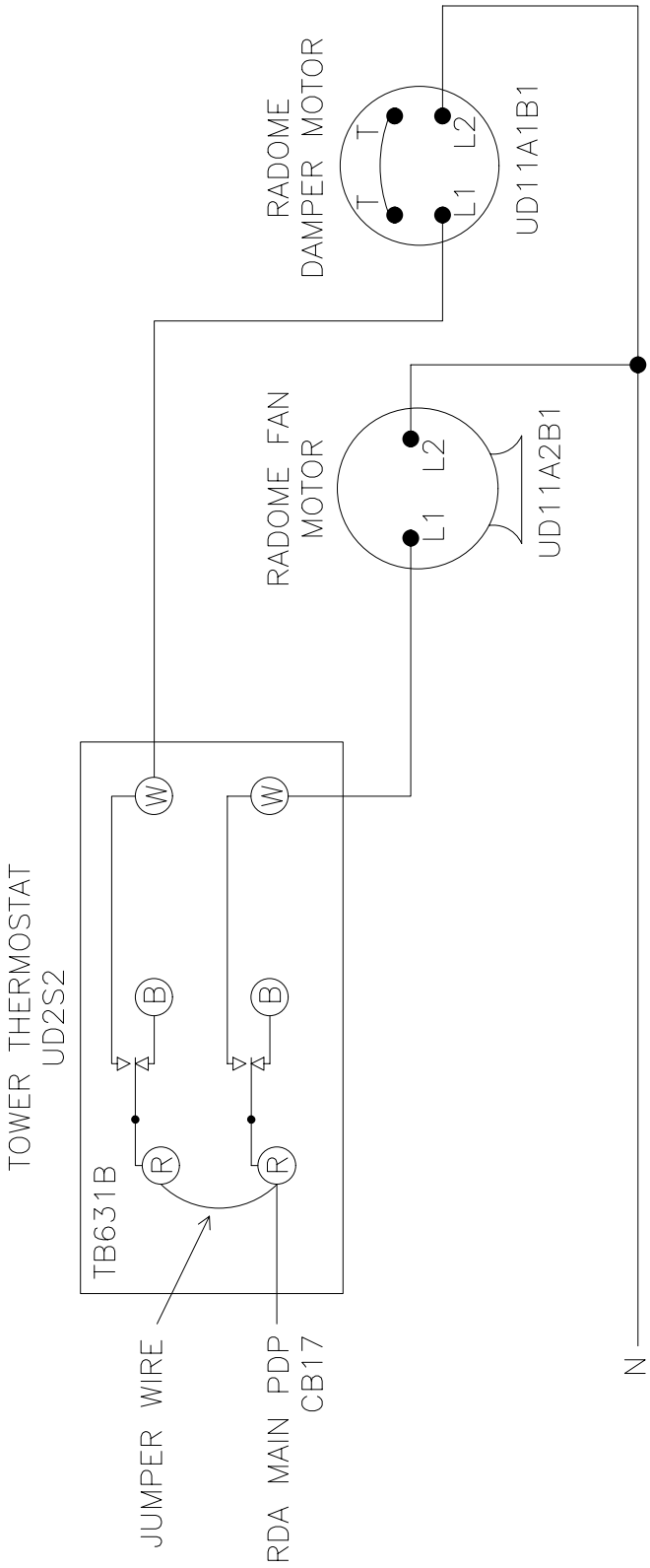

NX2371

Figure 4−8. Radome Venting Circuitry

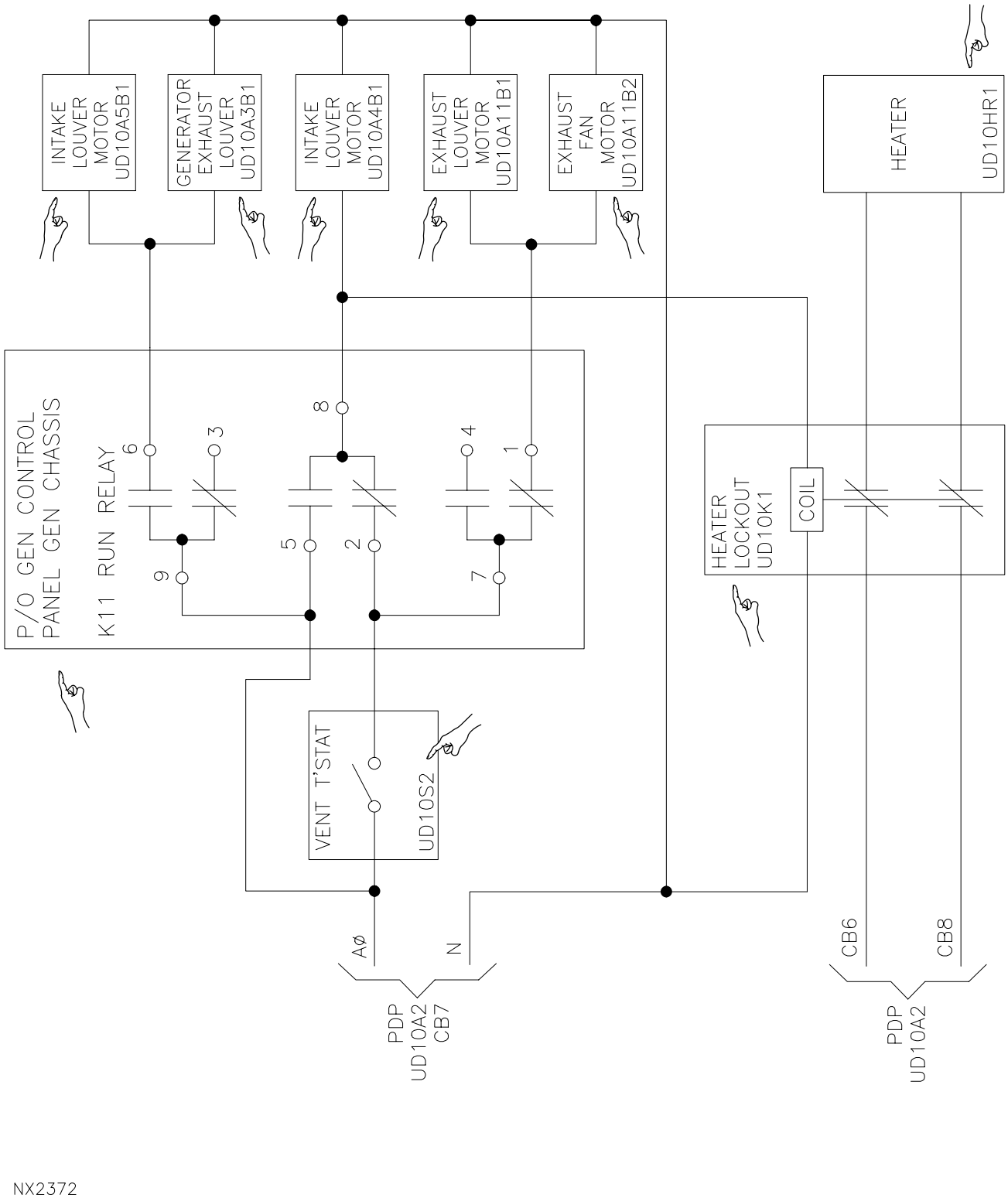

Figure 4−9. Generator Shelter Venting Circuitry

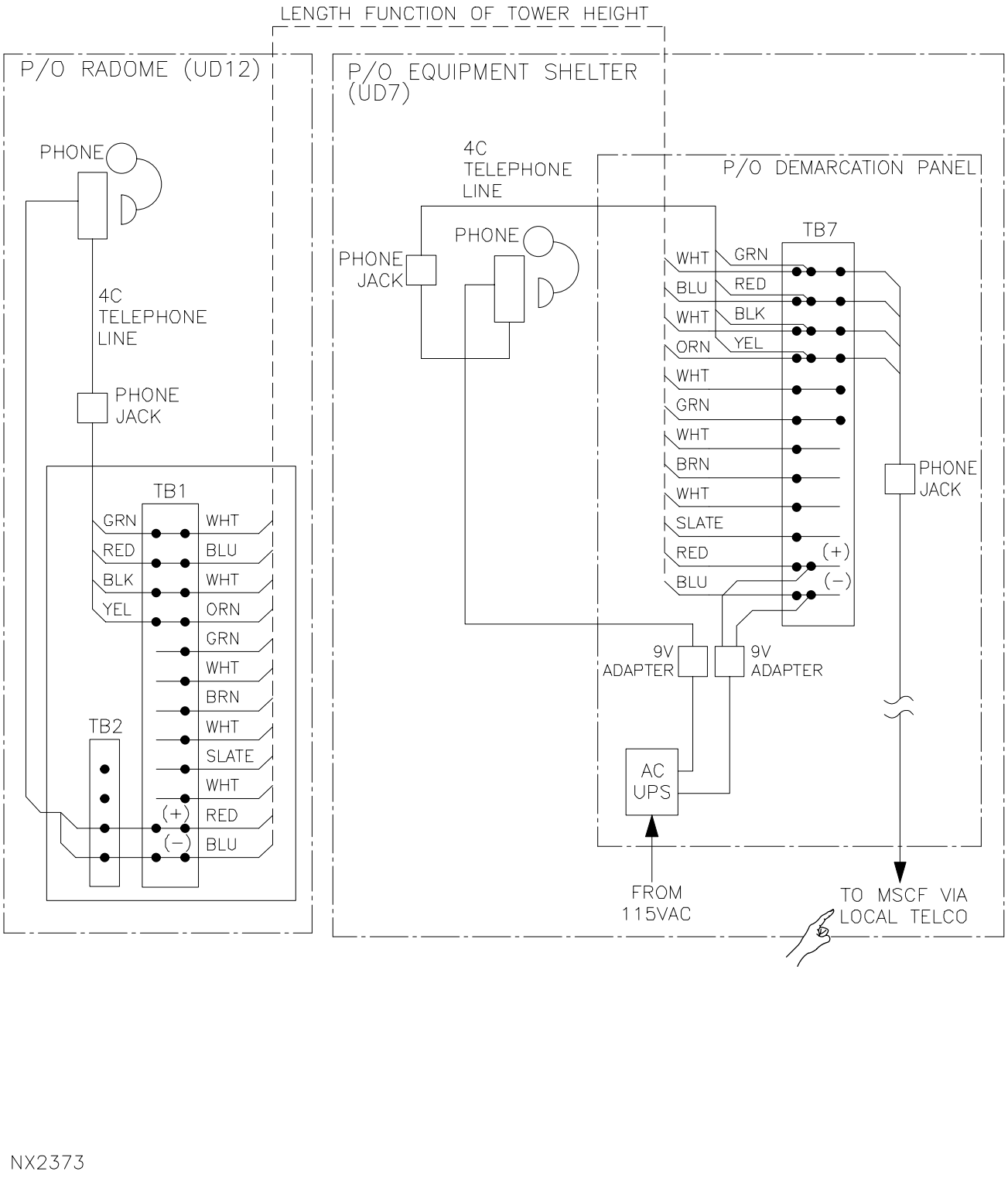

Figure 4−10. Radome, Equipment Shelter Standard Telephone (Intercom) Circuit Diagram

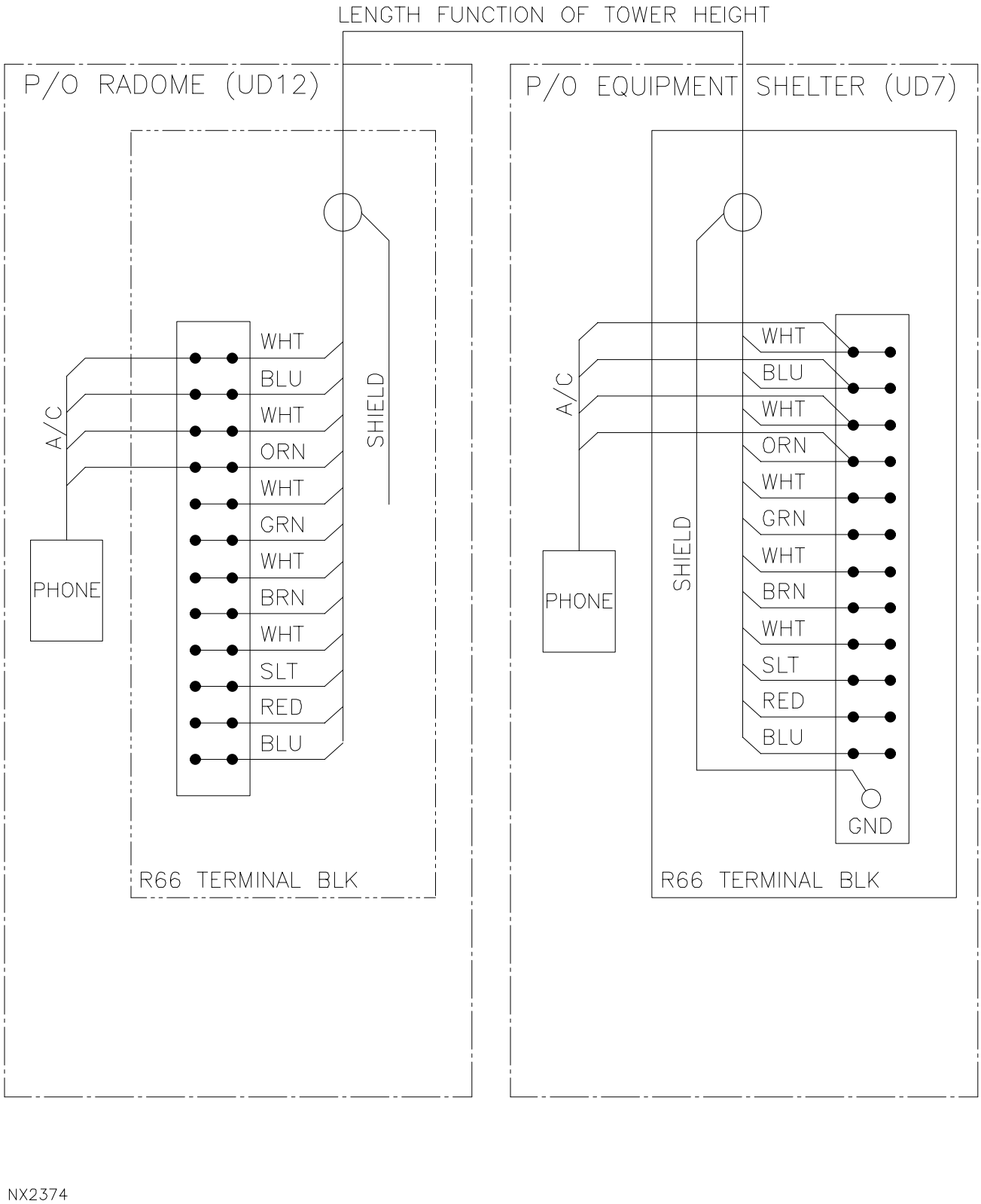

Figure 4−11. Radome, Equipment Shelter Sound Powered Telephone (Intercom) Circuit Diagram

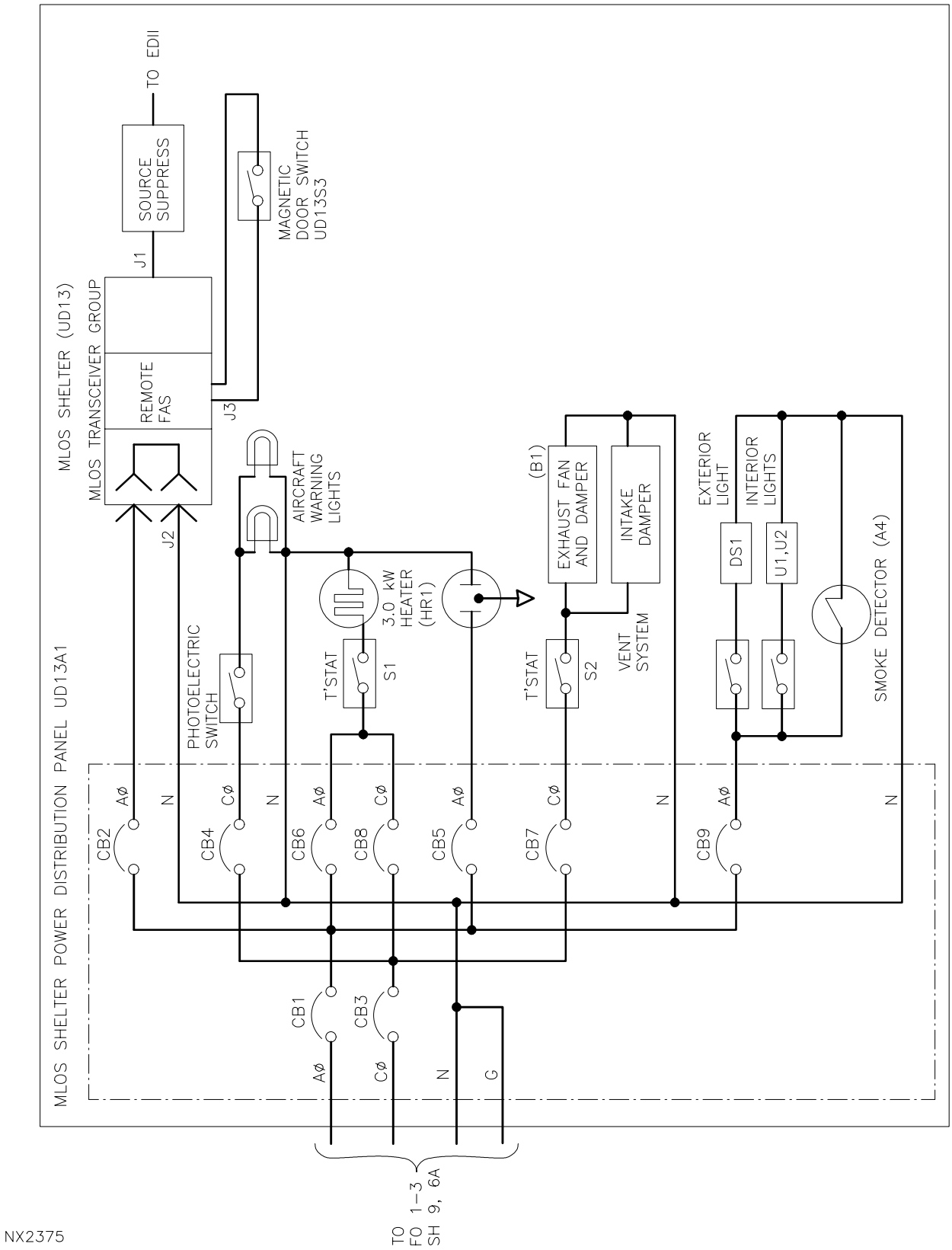

Figure 4−12. MLOS Shelter Power Distribution

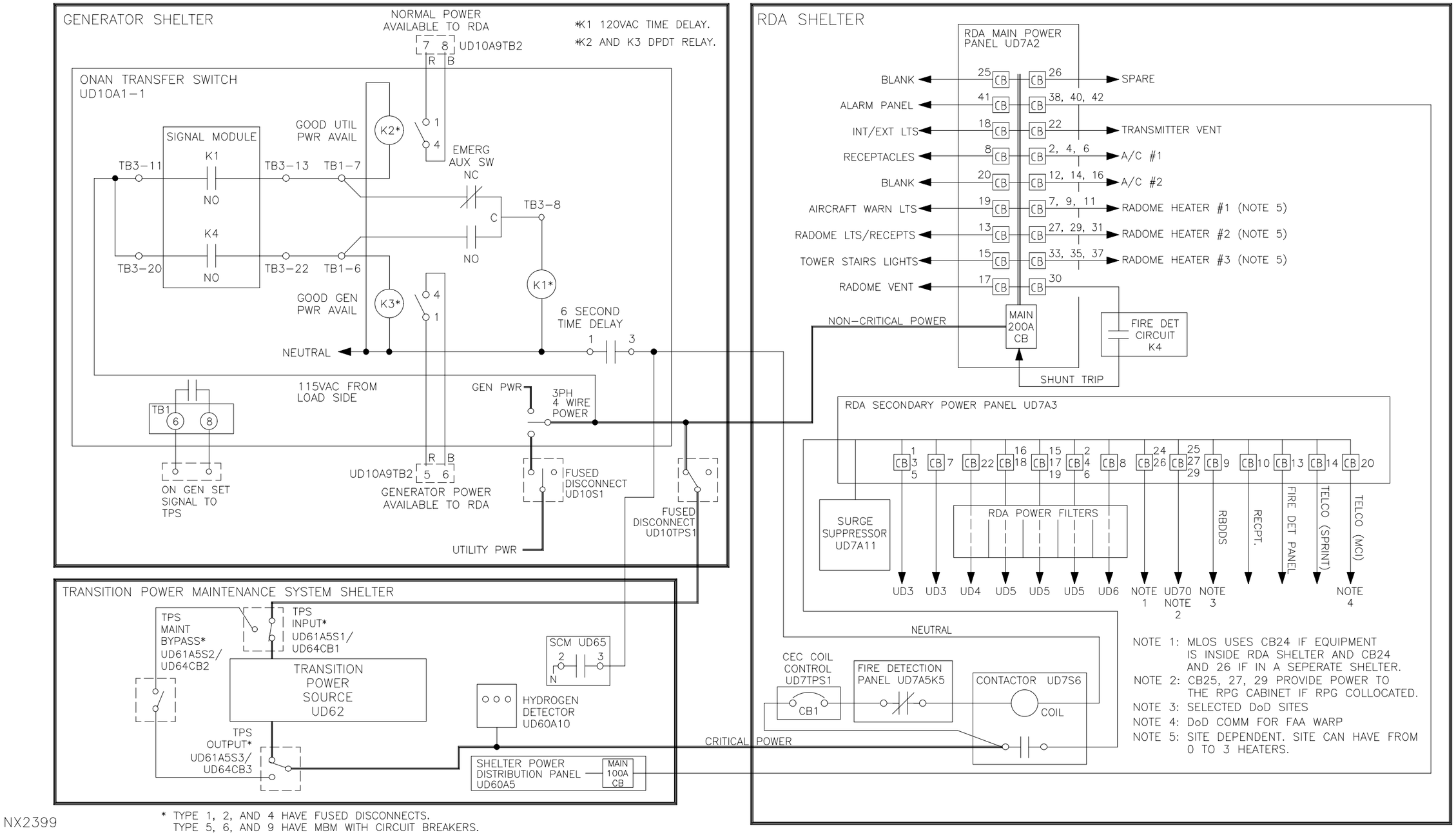

Figure FO4-1. RDA Logic and Control for RDA Shelter, Power Distribution (Onan)

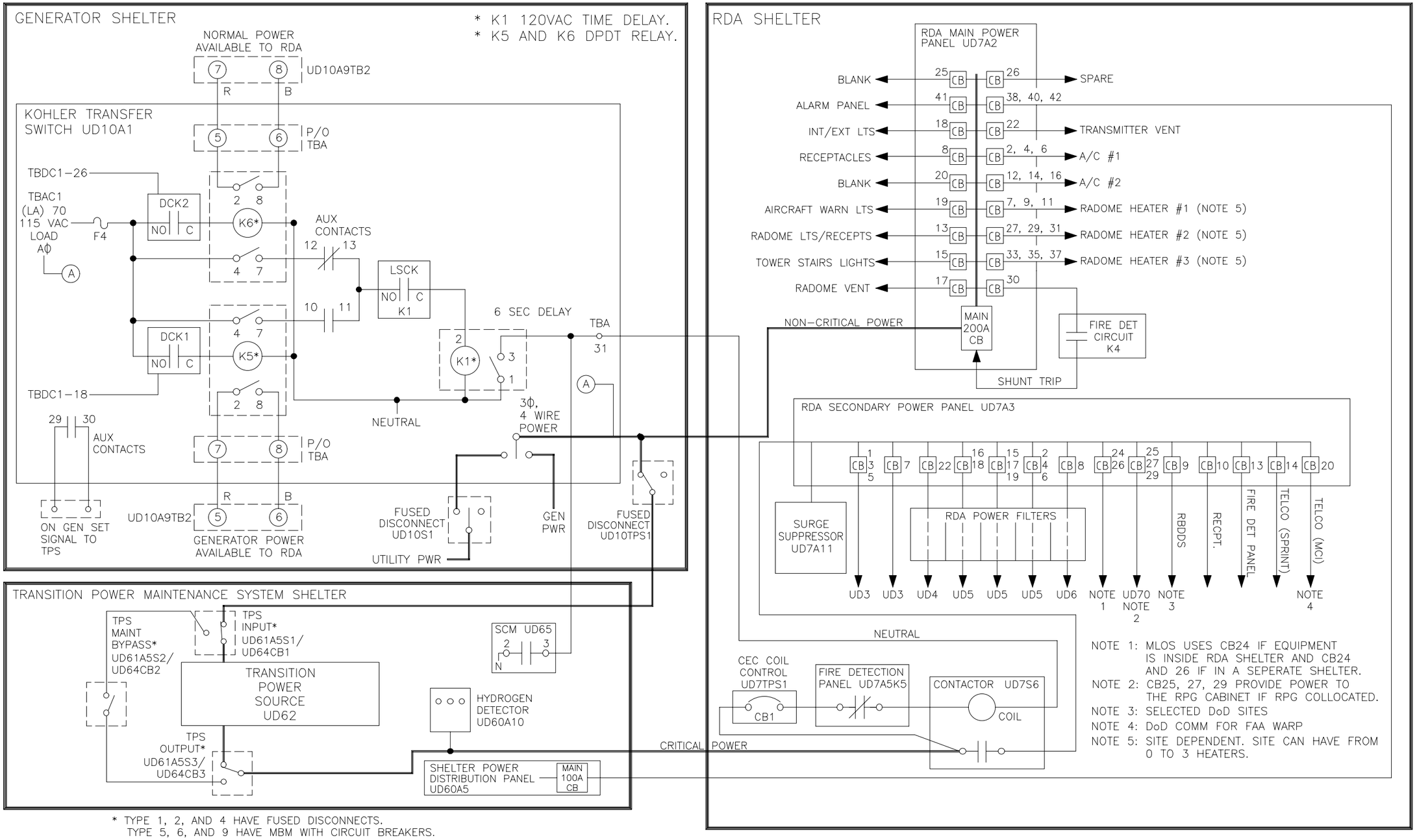

Figure FO4-2. RDA Logic and Control for RDA Shelter, Power Distribution (Kohler)

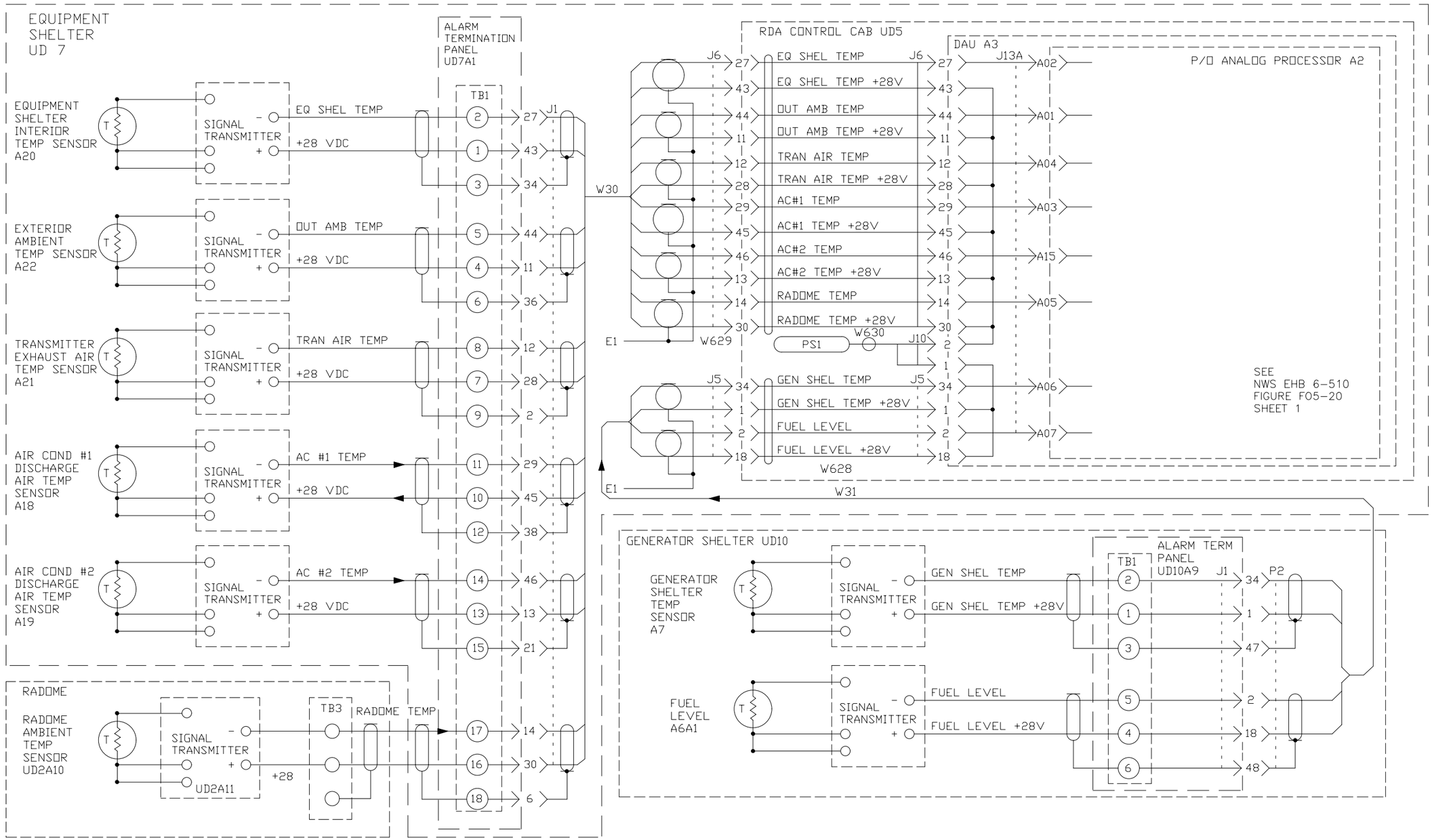

Figure FO4-3. RPIE Analog Status Data Processing, Functional Flow Diagram

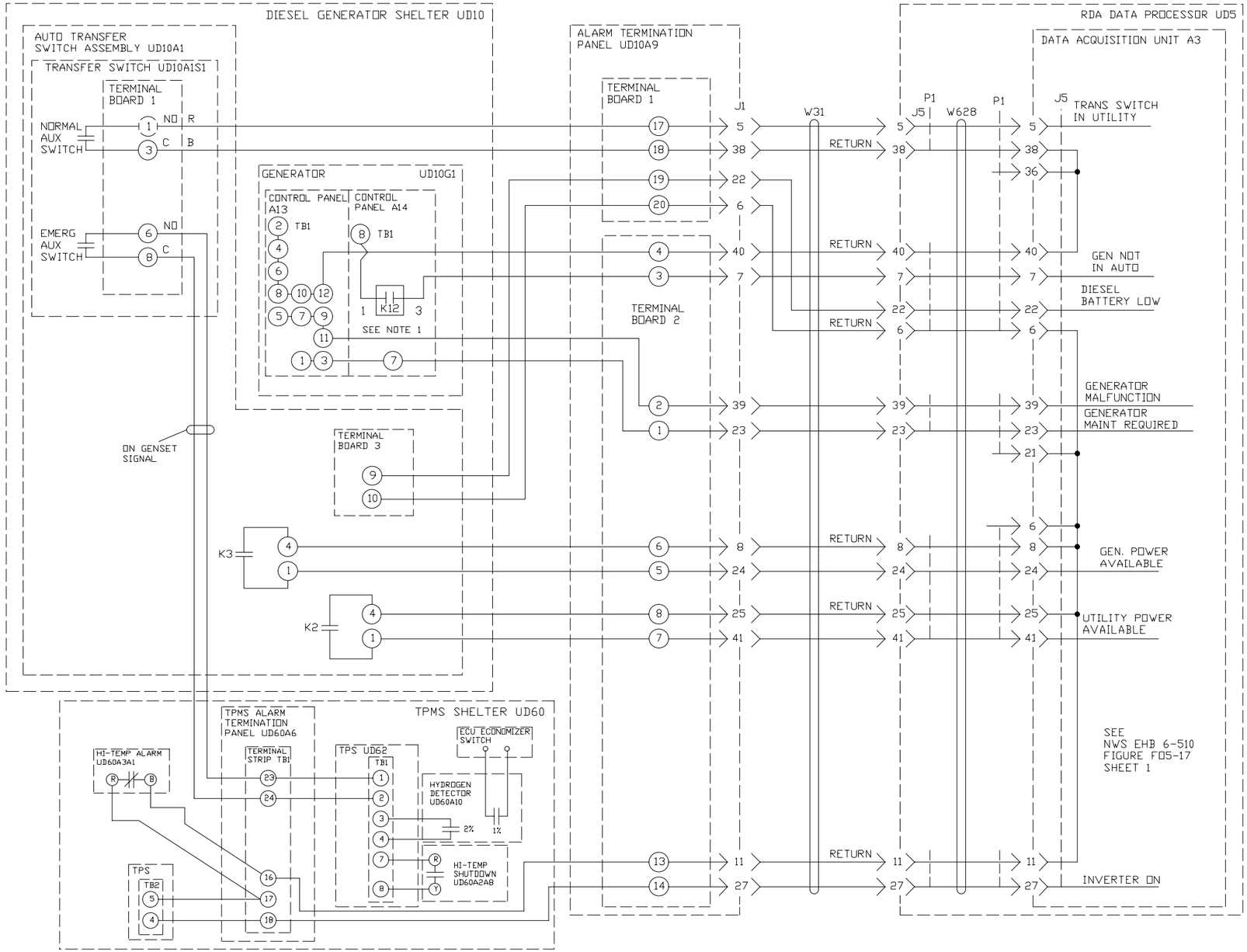

NX2403

Figure FO4-4. RPIE Discrete Status Data Monitoring Functional Flow Diagram (Onan Generator and TPMS) (Sheet 1 of 2)

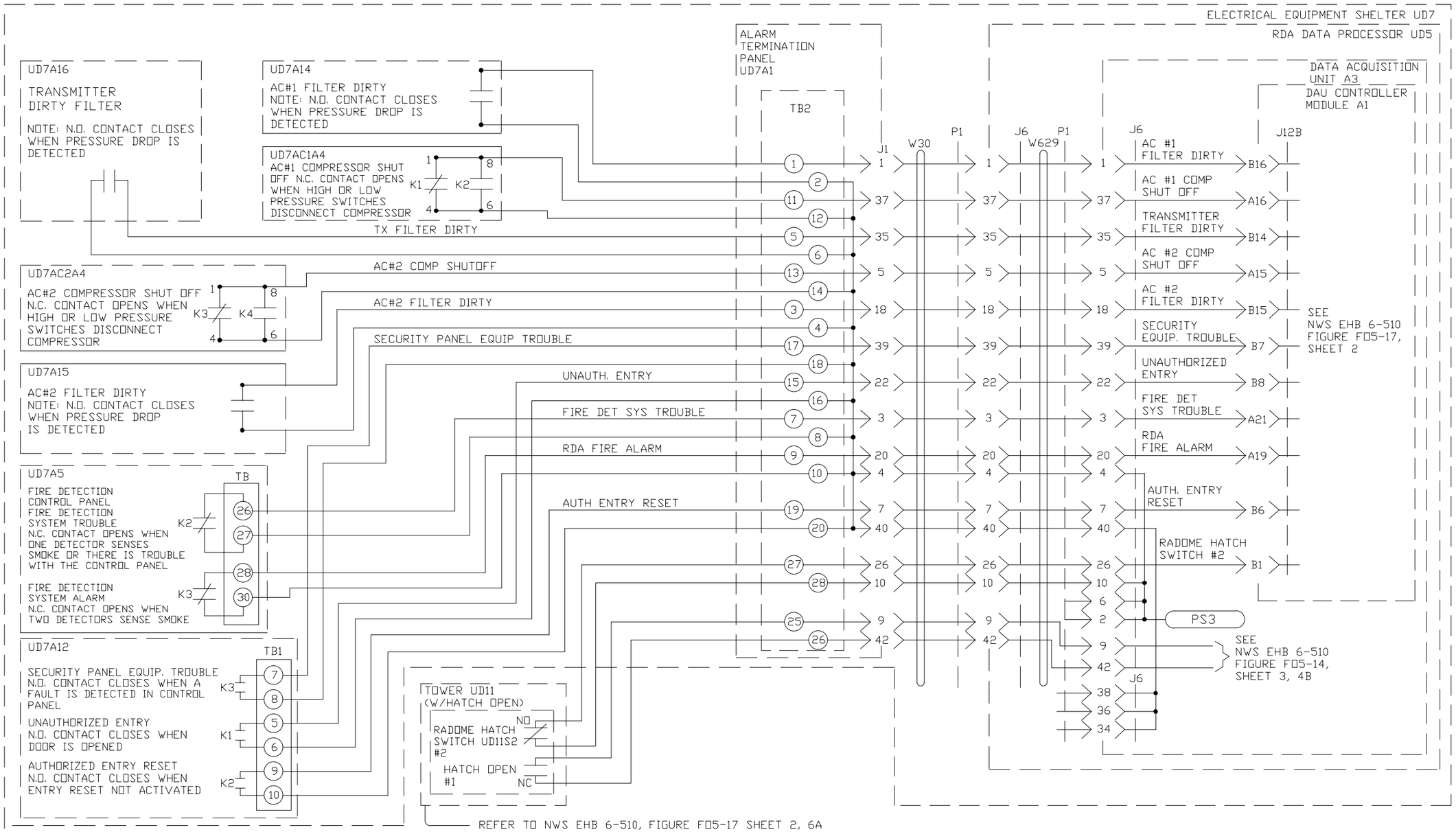

Figure FO4-4. RPIE Discrete Status Data Monitoring Flow Diagram (Onan Generator and TPMS) (Sheet 2 of 2)

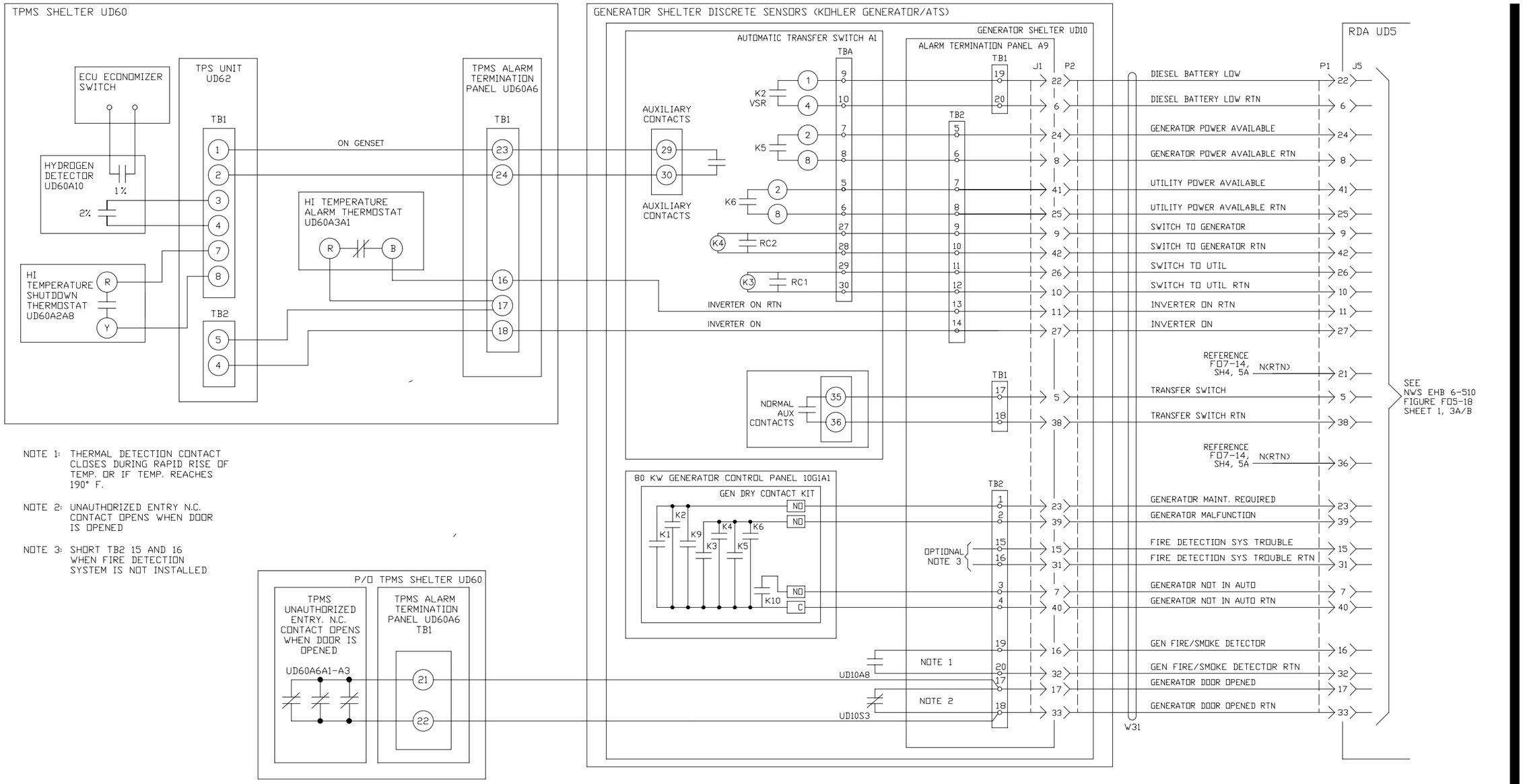

Figure FO4-5. RPIE Discrete Status Data Monitoring Functional Flow Diagram (Kohler Generator and TPMS) (Sheet 1 of 2)

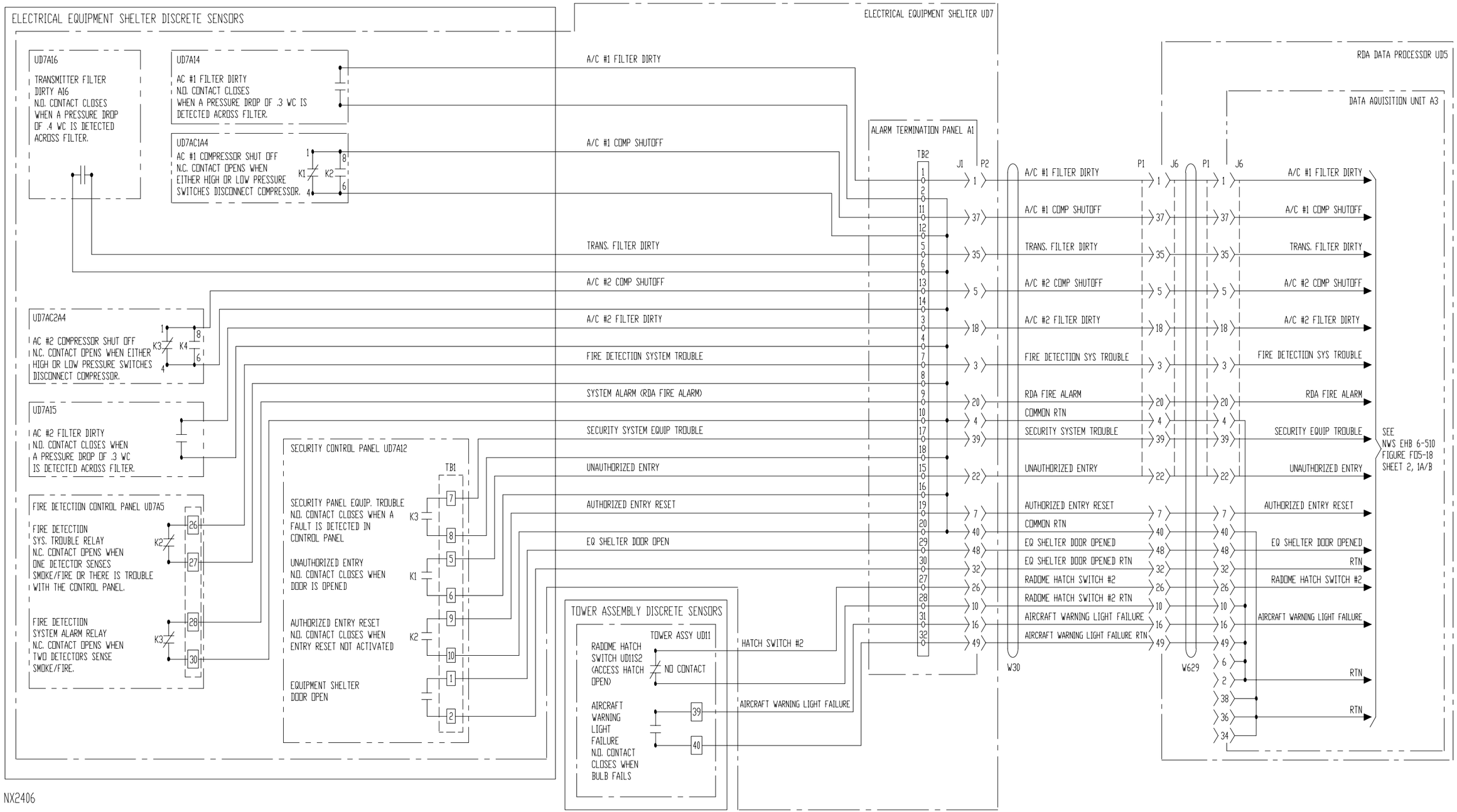

Figure FO4-5. RPIE Discrete Status Data Monitoring Functional Flow Diagram (Kohler Generator and TPMS) (Sheet 2 of 2)

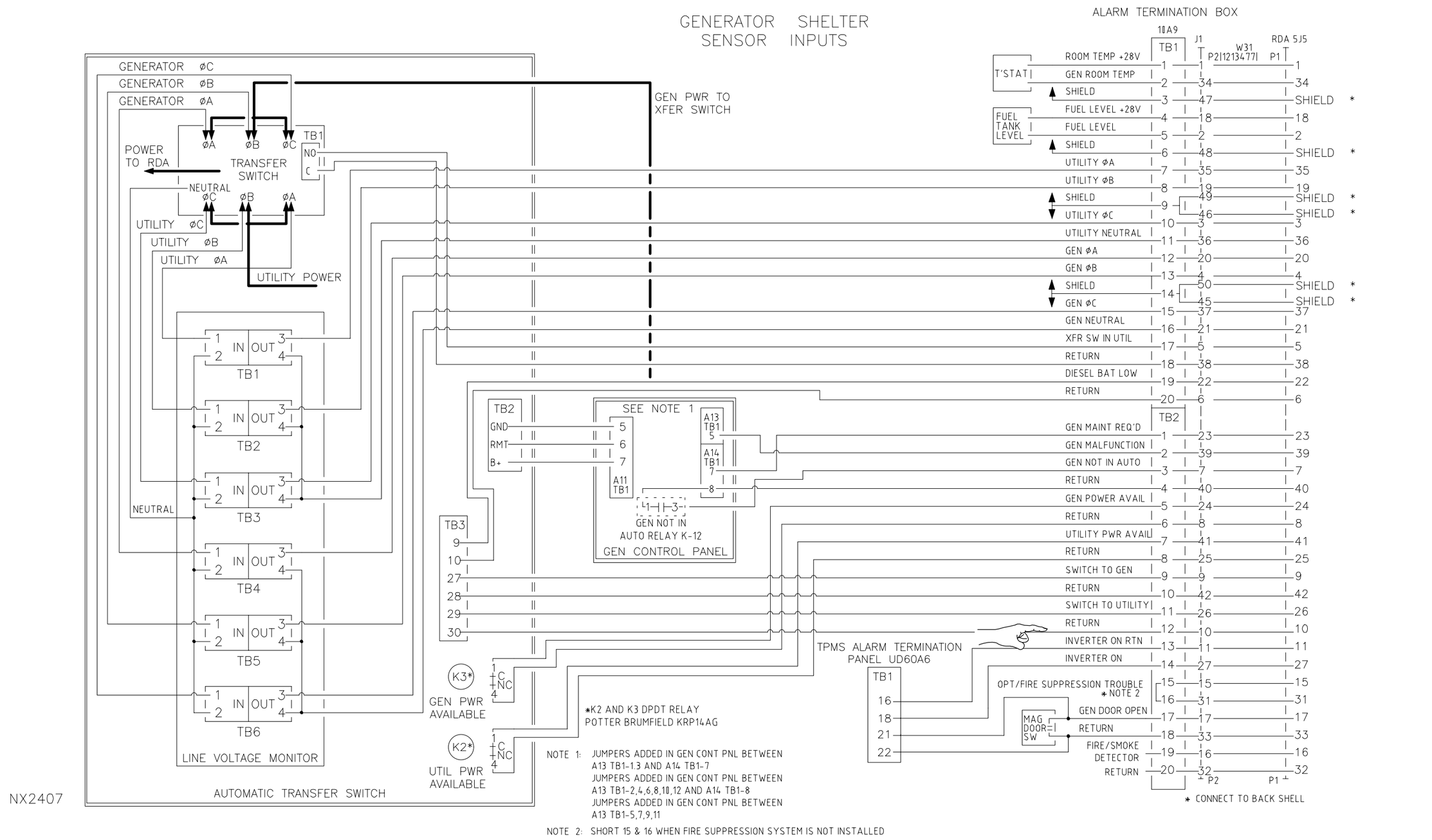

Figure FO4-6. Generator Shelter (Onan) Sensor Inputs

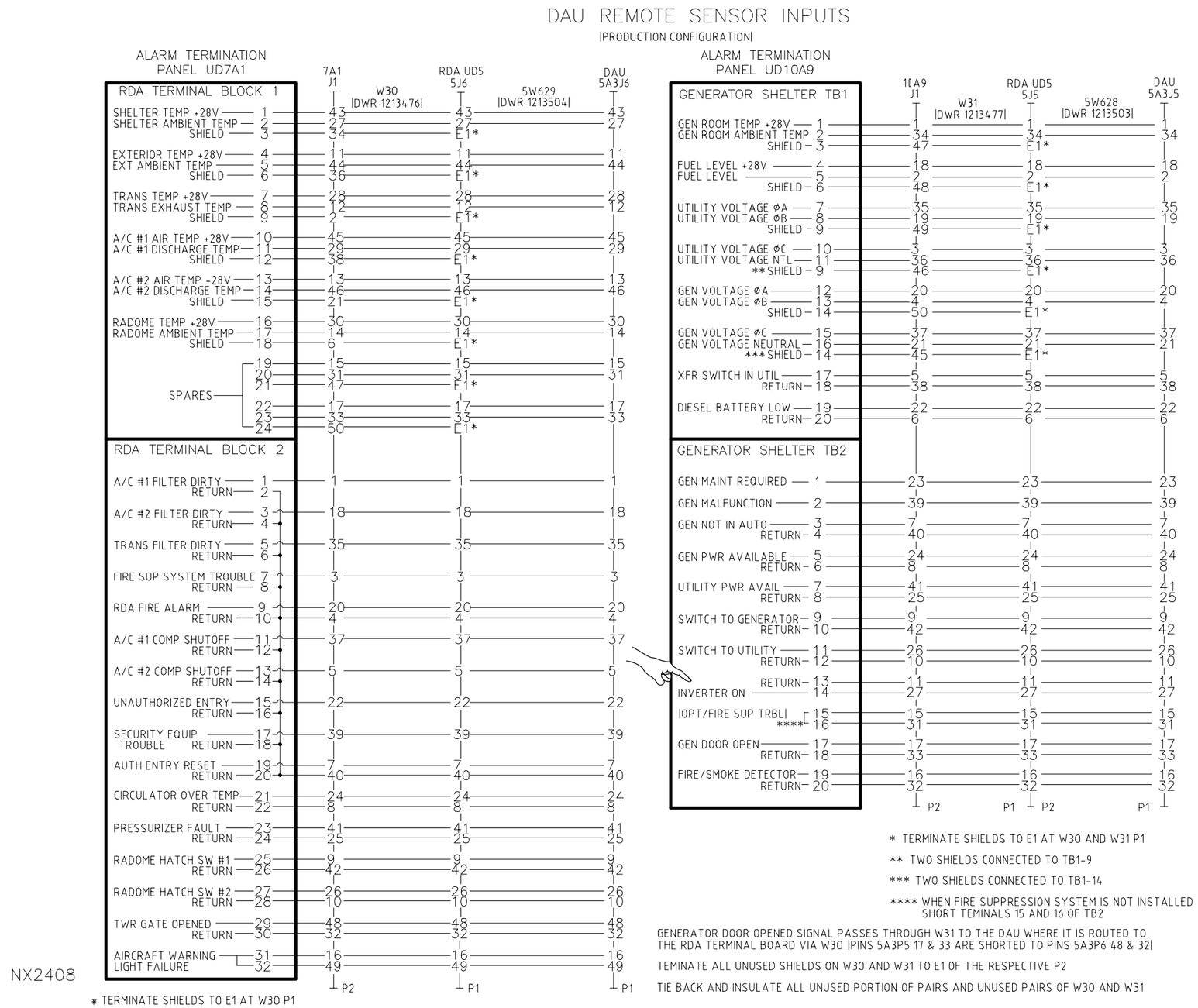

Figure FO4-7. RDA Sensor (Onan) Wiring Diagram

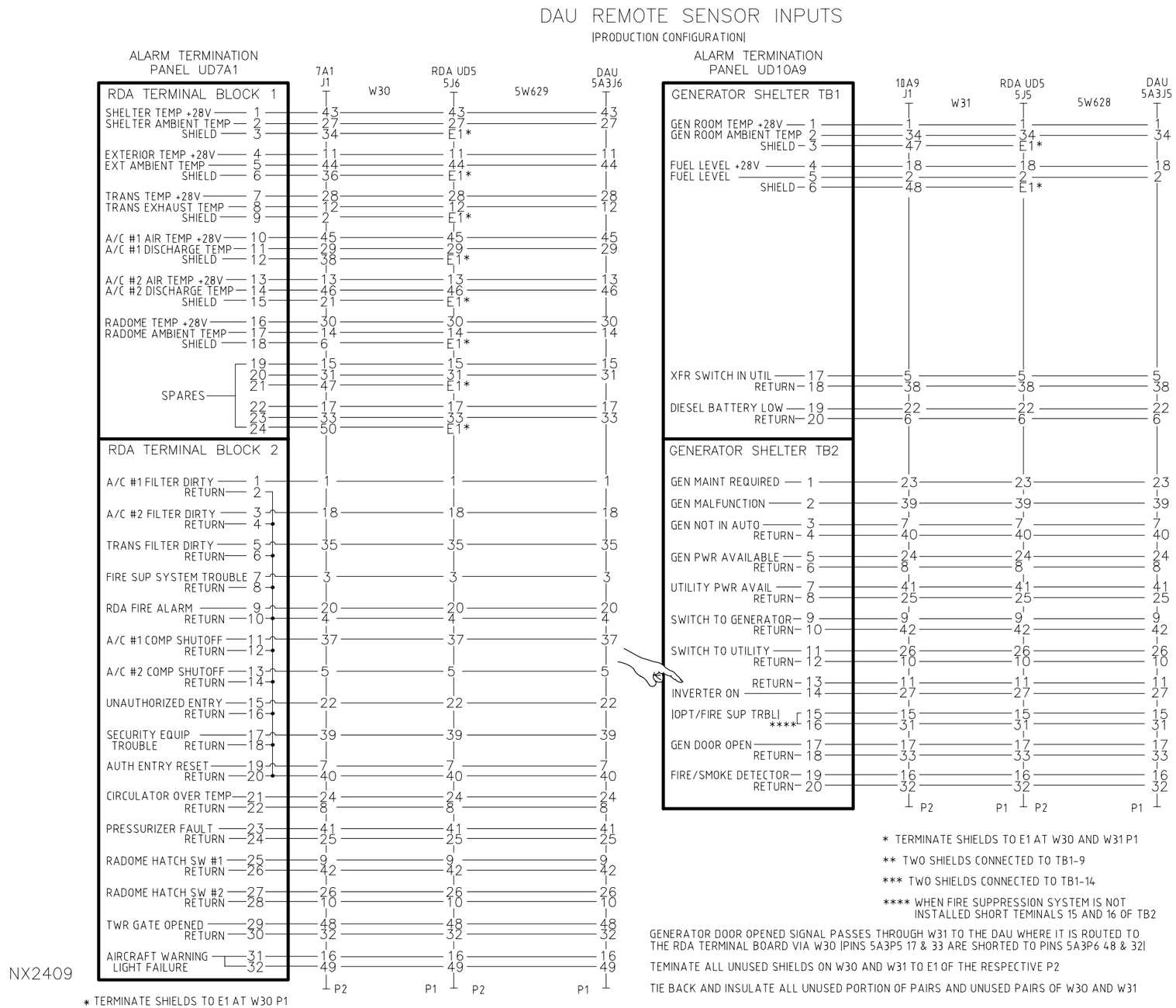

Figure FO4-8. RDA Sensor (Kohler) Wiring Diagram

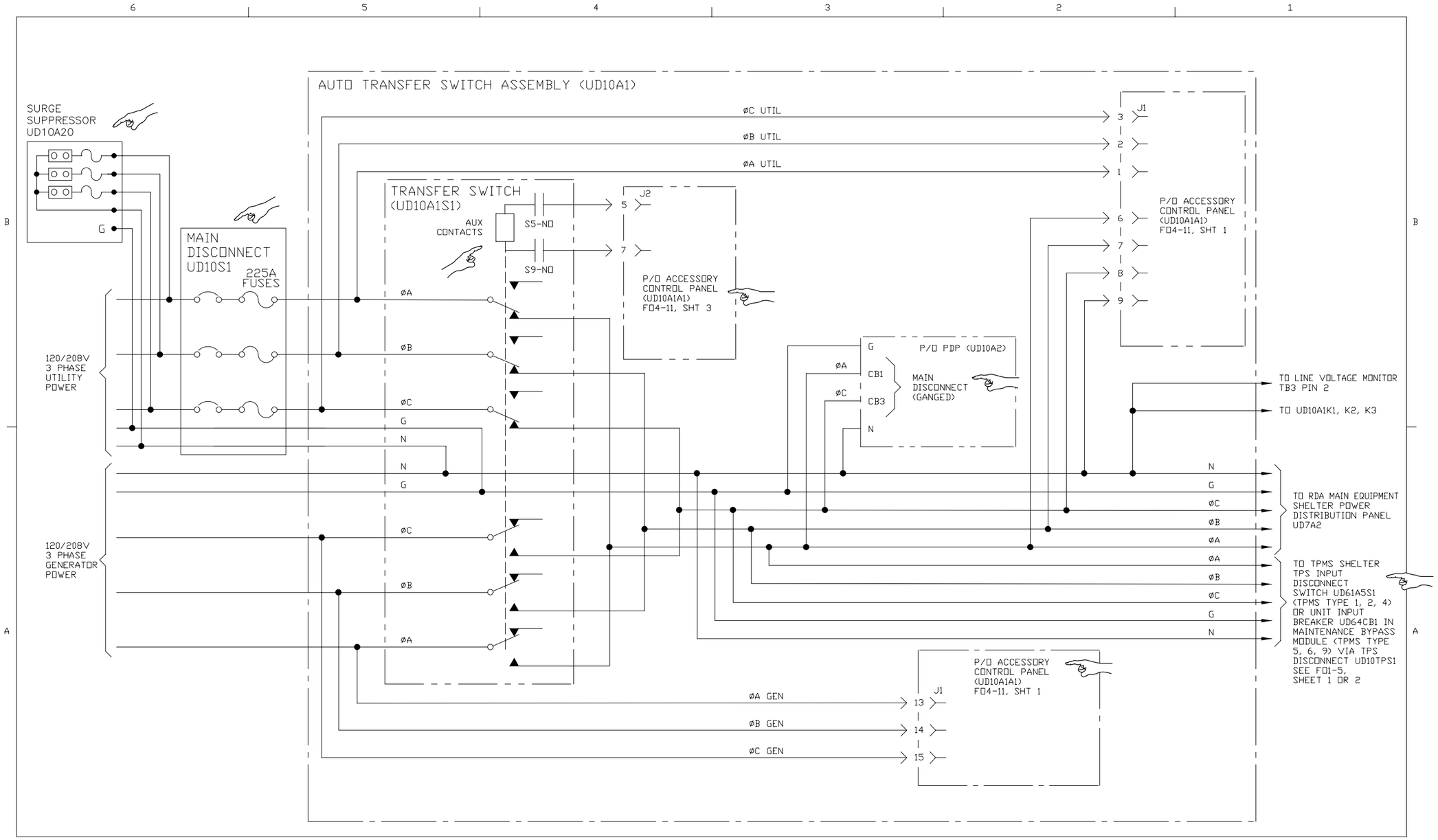

Figure FO4-9. Auto Transfer Switch (Onan Generator and TPMS) AC Power Distribution

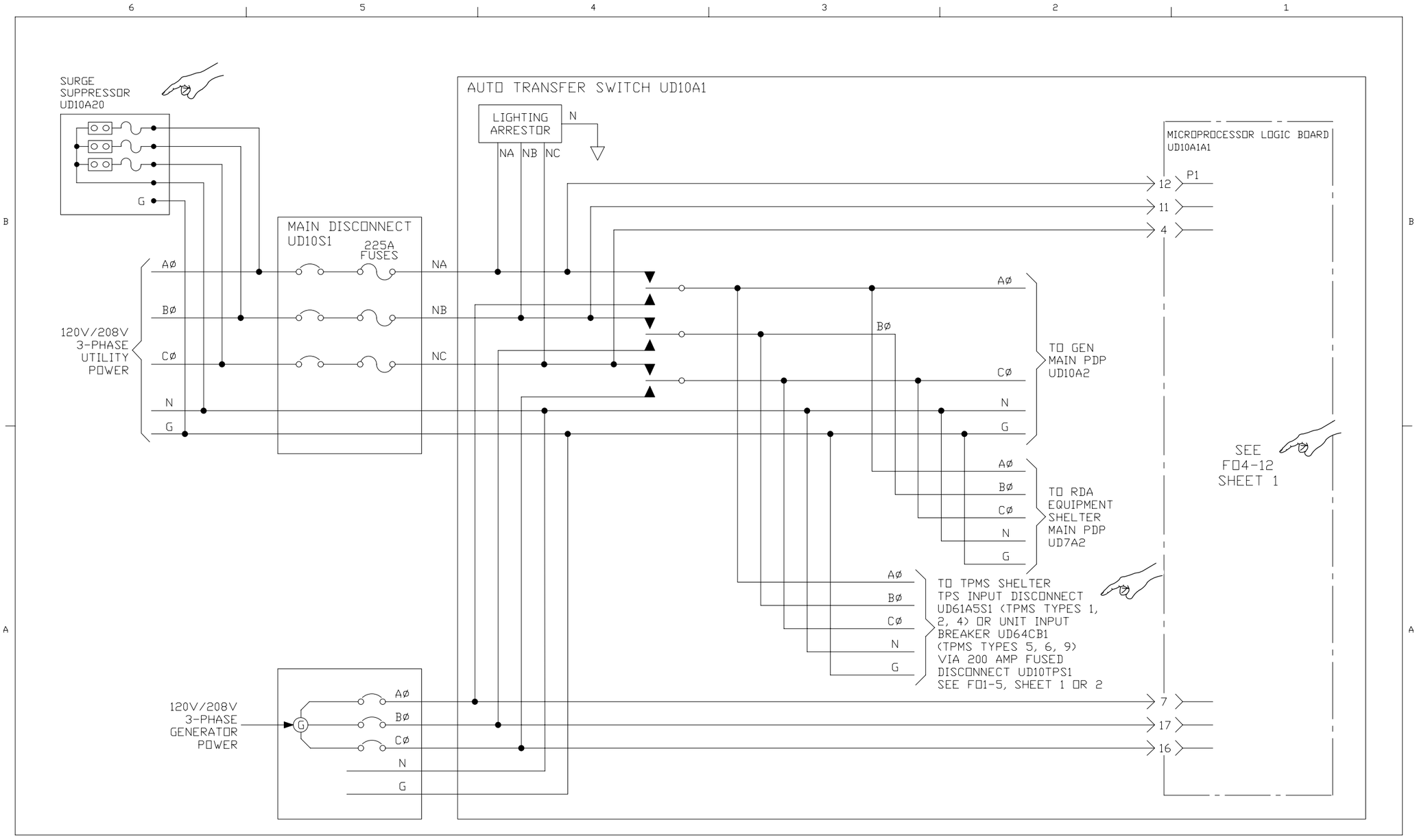

Figure FO4-10. Auto Transfer Switch (Kohler Generator and TPMS) AC Power Distribution

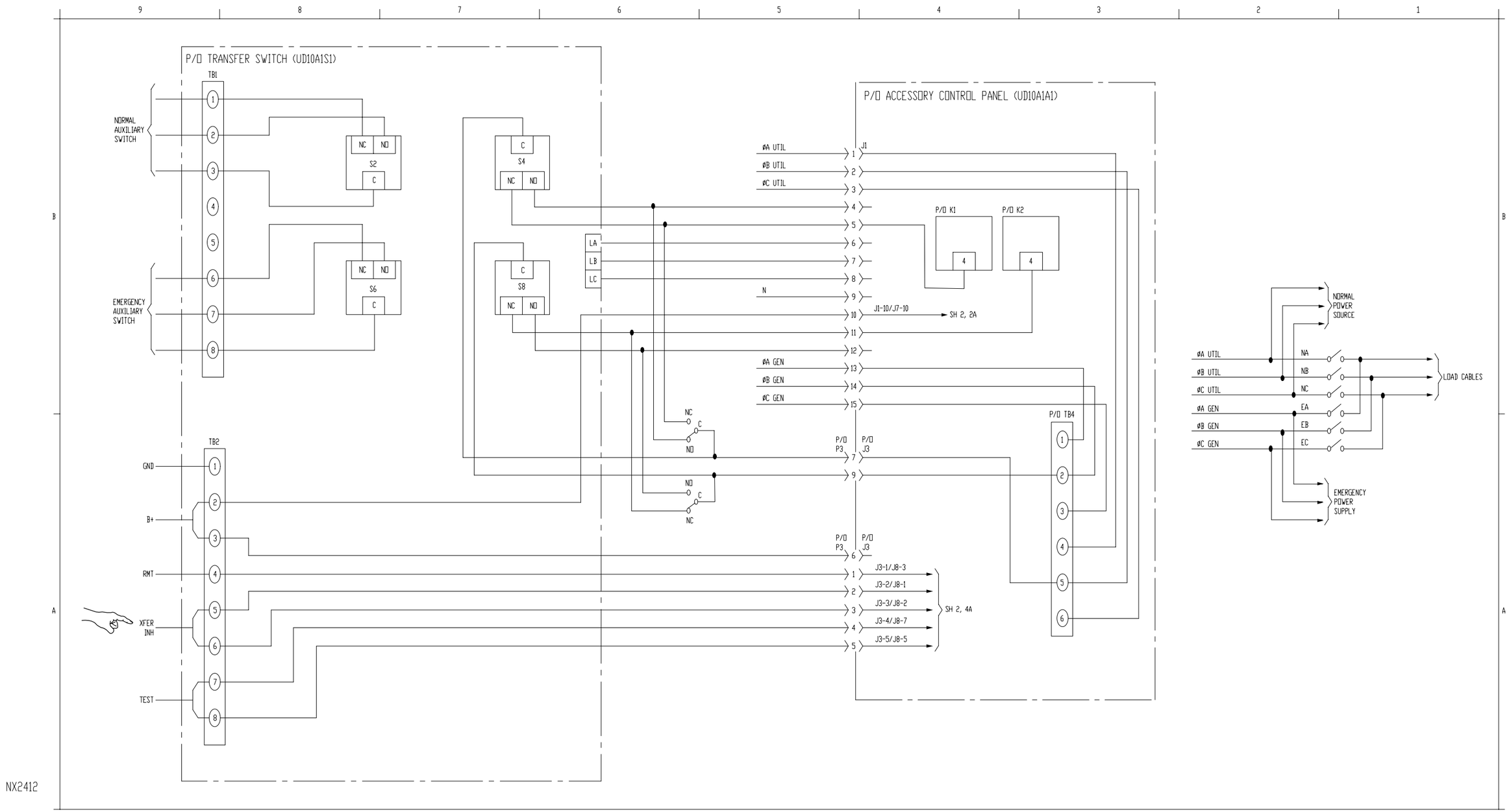

Figure FO4−11. Auto−Transfer Switch (Onan Generator)
Flow Chart (Sheet 1 of 3)

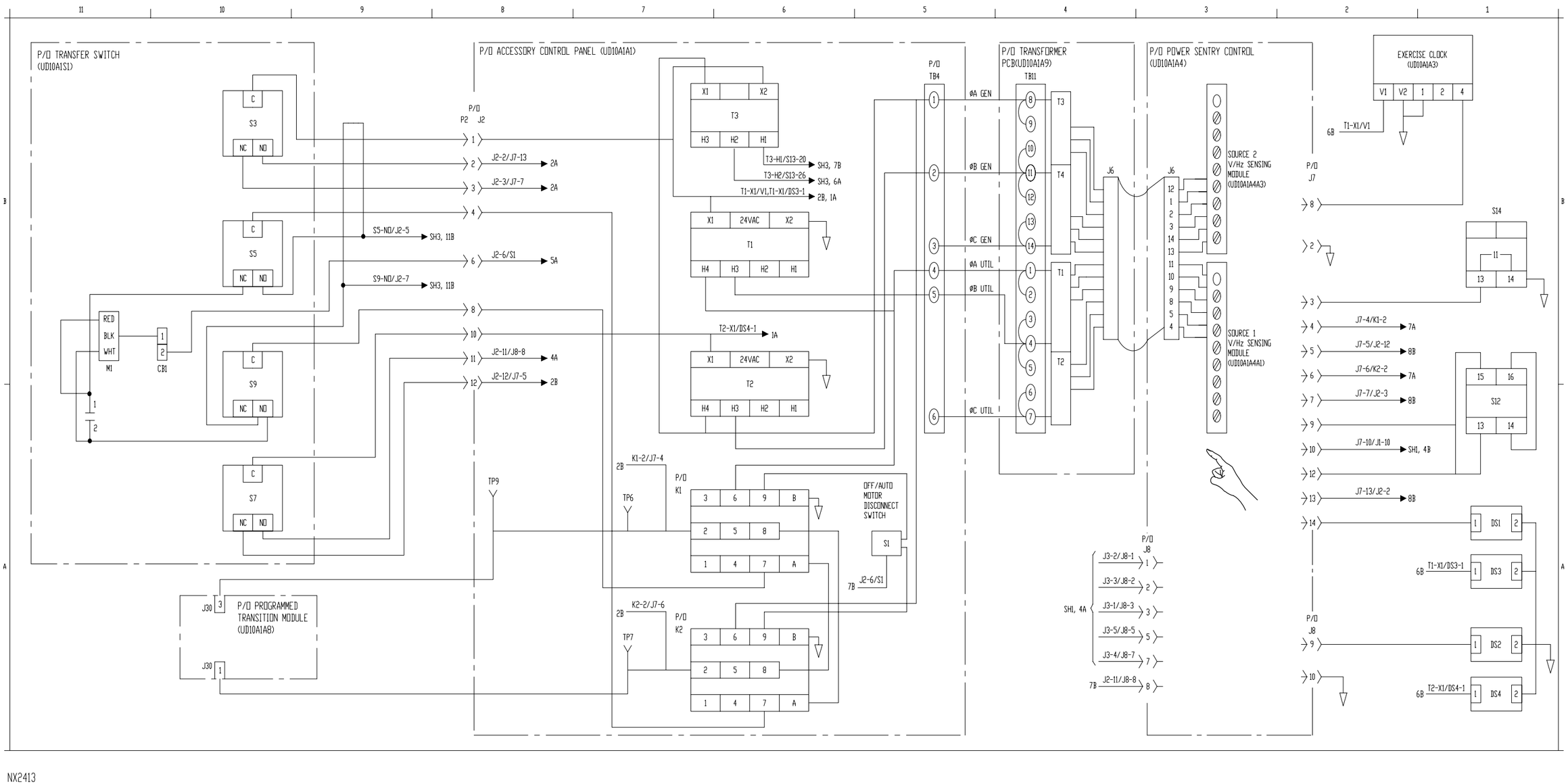

Figure FO4-11. Auto-Transfer Switch (Onan Generator) Flow Chart (Sheet 2 of 3)

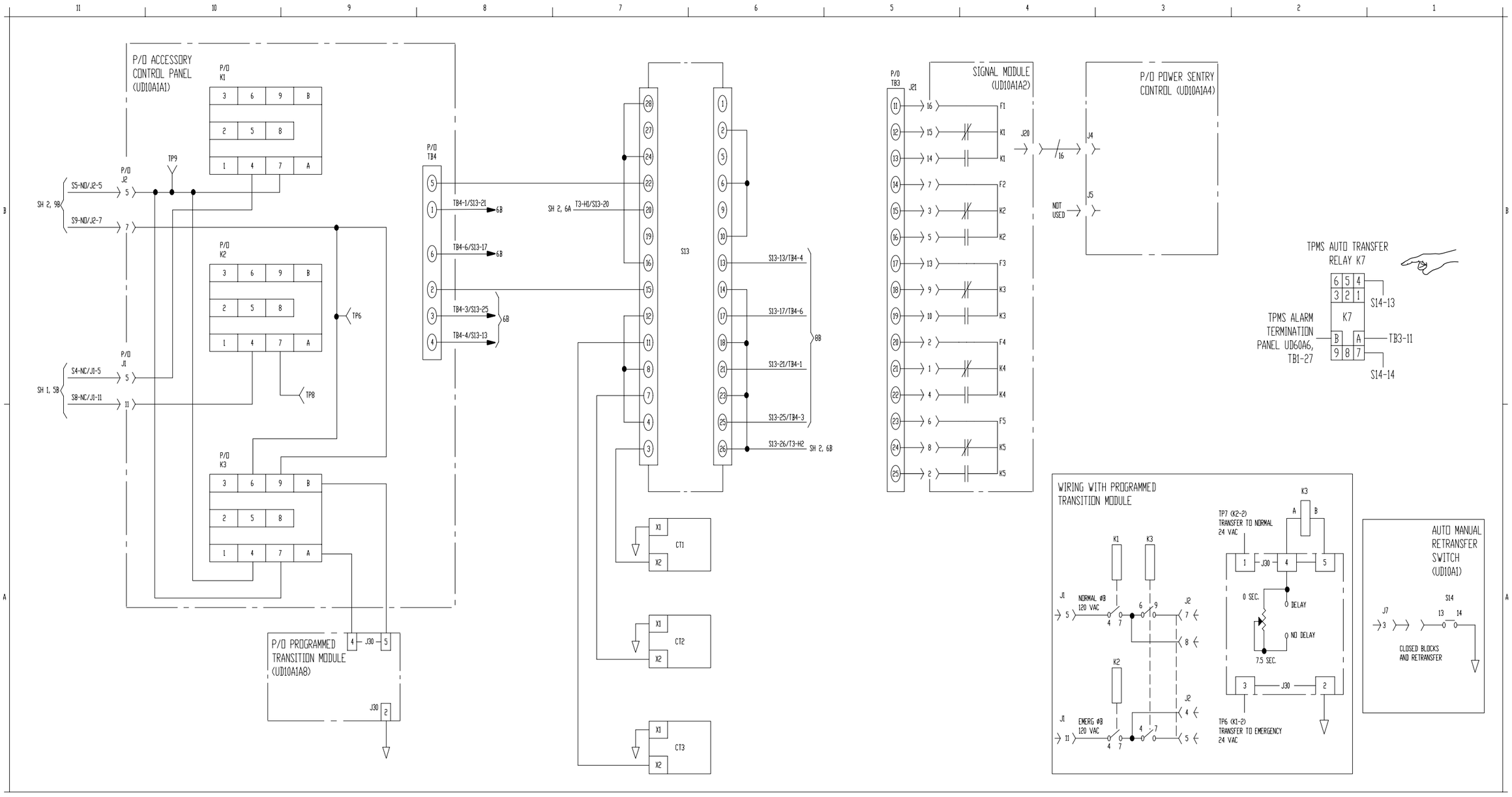

Figure FO4-11. Auto-Transfer Switch (Onan Generator) Flow Chart (Sheet 3 of 3)

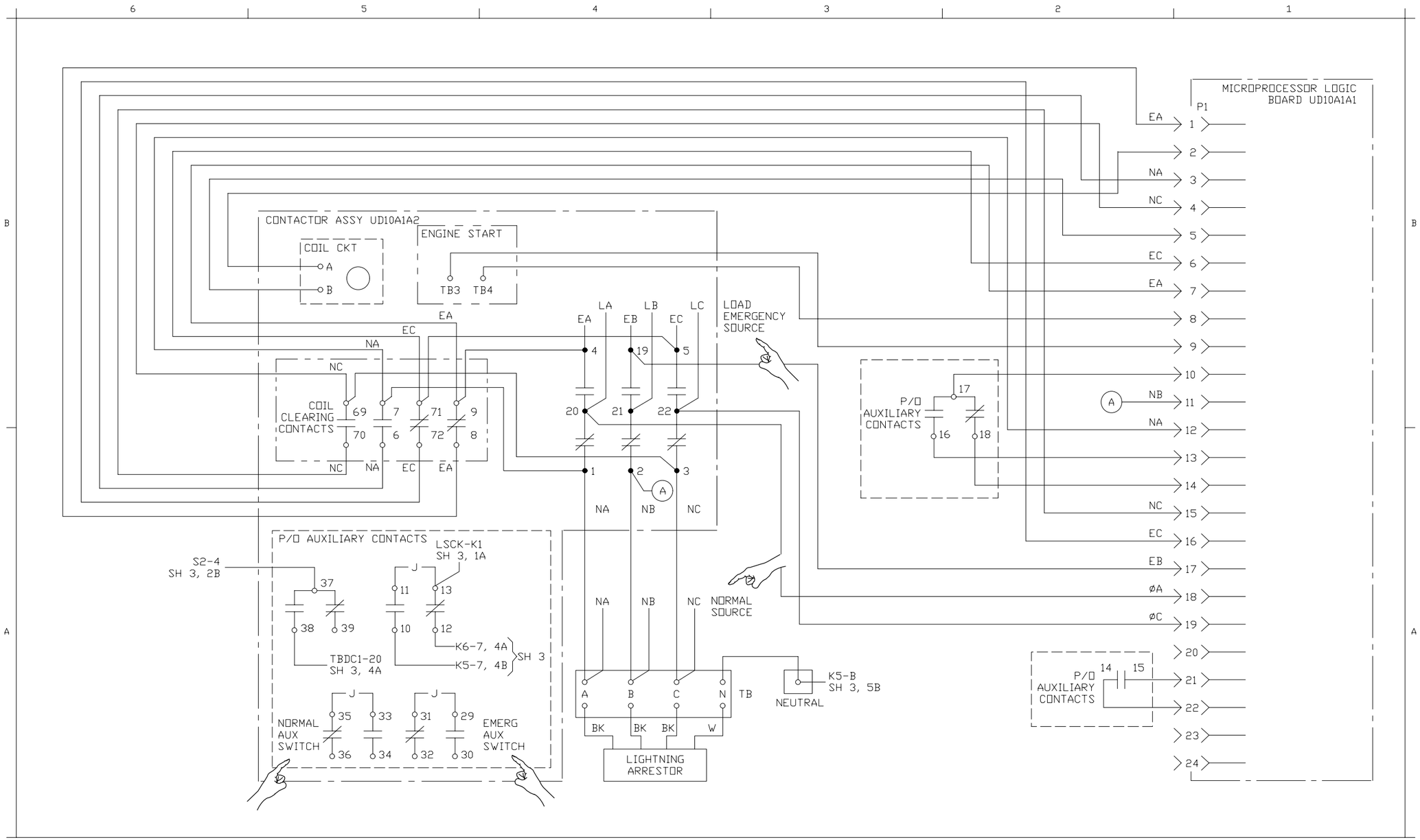

NX2415

Figure FO4−12. Auto−Transfer Switch (Kohler Generator) Flow Chart (Sheet 1 of 3)

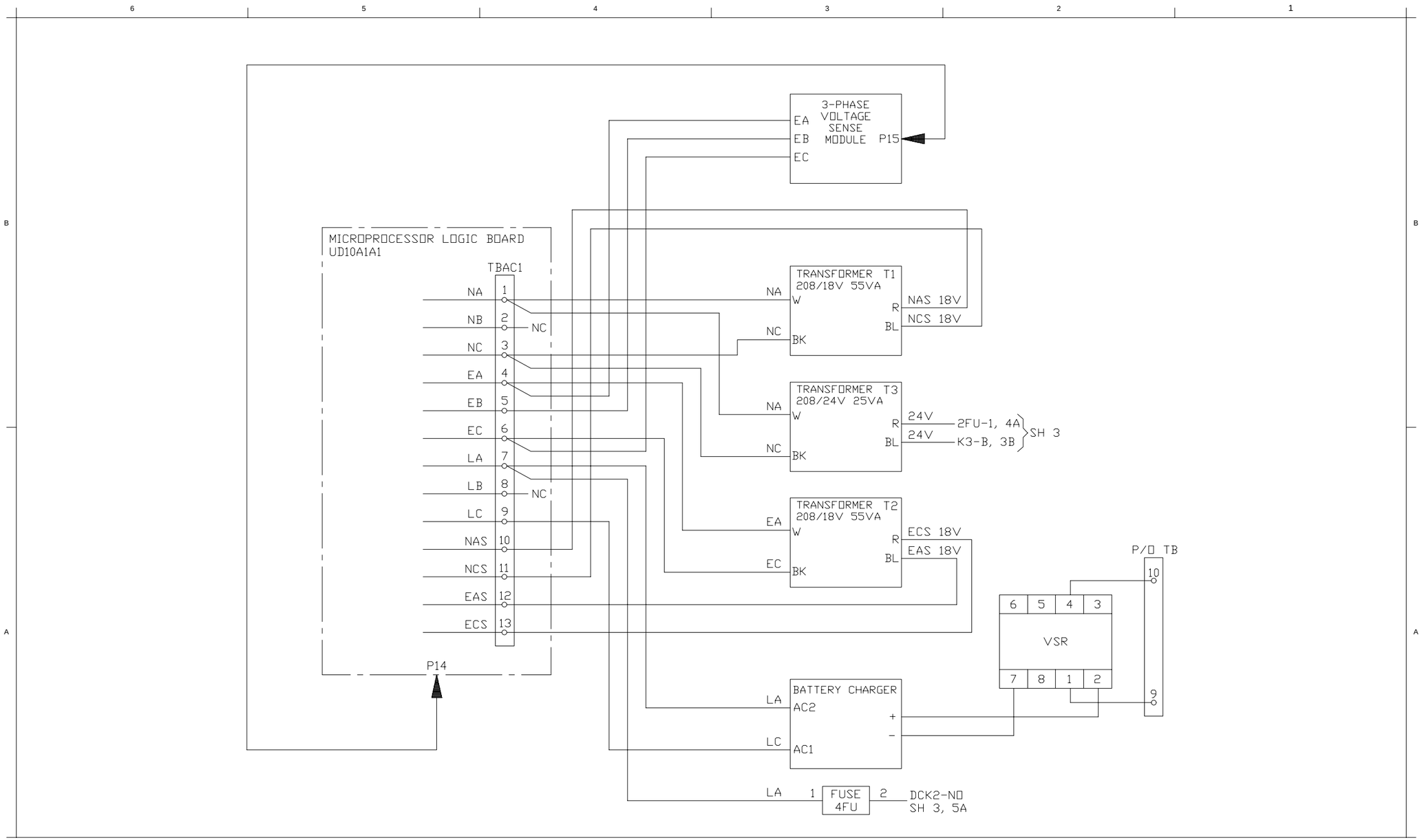

NX2416

Figure FO4−12. Auto−Transfer Switch (Kohler Generator) Flow Chart (Sheet 2 of 3)

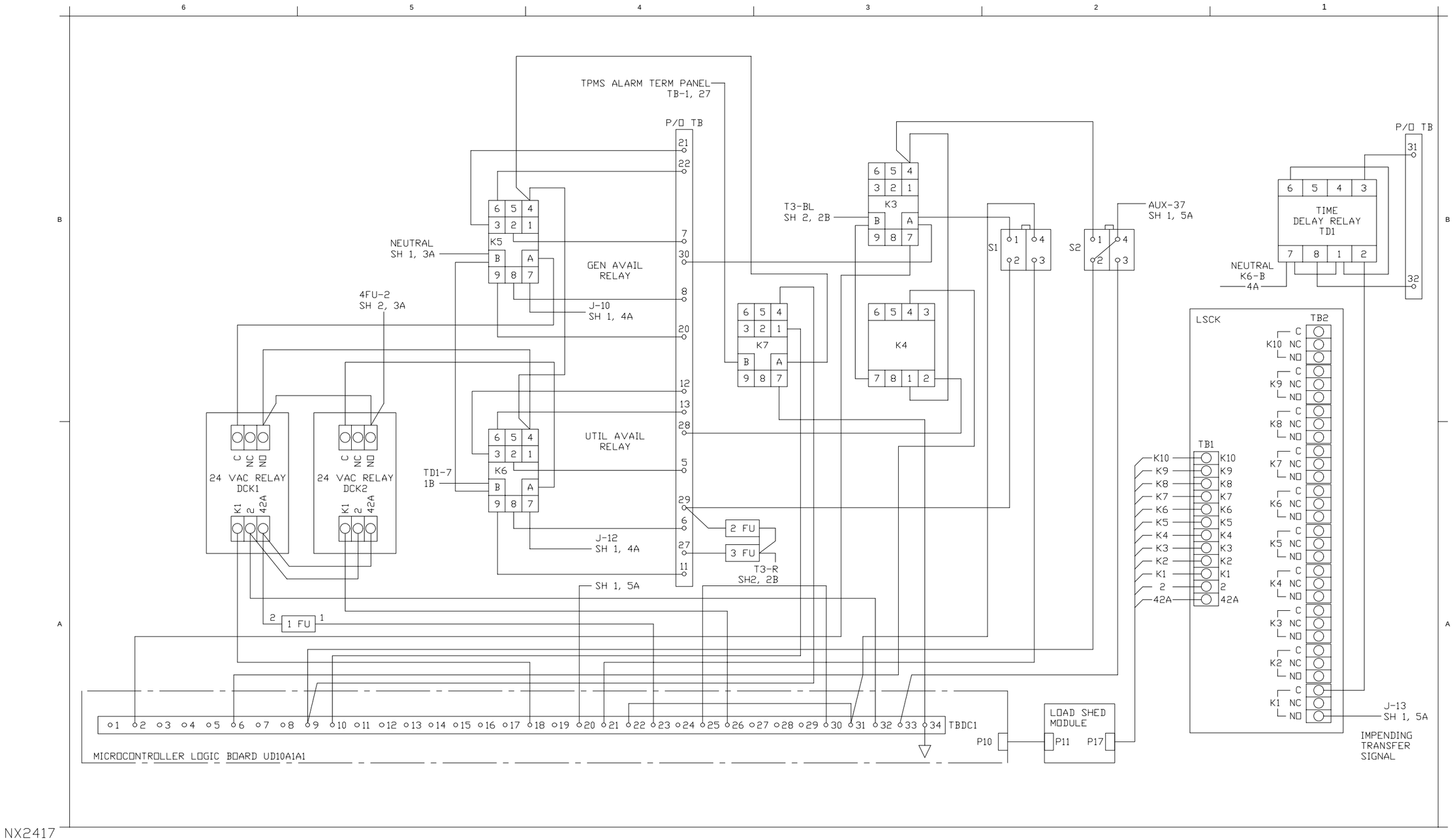

Figure FO4−12. Auto−Transfer Switch (Kohler Generator)
Flow Chart (Sheet 3 of 3)

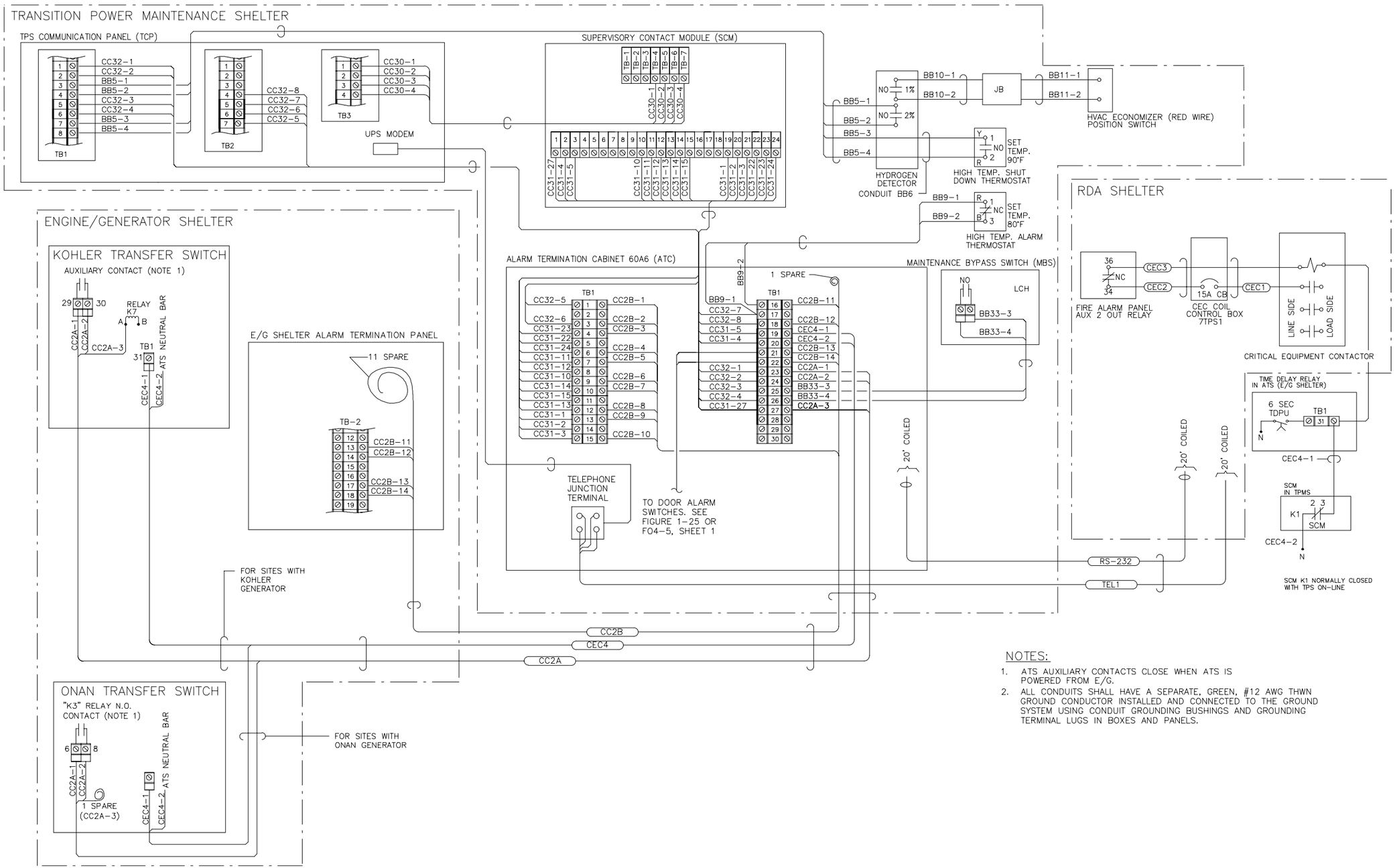

NOTES:

1. ATS AUXILIARY CONTACTS CLOSE WHEN ATS IS POWERED FROM E/G.
2. ALL CONDUITS SHALL HAVE A SEPARATE, GREEN, #12 AWG THWN GROUND CONDUCTOR INSTALLED AND CONNECTED TO THE GROUND SYSTEM USING CONDUIT GROUNDING BUSHINGS AND GROUNDING TERMINAL LUGS IN BOXES AND PANELS.

Figure FO4-13. TPMS Discrete Status Data Monitoring Functional Flow Diagram

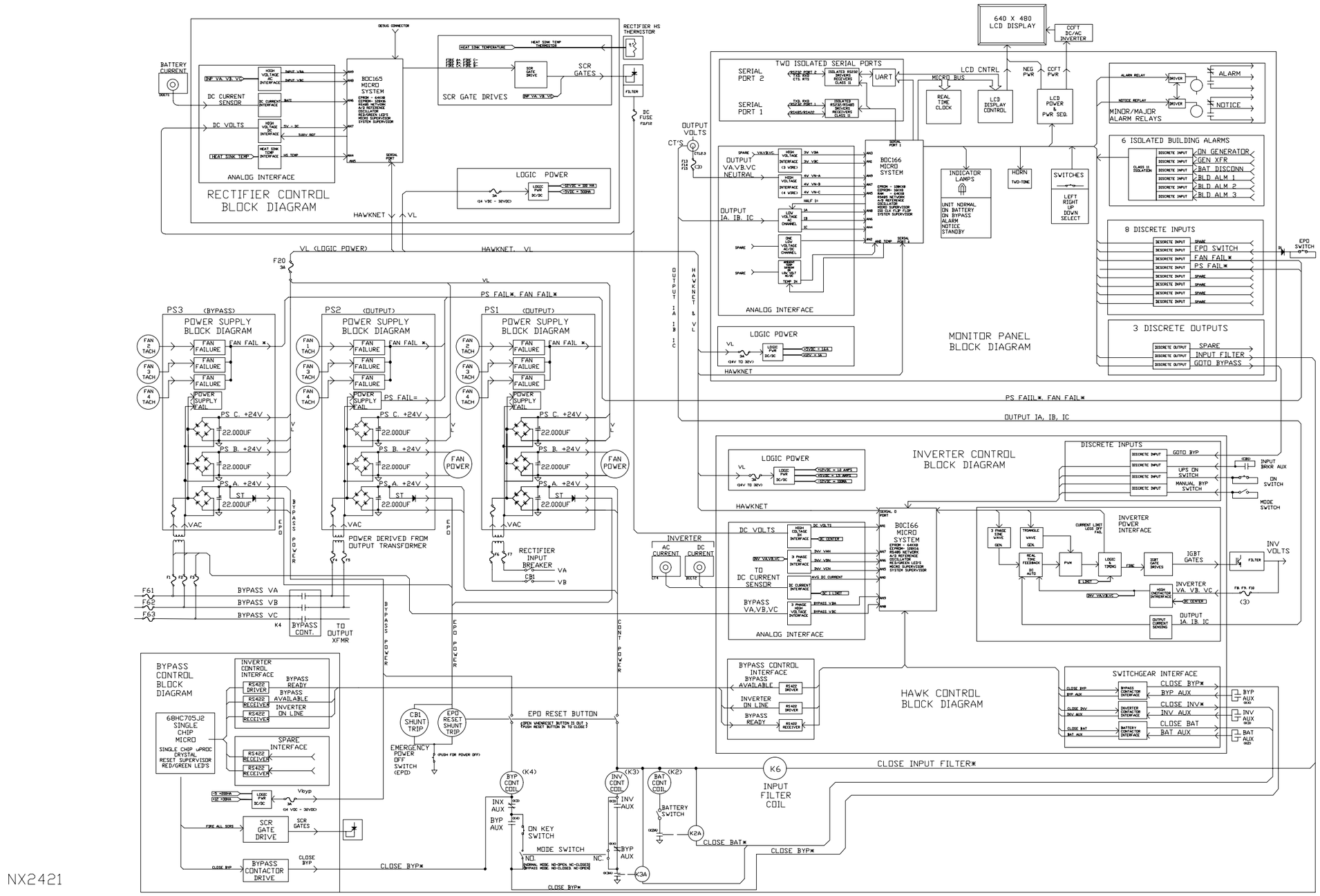

Figure FO4−14. TPS Schematic Diagram, Top Level, Powerware Plus 80 (Sheet 1 of 4)

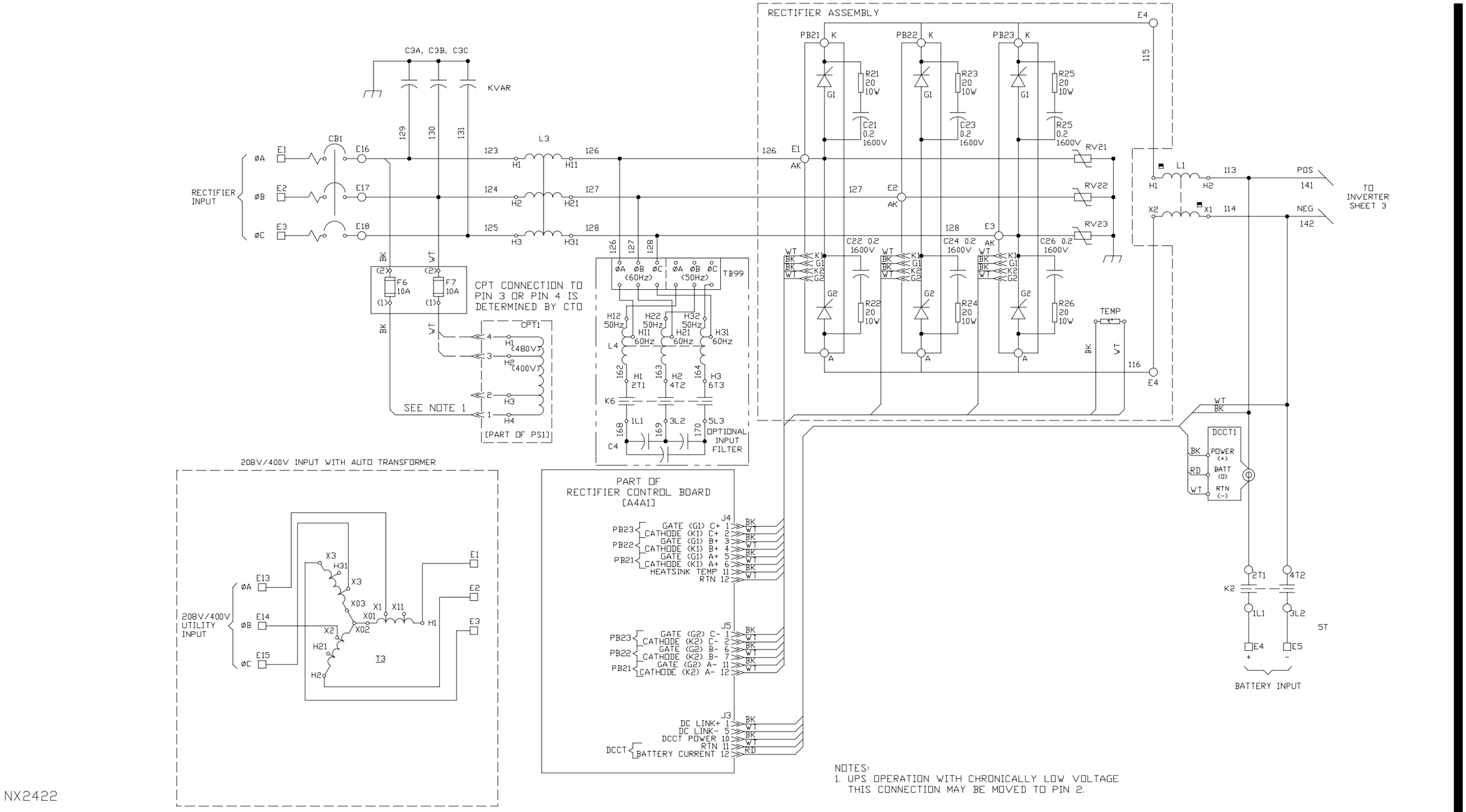

Figure FO4−14. TPS Schematic Diagram, Top Level, Powerware Plus 80 (Sheet 2 of 4)

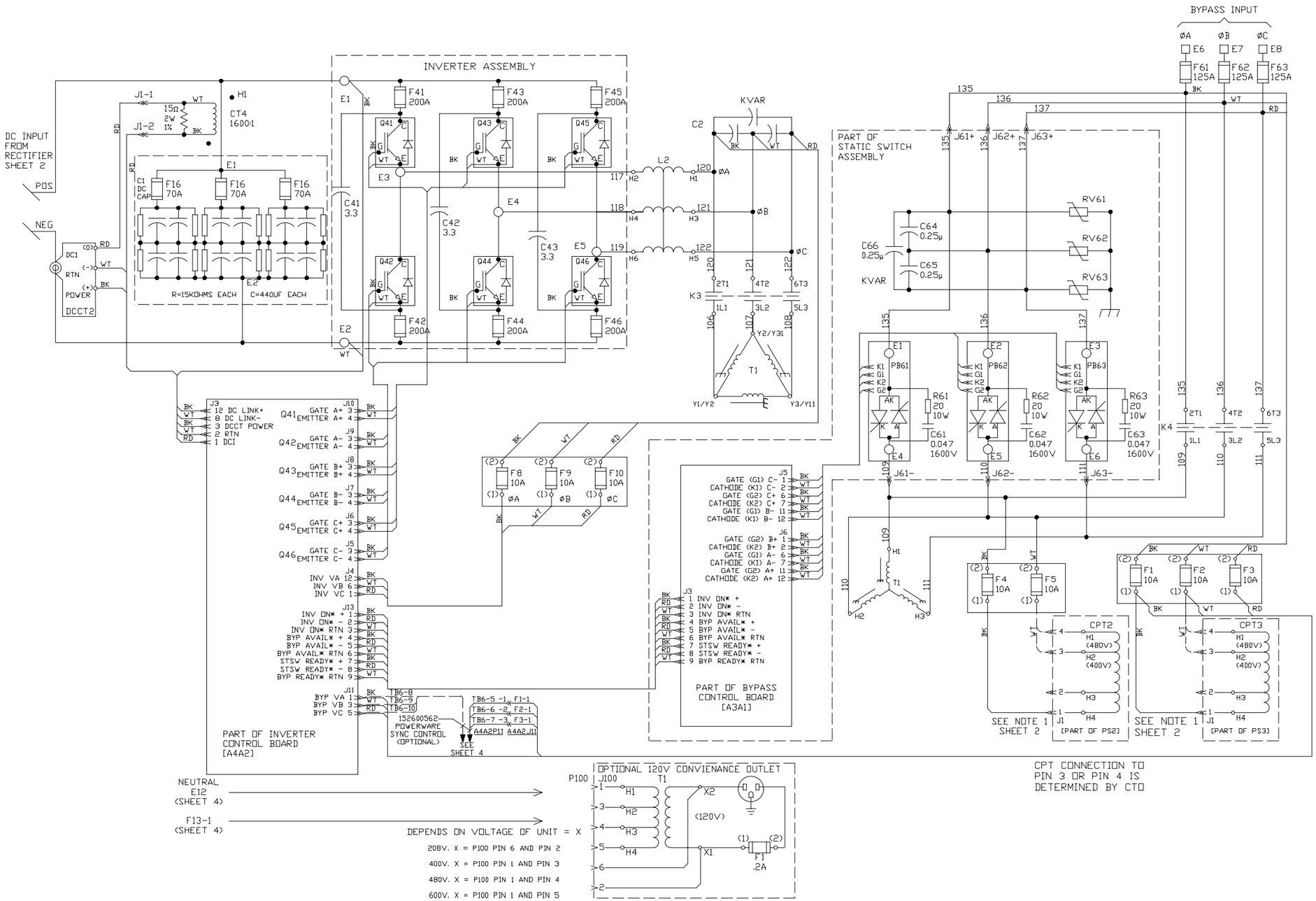

NX2423

Figure FO4−14. TPS Schematic Diagram, Top Level, Powerware Plus 80 (Sheet 3 of 4)

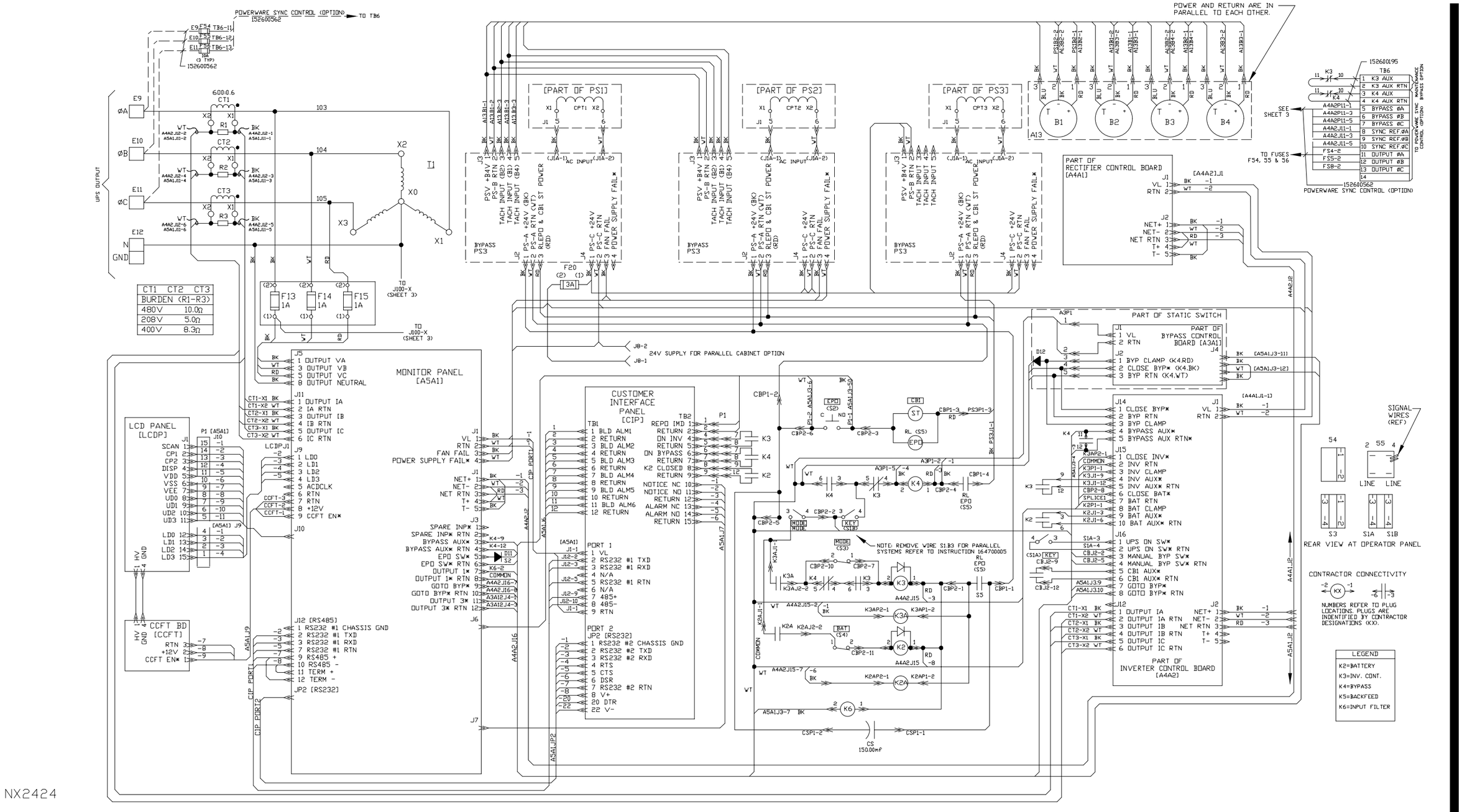

Figure FO4-14. TPS Schematic Diagram, Top Level, Powerware Plus 80 (Sheet 4 of 4)

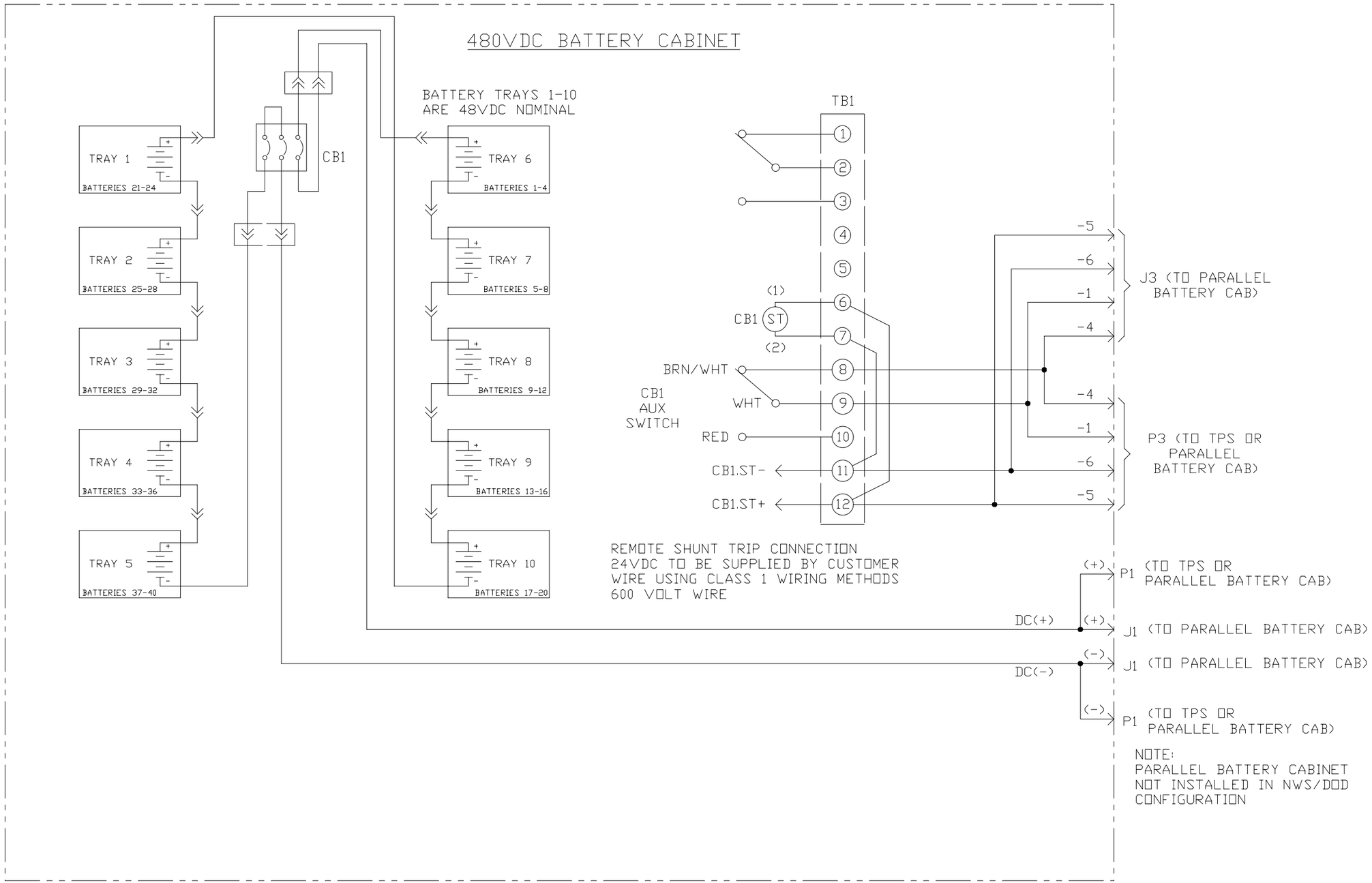

Figure FO4-15. TPS Schematic Diagram, Battery Cabinet, 685/1085

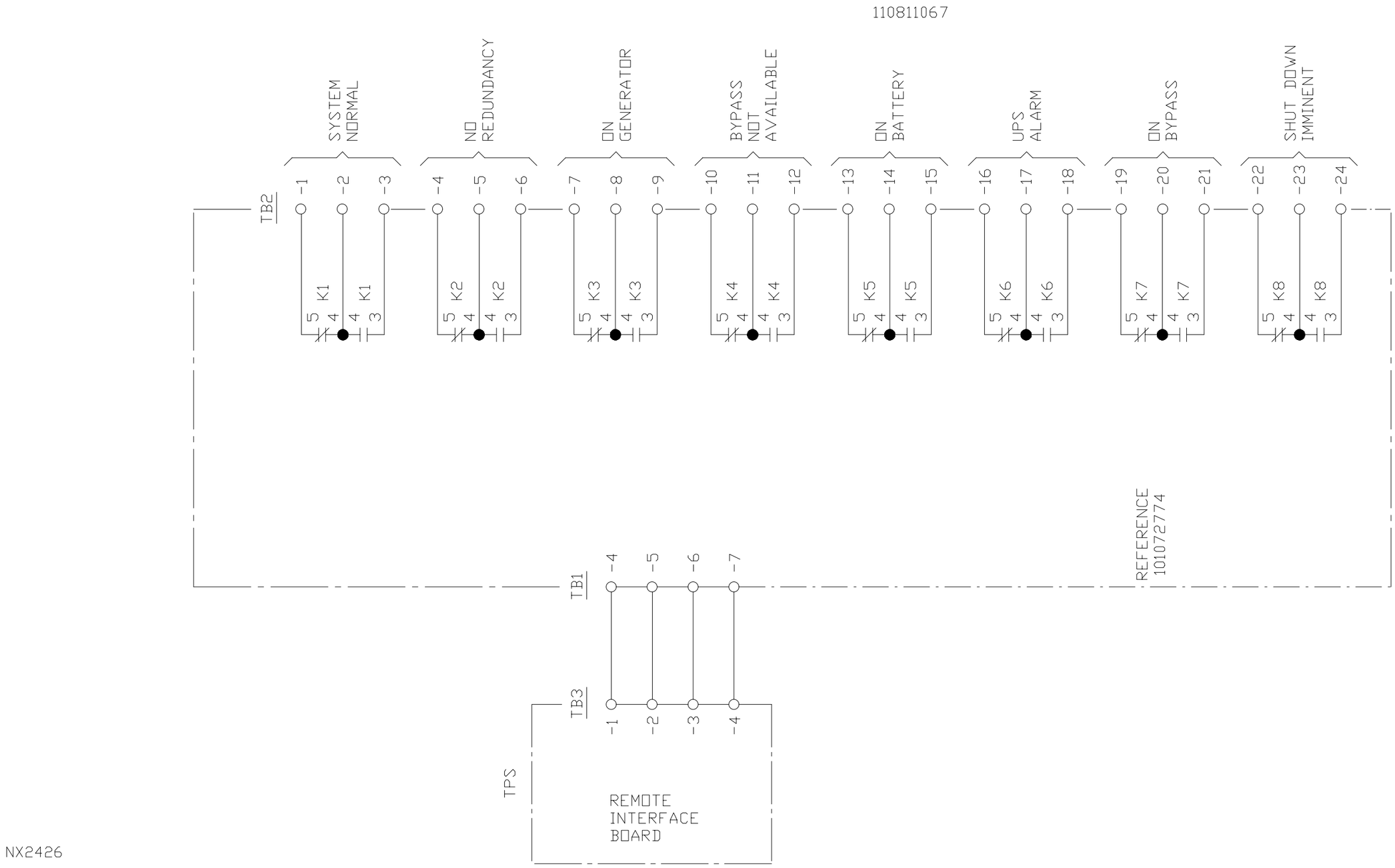

Figure FO4−16. TPS Schematic Diagram, Supervisory Contact Board, (Customer Connections)

APPENDIX A

MICRO JUNIOR CONTROL PANEL FIRE SUPPRESSION DATA

A−1. GENERAL INFORMATION

A−1.1 GENERAL DESCRIPTION.

This appendix provides Fire Suppression Data for the Micro Junior Control Panel.

A−1.2 FIRE DETECTION SYSTEM − PERFORMANCE CHECK.

This procedure requires two technicians.

A−1.2.1 Equipment and Tools Required.

1. Aerosol can of smoke
2. 24 Vdc indicator light with insulated clip test leads
3. Flashlight
4. Lead Markers
5. Screwdriver set, small flat−tip

A−1.2.2 Initial Conditions/Preliminary Setup.

1. At RDA Main Power Distribution Panel UD7A2, ensure the following circuit breakers are set as follows:
   a. 200A service Circuit Breaker (CB) to **ON**
   b. CB30 (Shunt Trip breaker) to **ON**
2. At the RDA Secondary PDP UD7A3, ensure CB13, Fire Suppression/Detection System, is **ON**.
3. Perform the applicable RDA, RPG, and RBDDS equipment shutdown procedure per paragraph 3−5.4.
4. Unlock door on Fire Control Panel UD7A5 and set controls on the printed circuit board (PCB) A1 as follows:
   a. DIP switches 3 through 8 to **OFF**
   b. DIP switches 1 and 2 to **ON**
   c. Press **MASTER RESET** button.

A−1.2.3 Preventive Maintenance Procedures.

1. Verify the following:

   - Fire control panel green LED is lit.
   - Fire control panel red and yellow LEDs are not lit.
   - The Halon cylinder should have been removed from the RDA shelter by Modification Note 55/USAF TCTO 31P1−4−108−584.

CAUTION

The Halon cylinder should have been removed from the RDA shelter by Modification Note 55 (NWS)/TCTO 31P1−4−108−584 (DoD). The fire control panel should no longer be connected to the pressurized cylinder through the electrically controlled solenoid actuator valve. If the Halon cylinder has not been removed, ensure the above Modification Note or TCTO has been accomplished.

NOTE

The status of the fire suppression system is monitored by the WSR−88D on−line BITE. Always notify cognizant site/facility personnel of test and inspection activities to prevent false reports due to RDA alarm.

CAUTION

The master shunt trip circuit breaker in the RDA Main PDP is tripped off during the execution of this test and all lights go out. Failure to perform the RDA equipment shutdown procedure could result in damage to equipment which is not de−energized.

2. Remove power from the Fire Control Panel UD7A5. At the RDA Secondary PDP UD7A3, set CB13, Fire Suppression/Detection System, to **OFF**.

   a. At the Fire Control Panel, verify that the yellow LED flashes after approximately 45 seconds and that the green LED is not lit.

3. At fire control panel, do the following:

   a. Disconnect positive (+) and negative (−) leads from internal battery. Verify that yellow LED is not lit.

   b. Disconnect the 68 ohm resistor from terminals TB1−23 and TB1−24 on PCB A1.

   c. Connect leads on 24 Vdc indicator light to terminals TB1−23 and TB1−24 on PCB.

d. Connect positive (+) and negative (−) leads removed in step 3a to internal battery.

4. Restore power to the Fire Control Panel UD7A5. At the RDA Secondary PDP UD7A3, set CB13, Fire Suppression/Detection System, to **ON**.

CAUTION

Fire Detection Subsystem alarm will sound during this test. Ear protection is required.

NOTE

Shelter lighting will go out during this step. A flashlight is required.

5. Set Manual Discharge switch UD7A6 to **ON** (momentary switch) and verify that each of the following events occur simultaneously upon closure of Manual Discharge switch.

   - The RDA Main PDP 200A circuit breaker trips.
   - Vibration alarm horn UD7A4 sounds.
   - Exterior Fire Detection Subsystem strobe light UD7DS1 flashes.
   - 24 Vdc indicator light connected to terminals TB1−23 and TB1−24 is lit.
   - Fire control panel red LED emits seven flashes.
   - Fire control panel buzzer sounds seven times.

6. After observing indications in step 5, press the fire control panel **MASTER RESET** button and verify that all alarm indications stop and system returns to normal status.

7. At RDA Main PDP, place the 200A Service Main CB to **ON**.

8. Verify that LED on Ion Smoke Detector UD7A23, blinks at a slow rate.

9. Using an aerosol can of smoke, direct a smoke stream directly at Smoke Detector UD7A23. Verify that the following events occur simultaneously:

   - Smoke detector UD7A23 LED is lit steady.
   - The RDA Main PDP Min 200A circuit breaker trips.
   - Vibration alarm horn sounds.
   - Exterior Fire Detection Subsystem strobe light flashes.
   - Pre−discharge timer begins countdown. At end of countdown, the 24 Vdc indicator light connected to PCB is illuminated.

- Fire control panel red LED emits four flashes.
- Fire control panel buzzer sounds four times.

10. After observing indications in step 9, press the fire control panel **MASTER RESET** button and verify that all alarm indications stop and system returns to normal status.
11. At RDA Main PDP, place the 200A Main CB to **ON**.
12. Repeat steps 9 through 11 with the Photoelectric Smoke Detector UD7A17.
13. Perform steps 1 and 2.
14. Verify that the LEDs on Smoke Detectors UD7A17 and UD7A23 are extinguished.
15. Direct a stream of smoke from aerosol can directly at either of the two smoke detectors and observe that the following events occur simultaneously:
    - Smoke detector LED lights.
    - Vibration alarm horn sounds.
    - Exterior Fire Detection Subsystem strobe light flashes.
    - Pre−discharge timer on fire control panel starts countdown.

NOTE

To perform this test properly, the Manual Abort switch UD7A7 must be switched to the **ON** position before the 24 Vdc indicator light connected to PCB A1 lights.

16. Hold Manual Abort switch UD7A7 in **ON** position for approximately 60 seconds and then release switch. Observe that 24 Vdc indicator light connected to PCB A1 does not light while switch is in the **ON** position.
17. Verify that alarm indications resume 45 seconds after Manual Abort switch is released.
18. Press fire control panel **MASTER RESET** button.
19. At RDA Main PDP, ensure that CB30 is **OFF** and 200A Service Main CB is **ON**.
20. At fire control panel, do the following:
    a. Set DIP switches 3, 4, 6, 7 and 8 to **OFF**.
    b. Set DIP switches 1, 2, and 5 to **ON**.
    c. Press **MASTER RESET** button.
21. Perform the applicable RDA, RPG, and RBDDS equipment startup procedures per paragraph 3−5.5.

22. Using the aerosol can of smoke, direct a smoke stream at Smoke Detector UD7A23.

23. Observe Fire Detection Subsystem fault message appears on RDA Maintenance Terminal monitor.

24. Press fire control panel **MASTER RESET** button and verify Fire Detection Subsystem fault message disappears from RDA maintenance terminal monitor.

25. Using the aerosol can of smoke, direct a smoke stream at Smoke Detector UD7A17.

26. Observe Fire Detection Subsystem fault message appears on RDA Maintenance Terminal monitor.

27. Press fire control panel **MASTER RESET** button and verify Fire Detection Subsystem fault message disappears from RDA Maintenance Terminal monitor.

28. Perform the applicable RDA, RPG, and RBDDS equipment shutdown procedures per paragraph 3−5.4.

29. Using the aerosol can of smoke, direct a smoke stream at both smoke detectors.

30. Verify that each of the following events occur simultaneously:

    - The smoke detectors LEDs are lit steady
    - Vibration alarm horn sounds.
    - Exterior Fire Detection Subsystem strobe light flashes.
    - Pre−discharge timer begins countdown. At end of countdown, the 24 Vdc indicator light connected to PCB A1 lights.
    - Fire control panel red LED emits four flashes.
    - Fire control panel buzzer sounds four times.

31. Press fire control panel **MASTER RESET** button.

32. At RDA Main PDP, ensure that the 200A Service Main CB is **ON**.

33. Remove power from the Fire Control Panel UD7A5. At the RDA Secondary PDP UD7A3, set CB13, Fire Suppression/Detection System, to **OFF**.

34. At fire control panel, do the following:

    a. Disconnect positive (red) and negative (black) leads from internal battery.

    b. Disconnect leads on 24 Vdc indicator light from terminals TB1−23 and TB1−24 on PCB.

    c. Connect the 68 ohm resistor to terminals TB1−23 and TB1−24 on PCB.

d. Connect positive (red) and negative (black) leads to internal battery.

35. At RDA Main PDP, set the 200A service Main CB to **ON**.

36. Restore power to the Fire Control Panel UD7A5. At the RDA Secondary PDP UD7A3, set CB13, Fire Suppression/Detection System, to **ON**.

A−1.3 BATTERY UD7A5BT1, BT2 − PERFORM BATTERY LOAD TEST.

This procedure requires two technicians.

A−1.3.1 Equipment and Tools Required.

1. Multimeter, digital (Fluke 8060A or equivalent).

A−1.3.2 Initial Conditions/Preliminary Setup.

1. Apply power to Micro Junior Control Panel. (Refer to Table A−1.)

A−1.3.3 Preventive Maintenance Procedures.

NOTE

To obtain accurate results, the Fire Detection Subsystem control panel must be operating on AC power for at least 24 hours prior to test.

1. At Fire Detection Subsystem Control Panel UD7A5, disconnect the positive (red) and negative (black) leads from the internal battery.

2. Observe the yellow LED indicator on the Fire Detection Subsystem Control Panel PCB, UD7A5A1, emits three flashes and the buzzer sounds three times.

3. Using the multimeter, measure and record the battery voltage (it should read approximately 24 Vdc).

4. Reconnect the positive (red) and negative (black) battery leads and press the **RESET** button. Observe all alarm indications stop and status returns to normal state.

5. Remove power from the Fire Control Panel UD7A5. At the RDA Secondary PDP, set CB13, Fire Suppression/Detection System circuit breaker, to **OFF**.

6. At Fire Detection Subsystem Control Panel UD7A5, observe green LED is extinguished. The yellow LED flashes and the buzzer sounds in approximately 45 seconds.

7. Using the Multimeter, measure and record the battery voltage. The measured value should be slightly less than the value measured in step 3.

8. Wait five minutes and remeasure the battery voltage. The battery voltage should not decrease by more than 10% (min. value 21.5 Vdc) of the value measured in step 7. If the voltage difference is more than 10%, the battery should be replaced.

9. Restore power to the Fire Control Panel UD7A5. At the RDA Secondary PDP UD7A3, set CB13, Fire Suppression/Detection System, to **ON**.

10. At Fire Detection Subsystem Control Panel UD7A5, press the **RESET** button. Observe the green LED lights, the yellow LED is extinguished, and the buzzer stops sounding.

Table A−1. Fire Detection Subsystem Power−Up Procedures
(for Micro Junior Control Panel)

Step	Equipment	Action	Indication Reference
1	Micro Junior Control Panel Assembly UD7A5	Use key and remove Micro Junior Control Panel cover	Observe the Micro Junior Printed Circuit Board (PCB).
2	Micro Junior PCB UD7A5A1	Set programmable DIP switches as follows: ON OFF 8 7 6 5 4 3 2 1	
3	Micro Junior PCB UD7A5A1	Momentarily press **RESET** switch	
4	Micro Junior Control Panel cover	Replace and secure control panel cover	

A−1.4 PRINTED CIRCUIT BOARD, MICRO JUNIOR UD7A5A1 REMOVAL/REPLACEMENT.

This procedure requires two technicians.

A−1.4.1 Equipment and Tools Required.

1. Screwdriver set, flat−tip
2. Small crescent wrench
3. Nutdriver set
4. ESD wristband with alligator clip
5. ESD conductive mat with ground clip
6. Multimeter

A−1.4.2 Initial Conditions/Preliminary Setup.

WARNING

The printed circuit board in the Micro Junior Fire Detection System Panel UD7A5 has three inputs of 115 Vac power coming into the panel. It is imperative that each power input be identified and shut off. Failure to remove all power inputs may result in contact with a live electrical circuit and possibly cause severe injury or **DEATH** on contact.

1. Perform the applicable RDA, RPG, and RBDDS equipment shutdown procedures per paragraph 3−5.4.
2. At the Main PDP UD7A2, set the Shunt Trip circuit breaker CB30 to **OFF.**

NOTE

As part of the TPMS installation, the circuit breaker for the Fire Detection Panel should have been moved from the Main PDP CB20 position to the Secondary PDP CB13 position. However, if CB13 was occupied, the electrician may have placed it elsewhere in the Secondary PDP. For configuration control, the breaker should be at CB13.

3. At the Secondary PDP UD7A3, set the Fire Suppression/Detection Panel circuit breaker CB13 to **OFF**.
4. At the Secondary PDP UD7A3, set all other circuit breakers to **OFF**.
5. At the TPS Critical Equipment Contactor (CEC) Coil Control Box UD7TPS1, set the circuit breaker to **OFF**.

NOTE

Setting these circuit breakers to off should remove the three 115 Vac inputs to the Fire Detection Panel UD7A5 printed circuit

board. The audible alarm will beep indicating loss of power until the battery connection is disconnected.

6. At the Fire Detection Panel UD7A5, using the key, open the Micro Junior front panel cover and let it hang down to gain access to the printed circuit board. Use a multimeter to verify there is no line AC voltage within the panel.

A−1.4.3 Removal/Replacement Procedure.

WARNING

Failure to perform the preliminary setup can cause damage to equipment and serious injury or **DEATH**.

ESD **CAUTION** **ESD**

All WSR−88D printed circuit cards are electrostatic sensitive devices which require special handling.

1. Put ESD wristband on and attach alligator clip to cabinet chassis.
2. Remove the two connectors at the top of the Micro Junior PCB card.
3. Using the proper screwdriver, tag and remove all the leads connected to the terminal boards of the Micro Junior PCB card.
4. Make a note of the 8 settings on the dip switch which is located near the middle of the Micro Junior PCB card.
5. Using the proper nutdriver and/or the small crescent wrench, remove and set aside the four holding nuts and plastic washers.
6. Remove and set the Micro Junior PCB card on grounded conductive bag.
7. Using the proper nutdriver and/or the small crescent wrench, install the new Micro Junior PCB card by inserting and tightening the four holding nuts and plastic washers which were set aside in step 5.
8. Change the dip switch settings to match the settings noted in step 4.
9. Using the proper screwdriver, untag and connect the leads to the Micro Junior PCB card terminal boards.
10. Connect the two connectors to the Micro Junior PCB card.
11. Remove the ESD wristband and disconnect alligator clip from chassis.
12. Restore AC power to the Fire Detection Panel by performing the following applicable steps:

a. At the TPS CEC Coil Control Box UD7TPS1, set the circuit breaker to **ON**.

b. At the Secondary PDP, set circuit breaker CB13, then all other circuit breakers to **ON**.

c. At the Main PDP, set Shunt Trip circuit breaker CB30 to **ON**.

13. Momentarily press the **MASTER RESET** switch which is located on the right side of the Micro Junior PCB card.

14. Perform operational check per Table A−2.

15. Place the Micro Junior fire control front panel to its original position.

16. Using the key, lock the Micro Junior fire control front panel.

17. Restore system to normal operation. Perform applicable RDA/RPG/RBDDS equipment startup procedures per paragraph 3−5.5.

Table A−2. RDA Shelter Fire Detection System Circuitry Verification of Operation Check (for Micro Junior Control Panel)

Step	Equipment	Action	Indication Reference
		NOTE Prior to performing this check, ensure that applicable power−up procedures are completed. Refer to Table 2−1, Power Distribution Subsystem Power−Up Procedures, and NWS EHB 6−51.0, paragraph 6−5.3.2, for the RDADP UD5.	
1	Micro Junior Control Panel UD7A5	Observe GREEN AC power LED is illuminated	AC power LED illuminated. If not, refer to Micro Junior Control Panel operating instructions plate for operating instruction, or refer to Figure 3−2, sheet 1.
		NOTE If application menu is displayed, go to step 3.	
2	RDA Maintenance Terminal	When application menu is not displayed, use mouse and click on the applications screen.	Observe Main Menu appears then go to step 3a.
3	RDA Maintenance Terminal	Type **MAIN** on command line and press **<Return>** key.	Main menu is displayed.
		a. Type **DIPD<Tab>TOW** and press **<Return>** key.	a. `Performance Data Tower Utilities Menu #1` appears on monitor.
		b. Check menu using Table 2−7 in Chapter 2	b. `GEN SHELTER OK GEN SH FIRE SYS OK EQUIP SHELTER OK EQUIP SH FIRE SYS OK`

A−1.5 TRANSFORMER, MICRO JUNIOR UD7A5T1 REMOVAL/REPLACEMENT.

This procedure requires two technicians.

A−1.5.1 Equipment and Tools Required.

1. Socket wrench set, 3/8″ drive
2. Wrench, small crescent
3. Heat gun
4. Heat shrink tubing
5. Soldering gun
6. Solder
7. Multimeter

A−1.5.2 Initial Conditions/Preliminary Setup.

WARNING

The printed circuit board in the Micro Junior Fire Detection System Panel UD7A5 has three inputs of 115 Vac power coming into the panel. It is imperative that each power input be identified and shut off. Failure to remove all power inputs may result in contact with a live electrical circuit and possibly cause injury or **DEATH** on contact.

1. Perform the applicable RDA, RPG, and RBDDS equipment shutdown procedures per paragraph 3−5.4.
2. At the Main PDP UD7A2, set the Shunt Trip circuit breaker CB30 to **OFF**.

NOTE

As part of the TPMS installation, the circuit breaker for the Fire Detection Panel should have been moved from the Main PDP CB20 position to the Secondary PDP CB13 position. However, if CB13 was occupied, the electrician may have placed it elsewhere in the Secondary PDP. For configuration control, the breaker should be at CB13.

3. At the Secondary PDP UD7A3, set the Fire Suppression/Detection Panel circuit breaker CB13 to **OFF**.
4. At the Secondary PDP UD7A3, set all other circuit breakers to **OFF**.

5. At the TPS Critical Equipment Contactor (CEC) Coil Control Box UD7TPS1, set the circuit breaker to **OFF**.

NOTE

Setting these circuit breakers to off should remove the three 115 Vac inputs to the Fire Detection Panel UD7A5 printed circuit board. The audible alarm will beep indicating loss of power until the battery connection is disconnected.

6. At the Fire Detection Panel UD7A5, using the key, open the Micro Junior front panel cover and let it hang down to gain access to the printed circuit board. Use a multimeter to verify there is no line AC voltage within the panel.

A−1.5.3 Removal/Replacement Procedure.

WARNING

Failure to perform the preliminary setup can cause damage to equipment and serious injury or **DEATH**.

1. Pull down the heat−shrink insulation to expose the five soldered terminals of the transformer.
2. Tag the five terminal leads.
3. Using the soldering gun, unsolder the five terminal leads from the terminal lugs.
4. Remove and discard the heat shrink insulation from the five terminal leads.
5. Using the proper socket and/or the small crescent wrench, remove and set aside the two holding nuts and washers which are holding the transformer in place.
6. Set aside the transformer.
7. Using the proper socket and/or the small crescent wrench, install the new transformer by inserting and tightening the two holding nuts and washers.
8. Place a new 3/4″ piece of heat shrink tubing on each of the five leads. If necessary, remove the tags temporarily.
9. Using the soldering gun and solder, solder the five terminal leads to the five terminal lugs of the transformer.
10. Using the heat gun, heat the heat−shrink over the five terminals.
11. Restore AC power to the Fire Detection Panel by performing the following applicable steps:
    a. At the TPC CEC Coil Control Box UD7TPS1, set the circuit breaker to **ON**.

b. At the Secondary PDP, set circuit breaker CB13, then all other circuit breakers to **ON**.

c. At the Main PDP, set Shunt Trip circuit breaker CB30 to **ON**.

12. Momentarily press the master **RESET** switch which is located on the right side of the printed circuit board card.

13. Perform Operational Check per Table A−2.

14. Place the Fire Control front panel to its original position.

15. Using the key, lock the Fire Control front panel.

16. Restore system to normal operation. Perform applicable RDA/RPG/RBDDS equipment startup procedures per paragraph 3−5.5.

A−1.6 RDA EQUIPMENT SHELTER FIRE DETECTION AND SUPPRESSION.

The RDA equipment shelter fire detection and suppression subsystem (Refer to Figure A−1) receives 120 Vac single−phase power and converts this power to 24 Vdc for external alarm and control devices. The control circuitry operates all detection, manual discharge and abort stations, and audible and visual output circuits. When only a single smoke/fire detector senses smoke/fire, the system trouble relay contacts 17 and 18 open causing a Fire Detection Subsystem trouble alert via TB2 pin 7. Also, a Fire Detection Subsystem control panel fault causes the system trouble relay contacts 17 and 18 to open and send a Fire Detection Subsystem trouble alert via TB2 pin 7. When the photoelectric detector UD7A17 and ionization detector UD7A23 senses smoke/fire, the following occurs:

1. The system alarm relay (NO) contacts 21 and 22 close causing Relay K1 to energize.

2. Relay K1 normally closed (NC) contacts open and normally open (NO) contacts to close.

3. When K1 (NO) contacts for the trip shunt circuit close, the RDA Main Power Distribution Panel UD7A2 main power (200A) circuit breaker opens, removing power to all RDA equipment shelter equipment. Also, the Fire Detection System Control Panel K5 normally closed contacts open, thus deenergizing the Magnetic Contactor UD7S6 coil control circuit, removing all power to the Secondary PDP UD7A3.

4. When K1 (NC) contacts 1 and 7 open, a system alarm (RDA fire alarm) is initialized via TB2 pin 8.

5. With all shelter power removed, the fire detection system uses the Fire Detection Subsystem control panel 24 Vdc battery backup power.

6. The alarm horn UD7A4 sounds.

7. The alarm strobe light UD7DS1 flashes (strobes). The strobe light circuitry is slaved to the audio circuitry so when the **PUSH TO SILENCE** switch is pushed, the horn and strobe light cease to function.

8. Pressing the Manual Abort switch UD7A7 stops the predischarge timer from cycling down.

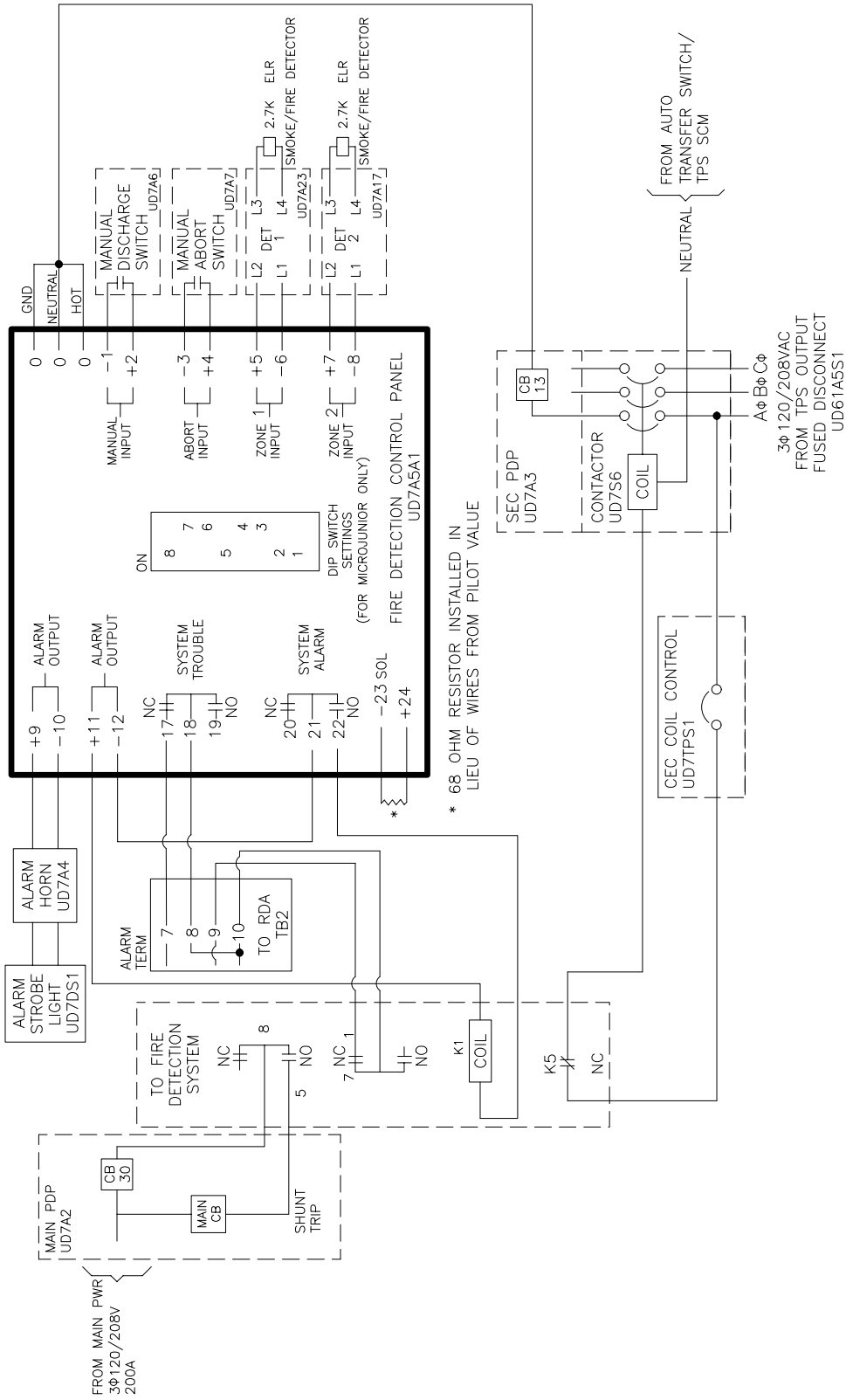

Figure A−1. RDA Equipment Shelter Fire Detection System Circuitry

INDEX

Subject	Paragraph Figure, Table Number
A	
AC Power Generation and Distribution Function	1−3.2
Generator Shelter Vac Distribution	1−3.2.1
MLOS Shelter Power Distribution	1−3.2.3
RDA Equipment Shelter Power Distribution	1−3.2.2
Accessory Control Panel Removal/Replacement	3−5.6.36
Equipment and Tools Required	3−5.6.36.1
Initial Conditions/Preliminary Setup	3−5.6.36.2
Removal/Replacement Procedure	3−5.6.36.3
Adjustment Procedure	
Clogged Filter Indicator Adjustment	3−6.4
Hatch Interlock Switch,	3−6.8 3−6.8.3
Time Delay Relay	3−6.7
Air Conditioner Clogged Filter Indicator Removal/Replacement	3−5.6.8
Equipment and Tools Required	3−5.6.8.1
Initial Conditions/Preliminary Setup	3−5.6.8.2
Removal/Replacement Procedure	3−5.6.8.3
Air Conditioner Control Circuitry	
Operational Check	
With Economizer	3−2.3 Table 3−3
Without Economizer	3−2.2 Table 3−2
Troubleshooting	3−3.3.1
Air Conditioner Control Panel, With Economizer	Figure 2−3
Air Conditioner Discharge Air Temperature Sensor Removal/Replacement	3−5.6.11
Equipment and Tools Required	3−5.6.11.1
Initial Conditions/Preliminary Setup	3−5.6.11.2
Removal/Replacement Procedure	3−5.6.11.3
Air Conditioner Exhaust Air Temperature	
Circuitry Operational Check	Table 3−12
Sensor Operational Check	3−2.12
Air Conditioner TPMS ECU Control Thermostat (RDA)	Figure 2−1

Subject	Paragraph Figure, Table Number
Air Conditioner Transmitter Exhaust Air Temperature Sensor Removal/Replacement	3−5.6.11
Equipment and Tools Required	3−5.6.11.1
Initial Conditions/Preliminary Setup	3−5.6.11.2
Removal/Replacement Procedure	3−5.6.11.3
Air Conditioner/Transmitter Discharge and Exterior Air Temperature Sensor	Figure 3−6
Air Conditioner Two Stage Control Thermostat, With Economizer (RDA)	Figure 2−2
Air Conditioner Air Temperature Sensor Removal/Replacement	
Part 1 − Air Conditioner Discharge Air Temperature Sensors	3−5.6.11.3.1
Part 2 − Transmitter Exhaust Air Temperature Sensor	3−5.6.11.3.2
Air Temperature Sensor Cal Temp/Ohm Range	Table 3−26
Air Temperature Sensors	
Part 1 − Air Conditioners Discharge	3−5.6.11.3.1
Part 2 − Transmitter Exhaust	3−5.6.11.3.2
Aircraft Warning Light	
Circuitry Diagram	Figure 1−28
Control Circuitry Operational Check	3−2.19
	Table 3−19
Removal/Replacement	3−5.6.64
Equipment and Tools Required	3−5.6.64.1
Initial Conditions/Preliminary Setup	3−5.6.64.2
Removal/Replacement Procedure	3−5.6.64.3
Alarm Strobe Light Removal/Replacement	3−5.6.18
Equipment and Tools Required	3−5.6.18.1
Initial Conditions/Preliminary Setup	3−5.6.18.2
Removal/Replacement Procedures	3−5.6.18.3
Alarm Termination Panel, Transition Power Maintenance Shelter	Figure 1−18
Alignment and Adjustment Procedures	3−6
Room Interior Air Temperature Sensor Model 753 Temperature Voltage Test	3−6.2
Equipment and Tools Required	3−6.2.1
Voltage Check Procedure	3−6.2.2
Zero and Span Adjustment Procedure	3−6.2.3
RTD Temperature Sensor Alignment	3−6.3
Equipment and Tools Required	3−6.3.1
Alignment Procedure	3−6.3.2
Clogged Filter Indicator Adjustment	3−6.4
Equipment and Tools Required	3−6.4.1
Initial Conditions/Preliminary Setup	3−6.4.2
Adjustment Procedure	3−6.4.3

Subject	Paragraph Figure, Table Number
Clogged Filter Indicator Adjustment for RDA Equipment Shelters with A/C Economizer	3−6.5
Equipment and Tools Required	3−6.5.1
Initial Conditions/Preliminary Setup	3−6.5.2
Adjustment Procedure	3−6.5.3
Fuel Level Sensor − Calibration Check and Adjustment	3−6.6
Equipment and Tools Required	3−6.6.1
Calibration Check Procedure	3−6.6.2
Fuel Level Sensor Calibration	3−6.6.3
Time Delay Relay (TD1) Checkout	3−6.7
Equipment and Tools Required	3−6.7.1
Initial Conditions/Preliminary Setup	3−6.7.2
Adjustment Procedure	3−6.7.3
Hatch Interlock Switch Adjustment	3−6.8
Equipment and Tools Required	3−6.8.1
Initial Conditions/Preliminary Setup	3−6.8.2
Adjustment Procedure	3−6.8.3
Antenna Pedestal RPIE Component Layout	Figure 1−2
Antenna Radome Deck RPIE Component Layout	Figure 1−1
Auto−Transfer Switch	
AC Power Distribution	
Kohler Generator	Figure FO4−10
Onan Generator	Figure FO4−9
TPMS	Figure FO4−9
	Figure FO4−10
Component Layout	
Kohler Generator	Figure 1−12
Onan Generator	Figure 1−11
Controls and Indicators	
Kohler Generator	Figure 2−5
Onan Generator	Figure 2−4
Flow Chart	
Kohler Generator	Figure FO4−12
Onan Generator	Figure FO4−11
Power Distribution Circuitry, Onan and Kohler Generators	Figure 4−6
Auxiliary Subsystem	1−3.5.2

Subject	Paragraph Figure, Table Number

B

Battery Charger (Kohler) Removal/Replacement . . . . . 3−5.6.53
Equipment and Tools Required . . . . . 3−5.6.53.1
Initial Conditions/Preliminary Setup . . . . . 3−5.6.53.2
Removal/Replacement Procedure . . . . . 3−5.6.53.3

Battery Charger (Onan) Removal/Replacement . . . . . 3−5.6.43
Equipment and Tools Required . . . . . 3−5.6.43.1
Initial Conditions/Preliminary Setup . . . . . 3−5.6.43.2
Removal/Replacement Procedure . . . . . 3−5.6.43.3

Battery − Perform Battery Load Test . . . . . A−1.3

C

Calibration Check and Adjustment, Fuel Level Sensor . . . . . 3−6.6
Equipment and Tools Required . . . . . 3−6.6.1
Calibration Check Procedure . . . . . 3−6.6.2
Fuel Level Sensor Calibration . . . . . 3−6.6.3

Checkout Procedures . . . . . 3−2
Air Conditioner Exhaust Air Temperature Sensor Operational Check . . . . . 3−2.12
Air Conditioner With Economizer Control Circuitry Operational Check . . . . . 3−2.3
Air Conditioner Without Economizer Control Circuitry Operational Check . . . . . 3−2.2
Aircraft Warning Light Control Circuitry Operational Check . . . . . 3−2.19
Clogged Filter Indicator Circuitry Operational Check . . . . . 3−2.14
Exterior Air Temperature Sensor Operational Check . . . . . 3−2.15
Generator Shelter Air Temperature Sensor Operational Check . . . . . 3−2.17
Generator Shelter Heating Control Circuitry Operational Check . . . . . 3−2.7
Generator Shelter Thermal Detector Operational Check . . . . . 3−2.10
Generator Shelter Venting Control Circuitry Operational Check . . . . . 3−2.5
Generator Venting Control Circuitry Operational Check . . . . . 3−2.6
Interior Air Temperature Sensor Circuitry Operational Check . . . . . 3−2.16
Radome Air Temperature Sensor Circuitry Operational Check . . . . . 3−2.18
Radome Venting Control Circuitry Check . . . . . 3−2.8
RDA Shelter Fire Suppression System Control Circuitry Operational Check . . . . . 3−2.9
Security Alarm Panel Control Circuitry Operational Check . . . . . 3−2.11
Time Delay Relay . . . . . 3−6.7
Transmitter Vent Exhaust Air Temperature Sensor Circuitry Operational Check . . . . . 3−2.13
Transmitter Venting/Control Circuitry Operational Check . . . . . 3−2.4

Subject	Paragraph Figure, Table Number
Circuit Breaker	
MLOS Power Distribution Panel Removal/Replacement	3−5.6.65
Equipment and Tools Required	3−5.6.65.1
Initial Conditions/Preliminary Setup	3−5.6.65.2
Removal/Replacement Procedure	3−5.6.65.3
Power Distribution Panel Removal/Replacement	3−5.6.2
TPMS Shelter Power Distribution System Panel Removal/Replacement	3−5.6.67
Equipment and Tools Required	3−5.6.67.1
Initial Conditions/Preliminary Setup	3−5.6.67.2
Removal/Replacement Procedure	3−5.6.67.3
Circuit Breaker CB5−CB9, Power Distribution Panel Removal/Replacement	3−5.6.25
Equipment and Tools Required	3−5.6.25.1
Initial Conditions/Preliminary Setup	3−5.6.25.2
Removal/Replacement Procedure	3−5.6.25.3
Circuit Breaker Main	
Power Distribution Panel Removal/Replacement	
Equipment and Tools Required	3−5.6.24.1
Initial Conditions/Preliminary Setup	3−5.6.24.2
Removal/Replacement Procedure	3−5.6.24.3
Power Distribution Panel UD7A2, Removal/Replacement	3−5.6.1
Equipment and Tools Required	3−5.6.1.1
Initial Conditions/Preliminary Setup	3−5.6.1.2
Removal/Replacement Procedure	3−5.6.1.3
Circuit Breaker Main CB1/3, Generator Shelter, Power Distribution Panel	3−5.6.24
Equipment and Tools Required	3−5.6.24.1
Initial Conditions/Preliminary Setup	3−5.6.24.2
Removal/Replacement Procedure	3−5.6.24.3
Circuit Breaker, Hydrogen Detector Removal and Replacement	3−5.6.70
Equipment and Tools Required	3−5.6.70.1
Initial Conditions/Preliminary Setup	3−5.6.70.2
Removal/Replacement Procedure	3−5.6.70.3
Circuit Breaker, Main Power Distribution Panel	3−5.6.1
Equipment and Tools Required	3−5.6.1.1
Initial Conditions/Preliminary Setup	3−5.6.1.2
Removal/Replacement Procedures	3−5.6.1.3
Circuit Breaker, Secondary Power Distribution Panel	3−5.6.2
Equipment and Tools Required	3−5.6.2.1
Initial Conditions/Preliminary Setup	3−5.6.2.2
Removal/Replacement Procedure	3−5.6.2.3
	Table 3−25

Subject	Paragraph Figure, Table Number
Clogged Filter Indicator	
Adjustment	3−6.4
Equipment and Tools Required	3−6.4.1
Initial Conditions/Preliminary Setup	3−6.4.2
Adjustment Procedure	3−6.4.3
Adjustment for A/C with Economizer	3−6.5
Equipment and Tools Required	3−6.5.1
Initial Conditions/Preliminary Setup	3−6.5.2
Adjustment Procedure	3−6.5.3
Circuitry Operational Check	3−2.14
	Table 3−14
Condenser Fan Motor Removal/Replacement	3−5.6.15
Equipment and Tools Required	3−5.6.15.1
Initial Conditions/Preliminary Setup	3−5.6.15.2
Removal/Replacement Procedure	3−5.6.15.3
Contactor (RDA Shelter) Removal/Replacement	3−5.6.23
Equipment and Tools Required	3−5.6.23.1
Initial Conditions/Preliminary Setup	3−5.6.23.2
Removal/Replacement Procedure	3−5.6.23.3
Contactor Assembly (Generator Shelter) Removal/Replacement	3−5.6.50
Equipment and Tools Required	3−5.6.50.1
Initial Conditions/Preliminary Setup	3−5.6.50.2
Removal/Replacement Procedure	3−5.6.50.3
Controls and Indicators	2−4

D

Damper Motor Actuator Removal/Replacement	3−5.6.61
Equipment and Tools Required	3−5.6.61.1
Initial Conditions/Preliminary Setup	3−5.6.61.2
Removal/Replacement Procedure	3−5.6.61.3
Description of Real Property Installed Equipment (RPIE) System	
General Description	1−1.1
RPIE Functional System Description	1−3.1
RPIE Tools, Equipment, and Test Equipment	1−2.1
Diesel Generator Component Layout	
Kohler Generator	Figure 1−9
Onan Generator	Figure 1−8
Dirty Filter Sensor (Indicator) Diagram	Figure 1−27

Subject | Paragraph Figure, Table Number

E

Economizer ECW−4A (P/O Model WA60) Removal/Replacement . . . . . 3−5.6.16
Equipment and Tools Required . . . . . 3−5.6.16.1
Initial Conditions/Preliminary Setup . . . . . 3−5.6.16.2
Removal/Replacement Procedure . . . . . 3−5.6.16.3

Economizer EIFM−5A (P/O Model WA601 or WA602) Removal/Replacement . . . . . 3−5.6.17
Equipment and Tools Required . . . . . 3−5.6.17.1
Initial Conditions/Preliminary Setup . . . . . 3−5.6.17.2
Removal/Replacement Procedure . . . . . 3−5.6.17.3

Electric Toilet Troubleshooting . . . . . 3−3.3.8
Equipment and Tools Required . . . . . 3−3.3.8.1
Initial Conditions/Preliminary Setup . . . . . 3−3.3.8.2
Troubleshooting Procedures . . . . . 3−3.3.8.3

Electronic Unit, Fuel Level Sensor
Equipment and Tools Required . . . . . 3−5.6.27.1
Initial Conditions/Preliminary Setup . . . . . 3−5.6.27.2
Removal/Replacement Procedure . . . . . 3−5.6.27.3

Emergency Procedures . . . . . 2−3

Environmental Control Unit, Troubleshooting . . . . . 3−3.3.7
Equipment and Tools Required . . . . . 3−3.3.7.1
Initial Conditions/Preliminary Setup . . . . . 3−3.3.7.2
Troubleshooting Procedures . . . . . 3−3.3.7.3

Equipment and Tools Required . . . . . 3−3.2.3.1
3−Phase Voltage Sensing Module PCB, Removal/Replacement . . . . . 3−5.6.51.1
Accessory Control Panel Removal/Replacement . . . . . 3−5.6.36.1
Air Conditioner Clogged Filter Indicator Removal/Replacement . . . . . 3−5.6.8.1
Air Conditioner Control Circuitry Troubleshooting . . . . . 3−3.3.1.1
Air Conditioner Discharge Air Temperature Sensor Removal/Replacement . . . . . 3−5.6.11.1
Air Conditioner Transmitter Exhaust Air Temperature Sensor Removal/Replacement 3−5.6.11.1
Aircraft Warning Light Removal/Replacement . . . . . 3−5.6.64.1
Alarm Strobe Light Removal/Replacement . . . . . 3−5.6.18.1
Battery Charger (Kohler) Removal/Replacement . . . . . Table 3−25
Battery Charger Removal/Replacement . . . . . 3−5.6.43.1
Battery − Perform Battery Load Test . . . . . A−1.3.1
Circuit Breaker
MLOS Power Distribution Panel Removal/Replacement . . . . . 3−5.6.65.1

Subject	Paragraph Figure, Table Number
Equipment and Tools Required − Continued	
Power Distribution Panel Removal/Replacement	3−5.6.1.1
	3−5.6.2.1
TPMS Shelter Power Distribution System Panel Removal/Replacement	3−5.6.67.1
Circuit Breaker CB5−CB9, Power Distribution Panel	3−5.6.25.1
Circuit Breaker Main, Power Distribution Panel Removal/Replacement	3−5.6.24.1
Circuit Breaker, Hydrogen Detector	3−5.6.70.1
Clogged Filter Indicator Adjustment	3−6.4.1
Clogged Filter Indicator Adjustment for A/C with Economizer	3−6.5.1
Condenser Fan Motor Removal/Replacement	3−5.6.15.1
Contactor (RDA Shelter) Removal/Replacement	3−5.6.23.1
Contactor Assembly (Generator Shelter) Removal/Replacement	3−5.6.50.1
Damper Motor Actuator Removal/Replacement	3−5.6.61.1
Economizer ECW−4A (P/O Model WA60) Removal/Replacement	3−5.6.16.1
Economizer EIFM−5A (P/O Model WA601 or WA602) Removal/Replacement	3−5.6.17.1
Electric Toilet Troubleshooting	3−3.3.8.1
Electronic Unit, Fuel Level Sensor	3−5.6.27.1
Environmental Control Unit Troubleshooting	3−3.3.7.1
Evaporator Fan Motor Removal/Replacement	3−5.6.14.1
Exerciser Clock Removal/Replacement	3−5.6.40.1
Exterior Air Temperature Sensor Removal/Replacement	3−5.6.13.1
Exterior Incandescent Light Removal/Replacement	3−5.6.19.1
Fire Suppression Subsystem, Performance Check	A−1.2.1
Fuel Level Sensor Calibration Check Adjustment	3−6.6.1
Fuse, Kohler Auto Transfer Switch Removal/Replacement	3−5.6.56.1
Fuses, Surge Suppressor	3−5.6.34.1
Generator Fuel Level Sensor Assembly Removal/Replacement	3−5.6.26.1
Generator Shelter, Heater Troubleshooting	3−3.3.5.1
Generator Ventilation Circuitry Troubleshooting	3−3.3.4.1
Hatch Interlock Switch Adjustment	3−6.8.1
Hydrogen Detector Removal/Replacement	3−5.6.68.1
Interior Air Temperature Sensor Removal/Replacement	3−5.6.12.1
LED Assembly, Surge Suppressor Removal/Replacement	3−5.6.31.1
Load Shed PCB Removal/Replacement	3−5.6.54.1
Manual Discharge and Abort Stations Removal/Replacement	3−5.6.5.1
Micro Controller Assembly Removal/Replacement	3−5.6.49.1
Motor, Radome Fan Removal/Replacement	3−5.6.63.1
N−G Protector, Surge Suppressor Removal/Replacement	3−5.6.33.1
Power Sentry Motherboard Removal/Replacement	3−5.6.41.1
Power Sentry PCB Removal/Replacement	3−5.6.42.1
Power Sentry Transformer PCB, Removal/Replacement	3−5.6.45.1
Printed Circuit Board, Micro 1 EV Removal/Replacement	3−5.6.4.1
Printed Circuit Board, Micro Junior Removal/Replacement	A−1.4.1

Subject	Paragraph Figure, Table Number
Equipment and Tools Required − Continued	
Program Transition Module Removal/Replacement	3−5.6.44.1
Protector Module, Surge Suppressor (RDA Shelter) Removal/Replacement	3−5.6.7.1
Protector Modules, Surge Suppressor (Generator Shelter) Removal/Replacement	3−5.6.32.1
Radome Venting Circuitry Troubleshooting	3−3.3.2.1
RDA Equipment Shelter Transmitter Vent Cooling Circuitry Troubleshooting	3−3.3.3.1
Relay, Removal/Replacement	3−5.6.59.1
Voltage Sensing	3−5.6.58.1
Relay Assembly (PCB), Dry Contact (10 Relay) Removal/Replacement	3−5.6.55.1
Relay, Accessory Control Panel, Removal/Replacement	3−5.6.37.1
Relay, Auto/Manual Transfer Control, Removal/Replacement	3−5.6.48.1
Relay, Auxiliary Contacts, Removal/Replacement	3−5.6.47.1
Relay, PCB, Dry Contact, Removal/Replacement, Dry Contact	3−5.6.52.1
Relay, Time Delay (Kohler) Removal/Replacement	3−5.6.57.1
Relay, Time Delay (Onan), Removal/Replacement, Time Delay	3−5.6.46.1
Relay, UD10A1K3−K7 Removal/Replacement	3−5.6.59.1
Relay, Voltage Sensing (VSR) UD10A1K2 Removal/Replacement	3−5.6.58.1
Room Interior Air Temperature Model 753 Temperature Voltage Test	3−6.2.1
RTD Temperature Sensor Alignment	3−6.3.1
Security Panel Alarm Circuitry Troubleshooting	3−3.3.6.1
Sensor Board, Hydrogen Detector Removal/Replacement	3−5.6.69.1
Signal Module Removal/Replacement	3−5.6.39.1
Smoke Detector, Photoelectric and Ionization Removal/Replacement	3−5.6.10.1
Spark Arrestor and Surge Suppressor, Fuel Level Sensor Removal/Replacement	3−5.6.28.1
Surge Suppressor (RDA Shelter)	
Generator Shelter Removal/Replacement	3−5.6.30.1
RDA Shelter Removal/Replacement	3−5.6.6.1
Thermal Detector Removal/Replacement	3−5.6.29.1
Thermostat UD7S3 and UD7S4, Removal/Replacement	3−5.6.20.1
Thermostat, Ventilation UD10S2, Removal/Replacement	3−5.6.35.1
Thermostat, Ventilation UD7S5 and UD7S35, Removal/Replacement	3−5.6.22.1
Time Delay Relay	3−6.7.1
TPMS ECU Thermostat Removal/Replacement	3−5.6.71.1
TPMS Electric Toilet Removal/Replacement	3−5.6.66.1
TPMS Shelter High Temperature Shutdown Thermostat Removal/Replacement	3−5.6.72.1
TPMS Shelter, High Temperature Alarm Thermostat Removal/Replacement	3−5.6.73.1
TPS Supervisory Contact Module (SCM) Circuit Board Removal/Replacement	3−5.6.74.1
Transformer, Accessory Control Panel, Removal/Replacement	3−5.6.38.1
Transformer, Kohler Auto−Transfer Switch Removal/Replacement	3−5.6.60.1
Transformer, Micro Junior Removal/Replacement	A−1.5.1
Transmitter Clogged Filter Indicator Removal/Replacement	3−5.6.9.1
Two−Stage Thermostat Removal/Replacement	3−5.6.21.1
Vent Fan Assembly Removal/Replacement	3−5.6.62.1

Subject	Paragraph Figure, Table Number
Equipment and Tools Required − Continued	
Vibrating Alarm Horn Removal/Replacement	3−5.6.3.1
Evaporator Fan Motor Removal/Replacement	3−5.6.14
Equipment and Tools Required	3−5.6.14.1
Initial Conditions/Preliminary Setup	3−5.6.14.2
Removal/Replacement Procedure	3−5.6.14.3
Exerciser Clock Removal/Replacement	3−5.6.40
Equipment and Tools Required	3−5.6.40.1
Initial Conditions/Preliminary Setup	3−5.6.40.2
Removal/Replacement Procedure	3−5.6.40.3
Exterior Air Temperature Sensor	
Circuitry Verification of Operation Check	Table 3−15
Operational Check	3−2.15
Removal/Replacement	3−5.6.13
Equipment and Tools Required	3−5.6.13.1
Initial Conditions/Preliminary Setup	3−5.6.13.2
Removal/Replacement Procedures	3−5.6.13.3
Exterior Incandescent Light Removal/Replacement	3−5.6.19
Equipment and Tools Required	3−5.6.19.1
Initial Conditions/Preliminary Setup	3−5.6.19.2
Removal/Replacement Procedures	3−5.6.19.3

F

Fire Detection and Subsystem	1−3.4
Generator Shelter Fire Detection	1−3.4.1
MLOS Shelter Fire Detection	1−3.4.3
RDA Equipment Shelter Fire Detection	1−3.4.2
Subsystem General Description	1−1.4
Fire Suppression Subsystem	
Performance Check	A−1.2
Power−up Procedures	Table 2−3
Fire Suppression System Circuitry, RDA Equipment Shelter	Figure A−1
Flowchart Symbol Convention	3−3.2.2
Fuel Level Sensor − Calibration Check Adjustment	3−6.6
Equipment and Tools Required	3−6.6.1
Calibration Check Procedure	3−6.6.2
Fuel Level Sensor Calibration	3−6.6.3

Subject	Paragraph Figure, Table Number
Functional Flow Diagram	
Discrete Status Data Monitoring	
TPMS	Figure FO4−13
RPIE Analog Status Data Processing	Figure FO4−3
Fuses (Kohler Auto−Transfer Switch) Removal/Replacement	3−5.6.56
Equipment and Tools Required	3−5.6.56.1
Initial Conditions/Preliminary Setup	3−5.6.56.2
Removal/Replacement Procedure	3−5.6.56.3
Fuses, Surge Suppressor (Generator Shelter) Removal and Replacement	3−5.6.34
Equipment and Tools Required	3−5.6.34.1
Initial Conditions/Preliminary Setup	3−5.6.34.2
	Table 3−25
Removal/Replacement Procedure	3−5.6.34.3

G

General Description	
Fire Detection and Suppression Subsystem	1−1.4
Heating, Ventilation, and Air Conditioning (HVAC) Subsystem	1−1.3
Power Generation and Distribution Subsystem	1−1.2
Radome, Towers, and Shelter Support Subsystems	1−1.6
RPIE Operating Instructions	2−1
RPIE System	1−1.1
Security and Auxiliary Subsystems	1−1.5
General Information, Alignment and Adjustment Procedures	3−6.1
Generator Control Panel, Circuitry	
Kohler Generator	Figure 4−5
Onan Generator	Figure 4−4
Generator Control Panel, Controls and Indicators	
Kohler Generator	Figure 2−7
Onan Generator	Figure 2−6
Generator Fuel Level Sensor Assembly Removal/Replacement	3−5.6.26
Equipment and Tools Required	3−5.6.26.1
Initial Conditions/Preliminary Setup	3−5.6.26.2
Removal/Replacement Procedure	3−5.6.26.3
Generator Operational Indicator Lamps, Onan Generator	Figure 2−6
Generator Shelter	
Air Temperature Sensor Circuitry Operational Check	3−2.17
Air Temperature Sensor Circuitry Verification of Operation Check	Table 3−17

Subject	Paragraph Figure, Table Number
Generator Shelter − Continued	
Automatic Transfer Switch Front Panel Controls and Indicators	
Kohler Generator	Figure 2−5
Onan Generator	Figure 2−4
Fire Detection	1−3.4.1
Fire Detection Circuit	Figure 4−2
Fire Detection Circuitry	Figure 1−23
Heater Troubleshooting	3−3.3.5
Heating Control Circuitry Operational Check	3−2.7
Heating Control Circuitry Operational Check	Table 3−7
Power Distribution	
Kohler Generator	Figure FO1−2
Onan Generator	Figure FO1−1
Sensor Inputs (Onan)	Figure FO4−6
Thermal Detector , Circuitry Operational Check	Table 3−10
Thermal Detector, Operational Check	3−2.10
Vac Distribution	1−3.2.1
Venting Circuitry	Figure 4−9
Venting Control Circuitry, Operational Check	3−2.5
Venting Control Circuitry, Operational Check	Table 3−5
Generator Shelter (Onan) Sensor Inputs	Figure FO4−6
Generator Ventilation Circuitry, Troubleshooting	3−3.3.4 Table 3−24
Generator Venting Control Circuitry, Operational Check	3−2.6 Table 3−6

H

Handling of Electrostatic Sensitive Devices (ESD)	
Card Removal/Replacement	3−5.3
ESD DIP Switch Setting	3−5.3
Hatch Interlock Switch Adjustment Procedure	3−6.8
Heating, Ventilation, and Air Conditioning (HVAC)	
Functional Description	1−3.3
Heating	1−3.3.1
RDA Equipment Shelter Air Conditioning	1−3.3.3
RDA Equipment Shelter Air Conditioning with Economizer	1−3.3.5
RDA Equipment Shelter Air Conditioning without Economizer	1−3.3.4
Ventilation	1−3.3.2

Subject	Paragraph Figure, Table Number
Heating, Ventilation, and Air Conditioning (HVAC) − Continued	
General Description	1−1.3
Power−up Procedures	Table 2−2
Hydrogen Detector, Operational Check	Table 3−23
Hydrogen Detector Removal and Replacement	3−5.6.68
Equipment and Tools Required	3−5.6.68.1
Initial Conditions/Preliminary Setup	3−5.6.68.2
Removal/Replacement Procedure	3−5.6.68.3

I

Initial Conditions/Preliminary Setup	
3−Phase Voltage Sensing Module PCB Removal/Replacement	3−5.6.51.2
Accessory Control Panel Removal/Replacement	3−5.6.36.2
Air Conditioner Clogged Filter Indicator Removal/Replacement	3−5.6.8.2
Air Conditioner Control Circuitry Troubleshooting	3−3.3.1.2
Air Conditioner Discharge Air Temperature Sensor Removal/Replacement	3−5.6.11.2
Air Conditioner Transmitter Exhaust Air Temperature Sensor Removal/Replacement	3−5.6.11.2
Aircraft Warning Light Removal/Replacement	3−5.6.64.2
Alarm Strobe Light Removal/Replacement	3−5.6.18.2
Battery Charger (Kohler) Removal/Replacement	3−5.6.53.2
Battery Charger (Onan) Removal/Replacement	3−5.6.43.2
Battery Load Test	A−1.3.2
Circuit Breaker, Power Distribution Panel Removal/Replacement	3−5.6.1.2 3−5.6.2.2
Circuit Breaker CB5−CB9, Generator Shelter Power Distribution Panel Removal/Replacement	3−5.6.25.2
Circuit Breaker Main, Generator Shelter Power Distribution Panel Removal/Replacement	3−5.6.24.2
Circuit Breaker, Microwave Line of Sight (MLOS) Power Distribution Panel Removal/Replacement	Table 3−25
Circuit Breaker, Hydrogen Detector	3−5.6.70.2
Circuit Breaker, TPMS Shelter Power Distribution System Panel Removal/Replacement	3−5.6.67.2
Clogged Filter Indicator Adjustment	3−6.4.2
Clogged Filter Indicator Adjustment for A/C with Economizer	3−6.5.2
Condenser Fan Motor Removal/Replacement	3−5.6.15.2
Contactor (RDA Shelter) Removal/Replacement	3−5.6.23.2
Contactor Assembly (Kohler Auto−Transfer Switch) Removal/Replacement	3−5.6.50.2
Damper Motor Actuator Removal/Replacement	3−5.6.61.2
Economizer ECW−4A (P/O Model WA60) Removal/Replacement	3−5.6.16.2
Economizer EIFM−5A (P/O Model WA601 or WA602) Removal/Replacement	3−5.6.17.2
Electric Toilet Troubleshooting	3−3.3.8.2

Subject	Paragraph Figure, Table Number
Initial Conditions/Preliminary Setup − Continued	
Electronic Unit, Fuel Level Sensor	3−5.6.27.2
Environmental Control Unit (TPMS), Troubleshooting	3−3.3.7.2
Evaporator Fan Motor Removal/Replacement	3−5.6.14.2
Exerciser Clock Removal/Replacement	3−5.6.40.2
Exterior Air Temperature Sensor Removal/Replacement	3−5.6.13.2
Exterior Incandescent Light Fixture Removal/Replacement	3−5.6.19.2
Fire Suppression Subsystem Performance Check	A−1.2.2
Fuse Removal/Replacement	3−5.6.56.2
Fuses, Surge Suppressor (Generator Shelter) Removal/Replacement	3−5.6.34.2
Generator Fuel Level Sensor Assembly Removal/Replacement	3−5.6.26.2
Generator Shelter, Heater Troubleshooting	3−3.3.5.2
Generator Ventilation Circuitry Troubleshooting	3−3.3.4.2
Hatch Interlock Switch Adjustment	3−6.8.2
Hydrogen Detector Removal/Replacement	3−5.6.68.2
Interior Air Temperature Sensor Removal/Replacement	3−5.6.12.2
LED Assembly, Surge Suppressor (Generator Shelter) Removal/Replacement	3−5.6.31.2
Load Shed PCB Removal/Replacement	3−5.6.54.2
Manual Discharge and Abort Stations Removal/Replacement	3−5.6.5.2
MicroController Assembly Removal/Replacement	3−5.6.49.2
Motor, Radome Fan Removal/Replacement	3−5.6.63.2
N−G Protector, Surge Suppressor (Generator Shelter) Removal/Replacement	3−5.6.33.2
Power Sentry Motherboard Removal/Replacement	3−5.6.41.2
Power Sentry PCB Removal/Replacement	3−5.6.42.2
Power Sentry Transformer PCB Assembly Removal/Replacement	3−5.6.45.2
Printed Circuit Board, Micro 1 EV Removal/Replacement	3−5.6.4.2
Printed Circuit Board, Micro Junior Removal/Replacement	A−1.4.2
Program Transition Module Removal/Replacement	3−5.6.44.2
Protector Module, Surge Suppressor (RDA Shelter) Removal/Replacement	3−5.6.7.2
Protector Modules, Surge Suppressor (Generator Shelter) Removal/Replacement	3−5.6.32.2
Radome Venting Circuitry Troubleshooting	3−3.3.2.2
RDA Equipment Shelter Transmitter Vent Cooling Circuitry Troubleshooting	3−3.3.3.2
Relay, Removal/Replacement	3−5.6.59.2
Relay Assembly (PCB), Dry Contact (10 Relay) Removal/Replacement	3−5.6.55.2
Relay, Accessory Control Panel, Removal/Replacement	3−5.6.37.2
Relay, Auto/Manual Transfer Control, Removal/Replacement	3−5.6.48.2
Relay, Auxiliary Contacts, Removal/Replacement	3−5.6.47.2
Relay, PCB, Dry Contact Removal/Replacement	3−5.6.52.2
Relay, Time Delay (Kohler)	Table 3−25
Relay, Time Delay (Onan) Removal/Replacement	3−5.6.46.2
Relay, Voltage Sensing Removal/Replacement	3−5.6.58.2
Security Panel Alarm Circuitry Troubleshooting	3−3.3.6.2
Sensor Board, Hydrogen Detector Removal/Replacement	Table 3−25

Subject	Paragraph Figure, Table Number
Initial Conditions/Preliminary Setup − Continued	
Signal Module Removal/Replacement	3−5.6.39.2
Smoke Detector, Photoelectric and Ionization Removal/Replacement	3−5.6.10.2
Spark Arrester and Surge Suppressor, Fuel Level Sensor	3−5.6.28.2
Surge Suppressor (RDA Shelter) Removal/Replacement	3−5.6.6.2
Surge Suppressor (Generator Shelter) Removal/Replacement	3−5.6.30.2
Thermal Detector Removal/Replacement	3−5.6.29.2
Thermostat, Removal/Replacement	
UD7S3 and S4	3−5.6.20.2
Ventilation	3−5.6.35.2
Ventilation UD7S5 and UD7S35	3−5.6.22.2
Time Delay Relay Checkout	3−6.7.2
TPMS ECU Thermostat Removal/Replacement	3−5.6.71.2
TPMS Electric Toilet, Removal/Replacement	3−5.6.66.2
TPMS Shelter High Temperature Alarm Thermostat Removal/Replacement	3−5.6.73.2
TPMS Shelter High Temperature Shutdown Thermostat Removal/Replacement	3−5.6.72.2
TPS Supervisory Contact Module (SCM) Circuit Board Removal/Replacement	3−5.6.74.2
Transformer, Removal/Replacement	3−5.6.60.2
Transformer, Accessory Control Panel, Removal/Replacement	3−5.6.38.2
Transformer, Micro Junior Removal/Replacement	A−1.5.2
Transmitter Clogged Filter Indicator Removal/Replacement	3−5.6.9.2
Two−Stage Thermostat Removal/Replacement	3−5.6.21.2
Vent Fan Assembly Removal/Replacement	3−5.6.62.2
Vibrating Alarm Horn Removal/Replacement	3−5.6.3.2
Interior Air Temperature Sensor, Circuitry, Verification of Operation Check	Table 3−16
Interior Air Temperature Sensor	
Circuitry, Operational Check	3−2.16
Removal/Replacement	3−5.6.12
Equipment and Tools Required	3−5.6.12.1
Initial Conditions/Preliminary Setup	3−5.6.12.2
Removal/Replacement Procedures	3−5.6.12.3
Internal Temperature Sensor, Weed Model 753	Figure 3−3
INTRODUCTION, RPIE System Description	1−1

K

Kohler Automatic Transfer Switch Component Layout	Figure 1−12

Subject	Paragraph Figure, Table Number

L

LED Assembly, Surge Suppressor (Generator Shelter)
- Removal and Replacement . . . . . 3−5.6.31
  - Equipment and Tools Required . . . . . 3−5.6.31.1
  - Initial Conditions/Preliminary Setup . . . . . 3−5.6.31.2
    Table 3−25
  - Removal/Replacement Procedure . . . . . 3−5.6.31.3

Load Shed PCB, Removal/Replacement . . . . . 3−5.6.54
- Equipment and Tools Required . . . . . 3−5.6.54.1
- Initial Conditions/Preliminary Setup . . . . . 3−5.6.54.2
- Removal/Replacement Procedure . . . . . 3−5.6.54.3

M

Manual Discharge and Abort Stations Removal/Replacement . . . . . 3−5.6.5
- Equipment and Tools Required . . . . . 3−5.6.5.1
- Initial Conditions/Preliminary Setup . . . . . 3−5.6.5.2
- Removal/Replacement Procedure . . . . . 3−5.6.5.3

MicroController Assembly Removal/Replacement . . . . . 3−5.6.49
- Equipment and Tools Required . . . . . 3−5.6.49.1
- Initial Conditions/Preliminary Setup . . . . . 3−5.6.49.2
- Removal/Replacement Procedure . . . . . 3−5.6.49.3

Micro 1 EV or Junior Control Panel . . . . . Figure 1−20

Micro Junior Control Panel Fire Suppression Data
- Fire Detection System − Performance Check . . . . . A−1.2
- General Description . . . . . A−1.1
- Perform Battery Load Test . . . . . A−1.3
- Printed Circuit Board, Micro Junior . . . . . A−1.4
- RDA Equipment Shelter Fire Detection and Suppression . . . . . A−1.6
- Transformer, Micro Junior . . . . . A−1.5

MLOS Shelter
- Fire Detection . . . . . 1−3.4.3
- Power Distribution . . . . . 1−3.2.3
  Figure 4−12
- Power Distribution Panel . . . . . Figure 1−17
- RPIE Configuration . . . . . Figure 1−7
- Vac Distribution . . . . . Figure 1−22

Subject	Paragraph Figure, Table Number
Motor, Radome Fan Removal/Replacement	3−5.6.63
Equipment and Tools Required	3−5.6.63.1
Initial Conditions/Preliminary Setup	3−5.6.63.2
Removal/Replacement Procedure	3−5.6.63.3

N

N−G Protector, Surge Suppressor (Generator Shelter) Removal and Replacement	3−5.6.33
Equipment and Tools Required	3−5.6.33.1
Initial Conditions/Preliminary Setup	3−5.6.33.2
	Table 3−25
Removal/Replacement Procedure	3−5.6.33.3

O

Onan OT III Automatic Transfer Switch Component Layout	Figure 1−11
Operational Check Procedures, RDA Tower/Utilities	Table 2−6
Operational Instructions	2−2

P

Power Distribution	
RDA Logic and Control for RDA Shelters	
Kohler	Fig FO4−2
Onan	Fig FO4−1
Power Distribution Panel, Main	1−3.2.2.1
Power Distribution Panel, Secondary	1−3.2.2.2
Power Distribution Subsystem Power−up Procedures	Table 2−1
Power Generation and Distribution Subsystem General Description	1−1.2
Power Sentry Motherboard Removal/Replacement	3−5.6.41
Equipment and Tools Required	3−5.6.41.1
Initial Conditions/Preliminary Setup	3−5.6.41.2
Removal/Replacement Procedure	3−5.6.41.3
Power Sentry PCB Removal/Replacement	3−5.6.42
Equipment and Tools Required	3−5.6.42.1
Initial Conditions/Preliminary Setup	3−5.6.42.2
Removal/Replacement Procedure	3−5.6.42.3

Subject	Paragraph Figure, Table Number
Power Sentry Transformer PCB Assembly Removal/Replacement	3−5.6.45
Equipment and Tools Required	3−5.6.45.1
Initial Conditions/Preliminary Setup	3−5.6.45.2
Removal/Replacement Procedure	3−5.6.45.3
Preventive Maintenance Procedures	
Fire Detection System − Performance Check	A−1.2.3
Perform Battery Load Test	A−1.3.3
Primary Fault Isolation Flowcharts	3−3.2.1
Printed Circuit Board, Micro 1 EV Removal/Replacement	3−5.6.4
Equipment and Tools Required	3−5.6.4.1
Initial Conditions/Preliminary Setup	3−5.6.4.2
Removal/Replacement Procedure	3−5.6.4.3
Printed Circuit Board, Micro Junior Removal/Replacement	A−1.4
Equipment and Tools Required	A−1.4.1
Initial Conditions/Preliminary Setup	A−1.4.2
Removal/Replacement Procedure	A−1.4.3
Program Transition Module Removal/Replacement	3−5.6.44
Equipment and Tools Required	3−5.6.44.1
Initial Conditions/Preliminary Setup	3−5.6.44.2
Removal/Replacement Procedure	3−5.6.44.3
Protector Module, Surge Suppressor (RDA Shelter) Removal and Replacement	3−5.6.7
Equipment and Tools Required	3−5.6.7.1
Initial Conditions/Preliminary Setup	3−5.6.7.2
	Table 3−25
Removal/Replacement Procedure	3−5.6.7.3
Protector Modules, Surge Suppressor (Generator Shelter) Removal and Replacement	3−5.6.32
Equipment and Tools Required	3−5.6.32.1
Initial Conditions/Preliminary Setup	3−5.6.32.2
Removal/Replacement Procedure	3−5.6.32.3

R

Radar and MLOS Towers	1−3.6.2
Radiation Hazards	Figure SS−1
Radome	1−3.6.1
Air Temperature Sensor Circuitry Operational Check	3−2.18
Equipment Shelter Sound Powered Telephone (Intercom) Circuit Diagram	Figure 4−11
Equipment Shelter Standard Telephone (Intercom) Circuit Diagram	Figure 4−10
Sensor Diagram	Figure 4−1
Temperature Sensor and RTD Circuitry	Figure 4−3

Subject	Paragraph Figure, Table Number
Radome, Air Temperature Sensor Circuitry Operational Check	Table 3−18
Radome, Towers, MLOS Antenna and Shelter Characteristics	Table 1−5
Radome Venting	
Circuitry	Figure 4−8
Circuitry Troubleshooting	3−3.3.2
Control Circuitry Check	3−2.8
Control Circuitry Verification of Operation Check	Table 3−8
Control Thermostat	Figure 2−9
Radome, Tower, and Shelter Support Subsystem	
Functions	1−3.6
Radar and MLOS Towers	1−3.6.2
Radome	1−3.6.1
Shelters	1−3.6.3
General Description	1−1.6
RDA Equipment Shelter	
Air Conditioning	1−3.3.3
Air Conditioning with Economizer	1−3.3.5
Air Conditioning without Economizer	1−3.3.4
Configuration (DoD)	Figure 1−5
Configuration (NWS)	Figure 1−5
Fire Detection and Suppression	1−3.4.2
Fire Detection System Circuitry	Figure 1−24 Figure A−1
Power Distribution	1−3.2.2 Figure FO1−3
Power Distribution, Main	1−3.2.2.1 Figure 1−14
Power Distribution Panel, Secondary	1−3.2.2.2 Figure 1−15
Transmitter Vent Cooling Circuitry Troubleshooting	3−3.3.3
RDA Generator Shelter, Configuration	Figure 1−3
RDA Generator Shelter Equipment Layout, Configuration	Figure 1−4
RDA Sensor Wiring Diagram	
Kohler	Figure FO4−8
Onan	Figure FO4−7
RDA Logic and Control for RDA Shelter	
Kohler Power Distribution	Figure FO4−2
Onan Power Distribution	Figure FO4−1
RDA Shelter Fire Detection Subsystem Circuitry, Operational Check	3−2.9 Table 3−9

Subject	Paragraph Figure, Table Number
RDA Shelter Sensor and Vent Location	Figure 1−19
RDA Site Air Conditioner Setup	Table 1−6
RDA Site Generator Shelter Power Distribution Panel	Figure 1−13
RDA/RPG/RBDDS Equipment Shutdown Procedures	3−5.4
RDA/RPG/RBDDS Equipment Startup Procedures	3−5.5
Relay	
Removal/Replacement	3−5.6.59
Equipment and Tools Required	3−5.6.59.1
Initial Conditions/Preliminary Setup	3−5.6.59.2
Removal/Replacement Procedure	3−5.6.59.3
Time Delay (Kohler) Removal/Replacement	3−5.6.57
Equipment and Tools Required	3−5.6.57.1
Initial Conditions/Preliminary Setup	3−5.6.57.2
Removal/Replacement Procedure	3−5.6.57.3
Time Delay (Onan) Removal/Replacement	3−5.6.46
Equipment and Tools Required	3−5.6.46.1
Initial Conditions/Preliminary Setup	3−5.6.46.2
Removal/Replacement Procedure	3−5.6.46.3
Voltage Sensing Removal/Replacement	3−5.6.58
Equipment and Tools Required	3−5.6.58.1
Initial Conditions/Preliminary Setup	3−5.6.58.2
Removal/Replacement Procedure	3−5.6.58.3
Relay Assembly (PCB), Dry Contact (10 Relay) Removal/Replacement	3−5.6.55
Equipment and Tools Required	3−5.6.55.1
Initial Conditions/Preliminary Setup	3−5.6.55.2
Removal/Replacement Procedure	3−5.6.55.3
Relay, Accessory Control Panel, Removal/Replacement	3−5.6.37
Equipment and Tools Required	3−5.6.37.1
Initial Conditions/Preliminary Setup	3−5.6.37.2
Removal/Replacement Procedure	3−5.6.37.3
Relay, Auto/Manual Transfer Control, Removal/Replacement	3−5.6.48
Equipment and Tools Required	3−5.6.48.1
Initial Conditions/Preliminary Setup	3−5.6.48.2
Removal/Replacement Procedure	3−5.6.48.3
Relay, Auxiliary Contacts, Removal/Replacement	3−5.6.47
Equipment and Tools Required	3−5.6.47.1
Initial Conditions/Preliminary Setup	3−5.6.47.2
Removal/Replacement Procedure	3−5.6.47.3

Subject	Paragraph Figure, Table Number
Relay, PCB, Dry Contact, Removal/Replacement	3−5.6.52
Equipment and Tools Required	3−5.6.52.1
Initial Conditions/Preliminary Setup	3−5.6.52.2
Removal/Replacement Procedure	3−5.6.52.3
Removal and Replacement Procedures	3−5.6
Accessory Control Panel Removal/Replacement	3−5.6.36
Air Conditioner Clogged Filter Indicator Removal/Replacement	3−5.6.8
Air Conditioner Discharge Air Temperature Sensors Removal/Replacement	3−5.6.11
Air Conditioner Transmitter Exhaust Air Temperature Sensor Removal/Replacement	3−5.6.11
Aircraft Warning Light Removal/Replacement	3−5.6.64
Alarm Strobe Light Removal/Replacement	3−5.6.18
Battery Charger (Kohler) Removal/Replacement	3−5.6.53
Battery Charger (Onan) Removal/Replacement	3−5.6.43
Circuit Breaker	
MLOS Power Distribution Panel Removal/Replacement	3−5.6.65
Power Distribution Panel Removal/Replacement	3−5.6.1
	3−5.6.2
Circuit Breaker CB5−CB9, Power Distribution Panel Removal/Replacement	3−5.6.25
Circuit Breaker Main, Power Distribution Panel Removal/Replacement	3−5.6.24
Circuit Breaker, TPMS Shelter Power Distribution System Panel	3−5.6.67
Condenser Fan Motor Removal/Replacement	3−5.6.15
Contactor (RDA Shelter) Removal/Replacement	3−5.6.23
	3−5.6.23.3
Contactor Assembly (Generator Shelter) Removal/Replacement	3−5.6.50
Damper Motor Actuator Removal/Replacement	3−5.6.61
Economizer ECW−4A (P/O Model WA60) Removal/Replacement	3−5.6.16
Economizer EIFM−5A (P/O Model WA601 or WA602) Removal/Replacement	3−5.6.17
Electronic Unit, Fuel Level Sensor	3−5.6.27
	3−5.6.27.3
Evaporator Fan Motor Removal/Replacement	3−5.6.14
Exerciser Clock Removal/Replacement	3−5.6.40
Exterior Air Temperature Sensor Removal/Replacement	3−5.6.13
Exterior Incandescent Light Removal/Replacement	3−5.6.19
Fuse Removal/Replacement	3−5.6.56
Generator Fuel Level Sensor Assembly Removal/Replacement	3−5.6.26
Handling of Electrostatic Sensitive Devices (ESDs)	3−5.3
Interior (Room) Air Temperature Sensor Removal/Replacement	3−5.6.12
Load Shed PCB	3−5.6.51
	3−5.6.54
Manual Discharge and Abort Stations Removal/Replacement	3−5.6.5
Micro Controller Assembly Removal/Replacement	3−5.6.49
Motor, Radome Fan Removal/Replacement	3−5.6.63
Power Sentry Motherboard Removal/Replacement	3−5.6.41

Subject	Paragraph Figure, Table Number
Removal and Replacement Procedures − Continued	
Power Sentry Transformer PCB Assembly	3−5.6.45
Printed Circuit Board, Micro 1 EV Removal/Replacement	3−5.6.4
Printed Circuit Board, Micro 1 EV	3−5.6.4.3
Printed Circuit Board, Micro Junior Removal/Replacement	A−1.4
Printed Circuit Board, Micro Junior	A−1.4.3
Program Transition Module Removal/Replacement	3−5.6.44
Protector Module, Surge Suppressor	3−5.6.7.3
Relay Assembly (PCB), Dry Contact (10 Relay) Removal/Replacement, Dry Contact	3−5.6.55
Relay Removal/Replacement	3−5.6.59
Time Delay (Kohler)	3−5.6.57
Voltage Sensing	3−5.6.58
Relay, Accessory Control Panel Removal/Replacement	3−5.6.37
Relay, Auto/Manual Transfer Control Removal/Replacement	3−5.6.48
Relay, Auxiliary Contacts Removal/Replacement	3−5.6.47
Relay, PCB, Dry Contact Removal/Replacement, Dry Contact	3−5.6.52
Relay, Time Delay (Onan) Removal/Replacement	Table 3−25
Signal Module Removal/Replacement	3−5.6.39
Smoke Detector, Photoelectric and Ionization Removal/Replacement	3−5.6.10
Spark Arrestor and Surge Suppressor, Fuel Level Sensor	3−5.6.28.3
Surge Suppressor	3−5.6.6.3
Thermal Detector Removal/Replacement	3−5.6.29
Thermostat Removal/Replacement	3−5.6.20
Thermostat, Ventilation Removal/Replacement	3−5.6.22 3−5.6.35
TPMS Electric Toilet	3−5.6.66
TPMS Shelter High Temperature Shutdown Thermostat	3−5.6.72.3
Transformer Removal/Replacement	3−5.6.60
Transformer, Accessory Control Panel Removal/Replacement	3−5.6.38
Transformer, Micro Junior	A−1.5.3
Transmitter Clogged Filter Indicator Removal/Replacement	3−5.6.9
Two−Stage Thermostat Removal/Replacement	3−5.6.21
Vent Fan Assembly Removal/Replacement	Table 3−25
Vibrating Alarm Horn Removal/Replacement	3−5.6.3
Removing the TPS from Normal Operation/TPS Shutdown Procedure	Table 2−8
Room Interior Air Temperature Sensor Model 753 Temperature Voltage Test	3−6.2
Equipment and Tools Required	3−6.2.1
Voltage Check Procedure	3−6.2.2
Zero and Span Adjustment Procedure	3−6.2.3
RPIE Analog Status Data Processing, Functional Flow Diagram	Figure FO4−3

Subject	Paragraph Figure, Table Number
RPIE Discrete Status Data Monitoring, Functional Flow Diagram	
Kohler Generator and TPMS	Figure FO4−5
Onan Generator and TPMS	Figure FO4−4
RPIE Fault Isolation	3−3.2
Flowchart Symbol Convention	3−3.2.2
Primary Fault Isolation Flowcharts	3−3.2.1
Secondary Fault Isolation Procedures	3−3.2.3
RPIE Fault Isolation Flowchart Tower Utilities	
Maint Mandatory	Figure 3−1
Maint Required	Figure 3−2
RPIE Fault Maintenance Procedures	3−3.3
Air Conditioner Control Circuitry Troubleshooting	3−3.3.1
Electric Toilet Troubleshooting	3−3.3.8
Environmental Control Unit Troubleshooting	3−3.3.7
Generator Shelter Heater Troubleshooting	3−3.3.5
Generator Ventilation Circuitry Troubleshooting	3−3.3.4
Radome Venting Circuitry Troubleshooting	3−3.3.2
RDA Equipment Shelter Transmitter Vent Cooling Circuitry Troubleshooting	3−3.3.3
Security Panel Alarm Circuitry Troubleshooting	3−3.3.6
RPIE Functional System Description	
AC Power Generation and Distribution Function	1−3.2
Fire Detection and Suppression	1−3.4
Heating, Venting, and Air Conditioning (HVAC) Functional Description	1−3.3
Radome, Tower, and Shelter Support Subsystem Functions	1−3.6
Security and Auxiliary Subsystem Function	1−3.5
RPIE LRU and Component Removal/Replacement and General Considerations	3−5.2
RPIE Major Fire Detection and Suppression Component Description	Table 1−3
RPIE Major Heating, Ventilation and Air Conditioning Component Description	Table 1−2
RPIE Major Power Generation and Distribution Component Description	Table 1−1
RPIE Major Security and Auxiliary Component Description	Table 1−4
RPIE Operating Instructions	
Controls and Indicators	2−4
Emergency Procedures	2−3
General Description	2−1
Operational Instructions	2−2
RPIE Power Shutdown Procedures	Table 2−5
RPIE Removal/Replacement Procedures	Table 3−25
RPIE System Checkout Index	Table 3−1

Subject	Paragraph Figure, Table Number
RTD Resistance Chart	Figure 3−4
RTD Temperature Sensor Alignment Diagrams	Figure 3−5
RTD Temperature Sensor Alignment (for new replacement)	3−6.3
Alignment Procedure	3−6.3.2
Equipment and Tools Required	3−6.3.1

S

Secondary Fault Isolation Procedures	3−3.2.3
Equipment and Tools Required	3−3.2.3.1
TU1	3−3.2.3.2
TU2	3−3.2.3.3
TU3	3−3.2.3.4
TU4	3−3.2.3.5
Security Alarm Panel Control Circuitry Operational Check	3−2.11 Table 3−11
Security and Auxiliary Subsystem	1−3.5
Auxiliary Subsystem Function	1−3.5.2
General Description	1−1.5
Security Subsystem Function	1−3.5.1
Security and Auxiliary Subsystem, Power−up Procedures	Table 2−4
Security Panel Alarm Circuitry Troubleshooting	3−3.3.6
Equipment and Tools Required	3−3.3.6.1
Initial Conditions/Preliminary Setup	3−3.3.6.2
Troubleshooting Procedures	3−3.3.6.3
Security Panel Diagram	Figure 1−25
Security Subsystem	1−3.5.1
Sensor Board, Hydrogen Detector Removal and Replacement	3−5.6.69
Equipment and Tools Required	3−5.6.69.1
Initial Conditions/Preliminary Setup	3−5.6.69.2
Removal/Replacement Procedure	3−5.6.69.3
Servicing (Preventive Maintenance)	3−4
Description	3−4.1
Shelters	1−3.6.3
Shelters, TPMS	
Power Distribution System Panel (Type 1 and 2)	Figure 1−16
Power Distribution System Panel (Type 4, 5, 6, and 9)	Figure 1−16
Shutdown Procedures, RDA/RPG/RBDDS Equipment	3−5.4

Subject	Paragraph Figure, Table Number
Signal Module Removal/Replacement	3−5.6.39
Equipment and Tools Required	3−5.6.39.1
Initial Conditions/Preliminary Setup	3−5.6.39.2
Removal/Replacement Procedure	3−5.6.39.3
Smoke Detector, Photoelectric and Ionization Removal/Replacement	3−5.6.10
Equipment and Tools Required	3−5.6.10.1
Initial Conditions/Preliminary Setup	3−5.6.10.2
Removal/Replacement Procedures	3−5.6.10.3
Spark Arrestor and Surge Suppressor, Fuel Level Sensor	3−5.6.28
Equipment and Tools Required	3−5.6.28.1
Initial Conditions/Preliminary Setup	3−5.6.28.2
Removal/Replacement Procedures	3−5.6.28.3
Startup Procedures, RDA/RPG/RBDDS Equipment	3−5.5
Step Span Switch and Zero and Span Controls	Figure 3−6 Figure 3−7
Surge Protector Removal/Replacement	3−5.6.30
Equipment and Tools Required	3−5.6.30.1
Initial Conditions/Preliminary Setup	3−5.6.30.2
Removal/Replacement Procedure	3−5.6.30.3
Surge Suppressor Removal and Replacement	3−5.6.6
Equipment and Tools Required	3−5.6.6.1
Initial Conditions/Preliminary Setup	3−5.6.6.2
Removal/Replacement Procedure	3−5.6.6.3

T

Temperature and Fuel Level Sensor Diagram	Figure 1−26
Temperature Range	Table 1−7 Table 1−8
Thermal Detector Removal/Replacement	3−5.6.29
Equipment and Tools Required	3−5.6.29.1
Initial Conditions/Preliminary Setup	3−5.6.29.2
Removal/Replacement Procedure	3−5.6.29.3
Thermostat (UD7S3 and S4) Removal/Replacement	3−5.6.20
Equipment and Tools Required	3−5.6.20.1
Initial Conditions/Preliminary Setup	3−5.6.20.2
Removal/Replacement Procedures	3−5.6.20.3

Subject	Paragraph Figure, Table Number
Thermostat, Ventilation (UD10S2) Removal/Replacement	3−5.6.35
Equipment and Tools Required	3−5.6.35.1
Initial Conditions/Preliminary Setup	3−5.6.35.2
Removal/Replacement Procedures	3−5.6.35.3
Thermostat, Ventilation (UD7S5 and UD7S35) Removal/Replacement	3−5.6.22
Equipment and Tools Required	3−5.6.22.1
Initial Conditions/Preliminary Setup	3−5.6.22.2
Removal/Replacement Procedures	3−5.6.22.3
Time Delay Relay Checkout	3−6.7
Adjustment Procedure	3−6.7.3
Equipment and Tools Required	3−6.7.1
Initial Conditions/Preliminary Setup	3−6.7.2
Tower Security Gate	Figure 1−21
Tower Utility Performance Data Parameters	Table 2−7
TPMS	
Configuration (Type 1, 2, and 4)	Figure 1−6
Configuration (Type 5 and 9)	Figure 1−6
Configuration (Type 6)	Figure 1−6
Environmental Control System	1−3.3.6
Operational Check	
Electric Toilet	3−2.21
Environmental Control Unit	3−2.20
Power Distribution	1−3.2.4
TPMS, Discrete Status Data Monitoring, Functional Flow Diagram	Figure FO4−13
TPMS ECU Thermostat Removal and Replacement	3−5.6.71
Equipment and Tools Required	3−5.6.71.1
Initial Conditions/Preliminary Setup	3−5.6.71.2
Removal/Replacement Procedure	3−5.6.71.3
TPMS ECU Thermostat Removal/Replacement	3−5.6.71
TPMS, Electrical Power Distribution	Figure FO1−4
TPMS Electric Toilet, Removal/Replacement	3−5.6.66
Equipment and Tools Required	3−5.6.66.1
Initial Conditions/Preliminary Setup	3−5.6.66.2
Removal/Replacement Procedure	3−5.6.66.3
TPMS, Operational Check	
Electric Toilet	Table 3−21
Environmental Control Unit	Table 3−20

Subject	Paragraph Figure, Table Number
TPMS Shelter	
Power Distribution System Panel (Type 1 and 2)	Figure 1−16
Power Distribution System Panel (Type 4, 5, 6, and 9)	Figure 1−16
TPMS Shelter, High Temperature Alarm Thermostat, Removal and Replacement	3−5.6.73
Equipment and Tools Required	3−5.6.73.1
Initial Conditions/Preliminary Setup	3−5.6.73.2
	Table 3−25
Removal/Replacement Procedure	3−5.6.73.3
TPMS Shelter High Temperature Shutdown Thermostat Removal and Replacement	3−5.6.72
Equipment and Tools Required	3−5.6.72.1
Initial Conditions/Preliminary Setup	3−5.6.72.2
Removal/Replacement Procedure	3−5.6.72.3
TPMS Shelter High Temperature Alarm Thermostat Removal/Replacement	3−5.6.73
Equipment and Tools Required	3−5.6.73.1
Initial Conditions/Preliminary Setup	3−5.6.73.2
Removal/Replacement Procedure	3−5.6.73.3
TPS	
Electrical Power Distribution	1−3.2.4.1
Operational Check	Table 3−22
Power−up/Restoring TPS to Normal Operation Procedure	Table 2−9
TPS Control and Monitor Panel Controls and Indicators	Figure 2−8
TPS Schematic Diagram	
Battery Cabinet, 685/1085	Figure FO4−15
Supervisory Contact Board (Customer Connections)	Figure FO4−16
Top Leve, Powerware 80	Figure FO4−14
TPS Supervisory Contact Module (SCM) Circuit Board, Removal/Replacement	3−5.6.74
Equipment and Tools Required	3−5.6.74.1
Initial Conditions/Preliminary Setup	3−5.6.74.2
Removal/Replacement Procedure	3−5.6.74.3
TPS Unit, Operational Check	3−2.22
Transformer Removal/Replacement	3−5.6.60
Equipment and Tools Required	3−5.6.60.1
Initial Conditions/Preliminary Setup	3−5.6.60.2
Removal/Replacement Procedure	3−5.6.60.3
Transformer, Accessory Control Panel, Removal/Replacement	3−5.6.38
Equipment and Tools Required	3−5.6.38.1
Initial Conditions/Preliminary Setup	3−5.6.38.2
Removal/Replacement Procedure	3−5.6.38.3

Subject	Paragraph Figure, Table Number
Transition Power Maintenance Shelter	
Alarm Termination Panel	Figure 1−18
Configuration (Type 1, 2, and 4)	Figure 1−6
Configuration (Type 5 and 9)	Figure 1−6
Configuration (Type 6)	Figure 1−6
Power Distribution	1−3.2.4
Transition Power Source	
Component Layout (Type 1, 2, and 4)	Figure 1−10
Component Layout (Type 5 and later)	Figure 1−10
Electrical Power Distribution	1−3.2.4.1
Power Distribution	Figure FO1−5
Transmitter Clogged Filter Indicator Removal/Replacement	3−5.6.9
Equipment and Tools Required	3−5.6.9.1
Initial Conditions/Preliminary Setup	3−5.6.9.2
Removal/Replacement Procedures	3−5.6.9.3
Transmitter Vent Exhaust Air Temperature Sensor Circuitry Operational Check	3−2.13 Table 3−13
Transmitter Venting Circuitry	Figure 4−7
Transmitter Venting Control Circuitry Operational Check	3−2.4 Table 3−4
Troubleshooting Procedures	
Air Conditioning Control Circuitry Troubleshooting	3−3.3.1.3
Electric Toilet Troubleshooting	3−3.3.8.3
Environmental Control Unit Troubleshooting	3−3.3.7.3
Generator Shelter Troubleshooting	3−3.3.5.3
Generator Ventilation Circuitry Troubleshooting	3−3.3.4.3
Radome Venting Circuitry Troubleshooting	3−3.3.2.3
RDA Equipment Shelter Transmitter Vent Cooling Circuitry Troubleshooting	3−3.3.3.3
Security Panel Alarm Circuitry Troubleshooting	3−3.3.6.3
TU1, Secondary Fault Isolation	3−3.2.3.2
TU2, Secondary Fault Isolation	3−3.2.3.3
TU3, Secondary Fault Isolation	3−3.2.3.4
TU4, Secondary Fault Isolation	3−3.2.3.5
Two−Stage Thermostat Removal/Replacement	3−5.6.21
Equipment and Tools Required	3−5.6.21.1
Initial Conditions/Preliminary Setup	3−5.6.21.2
Removal/Replacement Procedure	3−5.6.21.3

Subject — Paragraph Figure, Table Number

V

Vent Fan Assembly Removal/Replacement . . . . . 3−5.6.62
Equipment and Tools Required . . . . . 3−5.6.62.1
Initial Conditions/Preliminary Setup . . . . . 3−5.6.62.2
Removal/Replacement Procedure . . . . . 3−5.6.62.3

Ventilation . . . . . 1−3.3.2

Vibrating Alarm Horn Removal/Replacement . . . . . 3−5.6.3
Equipment and Tools Required . . . . . 3−5.6.3.1
Initial Conditions/Preliminary Setup . . . . . 3−5.6.3.2
Removal/Replacement Procedures . . . . . 3−5.6.3.3

Voltage Check Procedure Room Interior Air Temperature Model 753 . . . . . 3−6.2.2

W

Wiring Diagrams
General Description . . . . . 4−1.1
RDA Sensor
Kohler . . . . . Figure FO4−8
Onan . . . . . Figure FO4−7
Wiring Diagrams . . . . . 4−2

Z

Zero and Span Adjustment Procedure, Room Interior Air Temperature Sensor Model 753
Temperature Voltage Test . . . . . 3−6.2.3

Numbers

3−Phase Voltage Sensing Module PCB, Removal/Replacement . . . . . 3−5.6.51
Equipment and Tools Required . . . . . 3−5.6.51.1
Initial Conditions/Preliminary Setup . . . . . 3−5.6.51.2
Removal/Replacement Procedure . . . . . 3−5.6.51.3

GLOSSARY

Acronym or Non−Standard Term	Definition
CCW	Counter Clockwise
CEC	Critical Equipment Contactor
CH	Channel
CW	Clockwise
DAU	Data Acquisition Unit
Db	Decibels
ECU	Environmental Control Unit
EHB	Engineering Handbook
ESD	Electrostatic Discharge
EQ	Equipment
HV	High Voltage
HVAC	Heat, Ventilation, and Air Conditioning
IAW	In Accordance With
KS	Key Switch
LED	Light Emitting Diode
LRU	Line Replaceable Unit
MBB	Maintenance Bypass Breaker
MBM	Maintenance Bypass Module
MIS	Maintenance Isolation Breaker
MLOS	Microwave Line of Sight
NA	Not Available
NEXRAD	Next Generation Weather Radar
NWS	National Weather Service
PDP	Power Distribution Panel

Acronym or Non−Standard Term	Definition
PHA	Phase A
PHB	Phase B
PHC	Phase C
PMC	Preventive Maintenance Card
RBDDS	Remote Base Data Distribution System
RDA	Radar Data Acquisition
RDADP	Radar Data Acquisition Data Processor
RDASC	Radar Data Acquisition Status and Controls
RF	Radio Frequency
RPG	Radar Product Generation
RPIE	Real Property Installed Equipment
RRRAT	RDA/RPG Remote Access Terminal
RST	Reset
SAE	Society of Automotive Engineers
SCM	Supervisory Contact Module
SH	Shelter
SHEL	Shelter
SMPL	Sample
SSP	Standard Shop Practice
TEMP	Temperature
TPMS	Transition Power Maintenance Shelter
TPS	Transition Power Source
TRANS	Transmitter
TS	Tamper Switch
UD	Unit Designation
UTIL	Utility

Acronym or Non−Standard Term	Definition
UIB	Unit Input Breaker
UOB	Unit Output Breaker
VSM	Voltage Sensing Module
VSR	Voltage Sensing Relay
VSWR	Voltage Standard Wave Ratio
WSR	Weather Surveillance Radar
XFER	Transfer
XMTR	Transmitter