NWS EHB 6–500
AF TO 31P1–4–108–1
FAA TI 6345.1 V1
NAVY EM400–AA–MMM–010/WSR–88D

REVISION 4

TECHNICAL MANUAL

SYSTEM DESCRIPTION

DOPPLER METEOROLOGICAL RADAR WSR–88D

UNISYS CORPORATION
CONTRACT 50–DMNW–8–00032

Distribution Statement A – Approved for public release; distribution is unlimited.

PUBLISHED UNDER AUTHORITY OF THE SECRETARIES OF
COMMERCE, THE AIR FORCE, THE NAVY, AND TRANSPORTATION

31 MARCH 2003
CHANGE 1 – 15 APRIL 2004

LIST OF EFFECTIVE PAGES

INSERT LATEST CHANGED PAGES, DESTROY SUPERCEDED PAGES.

NOTE: The portion of the text affected by the changes is indicated by a vertical line in the outer margins of the page. Minor changes to illustrations are indicated by a miniature pointing hand. Extensive illustration changes and new illustrations do not have the miniature pointing hands.

Dates of issue for original and changed pages are:

Original . . . . . 0 . . . . . 31 March 2003
Change . . . . . 1 . . . . . 15 April 2004

TOTAL NUMBER OF PAGES IN THIS MANUAL IS 416 CONSISTING OF THE FOLLOWING:

Page No.	*Change No.
Title Page	**1**
A	**1**
B	**1**
C blank	**1**
i – xxvi	**1**
1–1 – 1–2	0
1–3	**1**
1–4 – 1–6	0
1–7	**1**
1–8	0
1–9 – 10	**1**
1–11 – 1–16	0
1–17	**1**
1–18 – 1–19	0
1–20– 1–24	**1**
1–25 – 1–33	0
1–34	**1**
1–35 – 1–39	0
1–40	**1**
1–41 – 1–48	0
1–49	**1**
1–50 – 1–52	0
1–53	**1**
1–54 – 1–76	0
1–77	**1**
1–78	0
1–79 – 1–81	**1**
1–82 – 1–99	0
1–100	**1**
1–101 – 1–112	0
1–113 – 1–116	**1**
1–117 – 1–121	0
1–122	**1**
1–123 – 1–139	0
1–140 – 1–142	**1**
1–143 – 1–145	0
1–146 – 1–154	**1**
FP–1–1	0
FP–1–2 blank	0
FP–1–3	0
FP–1–4 blank	0
FP–1–5	0
FP–1–6 blank	0
FP–1–7	**1**
FP–1–8 blank	**1**
FP–1–9	**1**
FP–1–10 blank	**1**
FP–1–11	0
FP–1–12 blank	0
FP–1–13	**1**
FP–1–14 blank	**1**
2–1	0
2–2 blank	0
3–1 – 3–14	0
3–15 – 3–18	**1**
3–19 – 3–28	0
3–29	**1**
3–30 – 3–39	0
3–40 – 3–44.1	**1**
3–44.2 blank	**1**
3–45 – 3–57	0
3–58 – 3–59	**1**
3–60 – 3–88	0
3–89	**1**
3–90 – 3–106	0
FP–3–1	**1**
FP–3–2 blank	**1**
FP–3–3	0
FP–3–4 blank	0
FP–3–5	0
FP–3–6 blank	0
FP–3–7	0
FP–3–8 blank	0
FP–3–9	0
FP–3–10 blank	0
FP–3–11	0
FP–3–12 blank	0
FP–3–13	0
FP–3–14 blank	0
FP–3–15	0
FP–3–16 blank	0
FP–3–17	**1**
FP–3–18 blank	**1**
FP–3–19	**1**
FP–3–20 blank	**1**
FP–3–21	0
FP–3–22 blank	0
FP–3–23	0
FP–3–24 blank	0
FP–3–25	0
FP–3–26 blank	0
FP–3–27	0
FP–3–28 blank	0
FP–3–29	0
FP–3–30 blank	0
FP–3–31	0
FP–3–32 blank	0

* Zero in this column indicates an original page.

LIST OF EFFECTIVE PAGES

INSERT LATEST CHANGED PAGES, DESTROY SUPERCEDED PAGES.

NOTE: The portion of the text affected by the changes is indicated by a vertical line in the outer margins of the page. Minor changes to illustrations are indicated by a miniature pointing hand. Extensive illustration changes and new illustrations do not have the miniature pointing hands.

Page No.	*Change No.
FP–3–33	0
FP–3–34 blank	0
FP–3–35	0
FP–3–36 blank	0
FP–3–37	0
FP–3–38 blank	0
FP–3–39	**1**
FP–3–40 blank	**1**
FP–3–41	**1**
FP–3–42 blank	**1**
FP–3–43	0
FP–3–44 blank	0
FP–3–45	0
FP–3–46 blank	0
FP–3–47	0
FP–3–48 blank	0
FP–3–49	0
FP–3–50 blank	0
FP–3–51	0
FP–3–52 blank	0
A–1	0
A–2 blank	0
B–1 – B–6	0
Index 1 – Index 6	0
Index 7 – Index 31	**1**
Index 32 – Index 34	0
Glossary 1 – 12	0
Glossary 13	**1**
Glossary 14 – 17	0
Glossary 18 blank	0

* Zero in this column indicates an original page.

TABLE OF CONTENTS

Paragraph	Title	Page
LIST OF ILLUSTRATIONS		xiv
LIST OF TABLES		xvi
FOREWORD		xvii
SAFETY SUMMARY		xviii
Chapter 1	**GENERAL INFORMATION**	**1–1**
Section 1–1.	Purpose and Description	1–2
1–1.1	INTRODUCTION.	1–2
1–1.2	PURPOSE.	1–2
1–1.2.1	Configuration	1–2
1–1.2.1.1	Radar Data Acquisition (RDA) Group	1–2
1–1.2.1.2	Wideband Communications (WBC) Group	1–2
1–1.2.1.3	Radar Product Generation (RPG) Group	1–3
1–1.2.1.4	Master System Control Function (MSCF) Group	1–3
1–1.2.1.5	Principal User Systems	1–3
1–1.2.1.6	Real Property Installed Equipment (RPIE) Group	1–4
1–1.2.2	Meteorological Products	1–4
1–1.2.2.1	Base Products	1–4
1–1.2.2.2	Derived Products	1–4
1–1.2.2.3	Alphanumeric Products	1–5
1–1.2.2.4	Data Array Products	1–5
1–1.2.3	Principal Users	1–5
1–1.3	DESCRIPTION.	1–6
1–1.3.1	RDA Group	1–6
1–1.3.2	WBC Group	1–6
1–1.3.3	RPG Group	1–7
1–1.3.3.1	RPG Processor/Communications Assembly Cabinet	1–7
1–1.3.3.2	Remote RDA Maintenance Terminal	1–7
1–1.3.4	MSCF Group	1–7
1–1.3.5	PUP Group	1–7
1–1.3.5.1	PUP Data Processor Cabinet	1–8
1–1.3.5.2	PUP Workstation	1–8
1–1.3.5.3	PUP System Console	1–8
1–1.3.6	RPIE Group	1–8
1–1.3.7	External Principal Users	1–8
1–1.4	OPERATION.	1–8
1–1.4.1	Program Control	1–8

Paragraph	Title	Page
1–1.4.1.1	RDA Hardwired Signal Processor (HSP)	1–8
1–1.4.1.2	RDA Programmable Signal Processor (PSP)	1–8
1–1.4.1.3	RDA Status and Control Processor	1–9
1–1.4.1.4	RPG Product Generation Processor	1–9
1–1.4.1.5	PUP Display Processor	1–9
1–1.4.1.6	PUP Graphics Processor	1–9
1–1.4.2	User Control	1–9
1–1.4.2.1	RDA Maintenance Terminal	1–9
1–1.4.2.2	MSCF	1–9
1–1.4.2.3	Remote RDA Maintenance Terminal	1–10
1–1.4.2.4	PUP Workstation	1–10
Section 1–2.	Leading Particulars	1–12
1–2.1	INTRODUCTION.	1–12
1–2.2	WSR–88D CONFIGURATIONS.	1–12
1–2.3	EQUIPMENT LOCATIONS.	1–16
1–2.4	PHYSICAL CHARACTERISTICS.	1–16
Section 1–3.	Capabilities and Limitations	1–52
1–3.1	INTRODUCTION.	1–52
1–3.2	WSR–88D SYSTEM CAPABILITIES.	1–52
1–3.2.1	Operational Modes	1–52
1–3.2.1.1	Precipitation Mode	1–52
1–3.2.1.2	Clear Air Mode	1–52
1–3.2.1.3	Scan Strategies	1–52
1–3.2.1.4	Pulse Waveform Patterns	1–52
1–3.2.2	System Capability Summary	1–53
1–3.2.3	System Configuration	1–53
1–3.2.4	System Expandability	1–53
1–3.2.4.1	RDA Expandability	1–54
1–3.2.4.2	RPG Expandability	1–54
1–3.2.4.3	PUP Expandability	1–54
1–3.2.5	System Maintenance Concept	1–54
1–3.2.6	System Calibration	1–54
1–3.3	RDA GROUP CAPABILITIES.	1–54
1–3.3.1	RDA Functions	1–54
1–3.3.2	RDA Performance Capabilities Summary	1–69
1–3.3.3	RDA Control Features	1–69
1–3.3.4	RDA Monitoring and Error Detection	1–69
1–3.3.5	RDA Calibration	1–69
1–3.3.6	RDA Archiving	1–69

Paragraph	Title	Page
1–3.3.6.1	Metadata	1–70
1–3.3.7	RDA Redundancy	1–70
1–3.4	WBC GROUP CAPABILITIES.	1–73
1–3.4.1	Hardwire	1–73
1–3.4.2	MLOS	1–73
1–3.4.3	Private T1	1–73
1–3.4.4	TELCO T1	1–73
1–3.5	RPG GROUP CAPABILITIES.	1–75
1–3.5.1	RPG Functions	1–75
1–3.5.2	RPG Performance Capabilities	1–76
1–3.5.3	RPG Functional Capabilities	1–76
1–3.5.3.1	RPG Product Generation	1–76
1–3.5.3.2	RPG Product Storage	1–76
1–3.5.3.3	RPG Product Distribution	1–76
1–3.5.3.4	RPG Control Capabilities	1–76
1–3.5.3.5	RPG Status Monitoring and Error Detection	1–77
1–3.5.3.6	RPG Archiving	1–77
1–3.5.3.7	RPG Hydrometeorological Processing	1–78
1–3.5.3.8	RPG Alert Processing	1–78
1–3.5.3.9	RPG Redundancy	1–78
1–3.6	MSCF GROUP CAPABILITIES.	1–79
1–3.6.1	MSCF Functions	1–79
1–3.6.1.1	Local MSCF	1–80
1–3.6.1.2	Distant MSCF	1–80
1–3.6.2	MSCF Performance Capabilities	1–80
1–3.7	PUP GROUP CAPABILITIES.	1–81
1–3.7.1	PUP Functions	1–81
1–3.7.2	PUP Performance Capabilities	1–81
1–3.7.3	PUP Functional Capabilities	1–82
1–3.7.3.1	PUP Product Request	1–82
1–3.7.3.2	PUP Product Display	1–82
1–3.7.3.3	PUP Local Product Storage	1–83
1–3.7.3.4	PUP Product Annotation and Distribution	1–83
1–3.7.3.5	PUP Control	1–83
1–3.7.3.6	PUP Status Monitoring	1–83
1–3.7.3.7	PUP Archiving	1–84
1–3.7.4	Federal Aviation Administration Application	1–84

Section 1–4. Equipment Reference Data 1–89

1–4.1	INTRODUCTION.	1–89
1–4.2	EQUIPMENT SUPPLIED AND VARIATIONS.	1–89
1–4.3	STANDARD TOOLS AND TEST EQUIPMENT	1–89

Paragraph	Title	Page
1–4.4	SPECIAL TOOLS AND TEST EQUIPMENT LIST.	1–89
1–4.5	CONSUMABLES/EXPENDABLES.	1–89
1–4.6	COMPUTER PROGRAMS SUPPLIED.	1–89
1–4.7	TECHNICAL MANUALS.	1–89
1–4.7.1	System Manual	1–90
1–4.7.2	RPG/PUP Operator's Manuals	1–90
1–4.7.3	PM Workcard Set	1–90
1–4.7.4	RDA Maintenance Manual Set	1–90
1–4.7.5	WBC Maintenance Manual Set	1–91
1–4.7.6	RPG Maintenance Manual Set	1–91
1–4.7.7	PUP Maintenance Manual Set	1–91
1–4.7.8	RPIE Maintenance Manual Set	1–91
1–4.7.9	Equipment Manuals	1–91
1–4.7.10	Illustrated Parts Breakdown (IPB) Manual	1–91
1–4.7.11	Work Unit Code (WUC) Manual	1–91
Section 1–5.	RPG and MSCF System Security	1–151
1–5.1	INTRODUCTION.	1–151
1–5.2	BACKGROUND.	1–151
1–5.2.1	RPG Group	1–151
1–5.2.2	RPG Function	1–151
1–5.2.3	MSCF Group.	1–151
1–5.2.3.1	Local MSCF	1–152
1–5.2.3.2	Distant MSCF	1–152
1–5.2.4	MSCF Function	1–152
1–5.3	SYSTEM SECURITY.	1–152
1–5.3.1	NEXRAD Security Plan	1–152
1–5.3.1.1	RPG and MSCF Access To Users	1–152
1–5.3.1.2	RPG Availability	1–152
1–5.3.1.3	System Integrity	1–153
1–5.3.1.4	Accountability	1–153
1–5.3.2	Security Management	1–154
1–5.3.2.1	Personnel Security	1–154
1–5.3.3	Physical Security	1–154
1–5.3.3.1	Resource Protection	1–154
Chapter 2	**NOT APPLICABLE TO THIS MANUAL**	**2–1**
Chapter 3	**THEORY OF OPERATION**	**3–1**
Section 3–1.	Functional System Overview	3–2
3–1.1	INTRODUCTION	3–2

Paragraph	Title	Page
3–1.2	RADAR DATA ACQUISITION GROUP.	3–2
3–1.2.1	RDA	3–2
3–1.2.1.1	Transmitting Function	3–2
3–1.2.1.2	Antenna Function	3–3
3–1.2.1.3	Antenna Positioning Function	3–3
3–1.2.1.4	Receiver Function	3–3
3–1.2.1.5	Signal Processing Function	3–3
3–1.2.1.6	RDASC Processing Function	3–4
3–1.2.1.7	RDASOT for Redundant Configurations	3–7
3–1.2.1.8	Status and Command Interface Function	3–8
3–1.2.1.9	VMEbus Interface Function	3–8
3–1.3	WIDEBAND COMMUNICATION GROUP.	3–8
3–1.3.1	Wideband Communications Link	3–8
3–1.3.2	Hardwired WBC Function	3–9
3–1.3.3	Private T1 Link	3–9
3–1.3.4	TELCO T1 Link	3–9
3–1.3.5	RDA MLOS WBC Function	3–9
3–1.3.6	RPG MLOS WBC Function	3–9
3–1.4	RPG GROUP.	3–10
3–1.4.1	RPG Data Processing Function	3–10
3–1.4.1.1	RPG Product Generation Processor	3–10
3–1.4.1.2	Archive III Function	3–14
3–1.4.1.3	Local Area Network	3–14
3–1.4.2	Communications Interfaces	3–14
3–1.4.2.1	Point–to–Point Communications Interfaces	3–14
3–1.4.2.2	LAN Communication Interfaces	3–14
3–1.4.2.3	WAN Communications Interfaces	3–15
3–1.4.2.4	Narrowband Communications	3–15
3–1.4.3	Relay Box	3–15
3–1.4.4	Remote RDA Maintenance Terminal	3–15
3–1.5	MSCF GROUP.	3–16
3–1.5.1	MSCF Function	3–16
3–1.5.1.1	MSCF Monitor and Control Function	3–16
3–1.5.1.2	MSCF Equipment	3–16
3–1.5.1.3	Local MSCF Function	3–16
3–1.5.1.4	Distant MSCF Function	3–16
3–1.6	PUP GROUP.	3–17
3–1.6.1	Narrowband Communications Function	3–17
3–1.6.2	VMEbus Interface Function	3–18
3–1.6.3	Display Processing Function	3–18
3–1.6.3.1	Display Processor	3–18

Paragraph	Title	Page
3–1.6.3.2	Data Storage Assemblies	3–19
3–1.6.4	Graphics Processing Function	3–19
3–1.6.4.1	Graphics Processor	3–19
3–1.6.5	PUP Workstation Function	3–19
3–1.6.5.1	Normal PUP Workstation Function	3–19
3–1.6.5.2	PUP Workstation Extension Function	3–20
3–1.7	RPIE GROUP.	3–20
3–1.7.1	Generator Shelter	3–20
3–1.7.1.1	Power Distribution and Lighting Function	3–20
3–1.7.1.2	Heating, Ventilating, and Air Conditioning Function	3–22
3–1.7.1.3	Fire Detection and Suppression Function	3–22
3–1.7.1.4	Security and Status Monitoring Function	3–22
3–1.7.2	Radar Equipment Shelter	3–23
3–1.7.2.1	Power Distribution and Lighting Function	3–23
3–1.7.2.2	Heating, Ventilating, and Air Conditioning Function	3–23
3–1.7.2.3	Fire Detection and Suppression Function	3–23
3–1.7.2.4	Security and Status Monitoring Function	3–23
3–1.7.3	Radar Tower and Radome	3–23
3–1.7.3.1	Power Distribution and Lighting Function	3–23
3–1.7.3.2	Heating, Ventilating, and Air Conditioning Function	3–23
3–1.7.3.3	Fire Detection and Suppression Function	3–23
3–1.7.3.4	Security and Status Monitoring Function	3–24
3–1.7.4	MLOS Shelter	3–24
3–1.7.4.1	Power Distribution and Lighting Function	3–24
3–1.7.4.2	Heating, Ventilating, and Air Conditioning Function	3–24
3–1.7.4.3	Fire Detection and Suppression Function	3–24
3–1.7.4.4	Security and Status Monitoring Function	3–24
3–1.7.5	Transition Power Maintenance Shelter	3–24
3–1.7.5.1	Power Distribution and Lighting Function	3–25
3–1.7.5.2	Heating, Ventilating, and Air Conditioning Function	3–25
3–1.7.5.3	Security and Status Monitoring Function	3–26
3–1.7.6	Transition Power Source (UD62)	3–27
3–1.7.6.1	Transition Power Source Power Distribution	3–27
3–1.7.6.2	Transition Power Source Cooling	3–28
3–1.7.6.3	Transition Power Source Status Monitoring	3–28
3–1.8	REDUNDANT SYSTEM.	3–28
3–1.8.1	FAA Redundant Systems	3–28
3–1.8.1.1	Pedestal	3–28
3–1.8.1.2	Status and Control	3–29
3–1.8.1.3	Communications	3–29
3–1.8.1.4	FAA Remote Monitoring Subsystem	3–29
3–1.8.2	NWS Redundant System	3–29

Paragraph	Title	Page
3–1.8.2.1	Pedestal	3–29
3–1.8.2.2	Status and Control	3–29
3–1.8.2.3	Communications	3–29
Section 3–2.	Functional System Operation	3–30
3–2.1	INTRODUCTION.	3–30
3–2.2	RDA GROUP.	3–30
3–2.2.1	Waveguide Components (UD1/UD7)	3–30
3–2.2.2	Antenna/Pedestal (UD2)	3–31
3–2.2.2.1	Pedestal Assembly (UD2A1)	3–31
3–2.2.2.2	Antenna/Feed Assembly (UD2A2)	3–31
3–2.2.2.3	Receiver Front End (UD2A3/A4)	3–31
3–2.2.2.4	Power Monitor (UD2A5)	3–31
3–2.2.3	Radar Transmitter (UD3)	3–31
3–2.2.4	Radar Receiver (UD4)	3–32
3–2.2.4.1	Test Source Select Function	3–32
3–2.2.4.2	Master Signal Generator Function	3–32
3–2.2.4.3	Receiver Fault Isolation Function	3–32
3–2.2.5	RDADP Cabinet (UD5)	3–32
3–2.2.5.1	FAA and NWS Redundant RDADP Cabinets (UD5 and UD105)	3–32
3–2.2.5.2	Versa Module Eurocard Chassis (UD5A1)	3–33
3–2.2.5.3	RDA Maintenance Panel (UD5A2)	3–33
3–2.2.5.4	DAU (UD5A3)	3–34
3–2.2.5.5	RDA Maintenance Terminal (UD5A4)	3–34
3–2.2.5.6	Small Computer System Interface Assembly (UD5A5)	3–34
3–2.2.5.7	Power Amplifier (UD5A7)	3–34
3–2.2.5.8	Digital Control Unit (UD5A6)	3–34
3–2.2.5.9	Programmable Signal Processor (UD5A9)	3–35
3–2.2.5.10	Hardwired Signal Processor (UD5A10)	3–35
3–2.2.5.11	RDASC M3200 Processor Assembly (UD5A12)	3–35
3–2.2.5.12	A/B Switch (UD5A17)	3–35
3–2.2.5.13	Channel Service Unit (UD5A18)	3–36
3–2.2.5.14	Power Supplies and Subsystems	3–36
3–2.2.5.15	Automatic A/B Wideband Communication Switch (UD5A19)	3–36
3–2.2.6	Waveguide Pressurization Unit (UD6)	3–36
3–2.2.7	Archive II Unit (UD16)	3–36
3–2.3	WBC GROUP.	3–36
3–2.3.1	Hardwired WBC	3–36
3–2.3.2	MLOS WBC	3–36
3–2.3.2.1	MLOS Radio Cabinets (UD19 and UD39)	3–36
3–2.3.2.2	MLOS Antennas	3–39
3–2.3.3	Private or TELCO T1 WBC	3–39

Paragraph	Title	Page
3–2.4	RPG GROUP.	3–39
3–2.4.1	RPG Processor/Communications Assembly Cabinet (UD70)	3–39
3–2.4.1.1	Base Data Distribution Server Processor (UD70A1)	3–40
3–2.4.1.2	Router (UD70A2)	3–40
3–2.4.1.3	Keyboard, Video, Mouse Switch (UD70A3)	3–40
3–2.4.1.4	17–Inch Monitor (UD70A4)	3–40
3–2.4.1.5	Keyboard, and Mouse (UD70A5 and UD70A6)	3–40
3–2.4.1.6	RPG Processor (UD70A7)	3–41
3–2.4.1.7	Archive Storage Devices (UD70A8 and UD70A9)	3–41
3–2.4.1.8	Power Administrator Master Switch (UD70A10)	3–41
3–2.4.1.9	Uninterruptible Power Supply (UD70A11)	3–41
3–2.4.1.10	RDA/RPG Gateway (UD70A12)	3–41
3–2.4.1.11	Local Area Network (UD70A13)	3–41
3–2.4.1.12	Dedicated/Dial Modem Rack Assembly (UD70A14)	3–41
3–2.4.1.13	Communication Server (UD70A15, A16, A17)	3–41
3–2.4.1.14	Channel Service Unit (CSU) (UD70A18) (NWS Only).	3–41
3–2.4.1.15	Short–Haul Modem (UD70A19)	3–42
3–2.4.1.16	RS–232/RS–422 Converter (UD70A20)	3–42
3–2.4.1.17	Power Distribution Panel (UD70A22)	3–42
3–2.4.1.18	Dial Patch Panel (UD70A23)	3–42
3–2.4.1.19	Dial Adapter Panel (UD70A24)	3–42
3–2.4.1.20	Dedicated Adapter Panel (UD70A25)	3–42
3–2.4.1.21	Dedicated Patch Panel (UD70A26, UD70A27)	3–42
3–2.4.1.22	RMS Power Administrators (UD70A28 and UD70A29)	3–42
3–2.4.2	Remote BDDS Equipment (UD72, UD73, and UD74)	3–42
3–2.4.2.1	Remote BDDS Processor (UD72A1)	3–43
3–2.4.2.2	Remote LAN Switch (UD73)	3–43
3–2.4.2.3	Remote Router (UD74A1)	3–43
3–2.4.3	Relay Box (UD31)	3–43
3–2.4.4	Remote RDA Maintenance Terminal (UD32)	3–43
3–2.5	MSCF GROUP.	3–43
3–2.5.1	Master System Control Function (UD71)	3–43
3–2.5.1.1	MSCF Systems	3–44
3–2.5.1.2	Dedicated–Port Modem (UD71A5)	3–44
3–2.5.1.3	Backup Storage Device (UD71A6)	3–44
3–2.5.1.4	Color Printer (UD79A1)	3–44
3–2.5.1.5	Frame Relay Hub Router (UD75A1)	3–44
3–2.6	PUP GROUP.	3–44.1
3–2.6.1	PUP Data Processor Cabinet (UD41)	3–44.1
3–2.6.1.1	Display Processor	3–45
3–2.6.1.2	Narrowband Communication Equipment	3–45
3–2.6.1.3	PUP Data Processor Cabinet	3–45

3–2.6.2	PUP Workstation	3–48
3–2.6.2.1	Application Terminal (UD43)	3–48
3–2.6.2.2	Graphics Tablet (UD44)	3–48
3–2.6.2.3	Color Graphics Display (UD45A1, and A2)	3–48
3–2.6.2.4	Limited Distance Modems (UD45A3–A5)	3–49
3–2.6.2.5	Audible Alarm (UD46)	3–49
3–2.6.2.6	Color Graphics Printer (UD47)	3–49
3–2.6.2.7	RGBS Line Drivers/Equalizers (UD48/UD51)	3–49
3–2.6.3	System Console (UD42)	3–49
3–2.7	RPIE GROUP.	3–50
3–2.7.1	Radar Equipment Shelter Assembly (UD1)	3–50
3–2.7.1.1	Power Distribution and Lighting	3–50
3–2.7.1.2	Heating, Ventilating, and Air Conditioning	3–54
3–2.7.1.3	Fire Detection and Suppression	3–54
3–2.7.1.4	Security and Status Monitoring	3–54
3–2.7.2	MLOS Shelter Assembly (UD8)	3–55
3–2.7.2.1	Power Distribution and Lighting	3–55
3–2.7.2.2	Heating, Ventilating, and Air Conditioning	3–55
3–2.7.2.3	Fire Detection and Suppression	3–55
3–2.7.2.4	Security and Status Monitoring	3–56
3–2.7.3	Generator Shelter (UD10)	3–56
3–2.7.3.1	Power Distribution and Lighting	3–56
3–2.7.3.2	Heating, Ventilating, and Air Conditioning	3–58
3–2.7.3.3	Fire Detection and Suppression	3–58
3–2.7.3.4	Security and Status Monitoring	3–58
3–2.7.4	Radar Tower (UD11) and Radome (UD12)	3–58
3–2.7.4.1	Power Distribution and Lighting	3–58
3–2.7.4.2	Heating, Ventilating, and Air Conditioning	3–58
3–2.7.4.3	Fire Detection and Suppression	3–59
3–2.7.4.4	Security and Status Monitoring	3–59
3–2.7.5	MLOS Towers (UD20 and UD40)	3–59
3–2.7.5.1	Guyed MLOS Tower	3–59
3–2.7.5.2	Self–Supporting MLOS Tower	3–59
3–2.7.6	Transition Power Maintenance Shelter (UD60)	3–59
3–2.7.6.1	Power Distribution and Lighting	3–59
3–2.7.6.2	Heating, Ventilating, and Air Conditioning	3–60
3–2.7.6.3	Security and Status Monitoring	3–62
3–2.7.7	Transition Power Source (UD62)	3–62
3–2.7.8	Transition Power Source Operating Modes	3–63
3–2.7.8.1	Normal Mode	3–63
3–2.7.8.2	Battery Mode	3–63
3–2.7.8.3	Shutdown	3–64
3–2.7.8.4	Bypass Mode	3–64
3–2.7.8.5	Maintenance Bypass	3–65

Paragraph	Title	Page
3–2.7.9	Transition Power Source Control Panel	3–65
3–2.7.9.1	Maintenance Bypass	3–66
3–2.7.10	Transition Power Source External Controls and Indicators	3–69
3–2.7.10.2	System Alarms	3–81
3–2.7.11	Transition Power Source Electrical Power Distribution	3–82
3–2.8	REDUNDANT SYSTEM.	3–87
3–2.8.1	Redundant RDAs	3–87
3–2.8.1.1	Waveguide Components (UD1/UD7)	3–87
3–2.8.1.2	Antenna/Pedestal (UD2)	3–87
3–2.8.1.3	Radar Transmitters UD3 and UD103	3–88
3–2.8.1.4	Radar Receivers (UD4 and UD104)	3–88
3–2.8.1.5	FAA Redundant RDADP Cabinets (UD5 and UD105)	3–88
3–2.8.1.6	NWS Redundant RDADP Cabinets (UD5 and UD105)	3–88
3–2.8.1.7	Remote RDA Maintenance Terminal	3–88
3–2.8.2	FAA Redundant RPGs	3–88
3–2.8.2.1	RPG Interprocessor Link	3–89
3–2.8.2.2	Distant MSCF	3–89
3–2.8.2.3	Relay Box	3–89
Section 3–3.	Functional Program Operation	3–90
3–3.1	INTRODUCTION.	3–90
3–3.2	GENERAL INFORMATION.	3–90
3–3.2.1	RDA	3–90
3–3.2.2	RPG	3–90
3–3.2.3	MSCF.	3–90
3–3.2.4	PUP	3–90
3–3.3	PROCESSOR INTERRELATIONSHIPS.	3–90
3–3.3.1	HSP	3–91
3–3.3.2	PSP	3–91
3–3.3.3	RDASC Processor	3–91
3–3.3.4	RPG Processor	3–91
3–3.3.5	MSCF Processor	3–91
3–3.3.6	PUP Display Processor	3–92
3–3.3.7	Graphics Processor	3–92
3–3.4	HSP FUNCTIONS.	3–92
3–3.5	RDA PSP SOFTWARE PROGRAM.	3–92
3–3.5.1	PSP Major Events	3–92
3–3.5.1.1	Power Turn On	3–92
3–3.5.1.2	Initialization	3–93
3–3.5.1.3	Start Elevation Layer	3–93
3–3.5.1.4	Radials	3–93
3–3.5.2	PSP Processing Modes	3–93

Paragraph	Title	Page
3–3.5.2.1	Contiguous Surveillance Waveforms	3–93
3–3.5.2.2	Contiguous Doppler Waveforms with Range Ambiguity Resolution	3–93
3–3.5.2.3	Contiguous Doppler Waveforms without Range Ambiguity Resolution	3–93
3–3.5.2.4	Batch Waveforms	3–93
3–3.5.3	Signal Processing Modes	3–93
3–3.5.3.1	Process Surveillance Time–Series	3–93
3–3.5.3.2	Process Range–Ambiguous Doppler Time–Series	3–94
3–3.5.3.3	Process Doppler Time–Series	3–94
3–3.5.3.4	Process Batch Time–Series	3–94
3–3.5.3.5	Measure Bias and Noise Power	3–94
3–3.5.3.6	Measure Gain and Balance	3–94
3–3.5.3.7	Collect Input Data	3–94
3–3.5.3.8	Initialize PSP	3–94
3–3.6	RDASC PROCESSOR SOFTWARE PROGRAM.	3–94
3–3.6.1	Handle Maintenance Terminal	3–95
3–3.6.2	Monitor and Calibrate RDA	3–95
3–3.6.3	Form RDA Data	3–95
3–3.6.4	Handle Wideband Data	3–96
3–3.6.4.1	Handle Wideband Link Function	3–96
3–3.6.4.2	Transmit Wideband Data Function	3–96
3–3.6.4.3	Receive Wideband Data Function	3–96
3–3.6.5	Control RDA	3–96
3–3.6.6	Control Signal Processor	3–97
3–3.6.7	Control Pedestal	3–97
3–3.6.8	Handle Remote Monitoring System	3–97
3–3.6.8.1	Processing	3–97
3–3.6.8.2	Handle RMS Link	3–97
3–3.6.8.3	Transmit RMS Data	3–98
3–3.6.8.4	Receive RMS Data	3–98
3–3.6.8.5	Handle RMS Commands and Data Requests	3–98
3–3.6.9	Handle RDA Interprocessor Link	3–98
3–3.7	RPG SOFTWARE PROGRAM.	3–99
3–3.7.1	Acquire Radar Data	3–99
3–3.7.2	Generate Products	3–100
3–3.7.2.1	Base Products	3–100
3–3.7.2.2	Derived Products	3–100
3–3.7.2.3	Alphanumeric Products	3–101
3–3.7.3	Distribute Products	3–101
3–3.7.3.1	Store/Retrieve Products	3–101
3–3.7.3.2	Transform Products	3–101
3–3.7.3.3	Handle Communications	3–101
3–3.7.4	Control System	3–101

Paragraph	Title	Page
3–3.7.4.1	Unit Control	3–101
3–3.7.4.2	System Monitor	3–101
3–3.7.4.3	Processing Control	3–102
3–3.8	PUP DISPLAY PROCESSOR SOFTWARE PROGRAM.	3–102
3–3.8.1	Interface with Operator/Trainee	3–102
3–3.8.2	Monitor System Performance	3–102
3–3.8.3	Process Weather Products	3–102
3–3.8.3.1	Handle Communications	3–102
3–3.8.3.2	Annotate Weather Products	3–102
3–3.8.3.3	Form Weather Products	3–102
3–3.8.3.4	Store/Retrieve Weather Data	3–102
3–3.8.4	Display	3–102
3–3.8.4.1	Graphics Processor	3–102
3–3.8.4.2	Alphanumeric Terminal	3–103
3–3.8.4.3	Audible Alert	3–103
3–3.9	GRAPHICS DISPLAY PROCESSOR SOFTWARE PROGRAM.	3–103
3–3.9.1	Graphics Display Processor Program	3–103
3–3.9.1.1	Primitives	3–103
3–3.9.1.2	Attributes	3–104
3–3.9.1.3	Coordinate Transformations	3–104
3–3.9.1.4	Video Functions	3–104
3–3.9.1.5	Cursors, Graphics Tablet and Color Printer	3–104
3–3.9.2	Graphics System Device Driver	3–104

Section 3–4. Functional Operation of Electronic Circuits 3–105

Section 3–5. Functional Operation of Mechanical Assemblies 3–106

OPERATIONAL INFORMATION A–1

Section A–1. General Information A–1

MAINTENANCE APPROACH B–1

Section B–1. General Information B–1

Section B–2. Maintenance Approach B–2

B–2.1	INTRODUCTION.	B–2
B–2.2	ON–EQUIPMENT MAINTENANCE.	B–2
B–2.3	DEPOT (OFF–EQUIPMENT) MAINTENANCE.	B–2
B–2.4	ON–SITE SPARES.	B–2

Paragraph	Title	Page
B–2.5	REPAIR DEPOT.	B–2
Section B–3.	Periodic Maintenance	B–3
B–3.1	PERIODIC MAINTENANCE.	B–3
Section B–4.	Fault Isolation	B–4
B–4.1	INTRODUCTION.	B–4
B–4.1.1	On–Line Performance Monitoring	B–4
B–4.1.2	Off–Line Primary Fault Isolation	B–4
B–4.1.3	Off–Line Secondary Fault Isolation	B–5
Section B–5.	Component Replacement and Setup Procedures	B–6
B–5.1	INTRODUCTION.	B–6
B–5.1.1	Electro–mechanical Assemblies	B–6
B–5.1.2	Printed Circuit Cards	B–6
B–5.1.3	Peripheral Communication Devices	B–6
INDEX		Index 1
GLOSSARY		Glossary 1

LIST OF ILLUSTRATIONS

Figure	Title	Page
Figure SS–1.	Radiation Hazard Zones	xxvi
Figure 1–1.	Sample WSR–88D Site Configurations (2 Sheets)	1–14
Figure 1–2.	Typical WSR–88D Site Layout (3 Sheets)	1–17
Figure 1–3.	Generator Shelter, Equipment Location Diagram	1–20
Figure 1–4.	Radar Equipment Shelter, Equipment Location Diagram(6 Sheets)	1–21
Figure 1–5.	Radar Tower/Radome, Equipment Location Diagram (2 Sheets)	1–27
Figure 1–6.	RDA/RPG MLOS Shelter, Equipment Location Diagram	1–29
Figure 1–7.	Transition Power Maintenance Shelter (Types 1, 2, and 4), Equipment Location Diagram	1–30
Figure 1–8.	Transition Power Maintenance Shelter (Type 3), Equipment Location Diagram	1–31
Figure 1–9.	Transition Power Maintenance Shelter (Types 5, 7, and 9), Equipment Location Diagram	1–32
Figure 1–10.	Transition Power Maintenance Shelter (Type 6), Equipment Location Diagram	1–33
Figure 1–11.	Typical User Facility PUP, MSCF, and RPG Equipment Locations	1–34
Figure 1–12.	RDA Data Processor Cabinet, Equipment Locations (Front View) (2 Sheets)	1–35
Figure 1–13.	MLOS Radio Cabinet, Equipment Location (2 Sheets)	1–37
Figure 1–14.	RPGPCA Cabinet UD70 (Front View) (2 Sheets)	1–39
Figure 1–15.	PUP Data Processor Cabinet UD41, Front View (2 Sheets)	1–41
Figure FO1–1.	Doppler Meteorological Radar WSR–88D, Pictorial Overview	FP–1–1
Figure FO1–2.	Doppler Meteorological Radar WSR–88D, Simplified Pictorial Functional Flow Diagram (2 Sheets)	FP–1–3
Figure FO1–3.	System Program and Operating Station Interrelationships, Pictorial Flow Diagram	FP–1–7
Figure FO1–4.	Maximum/Minimum Equipment Separation Distances (Cable Lengths), Block Diagram	FP–1–9
Figure FO1–5.	WSR–88D Altitude Coverage versus Range	FP–1–11
Figure FO1–6.	Technical Manual Family Tree	FP–1–13
Figure 3–1.	TPS Monitor Panel	3–69
Figure 3–2.	Parts of the LCD Screen (Typical for Powerware 9315–80 208/208V Unit)	3–70
Figure 3–3.	System Meters Screen (Typical for Powerware 9315–80 208/208V Unit)	3–73
Figure 3–4.	Load Amps Meters Screen	3–74
Figure 3–5.	Event History Log Screen	3–75
Figure 3–6.	Active System Events Screen	3–76
Figure 3–7.	Unit Statistics Screen	3–77

Figure	Title	Page
Figure 3–8.	Mimic Graphics Screen	3–78
Figure 3–9.	Time Setup Screen	3–79
Figure 3–10.	Port Setup Screen	3–80
Figure 3–11.	Simplified One–Line TPMS Electrical Distribution (Type 1, 2, and 4 Shelters)(4 Sheets)	3–83
Figure 3–11.	Simplified One–Line TPMS Electrical Distribution (Type 3 Shelters) (4 Sheets)	3–84
Figure 3–11.	Simplified One–Line TPMS Electrical Distribution (Type 5, 6, and 9 Shelters)(4 Sheets)	3–85
Figure 3–11.	Simplified One–Line TPMS Electrical Distribution (TPS Only and Type 7 Shelters) (4 Sheets)	3–86
Figure FO3–1.	Nonredundant System, Operational Equipment Groups, Simplified Functional Block Diagram (2 Sheet)	FP–3–1
Figure FO3–2.	Real Property Installed Equipment Group, Simplified Functional Block Diagram	FP–3–5
Figure FO3–3.	Redundant System, Operational Equipment Groups, Simplified Functional Block Diagram (3 Sheets)	FP–3–7
Figure FO3–4.	Nonredundant RDA, Functional Block Diagram	FP–3–13
Figure FO3–5.	WBC, Functional Block Diagram	FP–3–15
Figure FO3–6.	RPG (NWS) Functional Block Diagram (2 Sheets)	FP–3–17
Figure FO3–7.	PUP, Functional Block Diagram	FP–3–21
Figure FO3–8.	RPIE, Radar Equipment Shelter, Functional Block Diagram (3 Sheets)	FP–3–23
Figure FO3–9.	RPIE, RDA/RPG MLOS Shelter, Functional Block Diagram	FP–3–29
Figure FO3–10.	RPIE, Generator Shelter, Functional Block Diagram	FP–3–31
Figure FO3–11.	RPIE, Radar Tower and Radome, Functional Block Diagram	FP–3–33
Figure FO3–12.	Redundant RDA, Functional Block Diagram (2 Sheets)	FP–3–35
Figure FO3–13.	RPG (FAA Redundant), Functional Block Diagram (2 Sheets)	FP–3–39
Figure FO3–14.	System Processor Interrelationships, Simplified Block Diagram	FP–3–43
Figure FO3–15.	System Processor Program Data Flow, Simplified Block Diagram (2 Sheets)	FP–3–45
Figure FO3–16.	Transition Power Maintenance, Shelter Types 1, 2, 3, and 4 Functional Flow Diagram	FP–3–49
Figure FO3–17.	Transition Power Maintenance, Shelter Types 5, 6, 7, and 9 Functional Flow Diagram	FP–3–51

LIST OF TABLES

Table	Title	Page
Table 1–1.	Association Categories and Respective Capabilities	1–5
Table 1–2.	RDA Physical Characteristics	1–43
Table 1–3.	WBC Physical Characteristics	1–45
Table 1–4.	RPG Physical Characteristics	1–46
Table 1–5.	MSCF Physical Characteristics	1–49
Table 1–6.	PUP Physical Characteristics	1–50
Table 1–7.	Summary of WSR–88D Functions	1–56
Table 1–8.	Overall WSR–88D Capabilities	1–58
Table 1–9.	WSR–88D Control Capabilities	1–60
Table 1–10.	WSR–88D Response Times	1–63
Table 1–11.	WSR–88D Weather Products	1–65
Table 1–12.	WSR–88D Configurations	1–66
Table 1–13.	Non–Operating and Operating Environmental Conditions	1–67
Table 1–14.	RDA Capabilities	1–71
Table 1–15.	WBC Capabilities	1–74
Table 1–16.	RPG Capabilities	1–79
Table 1–17.	MSCF Capabilities	1–81
Table 1–18.	PUP Capabilities	1–84
Table 1–19.	PUP Graphics Display Control Capabilities	1–87
Table 1–20.	RDA Equipment Supplied and Variations	1–92
Table 1–21.	WBC Equipment Supplied and Variations	1–95
Table 1–22.	RPG Equipment Supplied and Variations	1–96
Table 1–23.	MSCF Equipment Supplied and Variations	1–100
Table 1–24.	PUP Equipment Supplied and Variations	1–101
Table 1–25.	RPIE Equipment Supplied and Variations	1–103
Table 1–26.	Standard Tools List	1–107
Table 1–27.	Standard Test Equipment List	1–117
Table 1–28.	Special Purpose Tools and Fixtures	1–126
Table 1–29.	Consumables/Expendables Matrix	1–133
Table 1–30.	Computer Programs	1–143
Table 1–31.	WSR–88D Technical Manual Sets	1–144
Table 3–1.	Associated User Class Capabilities	3–12
Table 3–2.	RPG Class Capabilities of Several Principal User Systems	3–12
Table 3–3.	MLOS Radio Cabinet, Assembly Correlation	3–38

FOREWORD

This technical manual provides operating and maintenance personnel with a systems description maintenance instructions for the Doppler Meteorological Radar WSR–88D. It describes the purpose, structure, and functions of the WSR–88D and discusses its operating and maintenance concepts. This manual was prepared in accordance with the content requirements of MIL–M–38798B and the format requirements of MIL–M–38784B, as amended by TMCR AF TM–86–01/NEXRAD (June 1987). It consists of three chapters, appendices, an index, and a glossary.

Chapter 1 General Information. This chapter provides an introduction to the Doppler Meteorological Radar WSR–88D. This chapter is subdivided into the following five sections: Purpose and Description, Leading Particulars, Capabilities and Limitations, Equipment Reference Data, and RPG and MSCF System Security.

Chapter 2 Not Used.

Chapter 3 Theory of Operation. This chapter describes the functional operation of the WSR–88D. This chapter is subdivided into the following five sections: Functional System Overview, Functional System Operation, Functional Program Operation, Functional Operation of Electronic Circuits, and Functional Operation of Mechanical Assemblies.

Appendix A. This appendix provides a system–level orientation to WSR–88D operating function and procedures.

Appendix B. This appendix provides a system–level orientation to WSR–88D maintenance functions and procedures.

Index

Glossary

This manual is one of a family of technical manuals which provide various levels of description, operation, maintenance, and logistics information on the WSR–88D. Refer to TO 31–1–141, Basic Electronic Technology and Testing Practices, for any basic electronic technology or testing practice that is not fully described in these documents. The WSR–88D technical manual family is defined and discussed in Chapter 1.

The format of this technical manual is as follows:

- Since sections represent the major content divisions of the chapter or appendix, they are formatted as physically–separate standalone elements.
- Sections are numbered as subdivisions of the chapter or appendix. The section numbering system consists of two digits separated by a hyphen. The first digit indicates the chapter or appendix, the second digit indicates the section. Thus, Section 3–2 represents the second section of Chapter 3.

- Paragraph numbering is by section rather than by chapter. The basic numbering system consists of three digits, where the first two digits identify the section

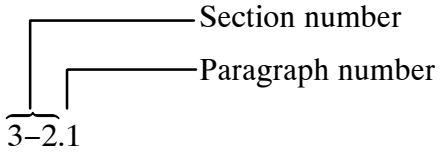

- A decimal paragraph number system is used to identify paragraph subordination

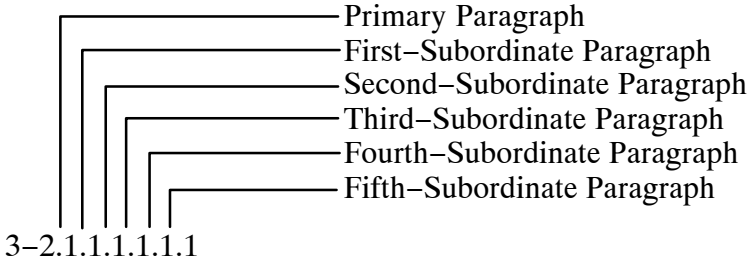

- Pages, tables, and figures are numbered by chapter or appendix. The number consists of two digits separated by a hyphen. The first digit identifies the chapter or appendix. The second digit identifies the page, table, or figure.

- The prefix FO is added to all foldout figure numbers to identify them as foldouts.

SAFETY SUMMARY

1. GENERAL SAFETY.

The following are general safety precautions that are not related to specific procedures and therefore do not appear elsewhere in this publication. These are recommended precautions that personnel must understand and apply during many phases of operation and maintenance.

- KEEP AWAY FROM LIVE CIRCUITS.

Maintenance personnel must at all times observe all safety regulations. Do not replace components or make adjustments inside the equipment with the high voltage supply turned on. Under certain conditions, dangerous potentials may exist when the power control is in the off position, due to charges retained by capacitors. To avoid casualties, always remove power, discharge and ground circuit before touching it.

- DO NOT SERVICE OR ADJUST ALONE.

Under no circumstances should any person reach into or enter an enclosure for the purpose of servicing or adjusting the equipment except in the presence of someone who is capable of rendering aid.

- RESUSCITATION.

Personnel working with or near high voltage should be familiar with modern methods of resuscitation. Such information may be obtained from the American Red Cross or Heart Association. This knowledge may save a life.

- DO NOT WEAR JEWELRY.

Personnel performing maintenance on equipment are not to wear metal frame glasses, watches, rings, necklaces, bracelets, or other jewelry at any time. Electrical arcing can occur when metallic objects are in the proximity of voltage potentials. Jewelry can become entangled or otherwise restrict movement causing severe personal injury.

- ELECTRICAL/ELECTRONIC (GENERAL).

Voltages used in this equipment can cause arcing and may result in severe burns. Avoid contact and remove rings, watches, and other jewelry which may cause personal injury from electrical shock.

- HIGH VOLTAGE (POWER ON).

Avoid contact with high voltage in the equipment, and do not remove safety guards, panels, or covers in the high voltage area. Severe injury or **DEATH** may occur upon contact with or in the proximity of high voltages due to electrical shock.

Personnel will wear non–conductive protective headgear when working in the proximity of energized and exposed circuits which could contact the head.

- HIGH VOLTAGE (POWER OFF).

Avoid contact with the high voltage circuit area. Properly discharge all high voltage capacitors with the grounding rod. Dangerous high voltages exist when power is turned off and will remain until

discharged. Severe injury or **DEATH** may occur upon contact with or in the proximity of high voltages due to electrical shock.

- ROTATING EQUIPMENT.

Stay clear of the antenna dish during rotation. Severe injury or **DEATH** may occur from being crushed by the antenna dish.

- ELEVATED WORK PLATFORM.

Use all handrails, safety chains, safety harnesses, safety rails, and ladders properly while servicing the antenna pedestal and tower. Install all safety equipment and ladders prior to maintenance tasks. Severe injury or **DEATH** may occur from impacting the surface below.

- HOT SURFACES.

Avoid contact with the diesel engine and exhaust pipes during and after engine operation. Contact with hot surfaces can cause skin burns and other injuries reacting to hot surfaces.

- EXPLOSIVE GAS (FUEL).

Clean and remove all fuel spills during engine service with absorbent materials or cloths. Ventilate the area of fuel spills and cleanup. Avoid sparks and open flames in the area. Fumes may accumulate and explode causing severe burns or **DEATH**.

- EXPLOSIVE GAS (BATTERIES).

Service batteries only in a well–ventilated area. Hydrogen and Oxygen gases may accumulate during the charging process. Avoid sparks and open flames near batteries. Severe burns or **DEATH** may occur due to explosion.

- SULFURIC ACID.

Wear protective clothing, face shields, gloves, and aprons when servicing batteries. Severe skin and eye injury may occur upon contact with battery acid. Flush skin and eyes with water immediately and get medical attention.

- CLEANING SOLVENTS (GENERAL).

Wear protective clothing, safety goggles, and gloves when using toxic cleaning solvents. Repeated and prolonged contact may cause skin and eye irritation. Flush skin and eyes with water. Remove clothing saturated with cleaning solvent.

- CLEANING SOLVENTS (INHALATION).

Use cleaning solvents only in a well–ventilated area. Avoid inhalation of cleaning solvents. Asphyxiation or **DEATH** may occur from prolonged exposure to fumes.

- REFRIGERANT (GENERAL).

Wear protective clothing and gloves when servicing air conditioning equipment. Contact with refrigerant–filled pipes and fittings may cause severe skin burn.

- REFRIGERANT (INHALATION).

Avoid inhalation of refrigerant. Breathing refrigerant is hazardous to personnel.

- HEARING LOSS (GENERATOR).

Wear ear protection near the diesel generator set while in operation. Hearing loss can occur from prolonged exposure to high noise.

- HEARING LOSS (TRANSMITTER).

Wear ear protection when transmitter center cabinet door is opened for extended periods or while tuning the klystron. Hearing loss can occur from prolonged exposure to high noise.

- PERFORM WORK EFFICIENTLY.

When working in areas designated as hazardous, perform work in the shortest possible time. Be thoroughly familiar with the procedures required for the task before entering the area.

- MICROWAVE RADIATION PRECAUTIONS.

The WSR–88D generates and detects electromagnetic energy at a transmitted frequency between 2.7 GHz and 3.0 GHz. This non–ionizing radiation is concentrated in the antenna beam. The potential hazard of this radiation to personnel is biological heating. Intense microwave radiation (power densities greater than 300 mW/cm$^{2)}$ can result in biological damage such as the formation of cataracts or other opacities in the eyes and “cooking” internal organs.

Service personnel must comply with the guidelines given in American Standards Institute C.95.1–1982 which state that for unrestrictive exposure to microwave radiation the body energy deposition averaged over the entire body mass for any 0.1 hour period must be kept to less than 144 joules per kilogram (J/kg). This is equivalent to a specific absorption rate (SAR) of 0.4 watts per kilogram. For the WSR–88D frequency band, this corresponds to a power density of 5 mW/cm^2.

Average power densities less than 5 mW/cm^2 are regarded as safe for indefinite exposure. Power densities greater than 5 mW/cm^2 should be regarded as potentially hazardous.

- DIRECT ANTENNA INTO OPEN AREA WHEN TRANSMITTING.

When it is necessary to perform maintenance with power radiating from the antenna, take the necessary steps to keep the antenna directed into open area whenever possible.

- SECURE ALL MATERIAL WHEN NOT IN USE.

Secure all tools, chassis, and covers before operating equipment.

- RESTORE ALL INTERLOCKS.

Restore all interlock switches to normal operating condition immediately upon completion of work on the unit involved.

- DO NOT USE METAL TOOLS NEAR EXPOSED PARTS.

Do not use brushes, brooms, or other tools that have exposed metal parts within four feet of any electrical equipment having exposed current–carrying parts.

- DO NOT USE FERROUS TOOLS OR INSTRUMENTS NEAR KLYSTRONS.

Do not use steel or iron tools near klystrons. Such tools may be pulled from the technicians grasp and cause damage to the tube.

- SOLDERING PRECAUTIONS.

Wear a face shield or safety goggles when soldering.

NOTE

Normal prescription glasses or plain safety glasses may be used in place of safety goggles for light electronic equipment soldering.

Never sling excess solder from a soldering iron; wipe it off with a damp cloth or sponge. Never leave the iron plugged in and unattended. When soldering is being performed, ensure the work area is well ventilated.

- FALLING/SNOW/ICE.

Snow and/or ice may accumulate on the radome and/or tower during inclement weather. This accumulation may fall from the radome/tower onto the shelters and walkways below. Be aware of this condition during the winter months.

2. SPECIFIC SAFETY.

- TOWER SAFETY

To prevent death or severe injury in falling from the tower, the following procedures must be followed:

  - Use hand rails and rest platforms when using the stairs for access to/from Antenna areas
  - Ensure that the Antenna floor hatch is closed and secured at all times when not in use

- ELECTRICAL SHOCK HAZARDS

Prime power voltages and high voltages within cabinets can cause death or severe injury. These voltages are contained in the generator area, the Radar Product Generation (RPG) area, the Radar Data Acquisition (RDA) area, the Antenna area and the Principal User Processing (PUP) area. Warning signs and labels are located on the guards and barriers to alert personnel of the potential hazard. DO NOT DISREGARD THESE WARNINGS. Ensure that safety interlocks, barriers and guards are not bypassed.

In the PUP, the CRT has extremely high voltages present that can cause death or severe injury. Warning labels and interlocks are present to prevent electrical shock. DO NOT BYPASS INTERLOCKS.

The transmitter high voltage can cause death or severe injury. Warning labels and interlocks are present to prevent electrical shock. DO NOT BYPASS INTERLOCK.

- RADIATION HAZARD

Microwave (electromagnetic) radiation exists during the operation of the WSR–88D. A cylindrical volume of 40 ft. diameter and 600 ft. length in front of the antenna reflector has a radiant power density of greater than the ANSI–designated maximum safe level of 5 mW/cm^2. Anything within this volume is subject to unsafe non–ionizing radiation. Unsafe limits are defined as a power density of 5 mW/cm^2 or greater averaged over 6 minutes. During all operational modes, the antenna is scanning continuously and the antenna is always pointed up from the ground by at least 0.5 degrees. Consequently, the ANSI–designated maximum safe power density level of 5 mW/cm^2 is not exceeded anywhere at ground level. However, if the scanning is stopped for any reason with the transmitter energized, this level may be exceeded within the unsafe cylindrical volume as indicated in Figure SS–1. Such a condition must never be induced with the antenna pointing in a direction that could be inhabited by people or stationary animals.

Various safety provisions are built into the equipment to inhibit the radiation if the antenna stops rotating for any reason. If the computer fails, the DAU will time out in 6 seconds and switch the waveguide switch to the dummy load position. The operational software and RDASOT software will automatically inhibit transmission if the pedestal stops rotating for 30 seconds. The RDASOT does allow special override of this provision for a maximum of 5 minutes to run certain tests but these must never be run with the antenna pointing at the ground (below +0.5 degrees).

The lowest level of elevation that may be commanded by the software is –1.0 degrees. Elevation angles down to –3.0 degrees require manually positioning the antenna. The antenna should never by pointed at the ground either operationally or for test purposes. Pointing the beam at an elevation which intersects the ground in the near distance could result in strong enough reflections to burn out the receiver protector. Such a condition should never by deliberately induced.

- MAJOR EQUIPMENT DAMAGE

Mismating electrical connectors on the RDA, RPG, or PUP can cause major equipment damage. Therefore, ensure that the connector keys/color coding is followed when reconnecting connectors during maintenance.

Loss of lubricant (oil) or glycol (coolant) from the generator engine could result in equipment damage. When performing maintenance, inspect for leaks and tighten fittings as needed. An automatic overtemperature shut–off switch is used to prevent damage.

- REMOVAL OF TOOLS

Remove all tools and dropped hardware such as locknuts, washers, screws, etc., from equipment prior to restoring power to any WSR–88D equipment.

- HOIST SAFETY

Before operating the hoist, the operator shall be familiar with all operating controls of the hoist, and shall be instructed as to warnings on the hoist and the safe hoisting practices listed in the operator's portion of the manual provided by the hoist manufacturer.

- NON–PERMIT CONFINED SPACE (ANTENNA PEDESTAL)

The NEXRAD Safety Officer has determined the three separate entry areas of the Antenna Pedestal as confined spaces, no permit required. As applied to the NEXRAD Antenna Pedestal application, a

Confined Space is defined as: an opening that is: (1) large enough and so configured that an employee can enter bodily and perform assigned work, (2) having a limited means of egress, (3) not designed for continuous employee occupany. A **Non−Permit Confined Space** is defined as: A space that does **not** contain or, with respect to atmospheric hazards, have the potential to contain any hazards capable of causing death or serious physical harm. Reference: OSHA Standards 29 CFR, Part 1910, Subpart J, 1910.146 and NWS EHB 15, Section 12.

- ANTENNA/PEDESTAL SAFETY

WARNING

Do not attempt to climb or service the pedestal assembly while the antenna is rotating and/or while the antenna servos are operating. Severe injury from moving elements may result unless all maintenance instructions and safety procedures are followed.

The antenna/pedestal is provided with safety features and procedures to protect maintenance personnel from hazards associated with moving masses, dangerous heights, and awkward equipment access/handling positions. The safety features provided on the antenna/pedestal assembly include the following:

- Safety interlock switch
- Grab bars
- Non−skid surface(s)
- Ladder hooks
- Stow pins

NOTE

The Radome hatch is equipped with a safety interlock. When the hatch (interlock) is opened, servo power is removed from the Antenna Pedestal and the Transmitter high−power RF output is switched into the dummy load.

To ensure personnel safety, the following precautions must always be observed:

1. Turn off pedestal power at the RDA Data Processor Maintenance Panel.
2. Place SAFETY WARNING tags on the pedestal electronic ON/OFF switch on maintenance panel.
3. Ensure the transmitter is in STANDBY.
4. Place the pedestal “PWR ON/SAFE” switch to “SAFE.”
5. Engage azimuth and elevation stow pins.

6. Use riser ladder properly secured with quick–release pins when climbing the pedestal to work inside azimuth portion of the pedestal.
7. Always use grab bars when climbing the antenna pedestal.
8. Use the appropriate ladder hooks for the ladder for each work area on the antenna pedestal.

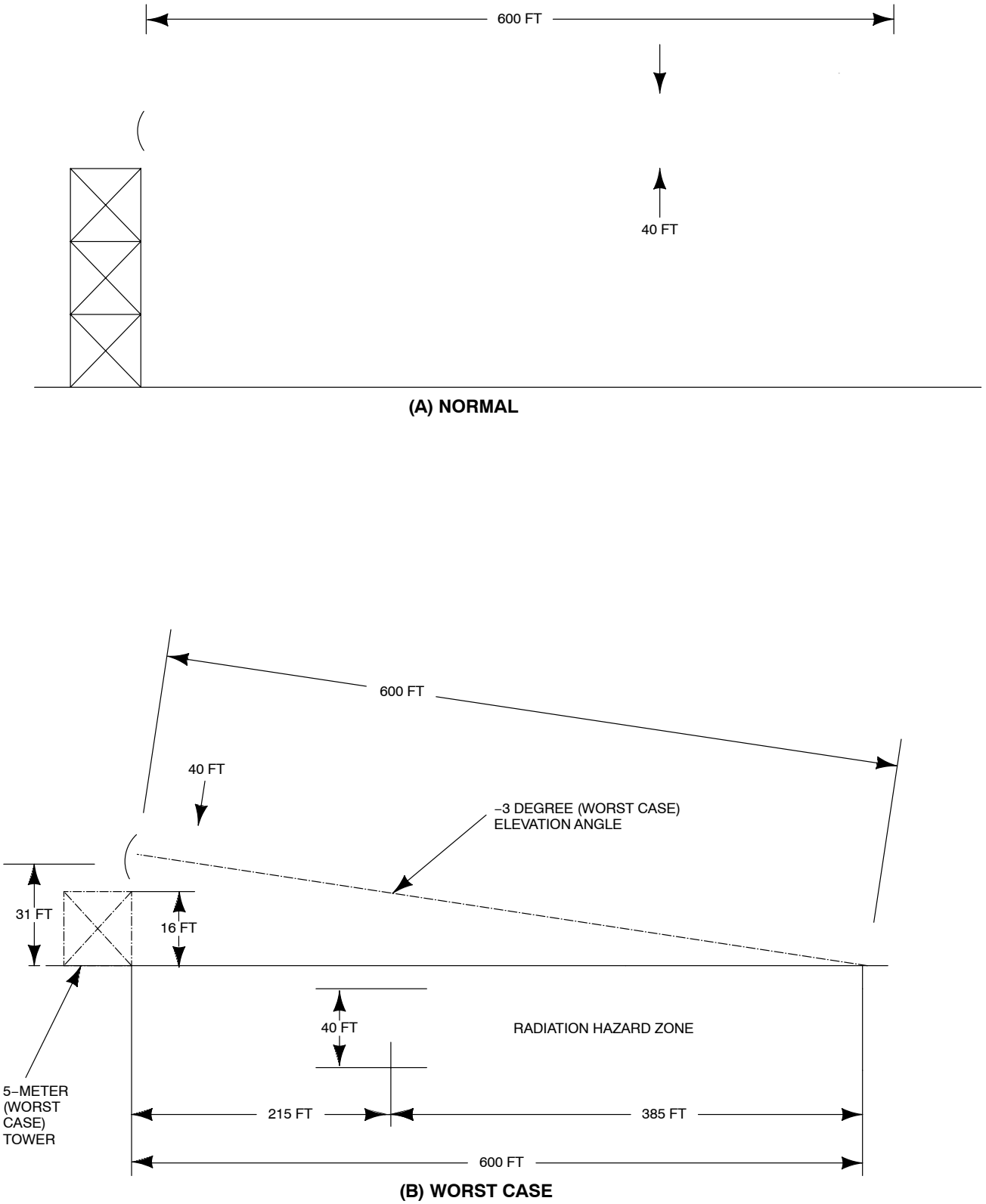

Figure SS–1. Radiation Hazard Zones

CHAPTER 1

GENERAL INFORMATION

NOTE

This chapter and its corresponding sections refer to the Radar Product Generation Processor/Communications Assembly (RPGPCA) as UD70 (previously referred to as the Processor Cabinet {UD21} and Communications Cabinet {UD22}). Unless otherwise specified for Federal Aviation Administration (FAA) redundant systems this information also applies to RPGPCA UD170.

This chapter provides an introduction to the Doppler Meteorological Radar WSR–88D. The chapter is subdivided into five sections:

- Section 1–1, Purpose and Description. This section discusses the purpose of the WSR–88D in terms of its use, configuration, products, and users. The system is described in terms of its equipment group functions.
- Section 1–2, Leading Particulars. This section lists physical characteristics and provides equipment location data.
- Section 1–3, Capabilities and Limitations. This section presents basic system and equipment group capabilities.
- Section 1–4, Equipment Reference Data. This section identifies the equipment supplied, standard tools and test equipment, special tools and test equipment, computer programs, and technical manuals.
- Section 1–5, RPG and MSCF System Security. This section discusses an overview of the security plan for the RPG, MSCF, and their hardware, software, and firmware.

Section 1−1. Purpose and Description

1−1.1 INTRODUCTION.

This section provides an introductory−level description of the system's purpose (what, where, and why) and description (how).

1−1.2 PURPOSE.

The Weather Surveillance Radar−1988 Doppler, hereafter referred to as the WSR−88D, is a stand−alone system that detects, processes, distributes, and displays radar weather data. The WSR−88D uses Doppler radar technology to acquire particle velocity data in addition to range, direction, and reflectivity data. The WSR−88D is a software−driven system. Software processing is used to control the radar operating characteristics to produce the optimum radar volume coverage patterns and to optimize the radar returns. The resulting base weather data is then processed through the application of meteorological algorithms to generate base and derived weather products. These products are further processed using graphics algorithms to produce readily interpretable weather data displays on color monitors. The WSR−88D supports the needs of user agencies within the Departments of Commerce (DOC), Defense (DoD), and Transportation (DOT) for information on the location, intensity, and movement of both routine and hazardous weather phenomena.

1−1.2.1 Configuration. Since the WSR−88D supports the needs of many users, the equipment group locations, equipment complement, equipment arrangement, and computer programs vary from site to site. As a result, each WSR−88D installation may be unique. However, in its basic form, the WSR−88D, Figure FO1−1, is functionally subdivided into six equipment groups described in the following paragraphs.

1−1.2.1.1 Radar Data Acquisition (RDA) Group. The RDA comprises the Doppler radar and provides base weather data. The RDA equipment is contained in a radar equipment shelter, which is collocated with a generator shelter near the radar tower. The radar tower supports the RDA antenna/pedestal. The radar equipment shelter may also contain a radar product generation processor/communications assembly (RPGPCA).

There are two types of redundant systems. They are called Federal Aviation Administration (FAA) redundant systems and National Weather Service (NWS) redundant systems after the agencies which own them. Both types of redundant systems have a partial redundant RDA group. There is only one tower, antenna, pedestal, generator, and equipment shelter. In an FAA redundant system, there are two RDAs and two RPGs; each RDA group communicates to its associated RPG. The NWS redundant system has two RDAs, one RPG, and a wideband communication switch which sends information from either RDA to the RPG.

1−1.2.1.2 Wideband Communications (WBC) Group. The WBC links the RDA with the RPG. It uses hardwire link, TELCO (telephone company) T1 line, private T1 link, or microwave line of sight (MLOS) communication depending upon whether the RDA and RPG are physically collocated or in separate locations. If the RPG is located within 400 ft. of the RDA, the WBC is hardwire linked using a copper cable. If the RPG is located beyond 400 ft. from the RDA, the data is transferred via

"Private T1" equipment, TELCO equipment, or MLOS equipment. When a MLOS WBC is used, there may be a guyed or self–supporting MLOS antenna tower and a MLOS shelter located up to 400 ft. from the radar tower. A guyed or self–supporting MLOS antenna tower may be located at the user's facility.

1–1.2.1.3 Radar Product Generation (RPG) Group. The RPG uses weather algorithms to process the RDA base weather data into a variety of weather data products. The RPG is collocated with the RDA in FAA and DoD systems. In NWS systems, the RPG is located at the controlling associated user's site.

1–1.2.1.4 Master System Control Function (MSCF) Group. The MSCF provides control for the operation and monitoring of the RPG and control of the adaptable parameters used with the RPG algorithms. Status and limited control of the RDA and wideband communications is available at the MSCF as well as status and control of the narrowband communication lines of the associated users, non–associated users, and other users. For FAA and DoD systems a distant MSCF is utilized. NWS sites have a local MSCF. The MSCF, whether local or distant from the RPG, is in the same building as the controlling user's site. Operational information about the application functionality/GUI interface for the MSCF can be found in NWS EHB 6–526 for operators, or NWS EHB 6–525 for maintenance technicians.

1–1.2.1.5 Principal User Systems. Principal users ingest radar products generated by the RPG. The principal user processor (PUP) is a subsystem or group within the WSR–88D and is described further in paragraph 1–1.2.1.5.1 and throughout this manual. External principal user systems perform agency specific functions and are not considered a part of the WSR–88D baseline. Example systems include, but are not limited to, NWS AWIPS, FAA WARP, FAA ITWS, FAA OSD, and DoD OPUP.

The principal user systems rely on several different communications technologies and methods of access to interface the RPG. For a given WSR–88D RPG, each principal user is classified according to the type of communications interface and the association or product access permissions granted for the interface. Associated users have full time dedicated access to the RPG, and they have special access permission that allows them to request product generation/distribution. Non–associated users have on–demand access to the RPG, but they have permissions limited to request products that are regularly scheduled for generation and specifically designated for non–associated users. The different user types are discussed in more detail below and in paragraph 1–1.2.3.

1–1.2.1.5.1 Principal User Processor (PUP) Group. The PUP uses display algorithms to format the RPG's weather products for display as graphics weather maps. The PUP workstation is the user's operating position for the WSR–88D product data. The PUP is always located at a user's facility. There may be more than one PUP associated with an RPG. The PUPs may be located at different user facilities. The PUP and RPG equipment layout at a user's facility is variable. PUPs communicate with the RPG via analog links (leased, private, and dial telephone lines) that are more commonly referred to as plain old telephone service (POTS). Connection to the telephone dial system network allows PUPs not associated with the WSR–88D system site to access weather products from the system. The PUP is one type of principal user system that can act as either an associated or a non–associated user.

1–1.2.1.5.2 External Principal Users. The external principal users' systems ingest and display radar products from the RPG according to agency specific needs. For the NWS WSR–88D RPG, the

associated principal user is typically a WFO AWIPS that is located in the same facility as the RPG. FAA and DoD may also have associated principal users connected to the NWS RPG. However, the user systems will be located at their respective agency's facilities. For the FAA WSR–88D, the OSD is typically the only associated user that is located within the RDA/RPG shelter. The remainder of associated users will be located at their respective agency's facilities. For the DoD WSR–88D, the associated principal users are all located at their respective agency's facilities. Like the PUP, some external users' systems have capability to support both associated and non–associated access.

1–1.2.1.6 Real Property Installed Equipment (RPIE) Group. The RPIE comprises equipment shelters, towers, radome, transition power generation, backup power generation, and auxiliary functions.

1–1.2.2 Meteorological Products. To provide users with real–time weather radar data, the WSR–88D generates weather products which are presented to operational personnel. Products which depict specific weather phenomena are available to users in a readily interpretable, graphical format on color monitors and via a color printer available at the PUP. Base and derived products depict precipitation, wind, tornadoes, mesocyclones, thunderstorms, hail, and clear–air phenomena. Many of the weather products, including hydrological products, are generated automatically and distributed to users on a routine basis. Some products may be enhanced by operator review, interpretation, and annotation; however, the basic product can be provided to users who do not desire the annotations. Products are provided in four different formats for distribution and presentation: base products, derived products, alphanumeric products, and data array products. These formats are described briefly in paragraphs 1–1.2.2.1 through 1–1.2.2.4, and in greater detail in NWS EHB 6–526, Appendix A.

1–1.2.2.1 Base Products. Base products are generated by the RPG from reflectivity, mean radial velocity, and spectrum width base data generated by the RDA and transmitted to the RPG. The RDA resolves range ambiguities, marks data overlaid by range ambiguities, removes biases caused by receiver noise, and thresholds the data. The RPG resolves velocity ambiguities in the mean radial velocity base data prior to generating the base products. These base products consist of reflectivity, mean radial velocity, and radial velocity spectrum width. They are generated in several different resolutions as specified in the product generation list. The base products are plan position indicator (PPI)–type constant elevation "cut" displays when presented on a color graphics monitor at the PUP.

1–1.2.2.2 Derived Products. Derived products are obtained by processing base data using meteorological, hydrological, and display processing algorithms resident in the RPG processor. The derived products, when displayed on color graphics monitors, depict the data in a form requiring minimum interpretive effort by the operator. Derived products include both direct area field and contour presentations of reflectivity, echo tops, and may include annotations of storm cell tracks, mesocyclones, tornado vortex signatures (TVS), and identified or probable hail locations. Displays of derived products may collect data from multiple elevation angle cuts. In addition to the symbolic annotations, the derived products may include a variety of annotations generated by the algorithms and may be indicative of severe weather. The derived product processing techniques permit the establishment of detection and alert thresholds for phenomena such as hail, tornado vortex signatures, and mesocyclones. Such weather alerts are presented symbolically to the operator on the graphics display monitors and also by means of an audible alarm located at the PUP operator workstation.

1–1.2.2.3 Alphanumeric Products. Alphanumeric products provide processed radar data for users. They consist of text messages and summary formats of coded radar observations. The alphanumeric products also provide the operator with quantitative hard data which may be displayed on a cathode ray tube (CRT) monitor for immediate evaluation, or generated as hardcopy by the PUP printer.

1–1.2.2.4 Data Array Products. The derived data array products are used to provide data in a compressed, nondisplayable format for transmission to systems external to the WSR–88D for further processing. These products, which consist of digital data fields and streams, may also be archived for later processing and analyses.

1–1.2.3 Principal Users. The users of WSR–88D weather products fall into two categories: associated users and non–associated users. Associated users have full–time dedicated connections to one or more RPGs. Non–associated users have on–demand dial access to RPGs according to their operational need. Associated users always have a full time dedicated line intended for 24x7 access to the RPG. These users can be the PUP, Open Principal User Processor (OPUP), Weather and Radar Processor (WARP), Advanced Weather Interactive Processing System (AWIPS), Integrated Terminal Weather System (ITWS), or FAA On Site Display (OSD). There are multiple dedicated access communications technologies available to the associated user dependent upon their proximity to the RPG. A non–associated user is a dial user and can be either a PUP, AWIPS, or OPUP. The two user categories and their respective capabilities are summarized in Table 1–1.

Table 1–1. Association Categories and Respective Capabilities

	User Category	
Capability Overview	Associated	Non–Associated
Full–Time 24 x 7 RPG Access	X	
On–Demand RPG Access		X
Dedicated Connection to RPG	X	
Dial Connection to RPG		X
Sends Routine Product Set (RPS) List	X	X
Receives RPS Products Routinely	X	
Makes One–Time Product Requests	X	X
Password Protected Access		X

The users have processing and display capabilities provided by their system to support the routine display of selected current or archival products, the annotation of products, and the further distribution of products. Each RPG has the capability of interfacing with associated and non–associated users' systems via their respective data communications networks for transmission of weather radar data to national, regional, and local facilities that may be remote from the RPG. Each RPG also provides the capability for non–associated users with remote display subsystems to establish dial–up communication connections to obtain weather radar data. The equipment provisions required to establish these connections are, however, the responsibility of the appropriate user agency. A procedural access method using password protection and time–out limits is used to

allow different groups of users to share common dial–up interface ports. Users assigned to the same dial–up port have equal priorities; however, different ports may have different priorities. Each associated or non–associated user may interface to other data dissemination systems.

1–1.3 DESCRIPTION.

The basic WSR–88D system (Figure FO1–1) consists of six equipment groups that are interconnected to provide the WSR–88D operational requirements. The six equipment groups are:

- RDA group
- WBC group
- RPG group
- MSCF group
- PUP group
- RPIE group

Paragraphs 1–1.3.1 through 1–1.3.6 briefly describe the primary functions of each of the six equipment groups, their principal equipment, and the basic flow of system data. Refer to Chapter 3 for a more detailed description of the WSR–88D system's theory of operation.

There are numerous types of external principal user systems that connect to the RPG Group, but are not considered a part of the WSR–88D equipment suite. These external users perform functions similar to the PUP with respect to ingest and display of products from the RPG Group. Paragraph 1–1.3.7 briefly describes these systems and how they inter–connect to the RPG in place of the PUP group.

1–1.3.1 RDA Group. The RDA is the Doppler radar subsystem which generates and radiates RF pulses, then acquires and processes reflected RF signals to obtain weather radar base data. The base data consists of measurements of reflectivity, mean radial velocity, and velocity spectrum width. Base data is available in digital format for archiving and for transmission to the RPG group. The RDA is a self–contained unit designed for continuous, unattended operation. The RDA includes the radar transmitter, antenna/pedestal, radar receiver, and data processor cabinet. The data processor cabinet contains the associated hardware, firmware, and software required to perform the signal processing, ground clutter suppression, data extraction, pedestal control, status monitoring and fault detection, local control and display of performance data, auto–calibration, and archiving functions related to the radar operation. The antenna/pedestal is housed in a radome on top of a radar tower; other RDA equipment is housed in the radar equipment shelter. Both types of redundant systems have a partial redundant RDA group. There is only one tower, antenna, pedestal, generator, and equipment shelter. Both redundant systems also have waveguide switches to choose which transmitter and receiver have access to the antenna.

1–1.3.2 WBC Group. The WBC provides high–speed intercomputer transfer of base data, radar status, and control data between an RDA and its associated RPG. Depending on the separation distance and local requirements, the wideband links at a particular site may be as follows: a hardwire

link for distances up to 400 ft.; a “Private T1” link for distances from 400 ft. through 3000 ft.; a T1 telephone connection when such service is available and cost effective, for a virtually unlimited connection distance; or a MLOS link, for distances from 0.6 mile through 24 miles. When MLOS is used, both ends of the respective link are housed in their own cabinet. At the RDA, the MLOS antenna is mounted on the radar tower or MLOS tower. At the RPG, the MLOS antenna is mounted on the facility roof, existing tower, or on a separate self–supporting tower.

1–1.3.3 RPG Group. The RPG receives the base data from the RDA and processes it into base products (reflectivity, mean radial velocity, and velocity spectrum width). The RPG further processes this base data using stored algorithms to develop a set of derived meteorological products. The resulting product set, including the base products, is then made available for distribution over narrowband communications links to PUP groups associated with the RPG and to other user systems. The RPG consists of a processor/communications assembly. FAA redundant systems contain two RPGs, each connected to a corresponding RDA. The FAA redundant system also contains a relay box that switches either RPG’s information to associated and non–associated users, via narrowband communication lines. FAA redundant systems have remote monitoring subsystem (RMS) links that monitor power supply outputs and communicate with the RPG application software for system status and control. NWS redundant systems contain only one RPG.

1–1.3.3.1 RPG Processor/Communications Assembly Cabinet. The RPGPCA cabinet contains all the hardware and software required for real–time generation and storage of products for operational use. It also includes the hardware and software required for system remote control, status monitoring and error detection, product archiving, and hydrometeorological data processing.

The RPGPCA cabinet contains the narrowband links used between the RPG and its users for product requests and distribution, and for inter–site product requests and distribution. The narrowband communication links are plain old telephone service (POTS) type circuits that require modems to modulate/demodulate serial binary data for transmission over voice grade analog links. The user to RPG links are either directly interconnected for intra–facility communications or leased dial–up commercial telephone lines for external data distribution. The hardware to ingest and distribute base data, to a maximum of four users, is provided. The NWS RPG contains one 10/100 BaseT Ethernet LAN connection for principal user product distribution to the AWIPS.

1–1.3.3.2 Remote RDA Maintenance Terminal. The remote RDA maintenance terminal is used in NWS redundant systems. It reports to the RPG but physically interacts with either RDASC processor. The remote RDA maintenance terminal is used by operators to enter control commands to the RDA status and control (RDASC) processor, perform RDA system operational tests, and request operational status.

1–1.3.4 MSCF Group. The MSCF can be located distant or local with respect to the RPG. The MSCF is used by operators and maintenance technicians for control of the RPG and the radar. The MSCF terminal is also used for system test and troubleshooting and local product selection, generation, and distribution control. For FAA and DoD systems, a distant MSCF is used. NWS systems utilize a local MSCF.

1–1.3.5 PUP Group. The PUP receives base and derived weather products from the RPG and provides for the request, display, storage, annotation, and distribution of products by operational personnel. The PUP consists of a PUP data processor cabinet, a PUP workstation, and a system console.

1–1.3.5.1 PUP Data Processor Cabinet. The PUP data processor cabinet contains the dedicated hardware and software required for graphics processing, local control, status monitoring, local annotation, and product archiving. The cabinet also contains the narrowband links used between the PUP and its associated RPG for internal product requests and distribution, and for external product requests and distribution from non–associated RPGs. The narrowband communication links are modem–based serial data links that are directly interconnected for internal communications, or are utilized for transmission over leased or dial–up commercial telephone lines for external data distribution.

1–1.3.5.2 PUP Workstation. The PUP workstation is the primary operator work area. It includes two high–resolution color–graphics monitors, a puck–operated product selection tablet; a dedicated color–graphics printer; a red, green, blue, sync (RGBS) line driver/equalizer; limited distance modems (LDMs); and an applications terminal for keyboard entry and cathode ray tube (CRT) display of status data and alphanumeric product data.

1–1.3.5.3 PUP System Console. The system console is an alphanumeric display terminal which is used for local control and testing of the PUP display processor.

1–1.3.6 RPIE Group. The RPIE comprises the equipment shelters (radar, generator, MLOS, and transition power maintenance (TPMS), towers (radar, guyed MLOS, and self–supporting MLOS), radome, and auxiliary equipment. The auxiliary equipment includes power distribution (including backup power generation) and lighting; heating, ventilating, and air conditioning; fire detection; and security and status monitoring systems.

1–1.3.7 External Principal Users. These users receive base and derived weather products from the RPG and are responsible for the request, display, storage, and annotation of products by operational personnel. Some of these systems are also capable of re–distribution of WSR–88D products to other external users. Example external user systems include, but are not limited to, NWS AWIPS, FAA WARP, FAA ITWS, FAA OSD, and DoD OPUP.

1–1.4 OPERATION.

The WSR–88D system operates under program control. Control stations allow the user to interface with these programs to monitor and modify the program processing. Program and user control is discussed briefly in paragraphs 1–1.4.1 and 1–1.4.2, respectively.

1–1.4.1 Program Control. The heart of the WSR–88D system is a series of linked data processors (Figure FO1–3). These processors operate in concert to transform user requests into radar control commands, to extract the base weather data from the radar returns, to transform the base weather data into weather products, and to format and display these products for user interpretation. The following processors link the radar to the user:

1–1.4.1.1 RDA Hardwired Signal Processor (HSP). The HSP receives digital video data from the radar receiver and performs clutter filtering, and synchronizes the I and Q data on a range cell–by–cell basis.

1–1.4.1.2 RDA Programmable Signal Processor (PSP). The PSP receives time–series digital radar data from the HSP, extracts the four basic elements to produce the weather data, and performs range unfolding.

1–1.4.1.3 RDA Status and Control Processor. The RDASC processor controls the operation of the radar. It generates control signals for, and monitors the status of, the antenna positioning electronics, transmitter, receiver, HSP, and PSP. It formats the base data received from the PSP and controls the wideband communication link to exchange data with the RPG Processor.

1–1.4.1.4 RPG Product Generation Processor. The product generation processor receives base weather data from the RDASC, processes the data into base and derived products, temporarily stores the products, and transmits the products to all users as required. It also remotely controls the RDASC processor and monitors system status.

1–1.4.1.5 PUP Display Processor. The display processor receives weather products and RDA/RPG status from the RPG product generation processor. It stores, edits, annotates, processes for display, distributes, and archives the designated weather products.

1–1.4.1.6 PUP Graphics Processor. The graphics processor receives the display formatted weather products from the display processor and converts them into video signals for display on the color graphics display monitors or transfers them in digital format to the color graphics printer. The graphics processor also interprets control signals received from the graphics tablet and transfers them to the display processor. For PUP workstation extensions, where the cables between the graphics processor and the color monitors are greater than 100 ft. in length, the signals are amplified by RGBS line driver/equalizers and a parallel line extender is used in communication with the printer. Refer to Section 3–2 for a more detailed discussion of the functions performed by the computer programs.

1–1.4.2 User Control. The user, either an operator or a maintainer, interfaces with the processor programs to exercise control via a number of display terminals and devices (Figure FO1–3). These user interface devices are listed below:

1–1.4.2.1 RDA Maintenance Terminal. The RDA maintenance terminal is used in the RDA and is a dual–port alphanumeric terminal consisting of a keyboard and CRT display. It is used to setup the RDA, to control the RDA, as well as control and monitor RDA maintenance functions. At certain sites, the terminal's other port may be used to perform an RPG console terminal function via a cable connection to the RPG cabinet. The RDA maintenance terminal could be a CDT–100 system or an RDA/RPG remote access terminal (RRRAT) system.

1–1.4.2.2 MSCF. The MSCF provides control for the operation and monitoring of the RPG. It is located either local or distant from the RPGPCA. It provides an operator with the interface necessary to carry out the control and status monitoring functions. The MSCF also monitors the RDA operability and status via messages from the RDA. The MSCF displays the status and error messages periodically, upon operator request, or upon a change in status within the WSR–88D system. It provides limited operator control of the RDA.

All MSCFs consist of a terminal suite made up of the MSCF processor (UD71A1), 21–inch monitor (UD71A2), keyboard (UD71A3), and mouse (UD71A4). Additionally all MSCFs have a backup storage device (UD71A6), surge suppressor (UD71E1), and a color printer (UD79A1). A distant MSCF has either a dedicated–port modem (UD71A5) or a frame relay hub router (UD75A1).

1–1.4.2.2.1 Local MSCF. At NWS sites, the MSCF is located locally with the RPGPCA cabinet (within the same building), and it is referred to as a local MSCF. The local MSCF communicates to

the local area network (LAN) within the RPGPCA cabinet through a transmission control protocol (TCP)/ internet protocol (IP) ethernet connection (in bandwidth) via the router (UD70A2). The router (UD70A2) in the RPGPCA cabinet is connected to the serial interface of the power administrator (UD70A10) and allows for an out−of−bandwidth serial link to the power administrator for performing power off/on resets. The LAN switch allows access to almost all the RPGPCA components, including the RPG processor (UD70A7), to carry out control and status monitoring functions.

1−1.4.2.2.2 Distant MSCF. At DoD and FAA sites, the MSCF is located at a distance from the RPGPCA cabinet and is referred to as a distant MSCF. The RPG and the distant MSCF transmit and receive transmissions via a communication link using either dedicated−port modems or frame relay circuit and a frame relay hub router. In the FAA system, the distant MSCF link is switched in the relay box with connections to the RPG router in each channel. The router (UD70A2) in the RPGPCA cabinet is connected to the serial interface of the power administrator (UD70A10) and allows for an out−of−bandwidth serial link to the power administrator for performing power off/on resets. Thus the distant MSCF provides an operator interface from which control and monitoring functions are carried out.

1−1.4.2.3 Remote RDA Maintenance Terminal. The remote RDA maintenance terminal is used in NWS redundant systems. It reports to the RPG but physically interacts with either RDASC processor. The remote RDA maintenance terminal is used to enter control commands to the RDASC processor, perform RDA system operational tests, and request operational status.

1−1.4.2.4 PUP Workstation. The PUP Workstation is the primary operational position for the WSR−88D. It provides for the control of the PUP and the request/display of weather products, and consists of the following:

1−1.4.2.4.1 Application Terminal. The application terminal is a dual−port alphanumeric terminal consisting of a keyboard and CRT display. One port is connected to the graphics processor to enable the operator to monitor its operation or the maintainer to load and monitor processor diagnostics. The second port is connected to the display processor and provides the main operator interface with the system via the application program.

1−1.4.2.4.2 Graphics Tablet. The graphics tablet uses a puck to send control signals to the display processor via the graphics processor which provides the operator with graphics display control.

1−1.4.2.4.3 Color Graphics Display. The color graphics display consists of two 19−inch color monitors used to display weather products. Each monitor is driven by a color channel generated by the graphics processor and may display either one or four color images.

1−1.4.2.4.4 Color Graphics Printer. The color graphics printer is driven by the graphics processor and provides a color hardcopy of the designated product or a six intensity−level monochromatic hardcopy.

1−1.4.2.4.5 Audible Alarm. The audible alarm provides an audible alert for specifically designated product thresholds to the workstation operator. The audible alarm also sounds with the arrival of a free text message from the RPG.

1−1.4.2.4.6 System Console. The system console is identical to the application terminal. One port is connected to the display processor for initialization, program loading, continuous monitoring of

the operating system, and performing diagnostics. Refer to NWS EHB 6–531, Chapter 2, for a more detailed discussion of the operator's system console operations.

1–1.4.2.4.7 Limited Distance Modems. The LDMs are provided in the PUP cabinets and PUP workstations which are separated by a distance greater than 100 ft. There are a total of six LDMs: three at the PUP Cabinet and three at the PUP Workstation. The modems drive the graphics tablet and the application and diagnostic ports of the application terminal.

1–1.4.2.4.8 RGBS Line Driver/Equalizer. The graphics processor sends three video signals to each PUP workstation color monitor. For PUP workstation extensions where the cables between the graphic processor and the color monitors are longer than 100 ft., the signals are amplified by RGBS line drivers/equalizers. RGBS represents red, green, blue, and sync. The sync input and output are not used. The sync signal comes across with the green. One line driver/equalizer is required for each color monitor.

1–1.4.2.4.9 Parallel Line Extender. The color graphics printer is driven by the graphics processor. For PUP workstation extensions where the cables between the graphics processor and the color graphics printer are greater than 100 ft. in length, the signals are amplified by the parallel line extender.

Section 1–2. Leading Particulars

1–2.1 INTRODUCTION.

This section provides an overview of the various site, equipment group, and equipment cabinet configurations; site layout and equipment locations; and the physical characteristics of the equipment supplied.

1–2.2 WSR–88D CONFIGURATIONS.

To support the needs of a variety of users with differing requirements, the number of equipment groups comprising a WSR–88D system, the site layout of the equipment groups, the physical arrangements of the equipment, and the functional configuration of individual equipment are variable. The individual equipment groups (RDA, RPG, MSCF, and PUPs) of a WSR–88D system may be collocated at a single facility; however, these elements are usually separated. The RDA's location is optimized for radar coverage requirements. The RPG is either collocated with an RDA (radar antenna) site or located at the primary associated user's site. Associated users can be of a variety of systems, including PUP, NWS AWIPS, DoD OPUP, or FAA WARP. There is usually more than one associated user with an RPG and these associated users are located at various operational facilities. Associated users are connected to their respective RPGs by dedicated lines. There are also stand–alone users, known as non–associated users, who are not connected to any RPG with a dedicated line. Non–associated users communicate with RPGs via dial lines. For example, in Figure 1–1, sheet 1, the equipment groups comprising a typical WSR–88D system are physically located at five different sites:

- The RDA is located at the NWS radar site
- The RPG, local MSCF, and User–1 are located at a Weather Forecast Office (WFO)
- User–2 is located at an Air Force Base (AFB)
- User–3 is located at a River Forecast Center (RFC)
- User–4 is located at an Air Route Traffic Control Center (ARTCC)

On the other hand, Figure 1–1, sheet 2 shows a typical DoD WSR–88D system which is configured differently at four sites:

- The RDA and RPG are collocated at the DoD radar site
- User–1 and the distant MSCF are located at an NWS WFO site
- User–2 is located at a DoD site
- User–3 is located at an ARTCC site

The equipment in each equipment group can be configured in a variety of ways to meet the user requirements. As a result, the equipment complement for each WSR–88D system is unique.

(Table 1–20 through Table 1–25 identify the equipment complement variations for the RDA, WBC, RPG, MSCF, PUP, and RPIE equipment groups, respectively.) For the purposes of overview, an associated user is a dedicated user and can be a PUP, DoD OPUP, FAA WARP, FAA ITWS, or NWS AWIPS. A non–associated user is a dial in user and can be either a PUP, AWIPS, or the OPUP.

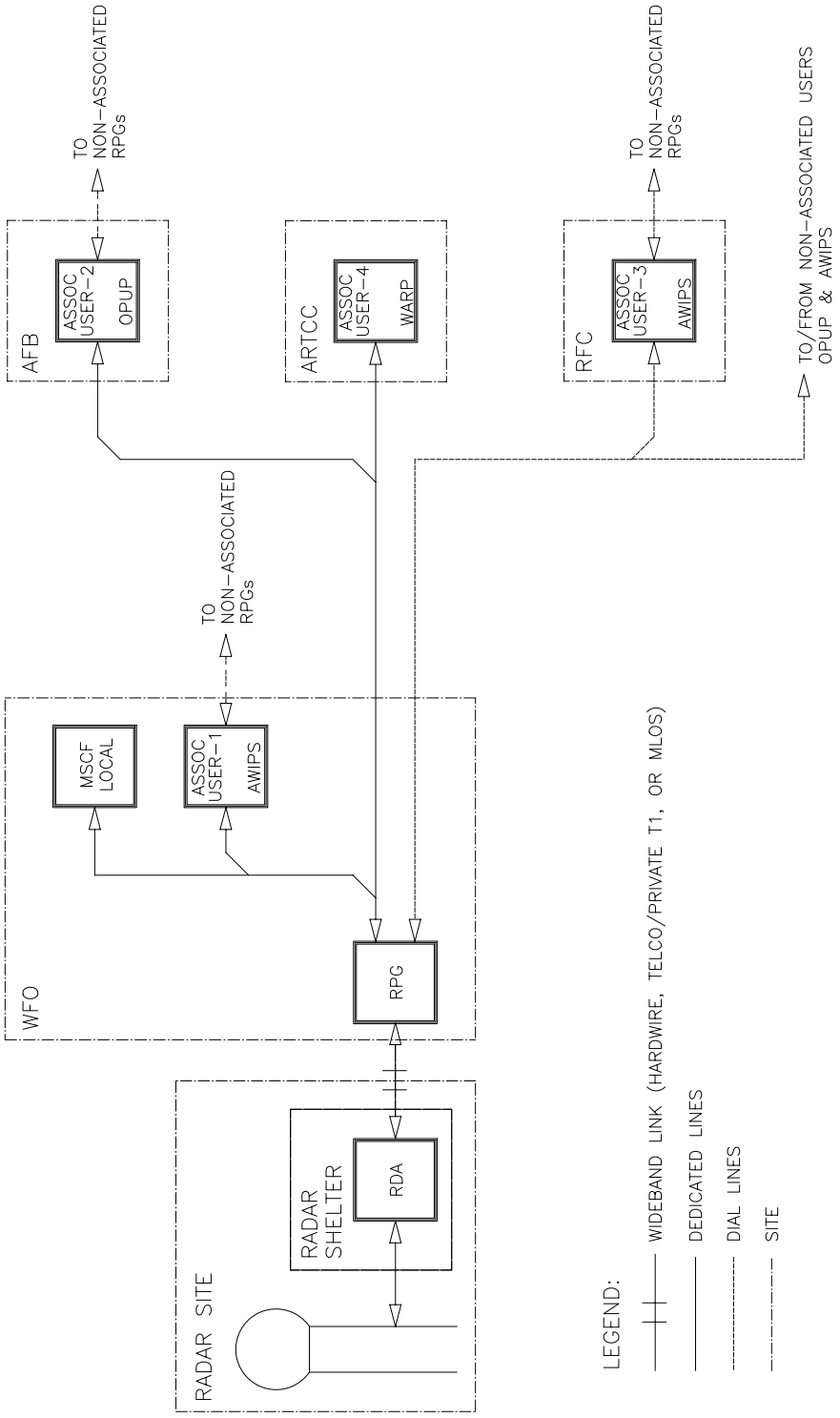

NX1488

Figure 1–1. Sample WSR–88D Site Configurations (Sheet 1 of 2)

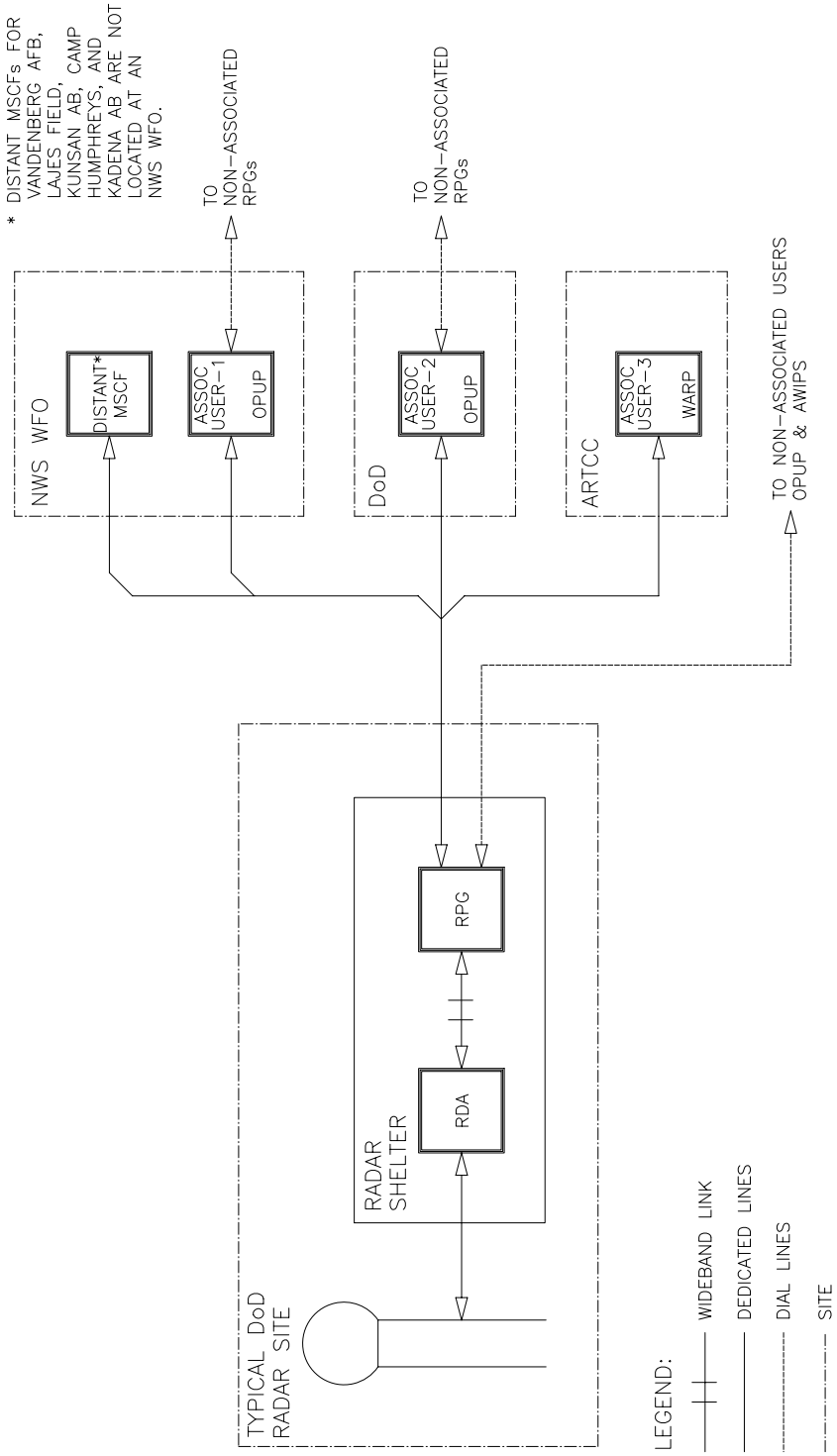

NX1489

Figure 1–1. Sample WSR–88D Site Configurations (Sheet 2 of 2)

1–2.3 EQUIPMENT LOCATIONS.

A typical WSR–88D radar site layout is shown in Figure 1–2. Individual equipment locations within the generator shelter, radar equipment shelter, radar tower, MLOS, and transition power maintenance shelters are shown in Figure 1–3 through Figure 1–10, respectively. Since the locations of the RPG and PUP equipment in a principal user's facility are variable, Figure 1–11 indicates a typical layout. Much of the functionally independent equipment is rack mounted in cabinets. These multi–equipment cabinets consist of the following:

- RDA data processor cabinet
- MLOS radio cabinet
- RPG processor/communications assembly cabinet
- PUP data processor cabinet

The locations of the equipment mounted in these cabinets are shown in Figure 1–12 through Figure 1–15, respectively.

1–2.4 PHYSICAL CHARACTERISTICS.

The physical characteristics (heat dissipation, power requirements, dimensions, and weight) of the RDA, WBC, RPG, MSCF, and PUP equipment are summarized in Table 1–2 through Table 1–6. Refer to the RPIE system manuals (NWS EHB 6–550 or NWS EHB 6–553) for the physical characteristics of the RPIE equipment. Figure FO1–4 indicates the maximum equipment separation distances (cable lengths). Because of layout standards, distances between the radar equipment shelter, transition power maintenance shelter, generator shelter, and radar tower are fixed.

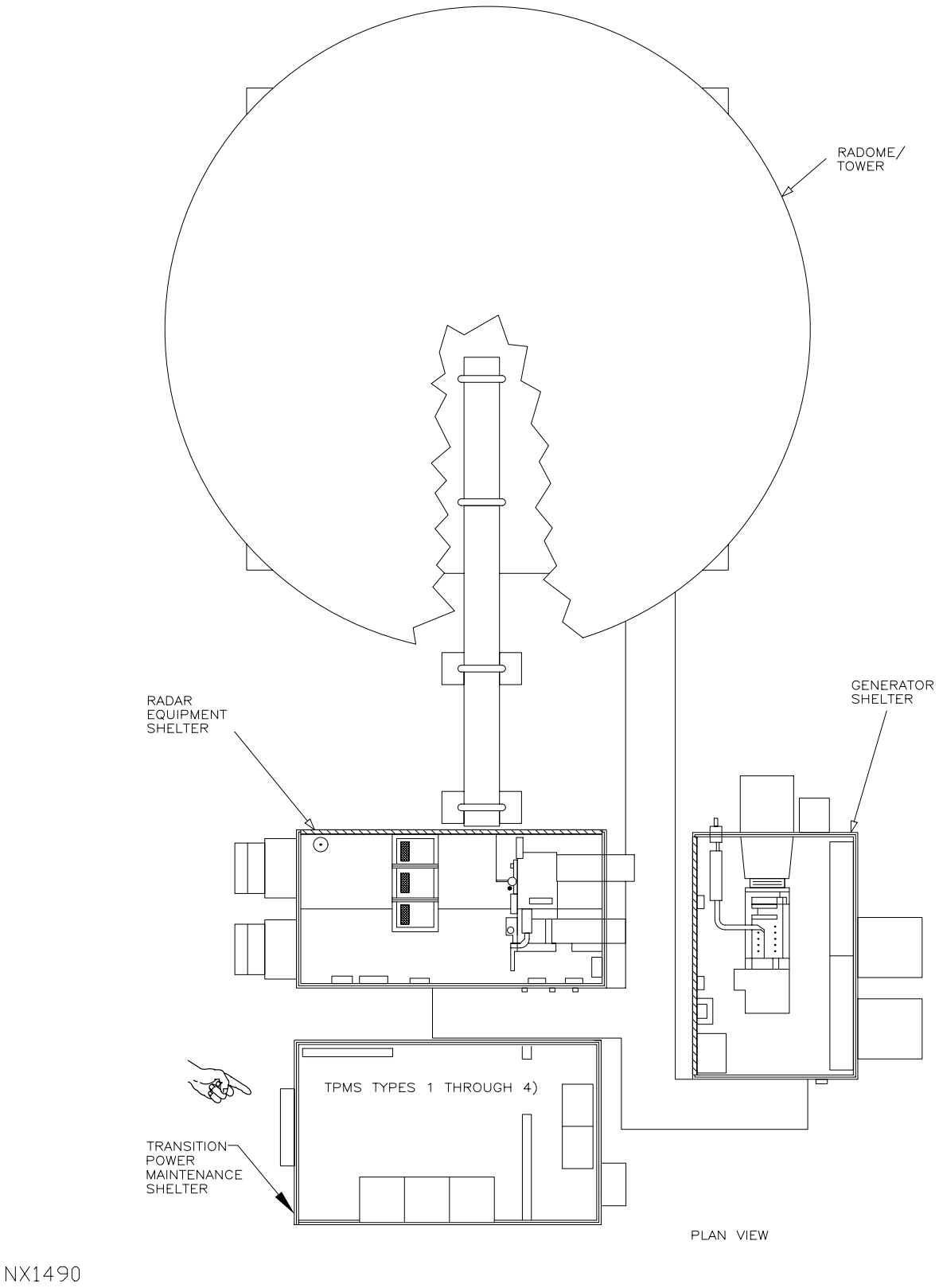

Figure 1–2. Typical WSR–88D Site Layout (Sheet 1 of 3)

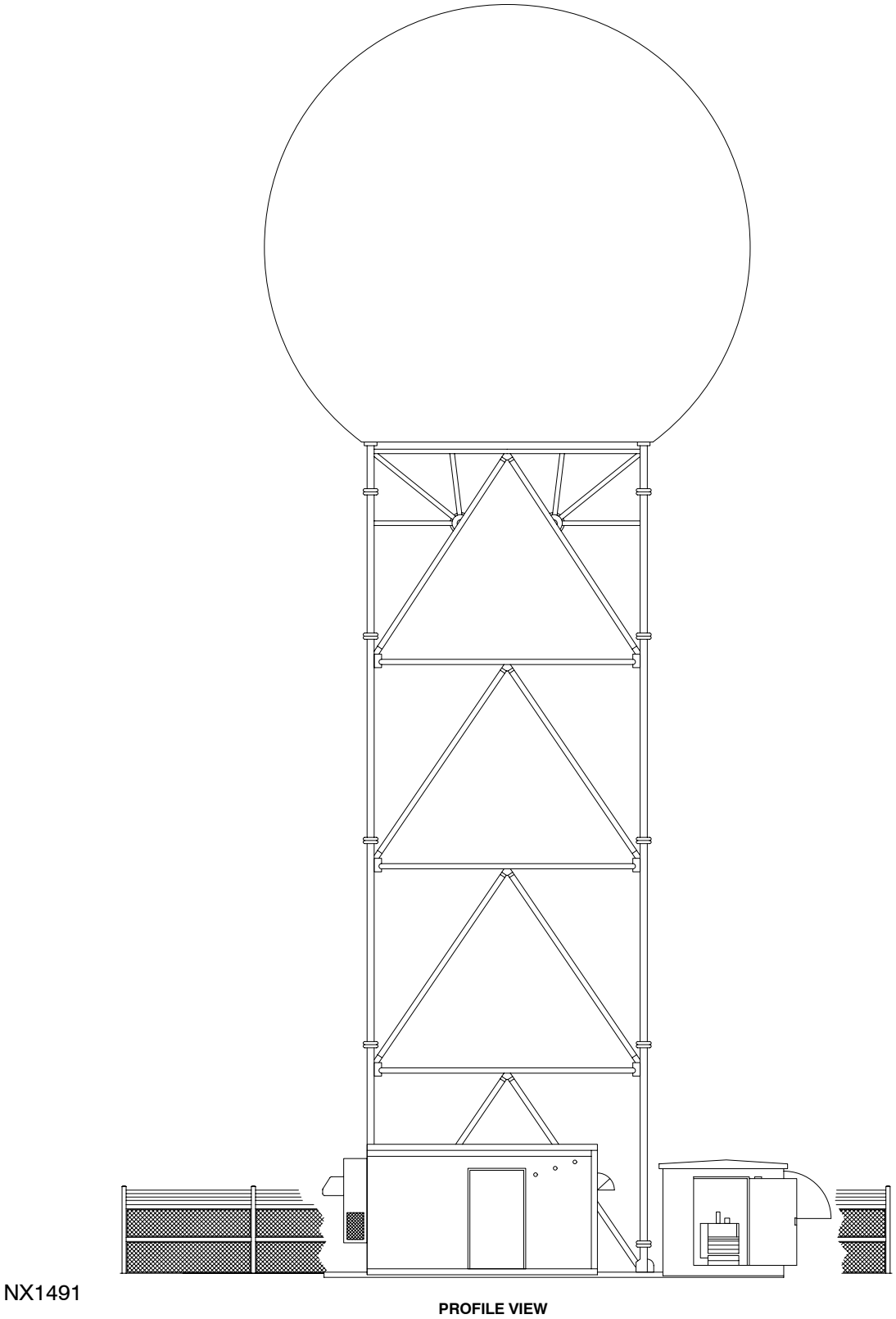

Figure 1–2. Typical WSR–88D Site Layout (Sheet 2 of 3)

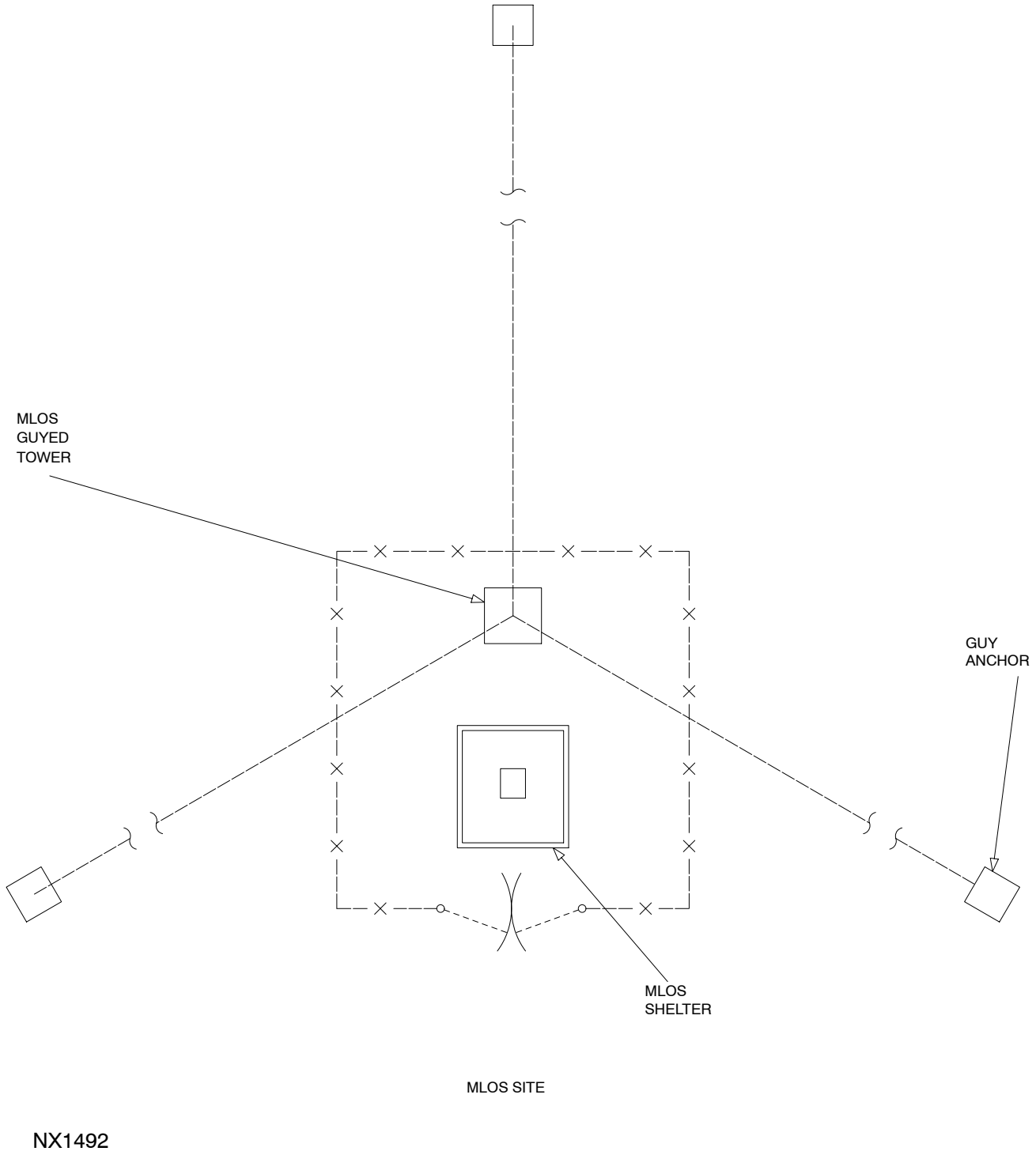

Figure 1–2. Typical WSR–88D Site Layout (Sheet 3 of 3)

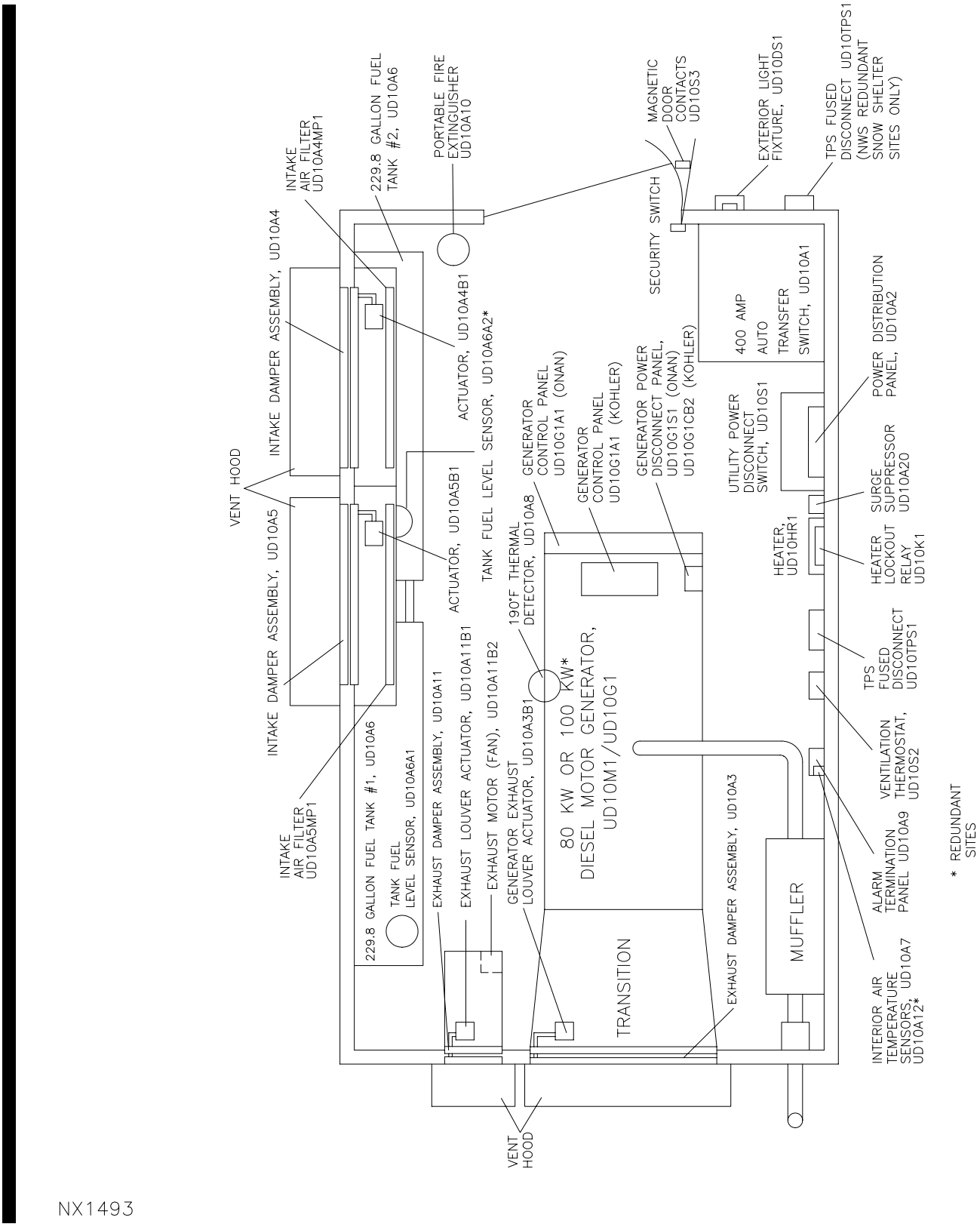

Figure 1–3. Generator Shelter, Equipment Location Diagram

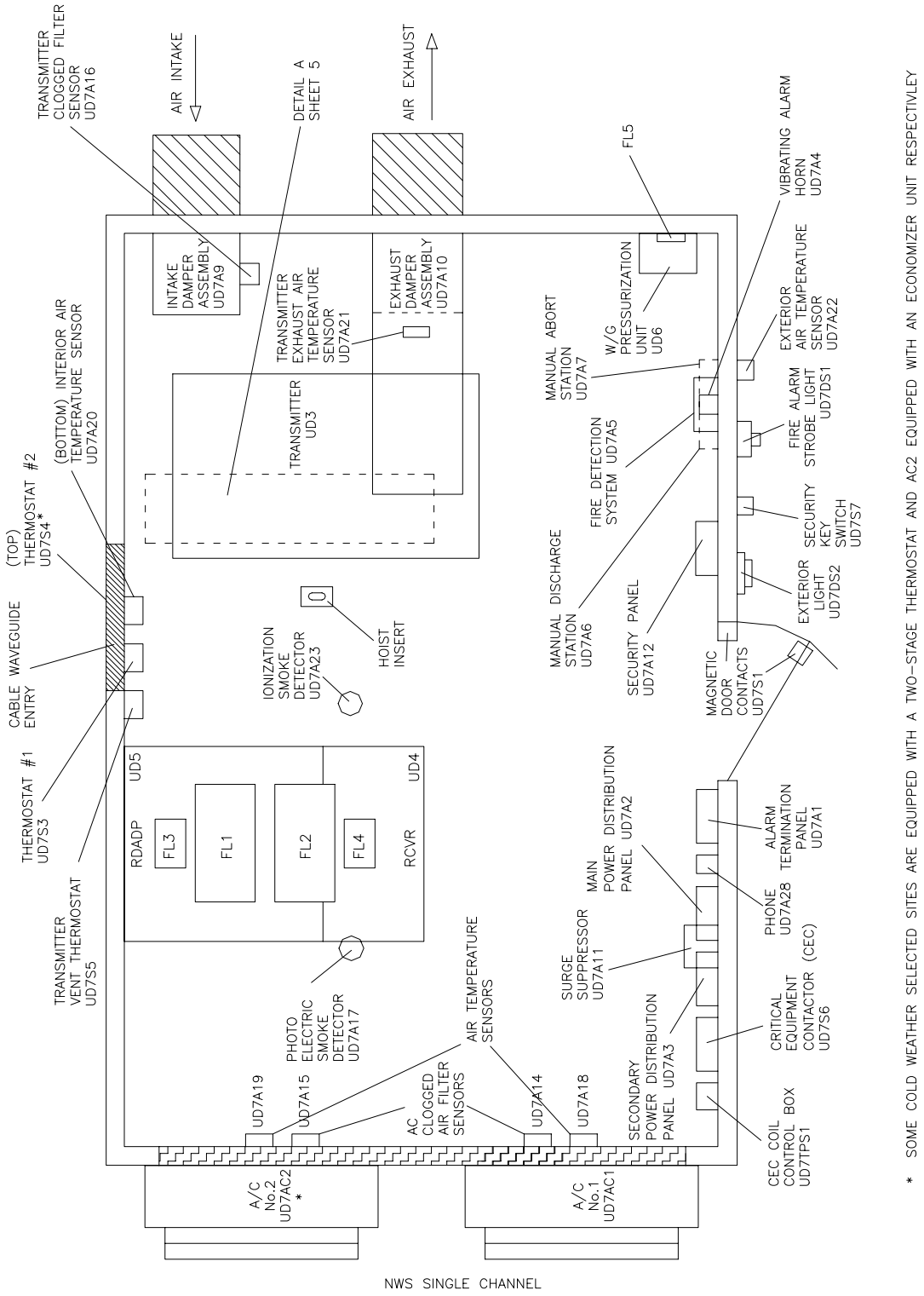

Figure 1–4. Radar Equipment Shelter, Equipment Location Diagram (Sheet 1 of 6)

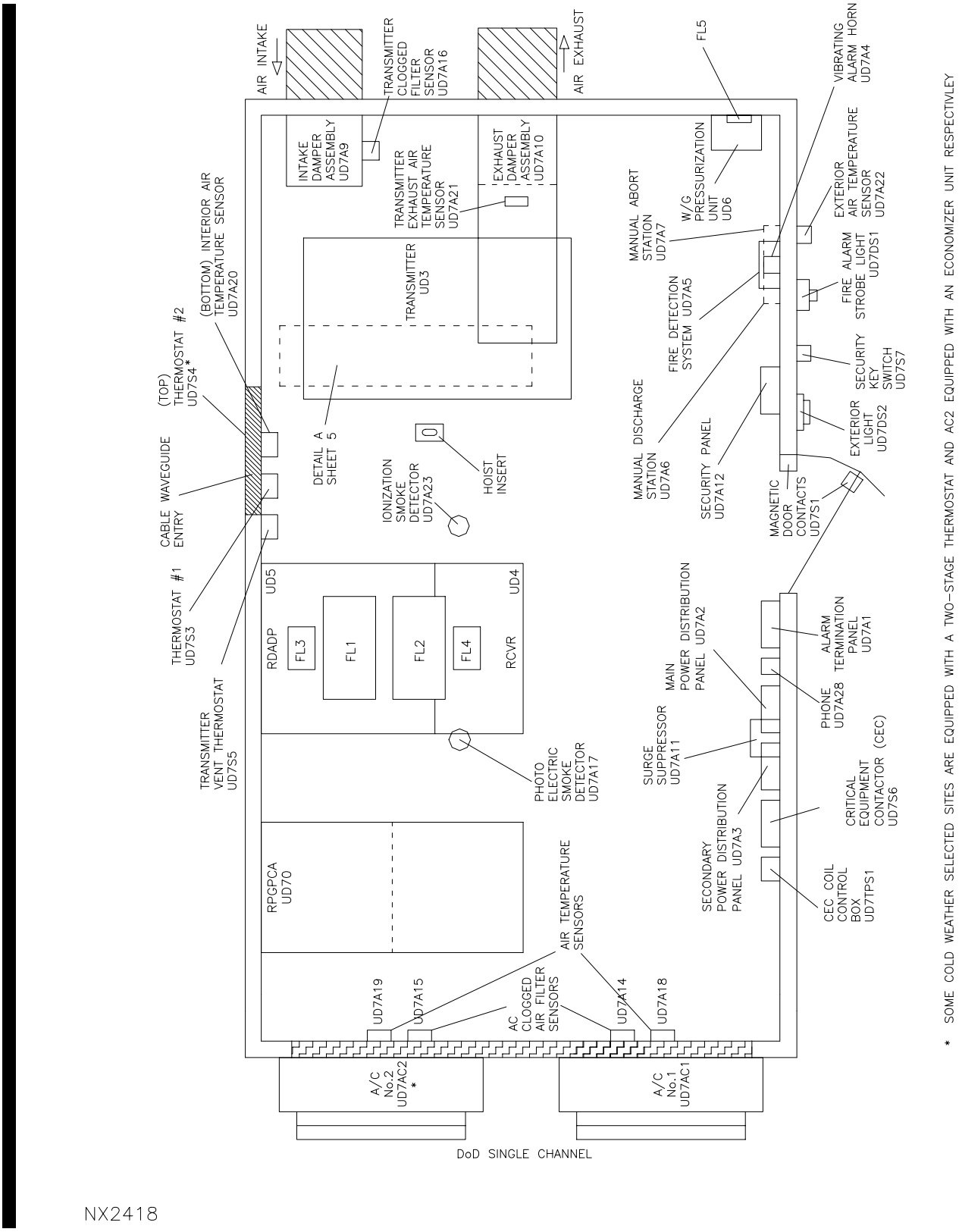

Figure 1–4. Radar Equipment Shelter, Equipment Location Diagram (Sheet 2 of 6)

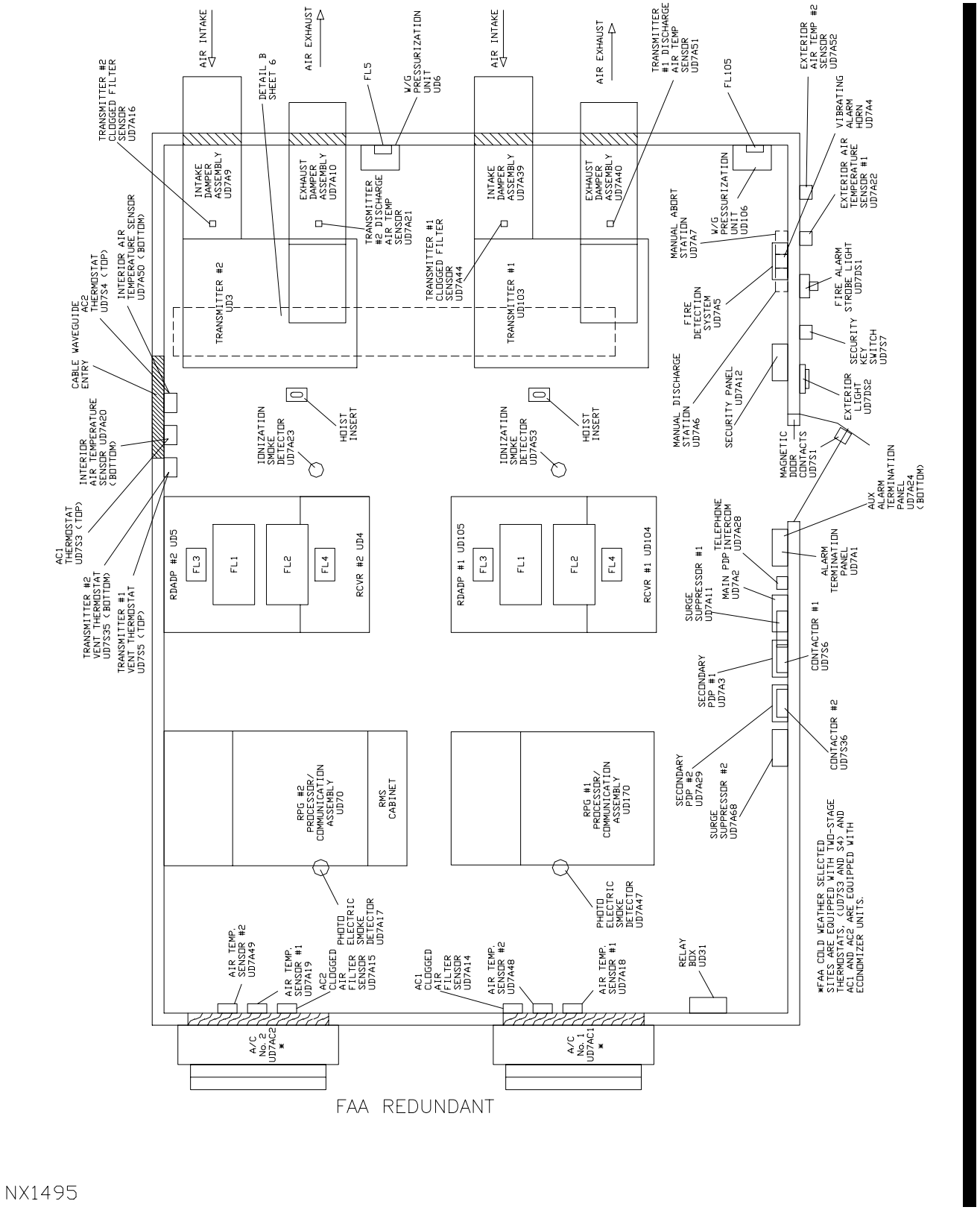

Figure 1–4. Radar Equipment Shelter, Equipment Location Diagram (Sheet 3 of 6)

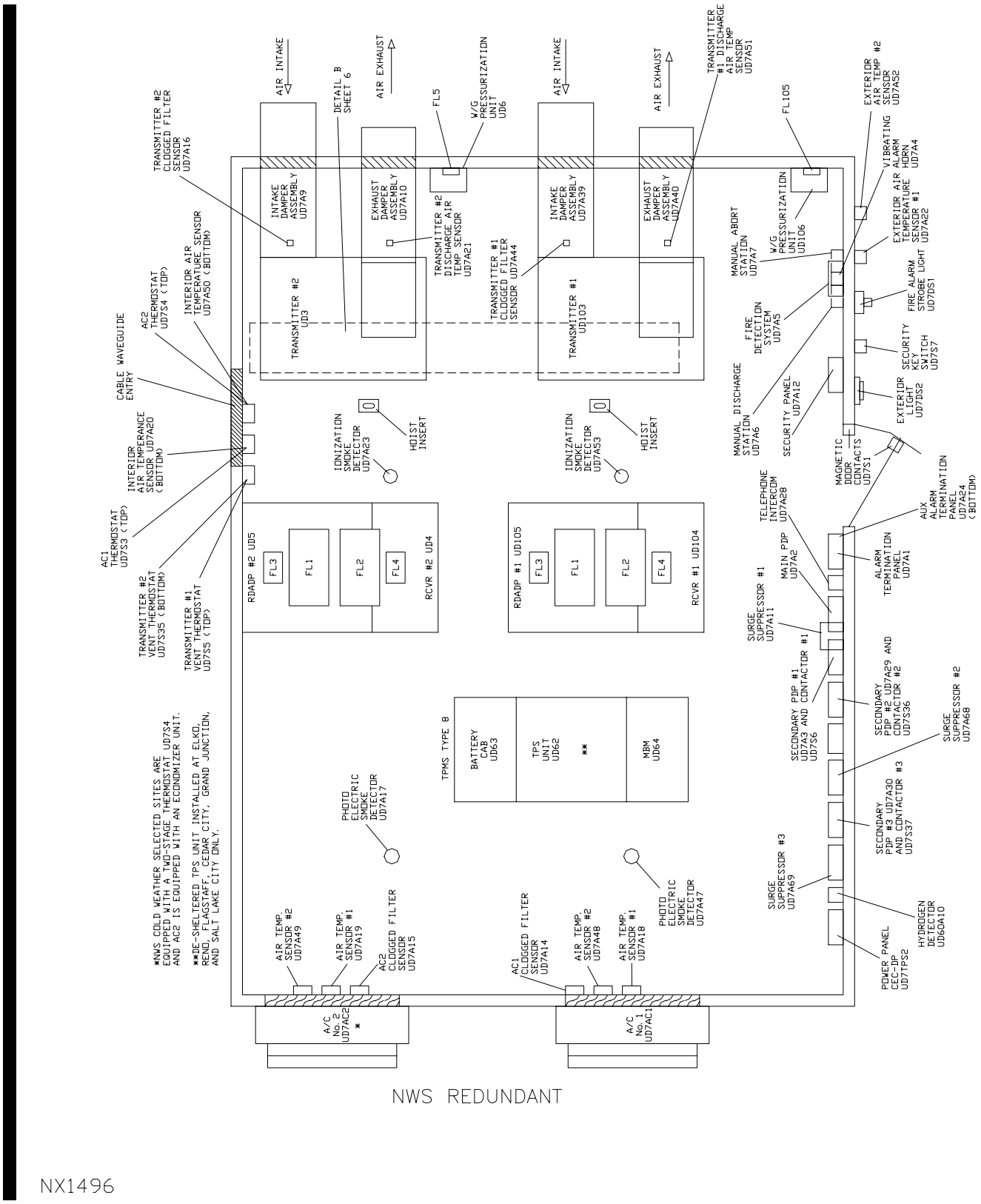

Figure 1–4. Radar Equipment Shelter, Equipment Location Diagram (Sheet 4 of 6)

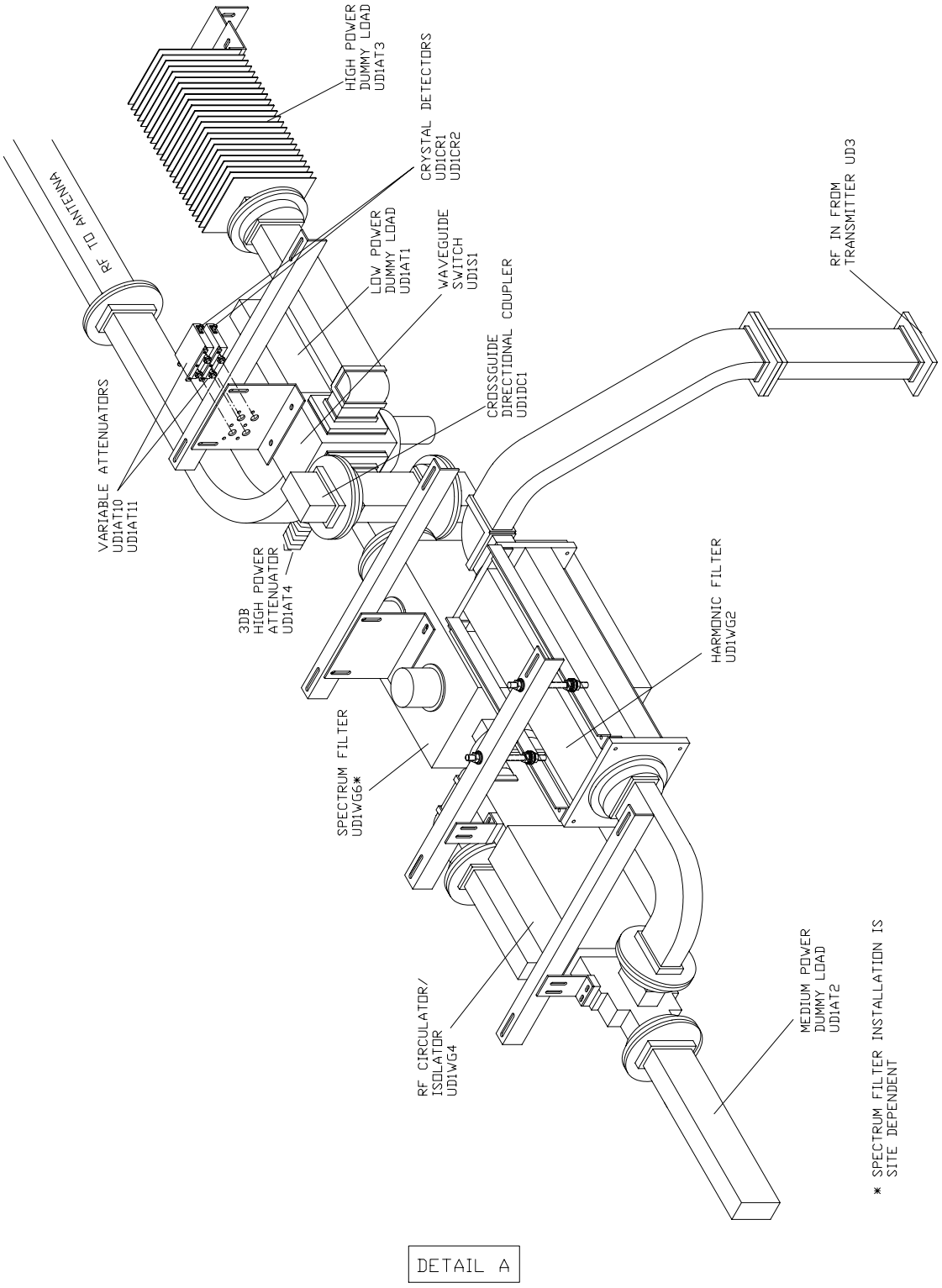

NX1497

Figure 1–4. Radar Equipment Shelter, Equipment Location Diagram (Sheet 5 of 6)

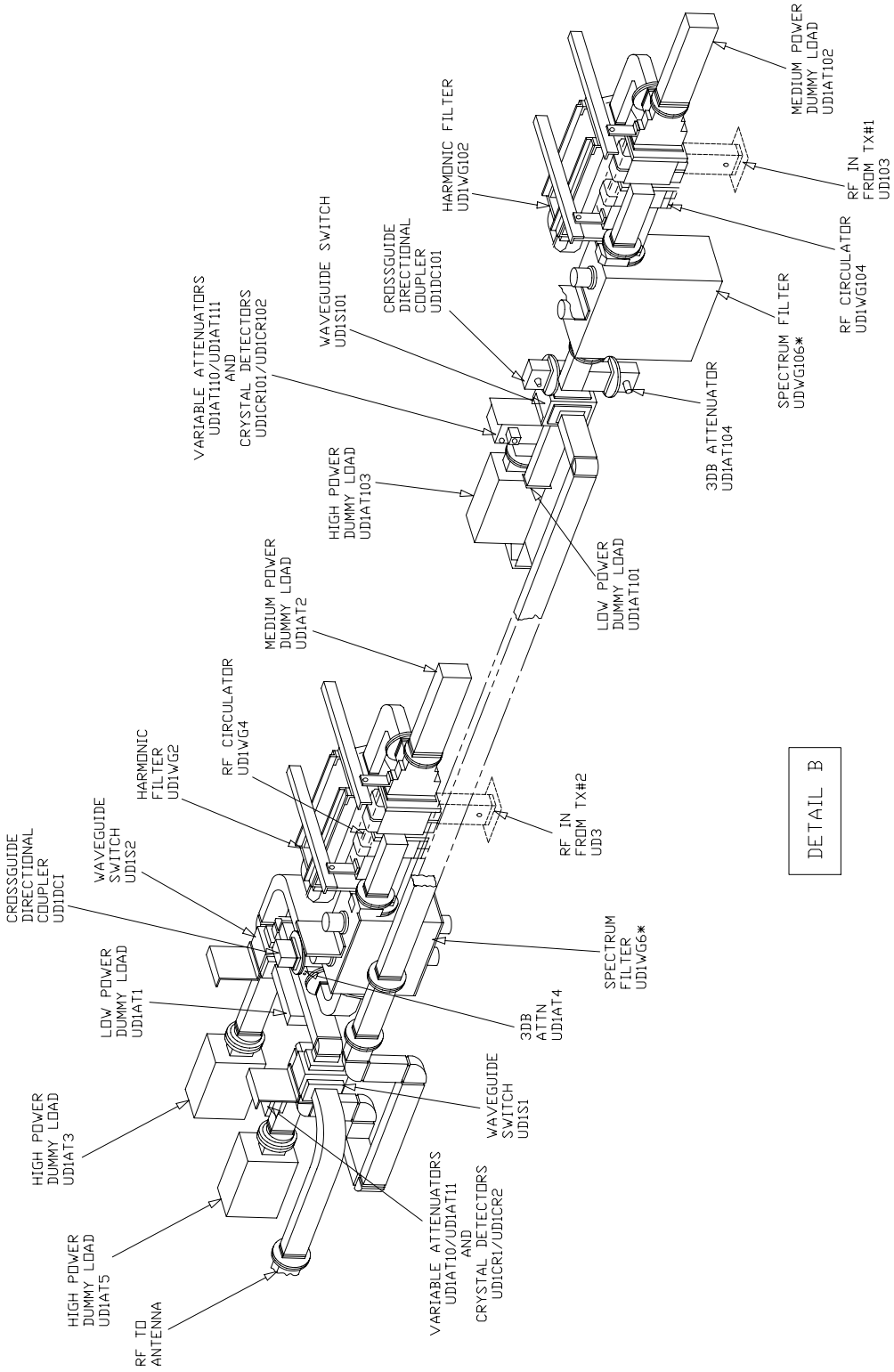

Figure 1–4. Radar Equipment Shelter, Equipment Location Diagram (Sheet 6 of 6)

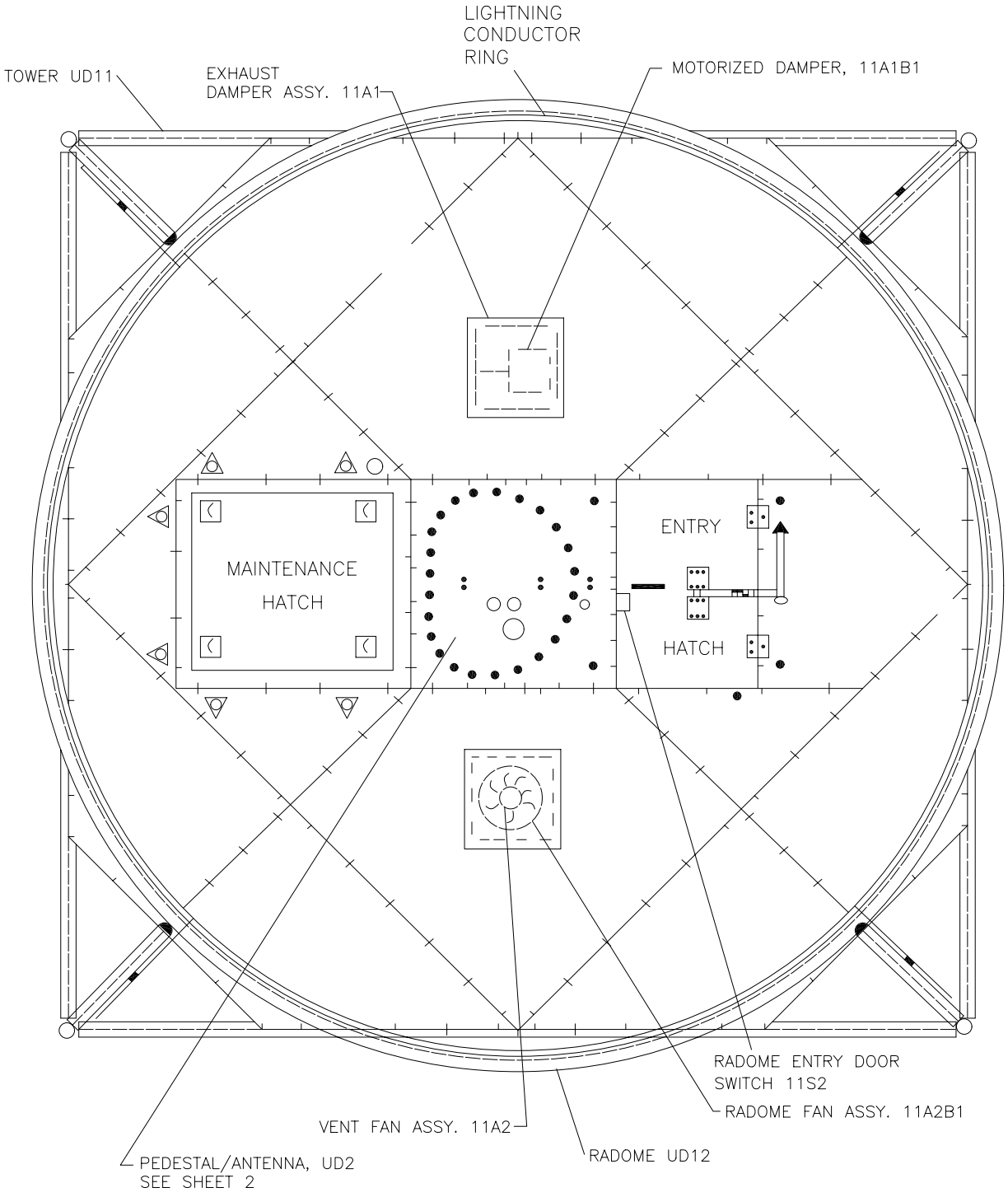

NX1499

Figure 1–5. Radar Tower/Radome, Equipment Location Diagram (Sheet 1 of 2)

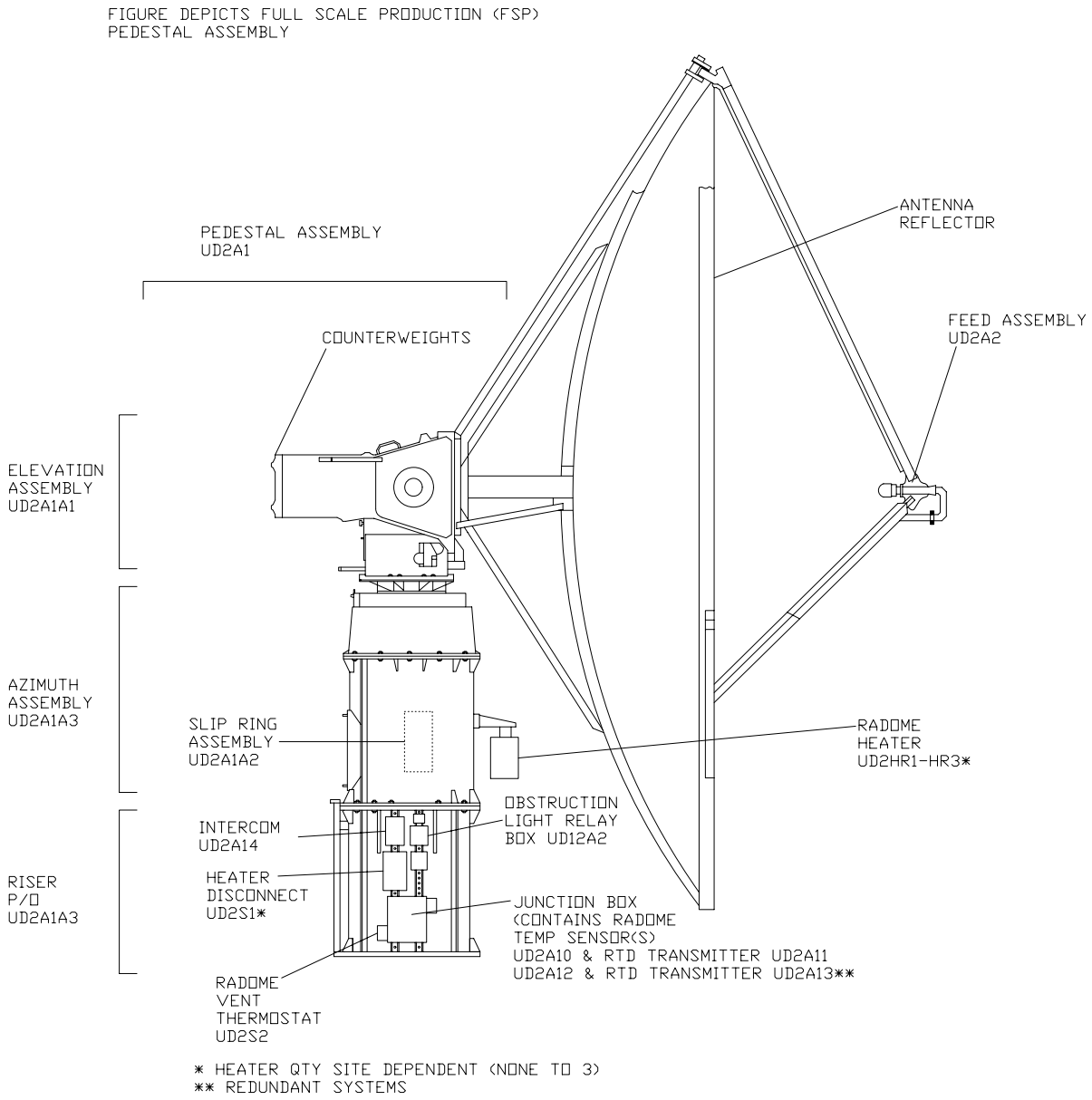

NX1796

Figure 1–5. Radar Tower/Radome, Equipment Location Diagram (Sheet 2 of 2)

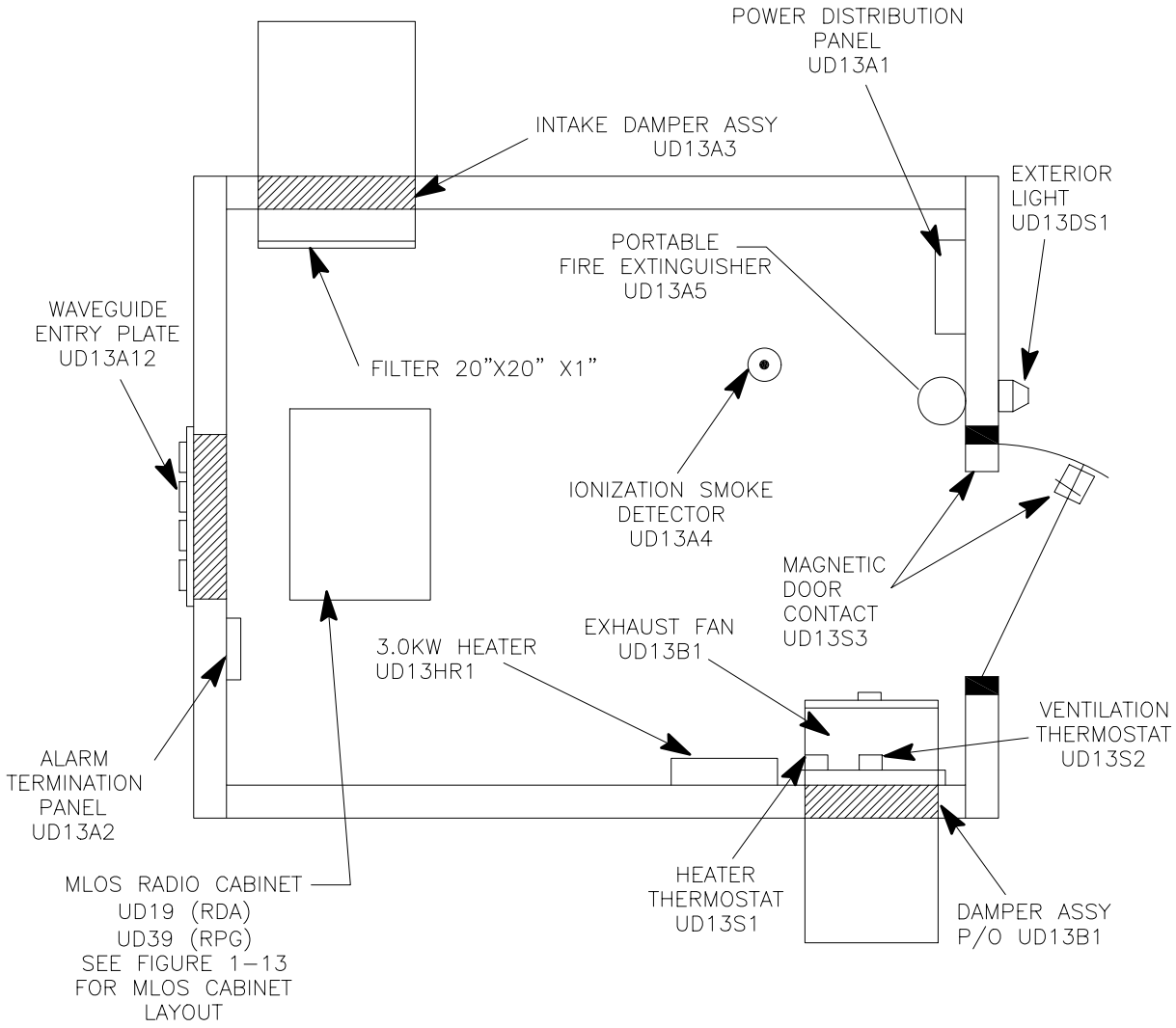

NX1500

Figure 1–6. RDA/RPG MLOS Shelter, Equipment Location Diagram

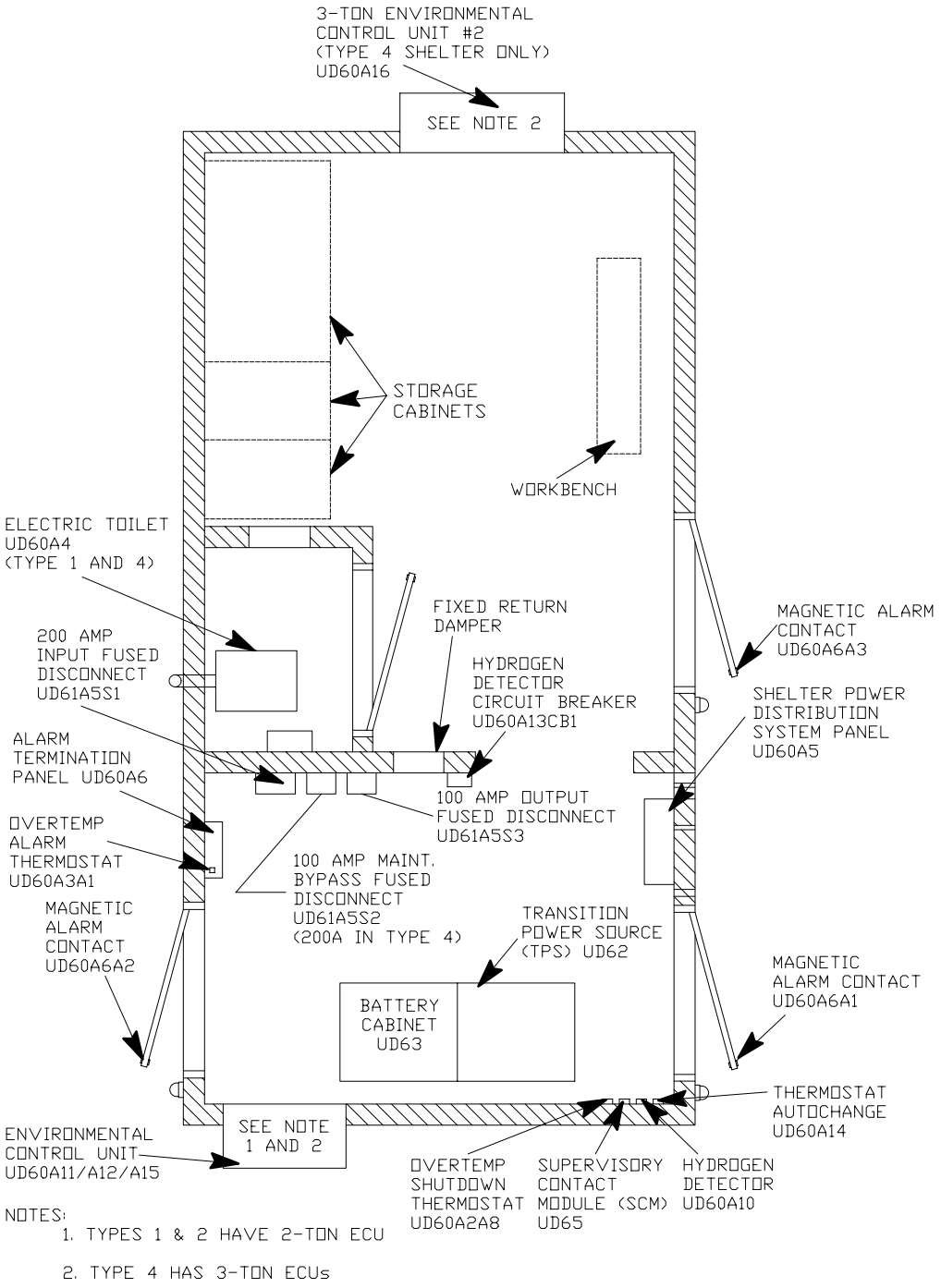

Figure 1–7. Transition Power Maintenance Shelter (Types 1, 2, and 4), Equipment Location Diagram

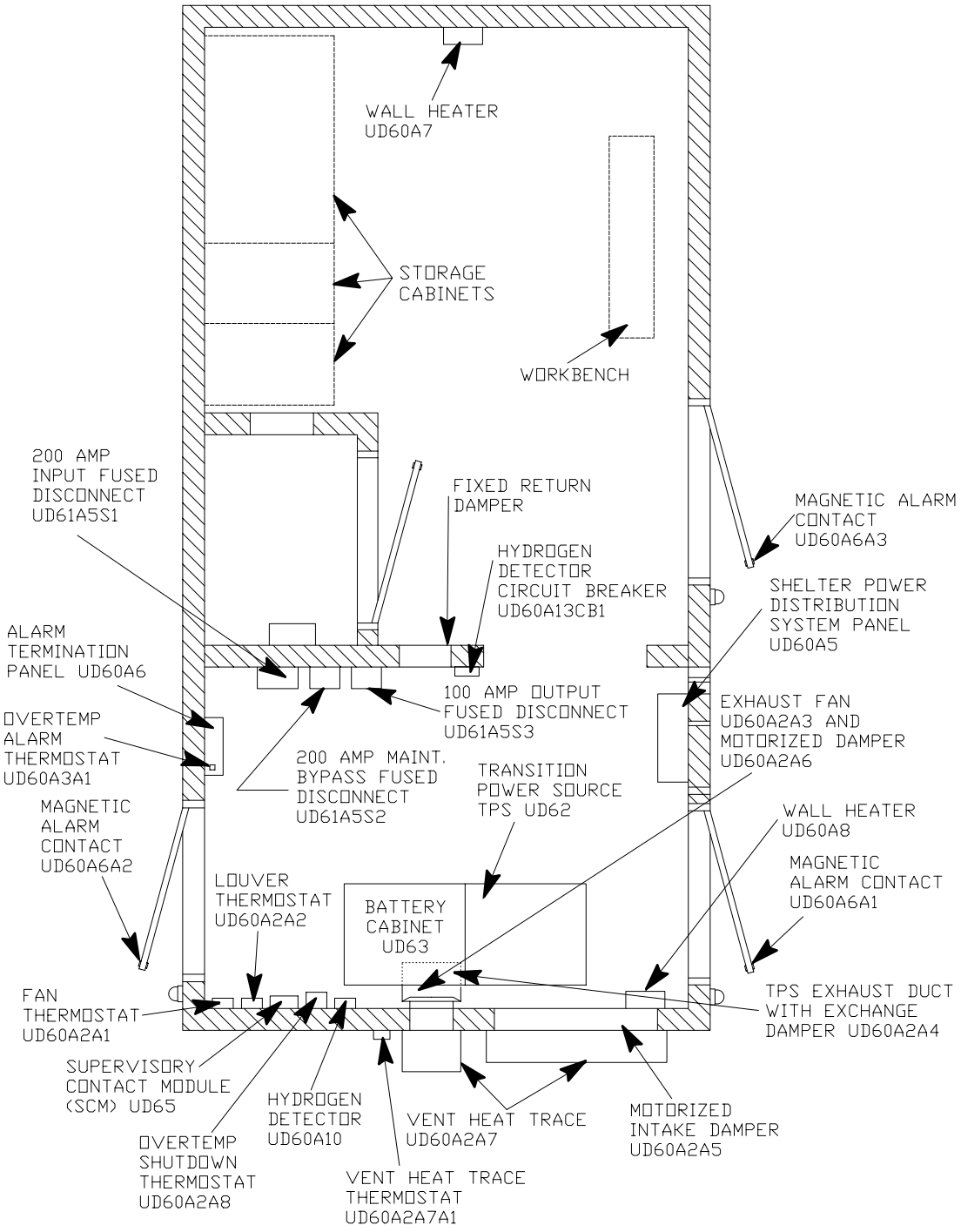

NX1808

Figure 1–8. Transition Power Maintenance Shelter (Type 3), Equipment Location Diagram

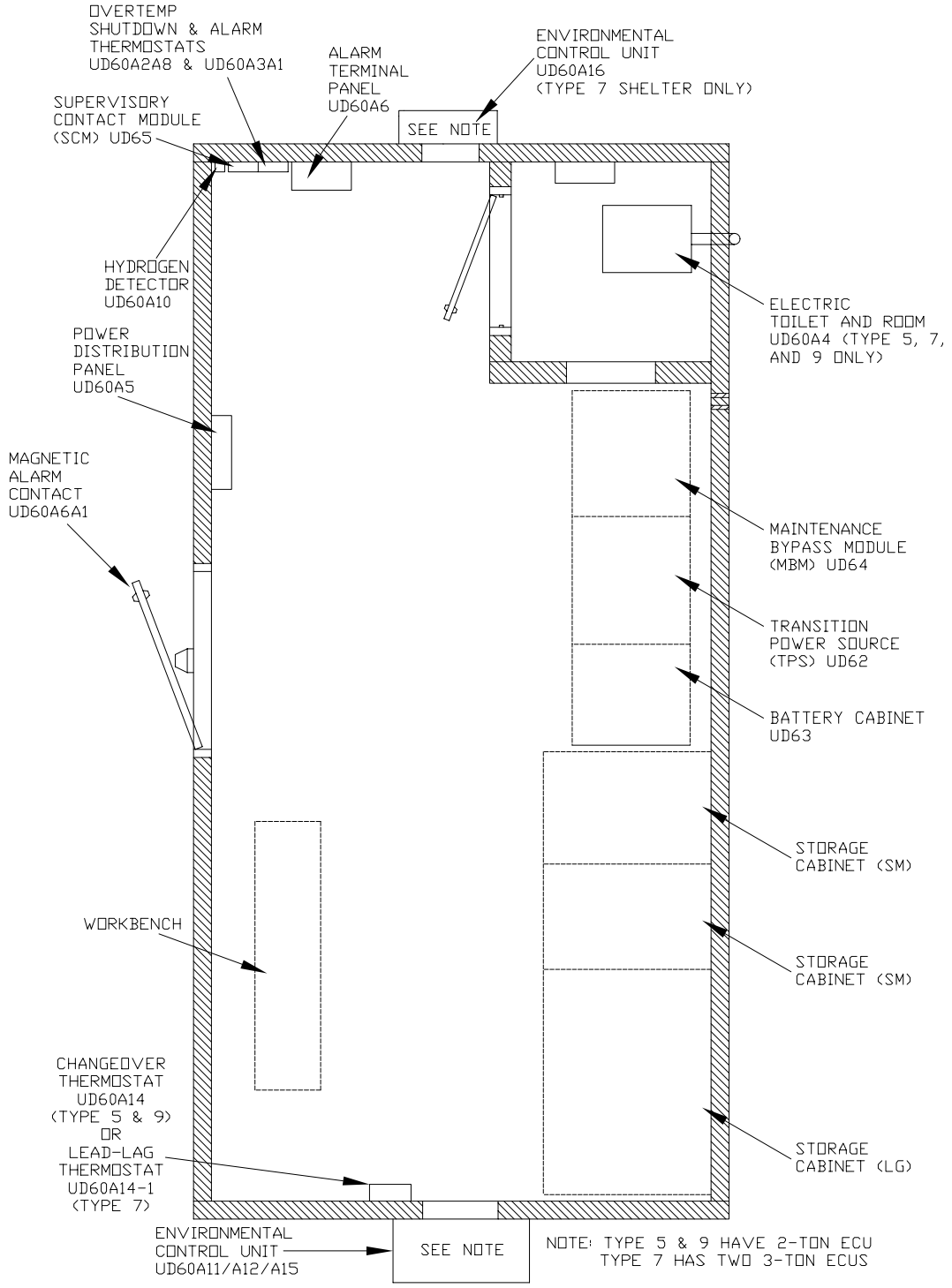

Figure 1–9. Transition Power Maintenance Shelter (Types 5, 7, and 9), Equipment Location Diagram

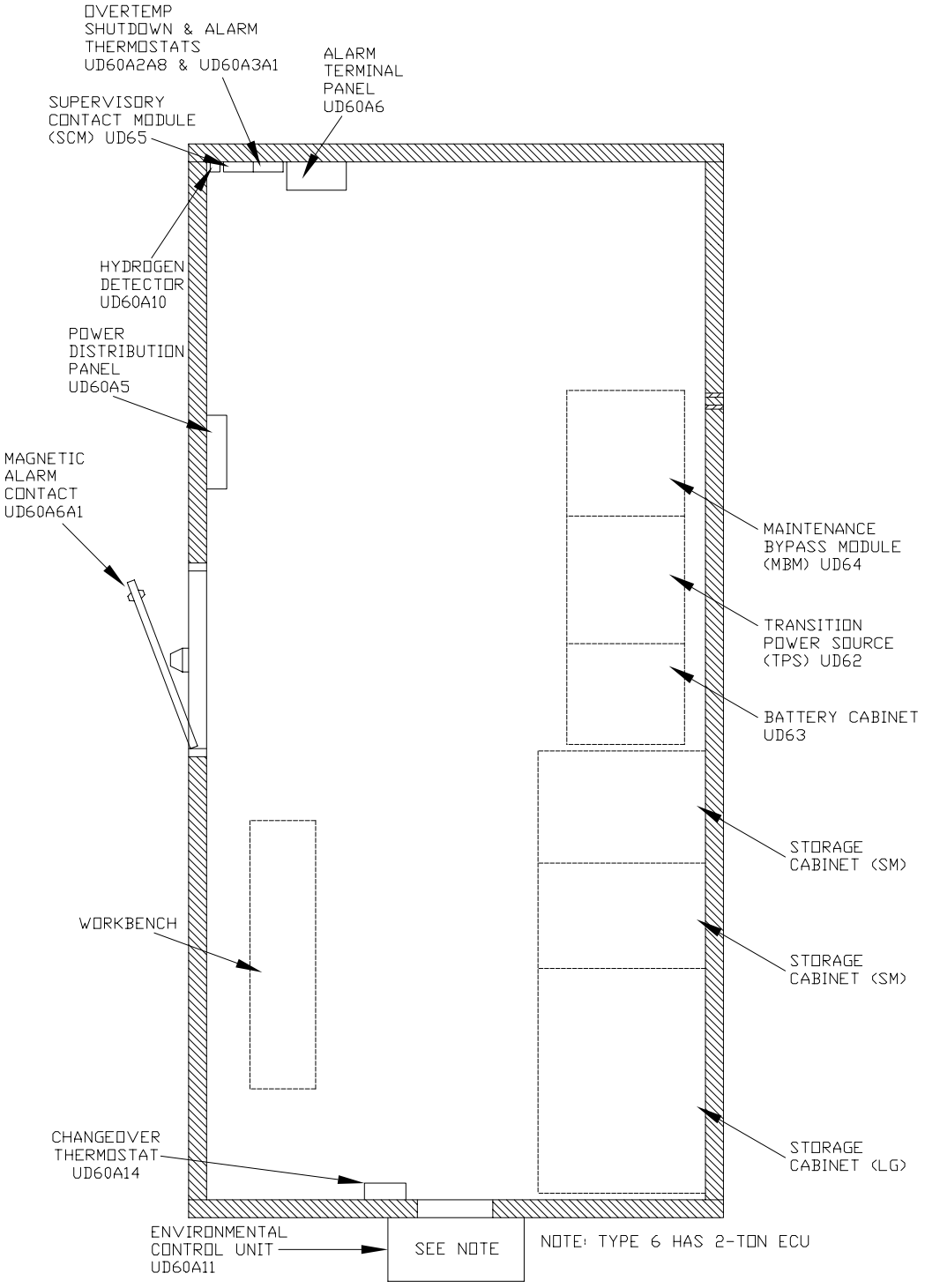

NX2278

Figure 1–10. Transition Power Maintenance Shelter (Type 6), Equipment Location Diagram

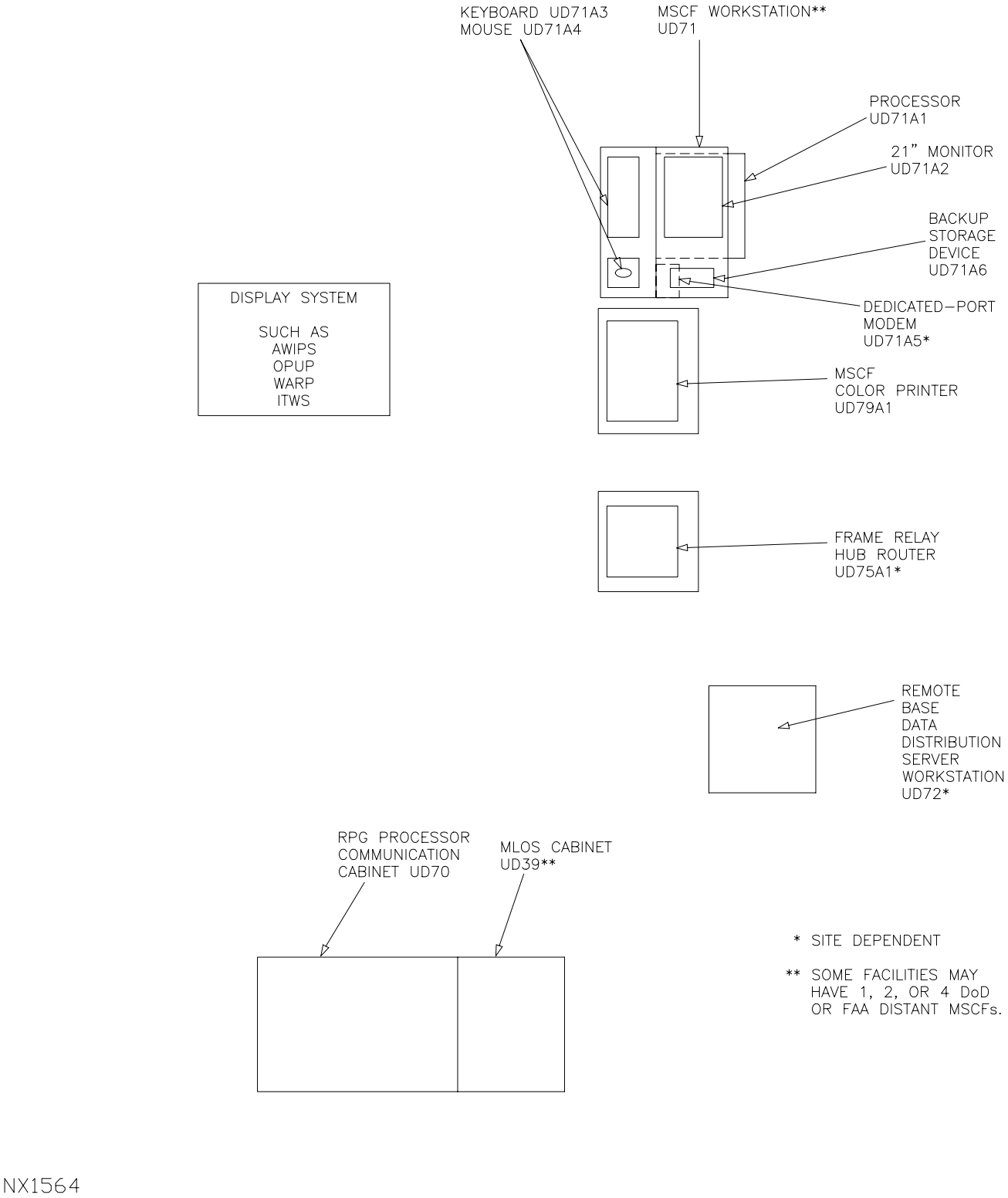

Figure 1–11. Typical User Facility PUP, MSCF, and RPG Equipment Locations

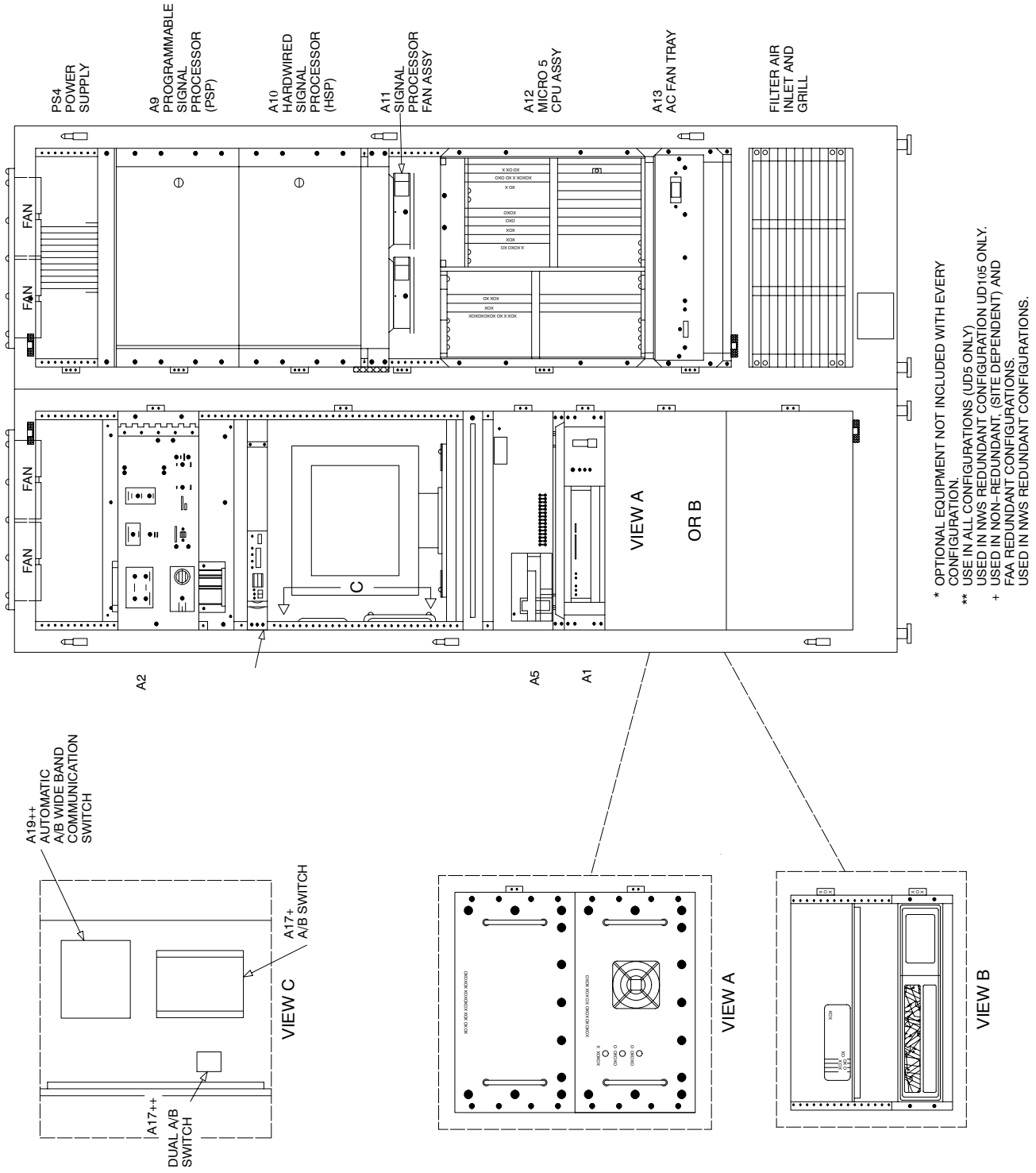

Figure 1–12. RDA Data Processor Cabinet, Equipment Locations (Front View) (Sheet 1 of 2)

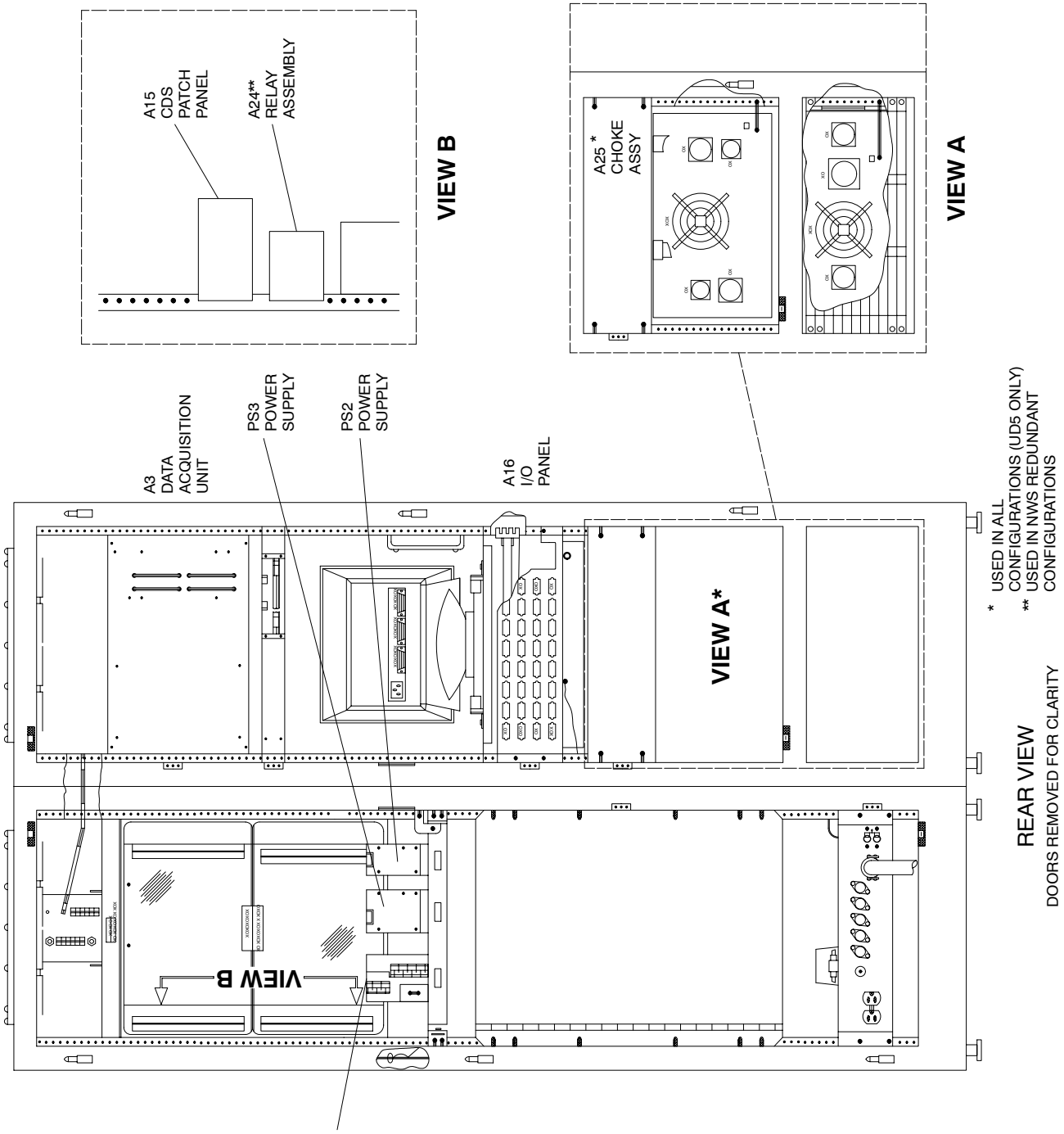

NX1507

Figure 1–12. RDA Data Processor Cabinet, Equipment Locations (Rear View) (Sheet 2 of 2)

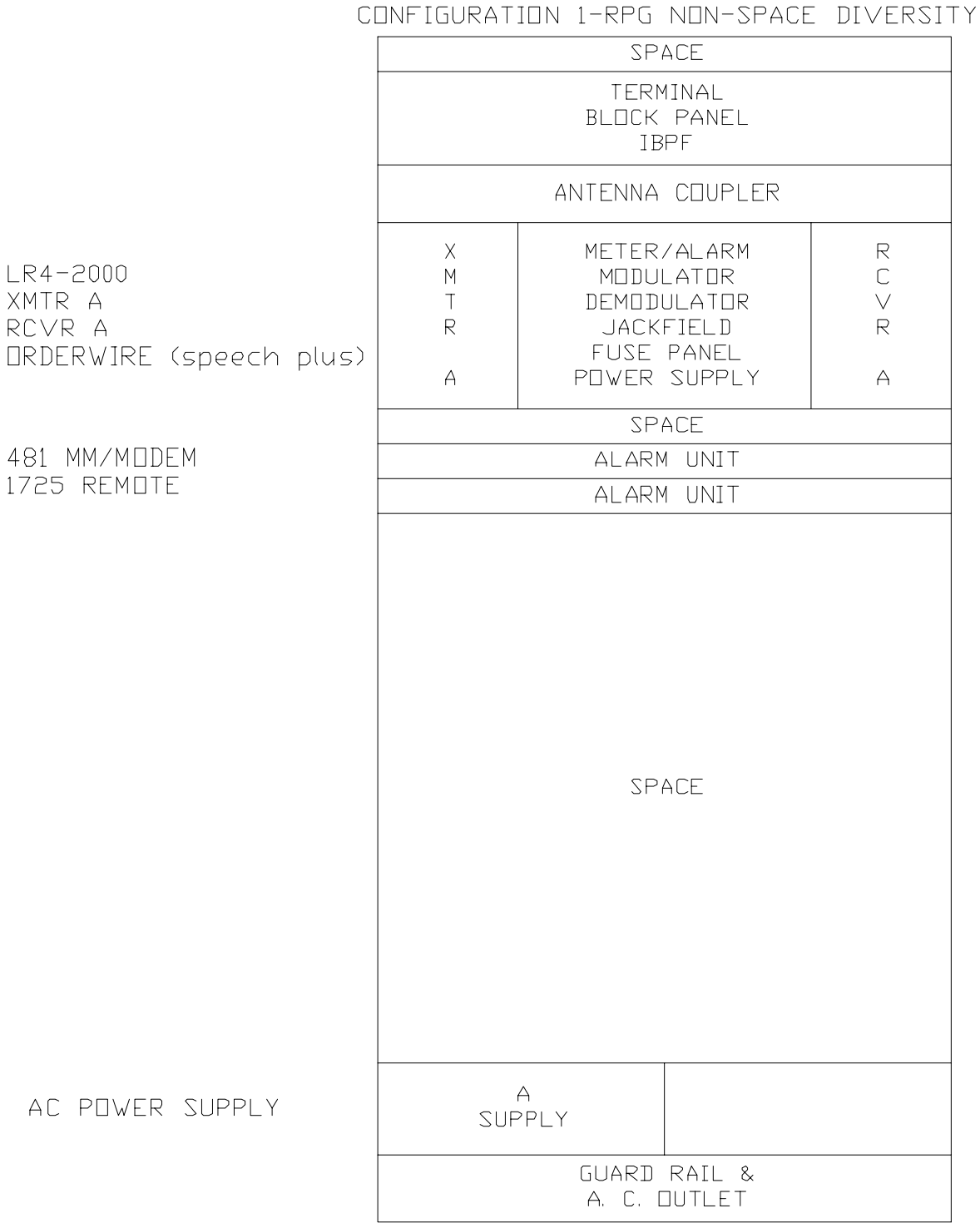

NX2279

Figure 1–13. MLOS Radio Cabinet, Equipment Location (Sheet 1 of 2)

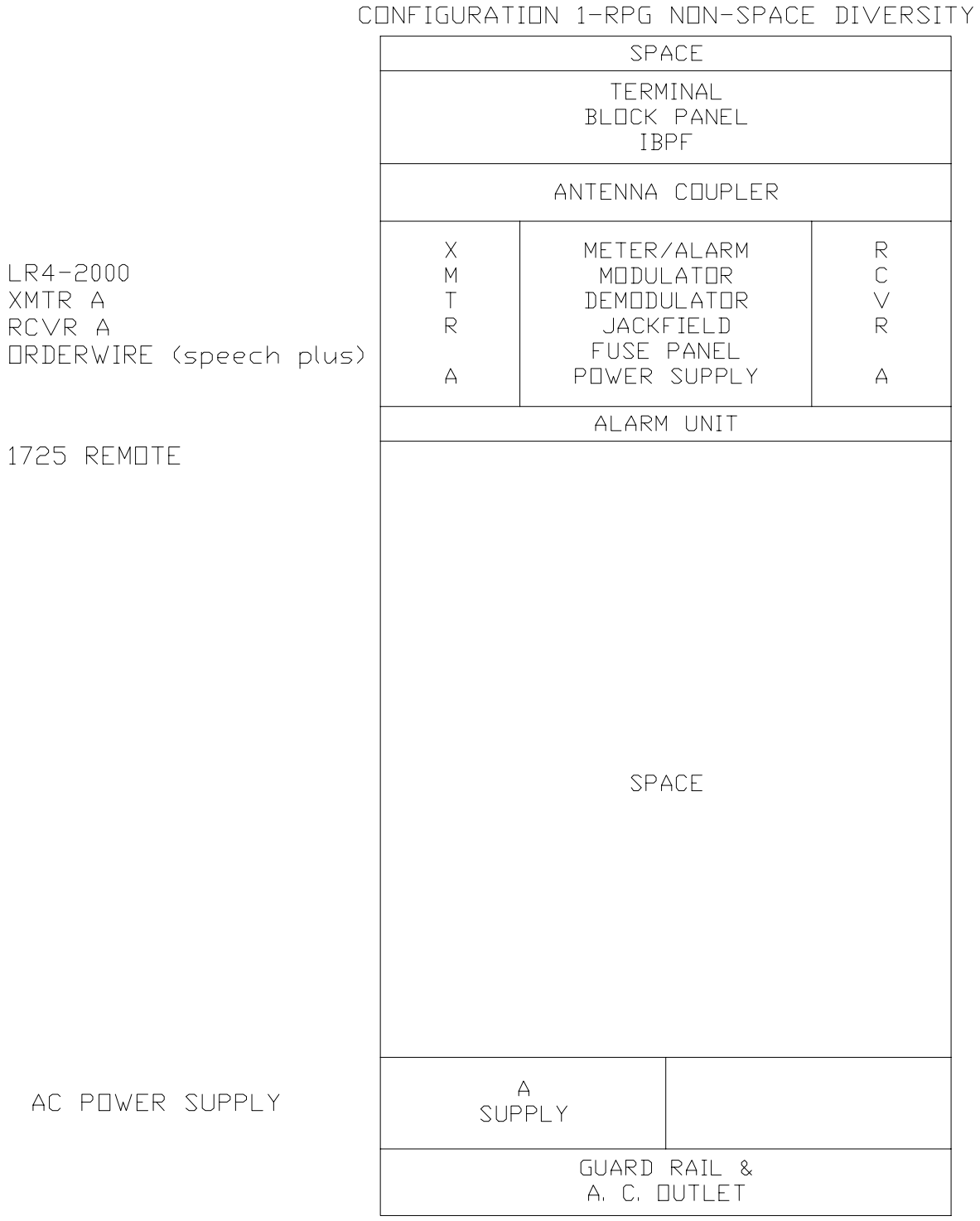

NX2280

Figure 1–13. MLOS Radio Cabinet, Equipment Location (Sheet 2 of 2)

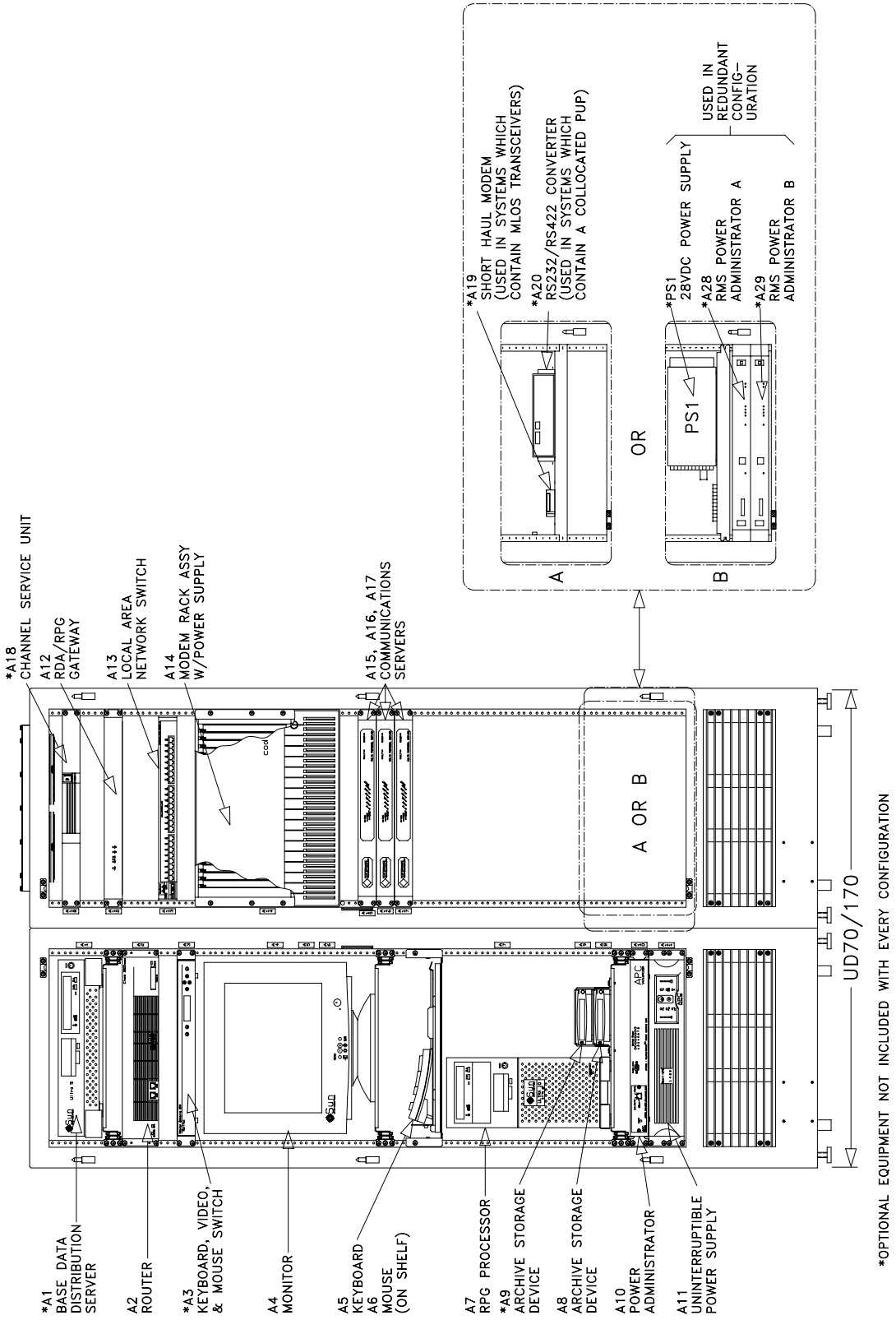

NX1565

Figure 1–14. RPGPCA Cabinet UD70 (Front View) (Sheet 1 of 2)

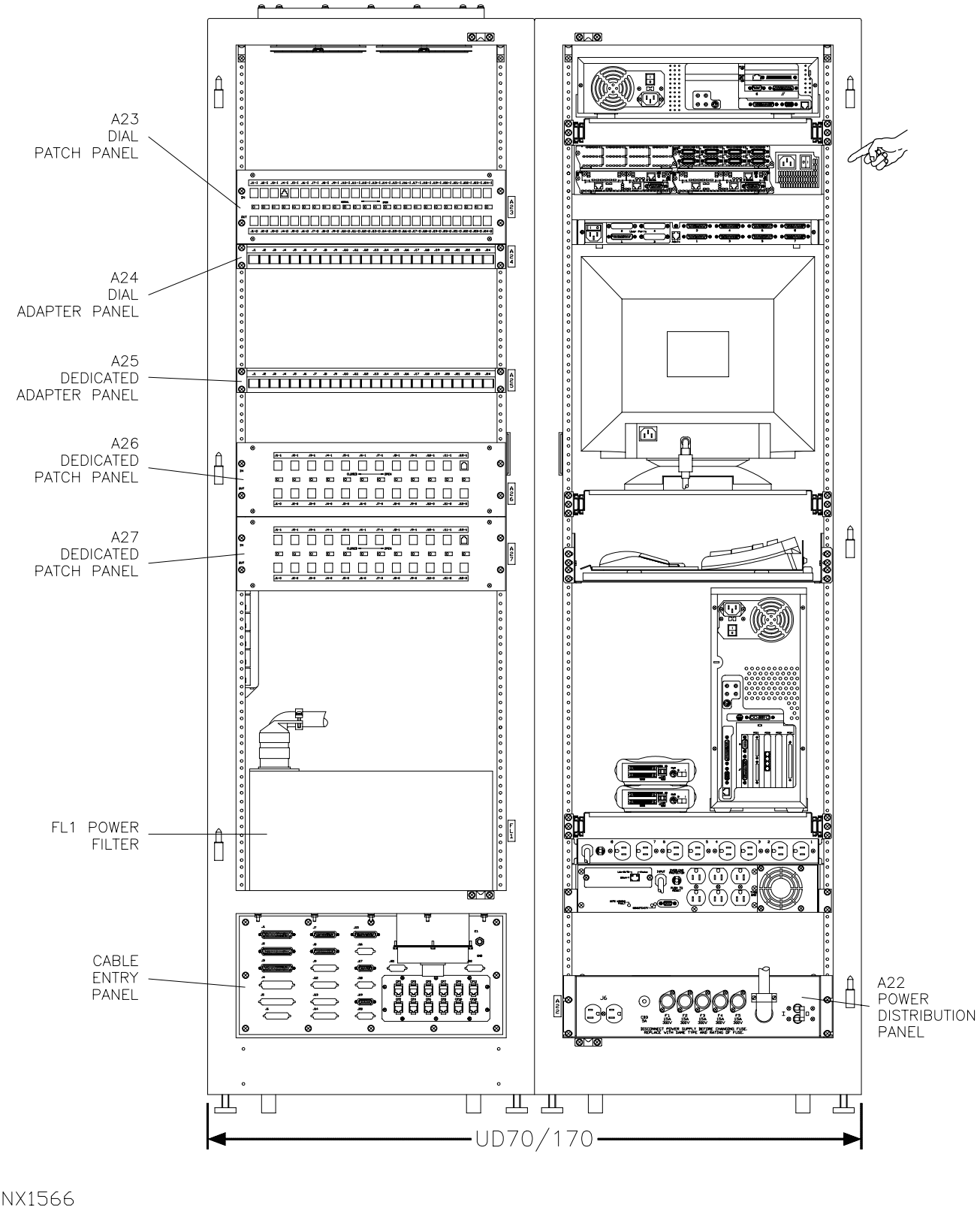

Figure 1–14. RPGPCA Cabinet UD70 (Rear View) (Sheet 2 of 2)

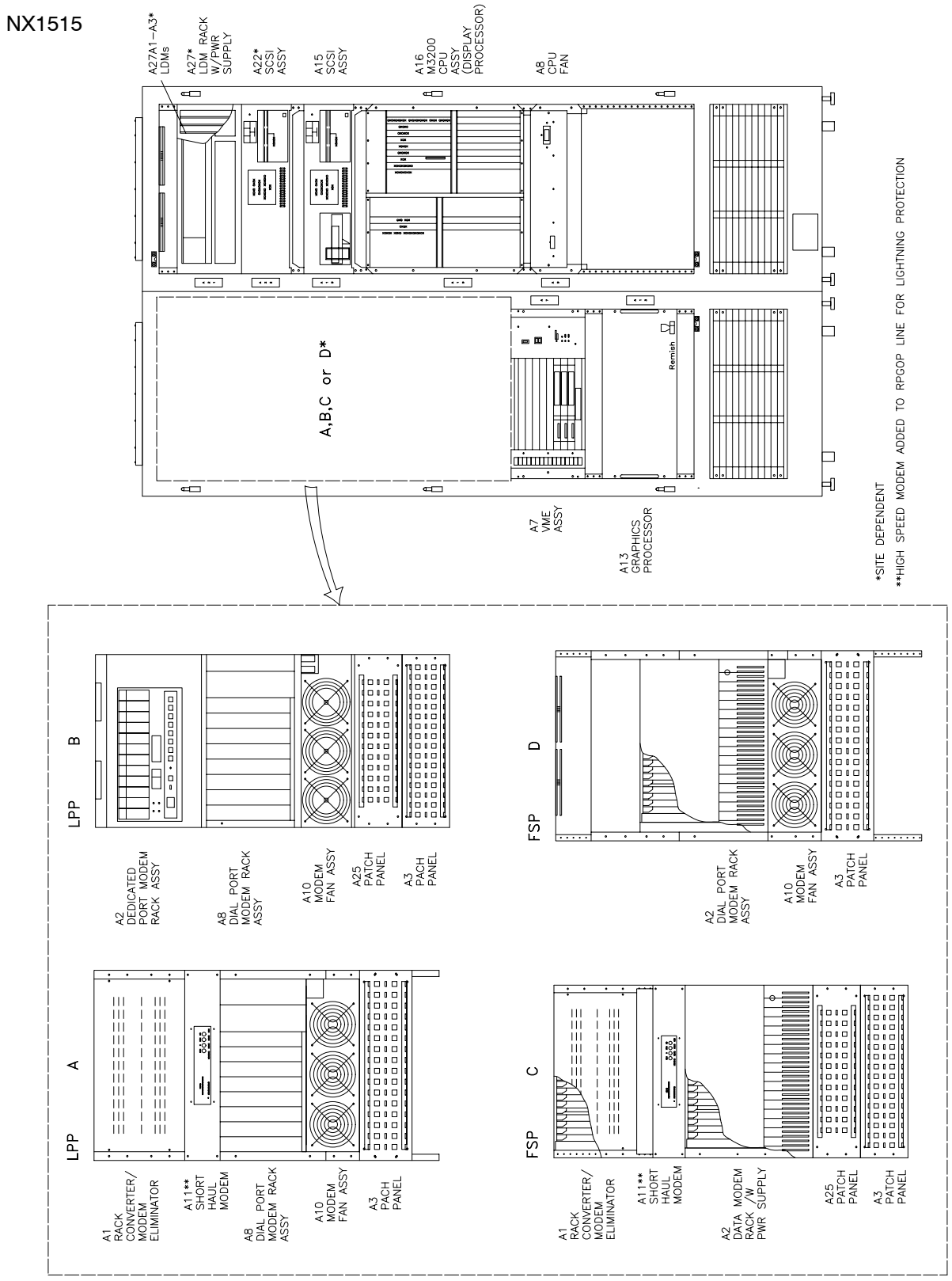

Figure 1–15. PUP Data Processor Cabinet UD41, Front View (Sheet 1 of 2)

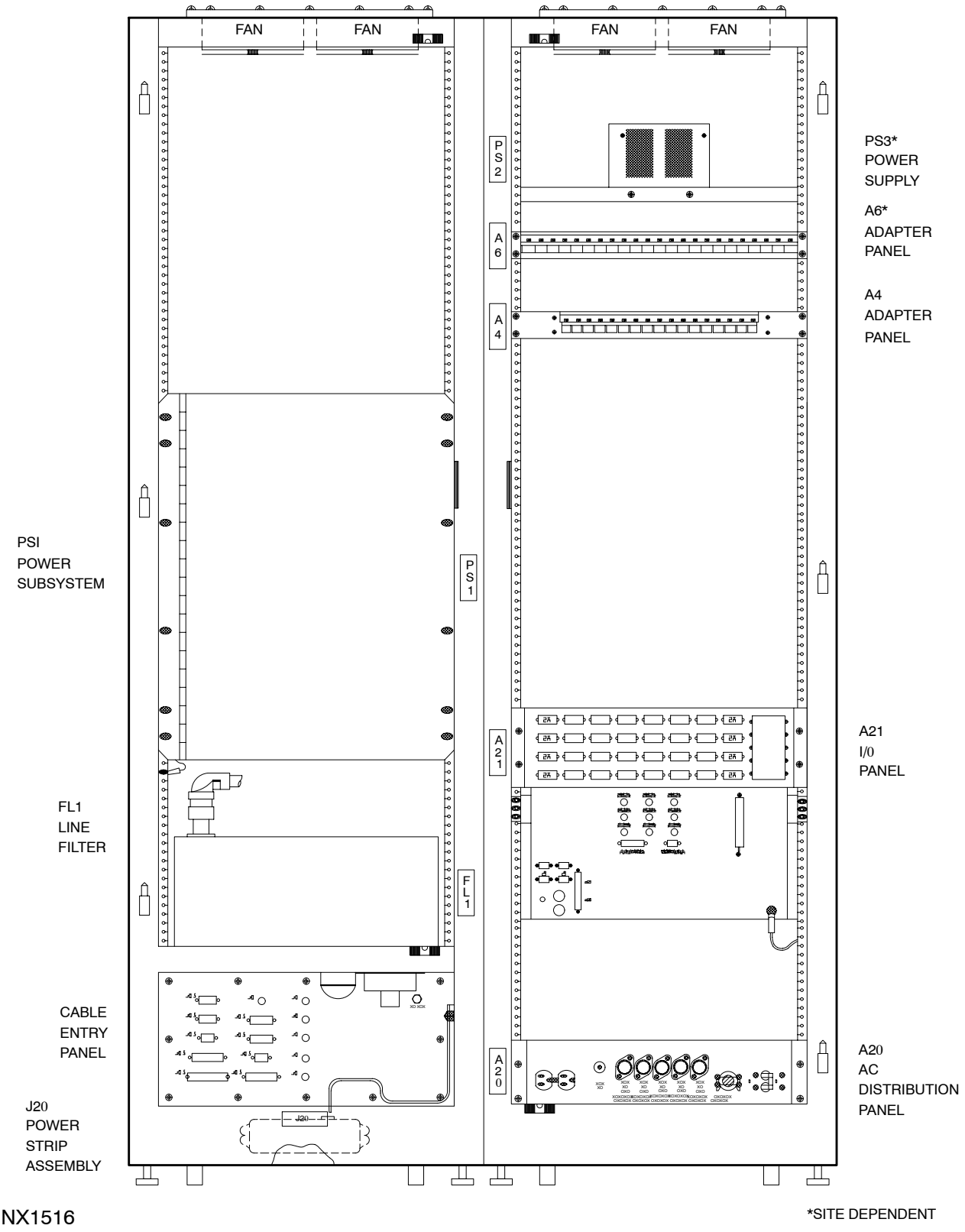

Figure 1–15. PUP Data Processor Cabinet UD41, Rear View (Sheet 2 of 2)

Table 1–2. RDA Physical Characteristics

Equipment	Heat (BTUs)	60 Hz Power Requirements Voltage	Phase	kW	Dimensions Height	Width	Depth	Weight (Pounds)
Antenna/Pedestal, UD2								
Antenna Assembly					28 feet Diameter			2,100
Pedestal Assembly		Note 1			16′8″	48″	48″	21,500
Transmitter Cabinet UD3/UD103	51,200	208	3	15	80″	72″	30″	2,500
Receiver Cabinet UD4/UD104	4,100	120	1	1.2	72″	24″	30″	400
RDA Data Processor Cabinet, UD5/UD105 (Note 2)	10,200 9,900 3,400	208 208 208	3 3 1	3.0 2.9 2.0	79″	48″	32″	1,200
VME Chassis UD5A1		120/208	1	350	3.44″	16.87″	17.25″	
VMEbus to Concurrent I/O Bus Interface (VCI–V) Board UD5A1A1					10.25″	0.79″	7.125″	
VME Wideband Board UD5A1A2, A3					10.25″	0.79″	7.125″	1.5
Channel Service Unit UD5A18		120	1	10	1.75″	6″	11.75″	3

– – – – –

NOTE 1: Pedestal Assembly has no power of its own, power is supplied by one of the UD5 sources.

NOTE 2: UD5 is broken down as

1) Pedestal Electronics
2) RDA Control
3) Signal Processing

Table 1–2. RDA Physical Characteristics (continued)

		60 Hz Power Requirements			Dimensions			
Equipment	Heat (BTUs)	Voltage	Phase	kW	Height	Width	Depth	Weight (Pounds)
Waveguide Pressurization Unit, UD6/UD106	850	120	1	0.25	21″	16″	10″	58
Radome UD12					34′9.6″	38′8″	38′8″	7,500

– – – – –

NOTE 1: Pedestal Assembly has no power of its own, power is supplied by one of the UD5 sources.

NOTE 2: UD5 is broken down as

1) Pedestal Electronics
2) RDA Control
3) Signal Processing

Table 1–3. WBC Physical Characteristics

Equipment	Heat (BTUs)	60 Hz Power Requirements Voltage	Phase	kW	Dimensions Height	Width	Depth	Weight (Pounds)
MLOS Cabinet, UD19	1700				72″	24″	24″	160
MLOS Transceiver					11″	19″	20″	84
MLOS Antenna Coupling Unit					4″	19″	20″	10
MLOS Modem					0.8″	2.2″	2.9″	0.4
MLOS Minimaster Alarm Unit					1.75″	19″	12″	6
MLOS Remote Fault Alarm Station					1.75″	19″	12″	4
MLOS Power Supply LRS–53–24					4.75″	2.4″	8.5″	3.25
MLOS Antenna					Site Selected			
MLOS Tower					Site Selected			
RDA CSU, UD8A29		120	1	10	1.75″	6″	11.75″	3

Table 1–4. RPG Physical Characteristics

Equipment	Heat (BTUs)	60 Hz Power Requirements Voltage	Phase	Watts (average)	Dimensions Height	Width	Depth	Weight (Pounds)
RPG Processor/Communications Assembly Cabinet Equipment		208	3		79″	48″	32″	1500
Base Data Distribution Server (BDDS) (Sun Ultra 5) UD70A1*		120	1	200 (max)	4.31″	17.17″	16.69″	22.4
RPG Router (Cisco) UD70A2		120	1	140 (max)	3.44″	17.5″	15.8″	30
KVM Switch (Raritan) UD70A3*		120	1	23 (max)	1.75″	17.0″	10.5″	6.1
RPG Maintenance Terminal 17 Inch Monitor (Sun) UD70A4		120	1	100	16.26″	16.61″	17.05″	21
RPG Keyboard (Sun) UD70A5					2″	20.5″	7″	2
RPG Mouse (Sun) UD70A6					0.75″	2.5″	3.5″	< 1
RPG Maintenance Terminal Processor (Sun Ultra 10) UD70A7		120	1	250	15.75″	6.93″	16.54″	27
RPG Archive Storage Device (JAZ) UD70A8		120	1	60	1.5″	5.33″	8.0″	2.0
RPG Archive Storage Device (JAZ) (Expansion) UD70A9*		120	1	60	1.5″	5.33″	8.0″	2.0

– – – – –

* Location and/or equipment existence is dependent on site configuration.

** Maximum modems, not included with every configuration.

*** Power draw is dependent upon number of systems it is supporting.

Table 1–4. RPG Physical Characteristics (continued)

Equipment	Heat (BTUs)	60 Hz Power Requirements Voltage	Phase	Watts (average)	Dimensions Height	Width	Depth	Weight (Pounds)
Power Administrator (APC) UD70A10		120	1	***	2.125″	17.0″	6.5″	6.5
Uninterruptible Power Supply (APC) UD70A11		120	1	950*** (max)	3.5″	19.0″	18.0″	63
RDA/RPG Gateway (Polycom) UD70A12		120	1	120 (max)	1.75″	17.5″	6.5″	4.0
Local Area Network Switch (Cisco) UD70A13		120	1	100	3.46″	17.5″	12″	13.8
Dedicated/Dial Modem Rack Assembly UD70A14		120	1	15				
Dual Dial Modems (Codex) UD70A14A1–A5**					0.75″	8.0″	14.5″	1.5
Dedicated Modems (Codex) UD70A14A6–A21**					0.75″	8.0″	14.5″	1.5
Communication Server (PTI) UD70A15, A16, A17		120	1	120 (max)	1.55″	16.8″	10.45″	9.8
Channel Service Unit (CSU) UD70A18*		120	1	4.3	1.72″	6.8″	10.5″	2.0
Short Haul Modem UD70A19*					0.8″	2.1″	2.7″	0.4

– – – – –

* Location and/or equipment existence is dependent on site configuration.

** Maximum modems, not included with every configuration.

*** Power draw is dependent upon number of systems it is supporting.

Table 1–4. RPG Physical Characteristics (continued)

Equipment	Heat (BTUs)	60 Hz Power Requirements Voltage	Phase	Watts (average)	Dimensions Height	Width	Depth	Weight (Pounds)
RS–232/RS–422 Converter UD70A20 (NWS System Only)					2.1″	8.8″	11.5″	2
RMS Power Administrator (Baytech) UD70A28, UD70A29 (FAA Systems Only)		120	1	1800*** (max)	1.72″	16.73″	6.17″	4.25
Relay Box Power Supply UD70PS1 (FAA Systems Only)		120	1	30	5″	10.5″	3.75″	8
Remote BDDS Equipment								
Remote BDDS Processor (Sun Ultra 5) UD72A1*		120	1	200	4.31″	17.17″	16.69″	22.4
Remote 17 Inch Monitor (Sun) UD72A2*		120	1	100	16.26″	16.61″	17.05″	21
Remote Keyboard (Sun) UD72A3*					2″	20.5″	7″	2
Remote Mouse (Sun) UD72A4*					0.75″	2.5″	3.5″	< 1
Remote BDDS Table UD72MP1*					55.25″	31.0″	30.0″	109
Remote Local Area Network Switch (Cisco) UD73*		120	1	100	3.46″	17.5″	12″	13.8
Remote Router (Cisco) UD74A1*		120	1	72 (max)	1.69″	17.5″	11.8″	8

– – – – –

* Location and/or equipment existence is dependent on site configuration.

** Maximum modems, not included with every configuration.

*** Power draw is dependent upon number of systems it is supporting.

Table 1–5. MSCF Physical Characteristics

Equipment	Heat (BTUs)	60 Hz Power Requirements Voltage	Phase	Watts (avg.)	Dimensions Height	Width	Depth	Weight (Pounds)
MSCF Equipment								
MSCF Processor (Sun Ultra 5) UD71A1		120	1	200	4.31″	17.17″	16.69″	22.4
21 Inch Monitor (Sun) UD71A2		120	1	160 (max)	19.78″	19.70″	18.76″	68.2
Keyboard (Sun) UD71A3					2″	20.5″	7″	2
Mouse (Sun) UD71A4					0.75″	2.5″	3.5″	< 1
Dedicated Port Modem (Codex) UD71A5*					2.39″	6.7″	9.6″	2
Backup Storage Device (JAZ) UD71A6		120	1	60	1.5″	5.33″	8.0″	2.0
MSCF Stand UD71MP1					30″	48″	24″	80
Frame Relay Hub Router (Cisco 2621XM) (UD75A1)		120	1	72 (Max)	3.44″	17.5″	15.8″	10.25
Color Printer (Xerox/Tektronix) UD79A1		120	1	380 (idle)	18.3″	20.0″	19.7″	94
Printer Stand UD79MP1					27″	30″	24″	20

– – – – –

* Location and/or equipment existence is dependent on site configuration.

** Maximum modems, not included with every configuration.

*** Power draw is dependent upon number of systems it is supporting.

Table 1–6. PUP Physical Characteristics

Equipment	Heat (BTUs)	60 Hz Power Requirements Voltage	Phase	kW	Dimensions Height	Width	Depth	Weight (Pounds)
PUP Data Processor	18,248	208	3	3.0	79″	48″	32″	1,200
Cabinet, UD41 (Single Phase Option)		208	1	3.0				
Dedicated Port Modem UD41A2*		120	1	24	2.76″	8.27″	13.78″	8
Dial Port Modem (Codex 226X), UD41A6*		120	1	45	3″	8.5″	16″	7
VME Chassis UD41A7		120/208	1	350	8.75″	16.87″	17.25″	
VMEbus to Concurrent I/O Bus Interface (VCI–V) Board, UD41A7A1					10.25″	0.79″	7.125″	
VME Narrowband Board, UD41A7A2–A4					10.25″	0.79″	7.125″	1.5
System Console, UD42	340	120	1	50				
Monitor					14.5″	13″	14.5″	25
Keyboard					2″	19″	7″	2
Application Terminal,UD43 (Note 1)		120	1	55				
Monitor					14.5″	13″	14.5″	25
Keyboard					2″	19″	7″	2

– – – – –

NOTE 1: PUP Workstation includes UD43, 44, 45, and 46.

NOTE 2: Use for PUP Workstation Extension only.

* Location and/or equipment existence is dependent on configuration.

Table 1–6. PUP Physical Characteristics (continued)

Equipment	Heat (BTUs)	60 Hz Power Requirements Voltage	Phase	kW	Dimensions Height	Width	Depth	Weight (Pounds)
Graphics Tablet, UD44 (Note 2)		120	1	84	1.5″	18″	18″	3
Graphic Display Assembly, UD45								
Monitor		120	1	140/175	25.25″	19″	28″	63
Limited Distance Modems, UD45(A3–A5) (Note 2)		120	1	5	1.56″	6.62″	9.54″	1.8
Audible Alarm, UD46 (Note 1)		120	1	50	3.25″	7.00″	14.50″	8.0
Graphics Printer, UD47		120	1	235	12.7″	35″	21.25″	99
RGBS Line Driver/Equalizer (Note 2)		120	1	2.7	2.0″	3.6″	3.0″	0.5
Workstation	2,940				27″	78″	33″	215
Table Hardcopy Device (Note 1)					27″	30″	24″	20

– – – – –

NOTE 1: PUP Workstation includes UD43, 44, 45, and 46.

NOTE 2: Use for PUP Workstation Extension only.

* Location and/or equipment existence is dependent on configuration.

Section 1−3. Capabilities and Limitations

1−3.1 INTRODUCTION.

This section provides data on the WSR−88D operational characteristics and capabilities at both the system and equipment group levels. The data is presented in tabular format for ease of look−up. Refer to Section 1−2 for equipment power requirements and dimensional data.

1−3.2 WSR−88D SYSTEM CAPABILITIES.

1−3.2.1 Operational Modes. The WSR−88D system is capable of operation in the precipitation and clear air modes (described in paragraph 1−3.2.1.1 and 1−3.2.1.2). To implement the operational modes, the WSR−88D employs a set of pre−defined volume coverage patterns (VCPs) to collect radar data. Each VCP is composed of specific antenna scan strategies and specific transmitted waveforms with corresponding pulse repetition interval (PRI) patterns. (Described in paragraphs 1−3.2.1.3 and 1−3.2.1.4.)

1−3.2.1.1 Precipitation Mode. The precipitation mode has a variable scan rate to accommodate the greatest number of elevation angles possible in sampling the total radar volume.

1−3.2.1.2 Clear Air Mode. The clear air mode is oriented toward gathering data which will facilitate the detection of precursors to the development of precipitation activity. The clear air mode scan pattern uses slower scan rates than the precipitation mode to provide increased sensitivity.

1−3.2.1.3 Scan Strategies. The scan strategies are made up of a set of constant elevation cuts, each one being a single full rotation of the antenna's 0.95° pencil beam (in azimuth) at a discrete elevation angle. Three scan strategies are provided below.

1−3.2.1.3.1 Scan Strategy 1. Fourteen unique elevation angles from the base elevation angle to +20° in elevation for a volume scan time of 5 minutes. The lowest 6° of elevation have no gaps between adjacent elevation scans. (Used in precipitation mode.)

1−3.2.1.3.2 Scan Strategy 2. Nine unique elevation angles from the base elevation angle to +20° in elevation for a volume scan time of 6 minutes. The lowest 4° of elevation have no gaps between adjacent elevation scans. (Used in precipitation mode.)

1−3.2.1.3.3 Scan Strategy 3. Five unique elevation angles from the base elevation angle to +5° in elevation for a volume scan time of 10 minutes. There are no gaps between adjacent elevation scans. (Used in clear air mode.)

1−3.2.1.4 Pulse Waveform Patterns. The pulse waveforms patterns are characterized into three different categories: contiguous surveillance (CS), contiguous Doppler (CD), and batch (B).

1−3.2.1.4.1 Contiguous Surveillance Waveforms. The CS waveforms use a long PRI and are range−unambiguous at low elevation angles where maximum clutter suppression is required.

1−3.2.1.4.2 Contiguous Doppler Waveforms. The CD waveforms use a shorter PRI and have fewer velocity ambiguities than the surveillance waveforms. The Doppler waveforms are used at the

lowest two elevation cuts in conjunction with the surveillance waveform (split–cut processing), and by themselves at high elevation angles where they are range–unambiguous.

1–3.2.1.4.3 Batch Waveforms. The batch waveforms, used at mid–elevations, combine alternating groups of surveillance (long PRI) and Doppler (short PRI) pulses to produce radial velocity, spectrum width, and reflectivity. The batch waveforms do not provide full clutter suppression.

There are eight basic pulse repetition intervals, each with five variant "delta" PRIs. Refer to NWS EHB 6–526, Appendix A for further discussion.

1–3.2.2 System Capability Summary. Table 1–7 through Table 1–13 summarize the WSR–88D system capabilities:

- Table 1–7 summarizes the principal functions of the RDA, RPG, MSCF, and PUP equipment groups
- Table 1–8 provides a summary of the overall WSR–88D system capabilities
- Table 1–9 correlates the capabilities provided for the control of the WSR–88D system via the RDA, RPG, MSCF, and PUP
- Table 1–10 provides the system response times to operator actions as requested
- Table 1–11 lists the WSR–88D system weather products
- Table 1–12 lists the WSR–88D configurations
- Table 1–13 identifies the WSR–88D system operational environmental conditions

Figure FO1–5 depicts the radar coverage pattern.

1–3.2.3 System Configuration. The RDA, RPG, and PUP equipment groups comprising the WSR–88D can be configured in several ways:

- Separate RDA; collocated RPG/PUP (NWS)
- Collocated RDA/RPG; separate PUP (DoD)
- Redundant, collocated RDA/RPG; separate PUP (FAA)
- Redundant RDA; collocated RPG/PUP (NWS)

In a redundant FAA system, all RDA and RPG equipment including any wideband and narrowband communications, but excluding the antenna, pedestal, tower, and backup power generator are provided redundantly. The point for recombining the redundant channels is the output of the RPG narrowband communications ports. The distant MSCF is in the same building as the controlling user's site. The MSCF functions of both channels are combined into one and made available at a single console for full status reporting, alarms, and control. A selection capability is provided at the MSCF to bring either channel to standby (controlled shutdown state) or full operation, regardless of the state of the other channel.

1–3.2.4 System Expandability. RDA, RPG, and PUP processing and communication equipment capabilities are expandable as follows:

1–3.2.4.1 RDA Expandability.

- Second wideband port

1–3.2.4.2 RPG Expandability.

- Multiple BDDS clients
- Processing capacity: 3 times
- Global main memory: 3 times
- Direct access mass storage devices: 3 times
- Maximum of 24 narrowband ports (mixture of up to 16 dedicated and up to 8 dial)
- Archival storage devices: 2 times

1–3.2.4.3 PUP Expandability.

- Processing capacity: 2 times
- Global main memory: 2 times
- Direct access mass storage devices: 2 times
- Dial–out ports to RPG: 8
- Dedicated ports (14,400 bps) to associated RPG: 2
- Archival storage devices: 2 times

1–3.2.5 System Maintenance Concept. The general maintenance approach is to centrally monitor on–line system performance at the RDA, RPG, and PUP levels, to localize the failures through the use of software and hardware built–in test equipment (BITE) maintenance features, and to replace the failed line replaceable unit (LRU) from on–site spares, whenever available. The actual repair of a replaced item is performed either in a designated on–site repair area with non–operational system equipment or at a depot. Diagnostic software and maintenance features are designed to rapidly isolate malfunctions to the LRU level.

1–3.2.6 System Calibration. RDA equipment performance parameters and characteristics are maintained within specification through the performance of on–line and off–line calibration.

1–3.3 RDA GROUP CAPABILITIES.

1–3.3.1 RDA Functions. The RDA provides the capability to acquire, signal process, and transfer weather radar data to the RPG via the WBC function. If the RDA and RPG are collocated (within 400 ft. of each other), then the processors are connected with a hardwire copper cable. If the RDA and RPG are not collocated, then either MLOS, Private T1, or TELCO equipment is used. The RDA consists of a coherent Doppler radar capable of continuous, pre–programmed surveillance. The Doppler radar returns are processed to suppress ground clutter and to provide radar weather

base data consisting of reflectivity, mean radial velocity, and spectrum width. The RDA is designed for unattended operation. In the event that primary (commercial) power fails, the RDA equipment is automatically switched over to backup (diesel generator) power. During this switch–over time, the transition power source (TPS) provides an uninterruptible “ride–through” period to keep the critical equipment (RDA, RPG, and WBC groups) powered until the generator assumes the entire site load. The TPS system at an FAA site is a rotary system, while an NWS or DoD site uses a battery system.

Table 1–7. Summary of WSR–88D Functions

Functions	Characteristics
Radar Data Acquisition Group	
Transmit/Receive	Control antenna. Generate pulses. Receive echo returns. Separate reflectivity and phase (analog) data.
Signal Processing Reflectivity	Provide analog–to–digital conversion for reflectivity data. Generate digitized reflectivity estimates.
Velocity	Provide analog–to–digital conversion for phase data. Generate digitized mean radial velocity and spectrum width estimates.
Data Processing	Base data generation. Base data distribution.
Archive I/II	Format data for recording on appropriate medium. Support future connection of appropriate recording device.
Radar Product Generation Group	
Data Processing	Signature recognition. Storm Cell Tracking. Product generation. On–line product storage. Base data distribution. Product distribution. Control/status monitoring. Accept request/reply commands from MSCF.
Archive III	Format data for recording. Control recording device. Record selected products.
Master System Control Function Group	
MSCF Processing	Enter adaptation data. Control/status monitoring.
Principal User Processor Group	
Data Processing	Accept request/replay command from PUP operational position. On–line storage of selected products. Control/status monitoring.

Table 1–7. Summary of WSR–88D Functions (continued)

Functions	Characteristics
Principal User Processor Group	
Operational Position	Display locally stored base products. Display locally stored derived products. Display locally stored alphanumeric products. Request products from associated RPG. Request products from non–associated RPG. Annotate products. Enter adaptation data. Control/status monitoring.
Archive IV	Format data for recording. Control recording device. Record selected products. Data playback.

Table 1–8. Overall WSR–88D Capabilities

Capability	Description
Data Acquisition	
Range	Reflectivity data: 460 km (248 nautical miles). Velocity data: 230 km (124 nautical miles).
Elevation	Normal: –1° to 20°. Maximum: –1° to 45°.
Altitude	70 k ft.
Data Processing	
Base Data	Reflectivity, mean radial velocity, and spectrum width.
Product Generation	Base and derived products.
Product Display	Formatted products with: Overlays. Time lapse display. Annotation. Centering, magnification, and resolution variation.
Display	
Graphics	Two color graphics monitors. Color graphics printer.
Alphanumeric	Alphanumeric terminals. Color printer.
Control	Graphics tablet. Alphanumeric terminals.
Communications	
Wideband	Two channels (maximum) for RDA and RPG processors, with duplex transmission rate of 0.75 megabytes/second.
Narrowband	Duplex transmission rate of 14,400 Baud: RPG processor: 24 lines (maximum) PUP processor: 10 lines (maximum) RPGOP processor: 1 line (56,000 baud) (NWS Only)
BDDS	Four ports (maximum) using LAN or WAN.
AWIPS LAN	NWS RPG Only: One 10/100 BaseT LAN Port.

Table 1–8. Overall WSR–88D Capabilities (continued)

Capability	Description
Data Storage	
Intermediate	RPG: 6 hours maximum of selected products PUP: 6 hours maximum of display products while using a product set request list of up to 20 entries. RPGOP: 6 hours maximum of display products while using a product set request list of up to 50 entries.
Archiving	
I (Optional)	Radar Receiver analog video.
II (Optional)	RDASC digital base data and metadata.
III (NWS Only)	RPG (≈ 450 hours) base and derived products.
IV	PUP (168 hours) display products.

Table 1–9. WSR–88D Control Capabilities

Item	Explanation	Functional Capabilities Available At			
		RDA	RPG	MSCF	PUP
Startup	The capability to initiate operation of a portion of the WSR–88D.	X	X	X	X
Warm Startup	The capability to restore to operation the RDA portion of the WSR–88D.	X	X[1]	X[1]	–
Restart	The capability to restore to operation a portion of the WSR–88D.	X[2]	X	X	X
Shutdown	The capability to stop in a controlled manner the operation of a portion of the WSR–88D.	X	X	X	X
Status Output	The capability to control the output, recording, and monitoring of status and error information relating to the operational condition of various portions of the WSR–88D.	–	X	X	X
Radar Mode Control	The capability to control certain predefined RDA parameters.	X	X[1]	X[1]	–
Configuration Control	The capability to control the WSR–88D hardware and software operational configuration (for example, the capability to include/exclude data entry or printer equipment at an RPG and to initiate/terminate the on–the–job training software.)	–	X	X	X

– – – – –

NOTES:

1 This capability can be exercised when the RDA is under “DISTANT” control.

2 An RDA restart can be commanded from the MSCF.

3 This capability is a functional part of the RPG and is accessible through the MCSF.

4 The RDA has the capability to control Archive II at the RDA Maintenance Terminal.

5 The RDA has the capability to initiate switch over between commercial and backup power when the RDA is under local control. RPG can be switched if collocated with RDA. RDA power transfers can be commanded from the MSCF when RPG has control.

Table 1–9. WSR–88D Control Capabilities (continued)

Item	Explanation	Functional Capabilities Available At			
		RDA	RPG	MSCF	PUP
Communication Control	The capability to establish (or re–establish) any WSR–88D communication interface and to control initiation/termination and selection of data flow for each interface.	–	X	X	X
Product Generation Control	The capability to initiate/ terminate generation of specific products, and to establish/modify thresholds used for automatic initiation of product generation.	–	X[3]	X	–
Archival Control	The capability to initiate/ terminate the archiving of selected WSR–88D data and products, including setting the frequency of archiving for each data/product type.	X[4]	X	X	X
Alarm Control	The capability to establish and modify thresholds which, when reached, will cause automatic initiation of a function (for example, generation of a specific product only when a threshold value is reached, generation of alarm messages and their output on user terminals when a specific threshold is reached).	X	X	X	X
Adaptation Control	The capability to select adaptation parameters.	X	X	X	X

– – – – –

NOTES:

1 This capability can be exercised when the RDA is under “DISTANT” control.

2 An RDA restart can be commanded from the MSCF.

3 This capability is a functional part of the RPG and is accessible through the MCSF.

4 The RDA has the capability to control Archive II at the RDA Maintenance Terminal.

5 The RDA has the capability to initiate switch over between commercial and backup power when the RDA is under local control. RPG can be switched if collocated with RDA. RDA power transfers can be commanded from the MSCF when RPG has control.

Table 1–9. WSR–88D Control Capabilities (continued)

Item	Explanation	Functional Capabilities Available At			
		RDA	RPG	MSCF	PUP
Product Storage Control	The capability to select and change the set of products to be stored in an on–line data base.	–	X	X	X
Backup Power Control	The capability to initiate a switch between commercial and backup power for both the RDA and RPG (if collocated with RDA).	X[5]	X[3]	X	–

– – – – –

NOTES:

1 This capability can be exercised when the RDA is under “DISTANT” control.
2 An RDA restart can be commanded from the MSCF.
3 This capability is a functional part of the RPG and is accessible through the MCSF.
4 The RDA has the capability to control Archive II at the RDA Maintenance Terminal.
5 The RDA has the capability to initiate switch over between commercial and backup power when the RDA is under local control. RPG can be switched if collocated with RDA. RDA power transfers can be commanded from the MSCF when RPG has control.

Table 1–10. WSR–88D Response Times

Function	Response Time
RDA	
Cold start	15 min.
Warm start	10 sec.
Restart	(Note [1])
Alarm	5 sec.
RPG	
Cold start	2 min. 15 sec.
Restart	1 min.
Power fail recovery	Not Applicable (N/A)
Local MSCF (NWS)	
Cold start	2 min. 15 sec.
Status	1 sec.
Alarm	1 sec.
Hardcopies	15 sec. (text)
	45 sec. (graphics)
Distance MSCF (DoD, FAA)	
Cold start	2 min. 15 sec.
Status	5 sec.
Alarm	5 sec.
Hardcopies	15 sec. (text)
	45 sec. (graphics)
PUP	
Product selection (locally stored)	3 sec.
Production selection (one–time basis)	(Note [2])
Product deselection	100 msec.
Product turn–on/turn–off	100 msec.
Background map selection/deselection	1 sec.
Background map turn–on	500 msec.

– – – – –

NOTES:

1 The RDA restart time is a function of outage time and the state of the RDA, but shall in no case exceed the RDA cold startup time.

2 Response times are defined for each product.

3 For products preselected for time lapse display, the response time shall not be greater than 3 seconds. For all other products, the response time shall not be greater than 3 seconds + 1.25 seconds per image in the display sequence.

4 When successive images are displayed with a response time less than 1 second, the displayed product resolution may be reduced to not less than 256 X 256 pixels. However, the product shall fill a 512 X 512 pixel display area.

Table 1–10. WSR–88D Response Times (continued)

Function	Response Time
PUP	
Background map turn–off	100 msec.
Off–center/preset center	3 sec.
Resolution change	(Note 2)
Display annotation	200 msec.
Display of cursor coordinates	1 sec.
Cursor home	1 sec.
Test pattern selection/deselection	1 sec.
Status message output	10 sec.
Alarm/alert output	5 sec.
Power fail recovery	30 sec.
Magnification	3 sec.
Time lapse display	3 sec.
– First image	(Note 3)
– Successive images (Note 4)	1/3–10 sec.
– Image replacement	100 msec.
Master cursor function	100 msec.
Hard copy generation	2 min.
Cold startup	2 min.
Warm startup	–
Restart	30 sec.
TPMS	
Ride through	9 minute minimum (Full load, new batteries)

– – – – –

NOTES:

1 The RDA restart time is a function of outage time and the state of the RDA, but shall in no case exceed the RDA cold startup time.

2 Response times are defined for each product.

3 For products preselected for time lapse display, the response time shall not be greater than 3 seconds. For all other products, the response time shall not be greater than 3 seconds + 1.25 seconds per image in the display sequence.

4 When successive images are displayed with a response time less than 1 second, the displayed product resolution may be reduced to not less than 256 X 256 pixels. However, the product shall fill a 512 X 512 pixel display area.

Table 1–11. WSR–88D Weather Products

Product Type	Product Name
Base products	Reflectivity
	Mean radial velocity
	Spectrum width
Derived Products	Combined shear
	Combined shear contour
	Composite reflectivity
	Composite reflectivity contour
	Echo tops
	Echo tops contour
	Severe weather analysis display
	Severe weather probability
	Velocity azimuth display winds
	Combined moment
	Cross section
	Weak echo region
	Storm relative mean radial velocity
	Vertically integrated liquid
	Storm track information
	Hail index
	Mesocyclone
	Tornado vortex signature
	Storm structure
	Layer composite reflectivity
	Surface rainfall accumulation
	Storm total rainfall accumulation
	Hourly digital precipitation array
	Supplemental precipitation array
	Hybrid scan reflectivity
	Digital hybrid scan reflectivity
	Layer composite reflectivity – AP removed
	Composite reflectivity – AP edited
	ITWS digital velocity product

Table 1–12. WSR–88D Configurations

Feature	As–Delivered (Min./Max.)	Comm. Limit (UnExp./Exp.)
RDA		1/1
– External Base Data Interface	0/1	
– Archive I Interface Connection	1/1	
– Archive II Interface Connection	1/1	
– Dual Channel	0/1	
RPG		1/1
– Dedicated Ports to Associated Users	16/16	
– Dedicated Port for Distant MSCF	0/1	
– Dial–in Ports from Non–associated Users	8/8	
– Archival Capability	0/2	
– Remote Base Data Interface	0/1	
– Local Base Data Interface	0/1	
– AWIPS LAN Interface (NWS Only)	1/1	
MSCF	1/1	
– Dedicated Port for Distant MSCF	0/1	
– Color Printer	0/1	
PUP	0/8	
– Dedicated Ports to Associated RPG	0/*	2/2
– Dial–out Ports to RPG	1/*	8/10
– Dedicated Ports to Principal User External Systems	0/*	2/2
– Dial–in Ports from Other Users	0/*	1/1
– Archival Capability	1/1	
PUP Operational Position	1/1	
– Graphics Displays per Position	2/2	
– Alphanumeric Displays per Position	1/1	
– Hardcopy Devices per Position	0/1	
– Video Interface Connections per Position	1/1	

– – – – –
NOTES:
* For maximum communication configuration, refer to Comm. Limit column.

Table 1–13. Non–Operating and Operating Environmental Conditions

Feature	Characteristic
Sheltered Equipment	
Non–Operating	
Temperature	–35 °C to +60 °C
Humidity	15 to 100%
Operating	
Temperature	+10 °C to +35 °C
Humidity	20 to 80%
Altitude	Radar Site : 3300 meters
	User Site : 2100 meters
Outdoor Equipment (Radome, towers, shelters, etc.)	
Non–Operating	
Temperature	–62 °C to +60 °C
Humidity	15 to 100%
Rain	1 hour average rain rate of 130 mm per hour (with an instantaneous rate of 400 mm per hour) with a wind speed of 33 meter per second (m/s)
	12 hour average rain rate of 30 mm per hour with a maximum wind speed of 26 m/s
	24 hour average rain rate of 18 mm per hour with a maximum wind speed of 21 m/s
Operating	
Temperature	–40 °C to +49 °C
Humidity	15 to 100%
Altitude	Radar Site : 3300 meters
	User Site : 2100 meters
Rain	Instantaneous rain rate equivalent to 300 mm per hour with a maximum wind speed of 18 m/s
Fungus	Compliant to MIL–STD–454 reqt 4
Salt Fog	Salt laden atmosphere
Sand and Dust	Particle concentration of 0.177 grams per cubic meter with particle size up to 150 micrometers in diameter with speeds up to 18 m/s

Table 1–13. Non–Operating and Operating Environmental Conditions (continued)

Feature	Characteristic
Outdoor Equipment (Radome, towers, shelters, etc.)	
Operating – Cont.	
Wind	RDA pointing accuracy in azimuth and elevation of ±1/3° RMS in steady state wind of 25 m/sec and ±1° in steady state wind of 50 m/s
Snow and Ice Load	Radome and tower shall withstand 235 kilograms per square meter of snow and ice load without physical damage
Sheltered Equipment	
Temperature	+10 °C min. +35 °C maximum
Humidity	20 – 80%
Exposed Equipment[1]	
Temperature	–40 °C min. +49 °C maximum
Humidity	15 – 100%
Rain	300 mm per hour at wind speeds up to 18 m/s
Wind, Snow, and Ice Load	60 ms^{-1} maximum 235 kilograms per square meter
Dust	Particle concentration of 0.177 grams per cubic foot with particle sizes up to 150 micrometers in diameter with wind speeds up to 18 m/s

–––––

NOTE:1 Exposed equipment is not located in a controlled environment, including radome, towers, shelters, etc.

1–3.3.2 RDA Performance Capabilities Summary. The capabilities of the RDA equipment group are summarized in Table 1–14.

1–3.3.3 RDA Control Features. The RDA contains the hardware and software necessary to allow operational control and monitoring of all RDA functions, either locally or remotely (via MSCF). The control features provided are:

- RDA shutdown
- RDA warm start
- RDA restart
- Stop/Start data Transmission
- Set RDA mode
- Readout status and performance monitoring parameters

1–3.3.4 RDA Monitoring and Error Detection. The RDA includes a capability for equipment monitoring and reporting the status of radar functions to the RDA maintenance position and the RPG Master System Control Function (MSCF). This capability provides the RPG and PUP with RDA status, including a positive indication that the RDA is operating within specification parameters. The RDA equipment includes built–in test equipment to provide a combination of on–line and off–line status monitoring and self test to support system operation and fault isolation. The RDA includes the capability to monitor the performance of selected functions on a non–interfering basis with the processing of on–line data and to perform tests to ascertain that no degradation in operation has occurred.

1–3.3.5 RDA Calibration. The RDA, during each volumetric scan sequence, automatically performs calibration measurements and automatically corrects the base data. The calibration data and parameters accompany products for applications by the users at all levels of data processing. The calibration measurements are as follows:

- Measurement of the average transmitted power level both at the antenna and at the transmitter
- Calibration of the RDA reflectivity channel from the channel's first active device through the signal processor
- Check of mean radial velocity and spectrum width processing performance

1–3.3.6 RDA Archiving. The RDA provides interface connections to allow archive data to be obtained. The Archive I data are the output of the receiver (analog time–domain data). The Archive II data are the output of the signal processor (digital base data and status information).

1–3.3.6.1 Metadata. Data transferred to Level II for archiving includes the following information called “metadata”:

- Base data with headers
- RDA summary status
- RDA performance/maintenance data
- RDA VOLSCAN data
- RDA clutter filter bypass data
- RDA notch width map data
- RDA adaptable parameter data

For details, see the Archive II/User Interface Control Document (ICD 2620010).

1–3.3.7 RDA Redundancy. A redundant RDA configuration is used at FAA and NWS sites to provide increased system availability. Both types of redundant systems have a partial redundant RDA Group. There is only one tower, antenna, pedestal, generator and dual transmitter/receiver/data processing channel. Waveguide switching connects the antenna to the appropriate transmitter/receiver/data processor. The off–line channel is normally maintained in a powered standby condition, but may be placed in a fully operating condition. If the off–line channel is placed in an operating condition, the transmitter output is diverted into a high–power dummy load and simulated signals are injected into the receiver front end. In an FAA redundant system, there are two RDAs and two RPGs; each RDA group communicates to its associated RPG. FAA redundant systems also have a remote monitoring and control capability. The NWS redundant system has two RDAs, one RPG, and a wideband communication switch that is capable of sending information to the RPG from either RDA.

Table 1–14. RDA Capabilities

Feature	Characteristic
Radar Range	
Mean radial velocity and spectrum width – 1 to 230 km	Reflectivity – 1 to 460 km
Transmitter	
Transmit frequency range	2.7 to 3.0 Gigahertz (GHz)
Peak power output	0.75 Megawatts
Average power output	300 – 1300 Watts
Pulsewidths	1.57 µsec short, 4.5 µsec wide
Range sample interval	250 meters
Pulse repetition frequency (PRF)	Variable, long: 318–452, Short: 318–1304
Waveform types	Contiguous, batch, stagger[1]
Antenna/Pedestal	
Antenna type	S–Band center–feed parabolic dish
Antenna size	28.0 ft. O.D. (outside diameter)
Beamwidth	0.95° pencil beam
Polarization	Linear
Pedestal type	Elevation over azimuth
Azimuth coverage	360° continuous
Azimuth rate (maximum)	±36 °/sec (6 RPM)
Elevation coverage	Operational: –1° to +45° Test: –1° to +60° Normal operation: –1° to +20° at one preselected incremental step per rotation. (The selected elevation cuts are volume coverage pattern dependent)
Receiver/Processor	
Receiver operating band	2.7 to 3.0 GHz
COHO reference xtal oscillator	57.55 Megahertz (MHz)
STALO output	f_T – 57.55 MHz
Synchronizer clock	9.6 MHz (derived from COHO)

– – – – –
NOTE:
1 Stagger waveform is not currently used.

Table 1–14. RDA Capabilities (continued)

Feature	Characteristic
Receiver/Processor	
RF test source	Pulse/cw variable in 1 dB increments over receiver dynamic range
	Pulse to pulse programmable phase modulation
Receiver channel types (2)	Linear Output I/Q
	Log Output
Dynamic range	95 dB
Receiver noise figure	2.9 dB
Signal processor types	Hardwired/Programmable
Clutter map/filter	Yes/Hardwired
Clutter cancellation/suppression	> 50 dB
Status and control processor	
Processor	One general purpose digital computer with 32–bit architecture, rated at 6.0 million instructions per second (MIPS), with on board floating point memory
Processor memory	8 MB Semiconductor Memory
Mass storage	150 MB magnetic tape cartridge
	600 MB Fixed Disk
Ports	
Wideband	One (expandable to two) at 1.544 Mbits/sec (DSX–1 standard)
RS–232 peripheral	8 (three are used for Antenna Control Unit, DAU, and Maintenance Terminal; in a redundant system an interprocessor channel is also used)
Operating system	OS/32

– – – – –
NOTE:
1 Stagger waveform is not currently used.

1–3.4 WBC GROUP CAPABILITIES.

The RDA and RPG data processors are interconnected via a wideband communications link which allows the RDA to transmit real–time base data to the RPG. The WBC equipment can consist of one of four options described in paragraphs 1–3.4.1 through 1–3.4.4. The RDA data processor has the capacity for the addition of a second wideband port for real–time distribution of base data to a user site. In the RPG the optional BDDS data processor transmits wideband base data to additional other users. The capabilities of the WBC equipment group are summarized in Table 1–15.

1–3.4.1 Hardwire. A copper cable is used to interconnect the data processors when the RDA and RPG are collocated.

1–3.4.2 MLOS. MLOS transceivers and antennas are located at both the RDA and RPG sites. The transceivers are connected to their associated data processors. A nondiversity technique is used to transmit the data between sites. The MLOS equipment employs a fault alarm system to monitor MLOS equipment alarms.

1–3.4.3 Private T1. The Private T1 configuration uses a pair of Channel Service Units (CSUs), one at the RDA and one at the RPG, hardwired to each other. The CSUs act as a signal repeater for the digital signal from either the RDA's VME wideband communications card or the RDA/RPG gateway. The CSUs have the capability of detecting and indicating alarms.

1–3.4.4 TELCO T1. The TELCO T1 configuration uses a CSU at the RDA and at the RPG. The RDA CSU and the RPG CSU connect to the TELCO's demarcation panels which are located at the RDA and RPG. The CSUs act as an interface between TELCO T1 service and either the RDA or RPG processor's digital communication equipment. The CSUs have the capability of detecting and indicating alarms.

Table 1–15. WBC Capabilities

Parameter/Feature	Capability/Characteristic
WBC group components	
RDA interface components	VMEbus to Concurrent I/O Board – Concurrent (VCI–C) and VME to Concurrent I/O Board – VME (VCI–V) provide direct memory access (DMA) for the wideband board and are mounted in the RDA Concurrent and VME chassis, respectively.
RPG interface components	RDA/RPG gateway accesses the RPG computer memory through the RPG LAN switch.
Terminal links	MLOS transceiver provides line–of–sight (LOS) transmission and receiving capabilities.
	Wire is used for the DSX–1 interface with 100 ohm DSX–1 compatibility.
	The RDA CSU provides extended hardwired link, surge protection capabilities, and the appropriate interface to connect to TELCO T1 service.
	The RPG RDA/RPG gateway provides extended length to the hardwire link, surge protection capabilities, and the appropriate interface to connect to TELCO T1 service. It also converts the wideband data from the T1 DSX–1 analog format to high speed serial (HSS) RS–530 digital data format and then to TCP/IP protocol.
	Category 5 (CAT5) cable is used for the RS–530 HSS interface.
Wideband interface format	Provide a standard DSX–1 at 1.544 Mbps ±75 bps using B8ZS line coding and either extended super frame (ESF).
WBC group operations	
Restart and warm startup	Automatic restart and equipment reinitialization to reestablish interface.
Data communication and error detection	Transmission rate of 1.544 Mbps ±75 bps, full duplex with DMA bus.
	Errors in frame format and signaling are detected by the wideband boards prior to, and on receipt of, T1 transmissions. End–to–end network testing of line coding is available with CSU–to–CSU gateway configured links.

Table 1–15. WBC Capabilities (continued)

Parameter/Feature	Capability/Characteristic
WBC group operations	
Terminal links	Twisted wire pairs are used from 0–400 ft. with a cable loss not to exceed 6 dB per 1000 ft. at 772 kHz. (Maximum cable length is 500 ft.) MLOS transceiver from 1.7 to 2.3 GHz with a power output of 30 dBm. Its range is approximately 25 miles per pair. The Bit Error Rate (BER) is less than 10^{-6}.
	Twisted wire pairs up to 3,000 ft. in length are used in conjunction with a CSU at the RDA and a CSU at the RPG end. CSU and RDA/RPG gateway inputs and outputs are DSX–1 compatible. Twisted wire pairs have the same characteristics as the hardwired configuration. CSUs provide the data and signal interface for the RDA and RPG processors to communicate via TELCO T1 channels. This option is used when such commercial service is available and less expensive than the MLOS configurations.

1–3.5 RPG GROUP CAPABILITIES.

1–3.5.1 RPG Functions. The RPG processes base data received from the RDA (via the WBC group) to generate a set of products which contains information concerning the following meteorological phenomena:

- Precipitation
- Wind and wind shear
- Tornadoes
- Fronts and fine lines
- Tropical cyclones
- Mesocyclones
- Thunderstorms
- Icing conditions
- Hail
- Freezing/melting level

The products are then distributed to the users. In a fully automated mode the RPG is capable of being operated unmanned. However, operator control can be exercised both directly and through setting adaptation data.

1–3.5.2 RPG Performance Capabilities. The capabilities of the RPG equipment group are summarized in Table 1–16.

1–3.5.3 RPG Functional Capabilities. The RPG provides the following functional capabilities:

- Product generation
- Product storage
- Product distribution
- Control and communications (RDA/RPG)
- Status monitoring and error detection
- Archiving
- Hydrometeorological processing
- Alert processing
- Base data distribution

1–3.5.3.1 RPG Product Generation. The RPG uses algorithms to process base data to detect and measure meteorological phenomena and produce weather products. The RPG produces the following types of products:

- Base products
- Derived products
- Alphanumeric products
- Derived data arrays

1–3.5.3.2 RPG Product Storage. The RPG provides the capability for on–line storage of all products. The RPG provides the capability for defining and changing the product mix and retention time (up to a maximum of six hours) for products to be retained in the on–line RPG storage. This capability is controlled by input from the MSCF by means of adaptation data. Products stored within the RPG on–line storage are incapable of being altered by any principal external user system.

1–3.5.3.3 RPG Product Distribution. The RPG makes products available for distribution to associated and non–associated users, including the following:

- Dedicated associated users (PUP, DoD OPUP, FAA WARP, FAA ITWS, FAA OSD, NWS AWIPS)
- Non–associated users (PUP, DoD OPUP, NWS AWIPS)

1–3.5.3.4 RPG Control Capabilities. The RPG control capabilities provide for operation of the RDA and RPG. These RPG control capabilities are as follows:

- RPG Restart

- RPG shutdown
- RDA standby, restart, and operate
- RDA controlled shutdown
- RDA power source control
- RDA control (local or remote)
- Archiving control for Level II and Level III
- RPG product generation list control
- RPG loadshed product control
- RPG adaptation parameters control
- Narrowband communications line management control
- Redundant channel control
- Other user distribution

1–3.5.3.4.1 Control Functions. The MSCF is provided to support control functions. Commands entered from this equipment are executed within the RPG via the application software. Control function menus are found by selecting the RDA control or RPG control buttons. Access to the MSCF is limited with logins and passwords required.

1–3.5.3.5 RPG Status Monitoring and Error Detection. The capability is provided at the MSCF to monitor the status of the RDA, the RPG, and communications interfaces. This status monitoring capability includes operational modes, conditions, and parameters, as well as error conditions. Alarm messages received by the MSCF are converted into status messages for the purposes of further dissemination. The majority of all status monitoring and error detection is found in various areas of the HCI main menu. A descriptive English language message is provided at the MSCF under the following conditions: when requested at the MSCF; periodically, as specified at the MSCF, and when there is a change in the status of the RDA, the RPG, or any of the WSR–88D communications interfaces. In addition, a descriptive English language message is provided to the associated users under the following conditions: when requested; periodically, as specified by the associated users, and when there is a change in the status of the RDA or RPG.

1–3.5.3.5.1 Product Priority (Load Shed Products) Adaptation Parameter. A product priority (load shed products) adaptation parameter defines the order for deleting products when an overload situation occurs on an interface within the WSR–88D system, or on an associated principal user link. The recovery from an overload condition is performed automatically as soon as conditions allow. Products are recovered in the reverse of the shedding order.

1–3.5.3.6 RPG Archiving. The capability is provided within the RPG to generate the archive record of selected products on a permanent and easily transportable medium. This is defined as Archive III. The RPG has the capability to ingest, from the archive medium, products previously

archived by any RPG for processing or display. The archive medium is capable of storing ≈450 hours worth of the full load archiving product mix. Selection of product types to be archived and the frequency of archiving is made by manual action from the MSCF via the HCI. RPG archiving abilities can be accessed through the archive products menu button from the HCI main menu.

1–3.5.3.7 RPG Hydrometeorological Processing. The RPG generates real–time quantitative rainfall estimates and makes them available for flash flood warnings and to prepare rainfall–related products for transmission to all users. Selectable hydrometeorological algorithm parameters are available via the HCI main menu by selecting RPG products menu button.

1–3.5.3.8 RPG Alert Processing. The RPG generates alert outputs based upon identified meteorological phenomena occurring or projected to occur in alert areas defined by each associated user's operational position. The RPG operator can access control of these alerts/thresholds by selecting the RPG products menu button.

1–3.5.3.9 RPG Redundancy. A redundant RPG configuration is used at FAA sites to provide increased system availability. A redundant RPG consists of dual data processing, two wideband communication ports (one for each RDA), narrowband communications channels, a single distant MSCF, and equipment that switches the MSCF and user links to each of the narrowband communications channels. Switching is accomplished by the software and controlled by operator commands entered at the MSCF terminal. These menu options are available only to FAA redundant systems from the HCI main menu.

Table 1–16. RPG Capabilities

Feature	Characteristic
Processor	
Processor	Uniprocessor system with an UltraSPARC 440 MHz (or faster) Processor
Shared memory	Minimum of 256 MB of RAM
Mass storage for up to 1.5 hours of full–load product mix data	Primary hard drive of at least 9.1 GB formatted capacity. Standard 3.5 inch floppy drive and CD–ROM drive included
Operating system	UNIX Operating System
Archive storage device	Archive III Storage for up to ≈450 hours of full–load product mix data. Disk has the capacity to store 2 GB (2002 MB) of data. This component is used for Archive III purposes which are applicable to NWS systems and for backup purposes for all RPGs.
Wideband communications port(s)	One wideband port to receive base data from the RDA and exchange status and information. One wideband port to transmit base data to a user external to the WSR–88D. Both parts are standard DSX–1 format at 1.544 Mbps.
BDDS	Four ports (maximum) data transfer can be via LAN or WAN
Narrowband communication equipment	Narrowband modems are set to 14.4 Kbps; several specialized sites use 33.6 Kbps.

1–3.6 MSCF GROUP CAPABILITIES.

1–3.6.1 MSCF Functions. The MSCF is the man/machine interface that allows the operator and maintenance technician to interact with the RPG processor operating system, application graphics, and maintenance programs. The applications functionality specifically designed to provide the graphical control interface to the RPG processor is called the human computer interface (HCI). The MSCF provides control over the RPG processing functions by permitting the selection of products to be routinely generated and a product subset to be archived. It also provides the interface to access the operating system, initialize the RPG processor, and perform first level analysis of system malfunctions. Operational information about the application functionality/GUI interface for the MSCF can be found in NWS EHB 6–526 for operators or in NWS EHB 6–525 for maintenance technicians.

The MSCF is comprised of a terminal suite containing an MSCF processor (UD71A1), 21 inch monitor (UD71A2), keyboard (UD71A3), and mouse (UD71A4). Also part of the MSCF group is a backup storage device (UD71A6), surge suppressor (UD71E1), and a color printer (UD79A1).

1–3.6.1.1 Local MSCF. NWS systems have local MSCFs. An MSCF is normally collocated with the associated user that supports editing of the radar coded message (RCM) function. Thus, with NWS systems, the MSCF is located locally (within the same building) with the RPG Processor. The local MSCF has a direct TCP/IP path to the router in the RPGPCA. The router provides a serial (out of bandwidth) connection to the power administrator and a direct TCP/IP (in bandwidth) connection to the LAN switch.

1–3.6.1.2 Distant MSCF. DoD and FAA systems have a distant MSCF. When the MSCF is at a distance from the RPG, it is referred to as the distant MSCF. The distant MSCF may be many miles from the RPG Processor. A distant MSCF is connected to the RPG via a narrowband communications link using dedicated–port modems or frame relay service.

1–3.6.2 MSCF Performance Capabilities. The capabilities of the MSCF equipment group are summarized in Table 1–17.

Table 1–17. MSCF Capabilities

Feature	Characteristic	
Processor		
Processor	Uniprocessor system with an UltraSPARC 400 MHz (or faster) Processor.	
Shared memory	Minimum of 256 MB of RAM	
Mass storage for up to 1.5 hours of full–load product mix data	Primary hard drive of at least 9.1 GB formatted capacity. Standard 3.5 inch floppy drive and CD–ROM drive included.	
Operating system	UNIX operating system	
Backup storage device	Disk has the capacity to store 2 GB of data. Device is used for software and data backup purposes for the MSCF and RPG.	
Distant/local MSCF	MSCF terminal suite (processor, monitor, keyboard, and mouse) with a surge suppressor, color printer, and a backup storage device for backup purposes. A dedicated–port modem is included with distant MSCFs (DoD and FAA sites), or a frame relay hub router with CSU/DSUs.	
MSCF color printer	Type:	Color laser printer
	Resolution:	Black resolution – 1200 dpi
		Color resolution – 600 dpi
	Memory:	32 MB RAM
	Print Speed:	16 pages per minutes (ppm) black
		5 ppm color
	Toner Capacity:	Black – 6000 pages
		Cyan/Magenta/Yellow – 5000 pages

1–3.7 PUP GROUP CAPABILITIES.

1–3.7.1 PUP Functions. The PUP provides for the request, display, storage, annotation, and distribution of weather products received from the RPG. The PUP workstation is the system's primary meteorological operator work area.

1–3.7.2 PUP Performance Capabilities. The capabilities of the PUP equipment group are summarized in Table 1–18. Table 1–19 provides a summary of the PUP graphic display control capabilities.

1−3.7.3 PUP Functional Capabilities. The PUP provides the following functional capabilities:

- Product request
- Product display
- Local product storage
- Product annotation and distribution
- PUP control
- Status monitoring
- Archiving

1−3.7.3.1 PUP Product Request. The PUP is capable of requesting any set of products for routine receipt from an associated RPG. The PUP is capable of specifying the frequency at which a product is to be sent (up to the frequency at which the product is generated) and its priority. The PUP is also capable of requesting a change at any time to the set of products routinely sent from the associated RPG, or to the products frequency or transmission priority. The requests for these products and selection of their frequency and priority are based on adaptation data and on−line PUP operator inputs using the display and data entry equipment. The PUP readily displays the menu of products available from the associated RPG and the set of products with their frequency and priority routinely provided by the associated RPG. The PUP is also capable of requesting selected products on a one−time basis from any associated or non−associated RPG.

1−3.7.3.2 PUP Product Display. The PUP is capable of displaying weather products by using the data routinely sent from the associated RPG in conjunction with locally stored data (such as background maps and other overlays) and data received from any RPG as the result of a one−time request. Any annotations made to a product at an RPG are normally preserved when the product is displayed at an associated PUP; however, it is possible to display the product without the annotations in order to clearly depict the displayed product. Background maps are not included when the product is sent from an associated RPG. The background maps are stored locally at the PUP and displayed with the appropriate base or derived product. Background maps may be requested from a non−associated RPG. Products are displayed at the PUP in response to an operator request for a specific product or based on default criteria for the presentation of products in normal or hazardous weather situations. The product presentation uses the information in the local PUP data base, if available. If it is not available, the specific product is automatically requested from the associated RPG. The product display function includes the following capabilities:

- Product display selection
- Overlay capability
- Recentering
- Magnification and resolution change
- Time lapse display

- Display queued product
- Alert notification

1–3.7.3.3 PUP Local Product Storage. The PUP includes the capability to maintain a local data base containing the products and other data that are used regularly within the PUP. While using a product set request list of up to 20 entries, all products received from the associated RPG are retained locally for at least six hours. The local data base has the capability to include the following:

- Background map data
- Base products
- Derived products
- Alphanumeric products (including alert messages)
- Data formatted for time lapse display
- System status information

1–3.7.3.4 PUP Product Annotation and Distribution. Where required by a principal user, a PUP includes the capability for local annotation of selected weather products, their local storage, and their distribution (or control of their distribution) to a principal user external system. The annotation capability includes the ability to add, move, and delete alphanumeric data, special symbol data, and line segments.

1–3.7.3.5 PUP Control. PUP control provides the capability necessary for the PUP to accomplish its operational functions. Control functions that are provided in the PUP include the following:

- PUP cold startup
- PUP restart
- PUP shutdown
- Start/stop communications
- Change adaptation data
- PUP communication line configuration
- Other user distribution

1–3.7.3.6 PUP Status Monitoring. The PUP provides the capability for the PUP operator to monitor the status of all major components of the PUP, as well as the status of the associated RPG and RDA, the RPG communications link, and any external PUP interfaces. This status monitoring capability includes operational modes, conditions, and parameters, as well as error conditions. When the status of any of these items changes, a descriptive English language message is displayed and also written to a status file. In addition, the capability is provided to detect and record all hardware and software errors. When an error occurs, a descriptive English language message is

displayed and written to a permanent error log. The capability is also provided to maintain a permanent record of the time and content of alert messages received by the PUP. These status monitoring and error detection functions shall run concurrently with normal system operation. Additional capability is provided to allow the PUP operator to determine the following: the current status of the PUP equipment, the PUP communications interfaces, the associated RPG and RDA, and the status of the WSR–88D system over the past six–hour period. The capability is also provided to allow the PUP operator to request the display of a test pattern on any graphics display.

1–3.7.3.6.1 Product Overload Shedding/Recovery Priority Adaptation Parameter. A product overload shedding/recovery priority adaptation parameter defines the order for deleting products when an overload situation occurs on an interface within the WSR–88D system, or an interface between the WSR–88D system and an external user's system. The recovery from an overload condition is performed automatically as soon as conditions allow. Products are recovered in the reverse of the shedding order.

1–3.7.3.7 PUP Archiving. The PUP has the capability to maintain an archive record of selected products which it receives on a permanent and easily transportable medium. This is defined as Archive IV. The PUP operator has the capability of choosing which products are to be archived and how often they will be recorded. The capability is also provided to archive the entire local product database based on a PUP operator action.

1–3.7.4 Federal Aviation Administration Application. At selected FAA sites, the PUP display and data entry equipment are delivered without the PUP worktable and installed instead on government provided tables. Video fiber optics may be used to remotely locate one of the two graphics monitors up to 300 cable ft. away from the graphics processor. No PUP control features are provided at this remote position.

Table 1–18. PUP Capabilities

Feature	Characteristic
Display processor (M3200)	One general–purpose, digital computer with 32–bit architecture, rated at 6.0 MIPS
Processor memory	8 MB semiconductor memory expandable to 16 MB
Mass storage	140 MB/600 MB formatted fixed disks expandable to 3 disks total
	One 60 MB/150 MB streaming cartridge tape program load device
Archive IV storage	654 MB 5.25–inch optical disk for up to 168 hours of product storage
Operating system OS/32	Multitasking, multi–environment operating system

– – – – –
* PUP Workstation Extension only.

Table 1–18. PUP Capabilities (continued)

Feature	Characteristic
Graphics processor	Fixed point, 32–bit architecture general purpose digital computer 12–bit main lookup table Separate overlay lookup table Refresh memory–to–video multiplexor Windowing Terminal emulation Coordinate transformation
Alphanumeric terminals (application and system)	Tilt and swivel display with 14–inch green phosphor screen Detachable lightweight keyboard 2 pages of 24 X 80–line memory display Function keys Split screen display 128 ASCII character with 32 character graphic set
Communications equipment	10 narrowband lines maximum each one of which can be used for: • a four–wire dedicated modem at 14,400 bps • a two–wire dial–up modem at 14,400 bps • a modem eliminator for communication between PUP and RPG which are collocated The maximum configuration in the present contract has: • 3 dedicated modems • 4 dial–up modems for a total of 7 narrowband lines
Graphics tablet	Software–controlled electronic tablet with active push–control device 1000 lines per inch (LPI) maximum resolution
Color graphics monitor	Dual CRT high–resolution color graphics video monitors 1,280 X 1,024 pixels resolution, each CRT remote monitor drive video interface
Audible alarm	Volume adjustable audio tone

– – – – –
* PUP Workstation Extension only.

Table 1–18. PUP Capabilities (continued)

Feature	Characteristic
Graphics printer	A thermal wax print engine and a high speed digital color data communication interface
	Print image resolution of 300 dots per inch
	Matches printed colors to color graphics monitor image
	Completes image data offload from source devices in less than three seconds
	Images processing time 0–63 seconds
Limited distance modems*	Transmit data in an asynchronous mode at speeds up to 19.2 Kbps, full duplex. Transmit distance up to 5 miles. Transmit over 4 wire facility. Built in self–test diagnostic testing.
RGBS line driver/equalizer*	Amplifies signal to color monitor to extend workstation 100 ft. from graphics processor
Parallel line extender*	Amplifies signals to color printer to extend workstation 100 ft. from graphics processor (extends Centronix interface to 300 ft.)

– – – – –
* PUP Workstation Extension only.

Table 1–19. PUP Graphics Display Control Capabilities

Feature	Characteristic
Display image controls	Provide the graphics display operator with the capability to define the data content presented on the graphics display
Product turn–on/turn–off	Removes/restores product to allow viewing of annotations and overlays. Identifies which products are presented on the graphics display
Background map turn–on/ turn–off	Control of the background maps which are presented on the graphics display
Cursor position control	Controls the position of the cursor symbol on the graphics display
Cursor home	Positions the cursor symbol on the graphics display at the adapted home position
Magnification selection	Controls the magnification of the displayed data
Readout cursor coordinate value	Presentation of the current cursor position coordinate values output on the graphics display in an adapted readout location of the display
Display annotation control	Adds, moves, or deletes lines, alphanumeric data, and special symbols on the graphics display
Test pattern selection/ deselection	Select the test pattern for presentation on the graphics display, or remove the test pattern and have the previous data presented on the graphics display
Display parameter controls	Provide the graphics display operator with the capability to control the data sent to the graphics display refresh memory
Product selection/deselection	Select or remove WSR–88D products
Background map selection/ deselection	Select or remove background map data
Off–center/preset center	Select a different center point or the adapted center point as the new center for the graphics display presentation
Resolution selection	Select the resolution of the WSR–88D product data
Accept queued output message	Accept for output to the graphics display a product queued for output
Alarm acknowledge	Acknowledge receipt of data and messages which exceed predefined thresholds, and reset the alarm

Table 1–19. PUP Graphics Display Control Capabilities (continued)

Feature	Characteristic
Operational control commands	Provide the graphics display operator with the capability to control display–related functions
Product request	Request specific products which will be obtained and added to the PUP data base
Readout/set product selection list	Output or change the list of products received routinely and entered into the PUP data base
Time lapse display	Select a time lapse output of WSR–88D products on the graphics display, including control of the rate of display of successive images and the update time represented by the successive images
Master cursor function	Control the movement of all display cursors from a single cursor device. All displayed cursors will be geographically correct and not linked by screen position. In a 1/4 screen mode the display does not have to be designated as the master cursor function.
Store annotated display	Cause the display image to be input to the PUP data base
Initiate product distribution	Initiate the output of selected products to specific interfaces of the PUP
Initiate hard copy output	Initiate the output of selected products to the hard copy device
Initiate/terminate archiving	Initiate or terminate archiving of products to an optical disk

Section 1–4. Equipment Reference Data

1–4.1 INTRODUCTION.

This section identifies the equipment supplied, material required but not supplied, special tools and test equipment, computer programs, and technical manuals.

1–4.2 EQUIPMENT SUPPLIED AND VARIATIONS.

The equipment that comprises the RDA, WBC, RPG, MSCF, PUP, and RPIE equipment groups is listed in Table 1–20 through Table 1–25, respectively. These tables list the equipment in reference designation order, and provide nomenclature, common name, optional features, and remarks on site dependency or uniqueness to redundant system.

1–4.3 STANDARD TOOLS AND TEST EQUIPMENT.

The standard tools and test equipment used during WSR–88D maintenance are listed in Table 1–26 and Table 1–27, respectively. These tables provide tool/equipment nomenclature, manufacturer/part number, and the equipment group with which it is used.

1–4.4 SPECIAL TOOLS AND TEST EQUIPMENT LIST.

The special purpose tools and fixtures used during maintenance of the WSR–88D are listed in Table 1–28. This table identifies the items' nomenclatures and manufacturer/part numbers. There is no special test equipment used for organizational maintenance.

1–4.5 CONSUMABLES/EXPENDABLES.

The consummables/expendables used during operation or maintenance of the WSR–88D are listed in Table 1–29. This table lists the items' nomenclatures, descriptions, manufacturer/part numbers and the applicable equipment group.

1–4.6 COMPUTER PROGRAMS SUPPLIED.

The WSR–88D system software is divided into operational program software and support/diagnostic program software. The operational program executes in the processing equipment associated with the RDA, RPG, and PUP to accomplish all operational requirements. The support/diagnostic program software controls and monitors the operational equipment, detects/isolates faults to the LRU and permits operator/machine interfacing actions. The computer programs are listed in Table 1–30.

1–4.7 TECHNICAL MANUALS.

The operation and organizational–level maintenance of the WSR–88D is supported by a family of technical manuals. This technical manual family (Figure FO1–6) is structured to provide overview,

operation, and maintenance instruction. The overview is provided by a system manual. Operation data is provided by RPG and PUP operator's manuals and a Federal Meteorological Handbook (FMH–11), which provides operating doctrine. Routine maintenance procedures are provided by a PMI workcard set. Fault isolation and repair information is provided by individual equipment group manuals which are supported by equipment technical manuals and an illustrated parts breakdown manual. The functions of these manuals are briefly described in paragraphs 1–4.7.1 through 1–4.7.11. These manuals are delivered in functional sets, as defined in Table 1–31. NWS EHB document numbers appear on each page of the WSR–88D–unique technical manuals. These numbers are used for reference throughout the technical manual set. Agency publication numbers (shown in Table 1–31) are used for stocking and ordering purposes within these agencies. These numbers appear on the cover and title page of the listed manuals. The pages in the Commercial Off The Shelf (COTS) technical manuals are not identified with an NWS document number. Instead, a label is affixed to the front cover of these documents, listing all agency publication numbers.

1–4.7.1 System Manual. The System Manual is the top–level document in the WSR–88D technical manual set. This manual provides overall system–level data and information for operators, maintenance technicians, managers, and support personnel. The system manual provides system operational, physical, and functional descriptions, and includes complete reference documentation listings. Summary descriptions of system operating and maintenance requirements and procedures are provided, including top–level logistics guidance and management information.

1–4.7.2 RPG/PUP Operator's Manuals. The operator's manuals provide the meteorological operator with quick–reference information for use at the RPG and PUP. They are structured to emphasize operational features and workstation operating procedures. These manuals also contain the detailed step–by–step equipment operating procedures necessary to execute the procedures summarized in the quick–reference information. The PUP User's Guide is incorporated into the PUP's operator's manuals as appendixes. This guide provides complete operational descriptions and data for the associated applications program and operating station. These composite manuals provide the operator with all the information needed to operate the WSR–88D in accordance with the operational doctrine specified by the Federal Meteorological Handbook (FMH–11).

1–4.7.3 PM Workcard Set. This manual provides RDA, WBC, RPG, PUP, and RPIE preventive maintenance procedures in work–card format.

1–4.7.4 RDA Maintenance Manual Set. The RDA maintenance manual set provides complete coverage for all on–site maintenance task requirements of the RDA element. RDA operations includes startup and shutdown procedures, and special equipment setup and recovery procedures. The RDA maintenance manual contains system BITE and Radar Data Acquisition System Operational Test (RDASOT) procedures, and detailed fault isolation flow diagrams to support troubleshooting. The RDA maintenance manual is supplemented by two user guides which are provided as appendixes:

- RDA user guide (for RDASC applications software)
- RDASOT user guide (for RDASOT test programs)

The RDA maintenance manual provides equipment level coverage for the radar receiver and RDA data processor cabinet and is supplemented by commercial manuals for the following equipment:

- Transmitter
- Antenna positioning system
- Waveguide pressurization unit manual

1–4.7.5 WBC Maintenance Manual Set. The wideband communications maintenance manual provides information relating to the wideband communications interfaces of the RDA and RPG. It includes interface drawings and communications equipment installation, hookup, test and checkout procedures. COTS manuals are provided for each wideband equipment set installed at a particular site.

1–4.7.6 RPG Maintenance Manual Set. The RPG manual set is similar in purpose, structure, and function to the RDA manuals, except that it includes an operator's manual.

1–4.7.7 PUP Maintenance Manual Set. The PUP maintenance manual set utilizes the same approach as the other equipment manuals. The PUP technician may also refer to the PUP users guide. Commercial manuals for the color graphics printer supplement the PUP maintenance manual.

1–4.7.8 RPIE Maintenance Manual Set. The RPIE manual provides configuration, operation, and maintenance data for all radar site facility and utility functional elements of the WSR–88D. The basic manual contains data on standard tower and shelter systems, including the primary power generation and distribution systems, environmental systems, and fire control systems. The RPIE manual is supplemented with commercial manuals for the utilities components operational and maintenance data. In addition to the basic manual, each site is supplied with the local site Architects and Engineers (A&E) drawing packages, and an addendum detailing local site adaptation requirements or configuration differences.

1–4.7.9 Equipment Manuals. Selected commercial technical manuals are provided for off–the–shelf equipment. These manuals supplement the group maintenance manuals and are used under the control and direction of instructions provided in the primary group maintenance manual.

1–4.7.10 Illustrated Parts Breakdown (IPB) Manual. An overall IPB manual is provided for the WSR–88D system. This manual provides organization–level parts location and ordering information for each of the six functional equipment groups (RDA, WBC, RPG, MSCF, PUP, and RPIE). Coverage is limited to LRUs and replaceable discrete components.

1–4.7.11 Work Unit Code (WUC) Manual. The WUC manual provides a listing of government work unit codes and a top down breakdown parts list with equipment–identification codes. The work–unit and equipment–identification codes are used to report maintenance actions via a maintenance reporting system.

Table 1–20. RDA Equipment Supplied and Variations

Ref Des	Nomenclature	Common Name	Optional	Remarks
UD2	Antenna/Pedestal	Antenna/Pedestal Assembly		
UD3/UD103	Transmitter, Radar	Radar Transmitter	Additional Remote Monitoring and Control Capability (FAA ONLY)	
UD4/UD104	Radar Receiver	Radar Receiver	Base (A4 Preselect BP Filter w/o Interference Detection.)	
			Base + Interference Suppression:	Site Dependent
			Remote Power Supply Monitoring (FAA ONLY)	
UD5/UD105	RDA Data Processor	RDA Data Processor Cabinet	Remote Monitoring and Control Capability (FAA ONLY)	
A1	VME Chassis	VME Chassis	Base Wideband Board A2 Exp. Wideband Board A3	Expansion Port
			Remote VME Power Supply Monitoring (FAA ONLY)	
A2	Maintenance Panel Assembly	Maintenance Panel Assembly		
A3	DAU Panel Assembly	Data Acquisition Unit	Base	
A4	Terminal, Alphanumeric	Maintenance Terminal		

Table 1–20. RDA Equipment Supplied and Variations (continued)

Ref Des	Nomenclature	Common Name	Optional	Remarks
A5	SCSI Assembly	Data Storage Assembly	(150 MB Tape + 600 MB Mag Disk)	
A6	Digital Control Unit	Digital Control Unit	Site Dependent	Used in nonredundant RDA systems and RDA redundant systems in UD5 cabinet only
A7	Power Amplifier Unit	Power Amplifier	Site Dependent	Used in nonredundant RDA systems and RDA redundant systems in UD5 cabinet only
A9	Programmable Signal Processor	PSP		
A10	Hardwired Signal Processor	HSP		
A12	RDASC Processor	Micro 5	Base	
			Base + Archive II Bd A11	Site Dependent
A17	A/B Switch	A/B Switch	Site Dependent	Used in nonredundant RDA systems and FAA RDA redundant systems
A17	Dual A/B Switch	A/B Switch	Site Dependent	Used in NWS RDA redundant systems
A18	Channel Service Unit	CSU	Site Dependent	Used in nonredundant RDA systems and NWS RDA redundant systems UD5 cabinet only

Table 1–20. RDA Equipment Supplied and Variations (continued)

Ref Des	Nomenclature	Common Name	Optional	Remarks
A19	Automatic A/B Wideband Communication Switch	A/B Wideband Switch	Site Dependent	Used in NWS RDA redundant systems
A20	STATMUX	STATMUX	Site Dependent	Used in NWS RDA redundant system, UD105 cabinet only
A21	Dial Port Modem	Dial Port Modem	Site Dependent	Used in NWS RDA redundant system, UD105 cabinet only
A24	Relay Assembly	Relay Assembly		Used in NWS RDA redundant systems only
A25	Choke Assembly	Choke Assembly	Site Dependent	
UD6/UD106 UD6/UD106D	Pressurization Unit, Waveguide	Waveguide, Pressurization Unit	3 PSIG 3 PSIG/25 PSIG	Site Dependent (w/Spectrum Filter)

Table 1–21. WBC Equipment Supplied and Variations

Ref Des	Nomenclature	Common Name	Option	Remarks
UD19	MLOS Transceiver	MLOS Radio Cabinet (RDA)		
A1FL1 A1FL2	Bandpass Filter Assembly	Bandpass Filter Assembly		Nondiversity
A38PS1 A38PS2	Panel, Power Supply	Power Supply		Nondiversity
UD39	MLOS Transceiver	MLOS Radio Cabinet (RPG)		
A1FL1 A1FL2	Bandpass Filter Assembly	Bandpass Filter Assembly		Nondiversity
A38PS1 A38PS2	Panel, Power Supply	Power Supply		Nondiversity
UD40A1–A4		MLOS Antenna	6–Foot High Performance 8–Foot High Performance 10–Foot High Performance 6–Foot Grid	Site Dependent

Table 1–22. RPG Equipment Supplied and Variations

Ref Des	Nomenclature	Common Name	Option	Remarks
UD70/UD170	RPG Processor/Communications Assembly	RPGPCA Cabinet		
A1*+	Sun Ultra 5 Base Data Distribution Server	BDDS	NIC/SCSI card – A2 Blank – A3 Blank – A4	
A2	Cisco 3640 Router	Router	Network Module 2 LAN/2 WAN A0, A1 Serial 8A/S module A2	
A3*	Raritan Keyboard, Video, Mouse Switch	KVM Switch		
A4	Sun 17 Inch Monitor	Monitor		
A5/A6	Sun Keyboard and Mouse	Keyboard and Mouse		
A7+	Sun Ultra 10 Radar Product Generation Processor	RPG Processor	SCSI host adapter card – A2 Serial interface card – A3 Blank – A4 DIO controller card – A5	
A8	Jaz Archive Storage Device	Archive III		Disks have 2 GB Capacity. Used for backup purposes also.

– – – –

* Location and/or equipment existence is dependent on configuration

\+ Considered assembly item and comes with options installed.

Table 1–22. RPG Equipment Supplied and Variations (continued)

Ref Des	Nomenclature	Common Name	Option	Remarks
A9*	Jaz Archive Storage Device (Expansion)	Archive III		Optional, not at all sites.
A10	APC Power Administrator Masterswitch	APC Power Administrator	SNMP Module A1	Has 8 Power Receptacles
A11+	APC Uninterruptible Power Supply	UPS	SNMP Module – A2 Battery Module – A1BT1	Has 6 Power Receptacles
A12	Polycom RDA/RPG Gateway	Gateway		Built in CSU/DSU Module
A13	Cisco 2924 Local Area Network Switch	LAN Switch		
A14	Modem Rack w/ Power Supply	Dedicated/Dial Modem Rack (Codex 326x)	A1–A4 Dial Port Modems A5–A21 Dedicated Port Modems	A5 and A21 used in FAA Redundant and DoD systems only
A15, A16, A17	PTI 800 Communication Server	Comm. Server		
A18*	Channel Service Unit	CSU		NWS Only
A19*	Short Haul Modem	Short Haul Modem		Used with MLOS WBC
A20*	RS–232/RS–422 Converter	RS–232/RS–422 Converter		Used in same systems which contain a collocated PUP
A28/A29*	Baytech Power Administrator	Baytech Power Administrator		Used in FAA Redundant RPG

– – – –

* Location and/or equipment existence is dependent on configuration

\+ Considered assembly item and comes with options installed.

Table 1–22. RPG Equipment Supplied and Variations (continued)

Ref Des	Nomenclature	Common Name	Option	Remarks
UD72*	Remote BDDS Equipment	Remote BDDS		
A1*+	Remote Base Data Distribution Server Processor	Remote BDDS Processor	NIC/SCSI card – A2 Blank – A3 Blank – A4	
A2*	Sun 17 Inch Monitor	Remote BDDS Monitor		
A3*/A4*	Sun Keyboard and Mouse	Keyboard and Mouse		
UD73*	Cisco 2924 Local Area Network Switch	Remote LAN Switch		
UD74A1*	Cisco 2621 Router	Remote Router	CSU/DSU Module A2	
UD31	Relay Box	Relay Box		Used in FAA RPG Redundant
UD32*	Remote RDA Equipment	Remote RDA		Used in NWS RPG Redundant
UD32A1*	Terminal, Alphanumeric	RDA Maintenance Terminal		Used in NWS RPG Redundant
UD32A2*	Dual A/B Switch	A/B Switch		Used in NWS RPG Redundant

– – – –

* Location and/or equipment existence is dependent on configuration

\+ Considered assembly item and comes with options installed.

Table 1–22. RPG Equipment Supplied and Variations (continued)

Ref Des	Nomenclature	Common Name	Option	Remarks
UD32A3*	STATMUX	STATMUX		Used in NWS RPG Redundant
UD32A4*	Stand–alone Dial Port Modem	Modem		Used in NWS RPG Redundant

– – – –
* Location and/or equipment existence is dependent on configuration
\+ Considered assembly item and comes with options installed.

Table 1–23. MSCF Equipment Supplied and Variations

Ref Des	Nomenclature	Common Name	Option	Remarks
UD71	MSCF Equipment	MSCF		
A1+	Sun Ultra 5 Master System Control Function Processor	MSCF Processor	Dial modem card – A2 Blank – A3 SCSI host adapter card – A4	
A2	Sun 21 Inch Monitor	Monitor		
A3/A4	Sun Keyboard and Mouse	Keyboard and Mouse		
A5*	Dedicated–port Modem	MSCF Modem		Used with Distant MSCF not supported by frame relay service
A6	Jaz Backup Storage Device	Backup Device		Floppy Disk has 2 GB capacity
E2*	Surge Suppressor	Surge Suppressor		
E1	Surge Suppressor	Surge Suppressor		
UD79A1	Xerox/Tektronix Phaser 750 Color Printer	MSCF Printer		Black, Cyan, Magenta, and Yellow Toner Cartridges
UD75A1	Frame Relay Hub Router (Cisco 2621XM)	Frame Relay Hub Router		Used with MSCF Group supported by frame relay service

– – – –

* Location and/or equipment existence is dependent on configuration

\+ Considered assembly item and comes with options installed.

Table 1–24. PUP Equipment Supplied and Variations

Ref Des	Nomenclature	Common Name	Option	Remarks
UD41	PUP Data Processor	PUP Data Processor		
A1	Converter Rack Assembly	Converter Rack	Converter/Eliminator	Collocated RPG
A2	Modulus 9 Slot Rack w/Power Supply	Dedicated/Dial Port Modem Rack (Codex 326x)	1–2 Dial Port Modems 1–3 Dedicated Port Modems	
A2	Modem Rack Assembly	Dedicated Port Modem Rack (Fujitsu M1921L)	1–12 Modems	
A7	VME Chassis	VME Chassis	Base Narrowband Bd A2 Exp. Narrowband Bds A3–A9	 Expansion Ports
A15	SCSI Enclosure Assembly	Data Storage Assembly	150 MB Tape, 600 MB Mag Disk, 300 MB Opt Disk	
A16	CPU Assembly	Display Processor	Base Includes 8 MB CMM A6 Base Includes SELCHs A16 and A18 Base + SELCH A13 Base Includes ODC A17 Base + ODC A12	 Expansion for Archive IV Storage Expansion for Archive IV Storage
A22	SCSI Assembly	Exp Data Storage Assembly	600 MB Mag Disk	Standalone PUP
A27	Limited Distance Modem Rack	LDM Rack	3 Modems	Used with PUP Workstation Extension

Table 1–24. PUP Equipment Supplied and Variations (continued)

Ref Des	Nomenclature	Common Name	Option	Remarks
A28	Parallel Line Extender	Parallel Line Extender		Used with PUP Workstation
UD42		System Console		
UD43	Terminal, Alphanumeric	Application Terminal		
UD44	Graphics Tablet	Graphics Tablet		
UD45A1 UD45A2	Graphics Display Assembly	Graphics Display Assembly		
UD45A3 thru UD45A5	Limited Distance Modems	LDMs	1 – 3 modes	Used with PUP Workstation Extension
UD46	Audible Alarm	Audible Alarm		
UD47		Color Graphics Printer		
UD48, UD51	RGBS Line Driver/Equalizer	RGBS Line Driver/Equalizer		Used with PUP Workstation Extension

Table 1–25. RPIE Equipment Supplied and Variations

Ref Des	Nomenclature	Common Name	Option	Remarks
UD1	Equipment Shelter Assembly	Radar Equipment Shelter Assembly		Shelter UD7 with equipment
WG6	Filter, Bandpass, Waveguide	Spectrum Filter		Site Dependent
WG106	Filter, Bandpass, Waveguide	Spectrum Filter		Redundant RDA Site Dependent
UD2A12		Radome Temperature Sensor		Redundant
UD2A13		Radome Temperature Transmitter		Redundant
UD2HR1 – HR3		Radome Heaters	0 to 3	Site Dependent
UD7		Radar Shelter	10′ X 18′ 10′ X 24′ 20′ X 24′	RDA RDA/RPG Redundant RDA/RPG
A24	Auxiliary Alarm Box	Auxiliary Alarm Termination Panel		Redundant RDA
A29	Secondary Power Distribution Panel	Secondary Power Distribution Panel No. 2		Redundant RDA (NWS and FAA)
A30	Secondary Power Distribution Panel	Secondary Power Distribution Panel No. 3		Redundant RDA (NWS only)
A39	Damper Assembly	Xmtr Intake Damper No. 2		Redundant RDA
A40	Damper Assembly	Xmtr Exhaust Damper No. 2		Redundant RDA

Table 1–25. RPIE Equipment Supplied and Variations (continued)

Ref Des	Nomenclature	Common Name	Option	Remarks
A44	Indicator, Clogged Filter	Xmtr Clogged Filter Sensor No. 2		Redundant RDA
A47	Smoke Detector	Photoelectric Smoke Detector No. 2		Redundant RDA
A48	Discharge Sensor	AC1 Discharge Air Temperature Sensor No. 2		Redundant RDA
A49	Discharge Sensor	AC2 Discharge Air Temperature Sensor No. 2		Redundant RDA
A50	Sensor, Interior Temperature	Interior Temperature Sensor No. 2		Redundant RDA
A51	Discharge Sensor, Transmitter	Xmtr Duct Air Temperature Sensor No. 2		Redundant RDA
A52	Sensor, Exterior Temperature	Exterior Temperature Sensor No. 2		Redundant RDA
A53	Ionization Detector	Ionization Smoke Detector No. 2		Redundant RDA
A68	Surge Protector	Surge Protector No. 2		Redundant RDA (NWS and FAA)
A69	Surge Protector	Surge Protector No. 3		Redundant RDA (NWS only)
S35	Thermostat, Transmitter	Transmitter No. 2 Vent Thermostat		Redundant RDA
S36	Contractor, Magnetic	Contractor No. 2		Redundant RDA (NWS and FAA)

Table 1–25. RPIE Equipment Supplied and Variations (continued)

Ref Des	Nomenclature	Common Name	Option	Remarks
S37	Contractor, Magnetic	Contractor No. 3		Redundant RDA (NWS only)
TPS1	CEC–Coil Control	CEC Coil Control		Nonredundant RDA (NWS and DoD)
TPS2	CEC–Distribution Panel	CEC DP		Redundant RDA (NWS only)
UD8	MLOS Shelter, RDA	MLOS Shelter (RDA/RPG) Assembly		Shelter UD13 with equipments
UD10	Generator Shelter	Generator Shelter		
A6A1MT1 A6A2MT1	Sensor, Fuel Level	Fuel Level Sensor		Redundant RDA
A12		Room Air Temp Sensor No. 2		Redundant
TPS1	TPS Fused Disconnect	TPS Fused Disconnect		Nonredundant (NWS and DoD sites)
UD11	Steel Tower	Radar Tower	5 to 30 meters	Site Dependent
UD12	Radome Assembly	Radome		
UD13		MLOS Shelter (RDA/RPG)		
UD20		MLOS Tower (RDA)	Self–supporting Guyed	Site Dependent
UD40		MLOS Tower (RPG)	Self–supporting Guyed	Site Dependent
UD60	TPMS Shelter	TPMS	Types 1 – 9	Site Dependent
UD62	Transition Power Source	TPS		

Table 1–25. RPIE Equipment Supplied and Variations (continued)

Ref Des	Nomenclature	Common Name	Option	Remarks
UD63	Battery Cabinet	Battery Cabinet		
UD64	Maintenance Bypass Module (Types 5 and later)	MBM		
UD65	Supervisory Contact Module	SCM		

Table 1–26. Standard Tools List

Nomenclature	Description	Mfg./Part Number	Used On					
			RDA	RPG	MSCF	PUP	WBC	RPIE
Belt, Safety, Industrial	–	Supplied with Ladder Kit Assembly, P/N 172670X	X					X
Breaker, Bar	3/4″ Drive	Snap–On 112EE or equivalent	X					
Brush set, cleaning	1/2″, 2″, 4″	–	X					X
Bucket, 10 gal.	Plastic, light weight		X					
Cleaner, Vacuum	Standard shop style	HVU/NWN7 910–00–267–1215 or equivalent	X	X	X	X	X	X
Desoldering Bulb	Plastic tip removable	PN 33F105 Network Electronics	X					
Dolly, platform			X					
Dryer, hair	1200 watts	–						X
Electronic Connector Panel Punch (SERD 96)		234						X
Eye Dropper								X
Eye Bolt (SERD 83)		NAS 1053–06–010	X					
Eye Bolt (SERD 85)		NAS 1053–06–18	X					
Flashlight	–	–	X	X	X	X	X	X

Table 1–26. Standard Tools List (continued)

Nomenclature	Description	Mfg./Part Number	Used On					
			RDA	RPG	MSCF	PUP	WBC	RPIE
*Gauge Set, Feeler	16–20 pieces .005–.025 inches	–	X					
Glasses, safety								X
Gun, Grease with nozzle extension	14 oz. cap.	Snap–On/GA 473A or equivalent	X					
Gun, heat	750 °F/1100 °F	Snap–On/ET 16500 or equivalent						X
Gun, soldering	25/450 watts	Snap–On/ R450 or equivalent	X					X
Gun, tie wrap								X
Hammer	16 oz., dead blow ball peen	–						X
Handle, T–bar	60–inch	Snap–On/30 TQP	X					
Harness (SERD 105)	Small	DBI/SALA 1105754	X					X
	Medium	DBI/SALA 1105750	X					X
	Large	DBI/SALA 1105751	X					X
	X–Large	DBI/SALA 1105752	X					X
	XX–Large	DBI/SALA 1105753	X					X
Hat, hard safety								X

– – – – –

* Must have the ability to be stacked to measure between .010 and .070 inches.

Table 1–26. Standard Tools List (continued)

Nomenclature	Description	Mfg./Part Number	Used On					
			RDA	RPG	MSCF	PUP	WBC	RPIE
Hemostat, 10″ (Qty 2)								X
IC Extractor/ Insertion Tool Kit	–	Jameco 104707	X	X	X	X	X	X
IC Pin Straightener	–	Jameco 99362	X	X	X	X	X	X
Knife, Craftsman		99941–3203	X	X	X	X	X	X
Knife, utility		Industrial Safety Co. 4663 or equivalent	X	X	X	X	X	X
Knife, utility, replacement blades		Industrial Safety Co. 4664 or equivalent	X	X	X	X	X	X
Ladder	20–ft. extension	–	X					X
Ladder	6–ft. step	–	X	X		X		X
Lanyard, EZ Stop (SERD 94)	6–ft. break–away	DBI/SALA L3300DP6	X					X
Lanyard (SERD 103)	6–ft. positioning	Miller Equip 210WDLS6	X					X
Lanyard (SERD 104)	3–ft. break–away	DBI/SALA 1220007	X					X
Light, drop, incandescent	100w, 50 ft. cord	–	X					
Magnetic Base Holder (SERD 87)	Depot repair team only	CM 6416	X					
Mirror, inspection	–	–	X					
Multiplier, torque 3.3:1	1/2″ input – 3/4″ output	Snap–On/ YA290 or equivalent	X					

Table 1–26. Standard Tools List (continued)

Nomenclature	Description	Mfg./Part Number	Used On					
			RDA	RPG	MSCF	PUP	WBC	RPIE
Multiplier, torque 3.3:1		Snap–On/ YA300 or equivalent	X					
Nut driver set, hex	3/16″, 1/4″, 3/8″, 5/16″, 11/32″, 3/8″, 7/16″, 1/2″	–	X	X	X	X		X
Oiler, flexible nozzle	–	Snap–On/ OCF5	X					
Pan, drain	5 gallons		X					X
Pan	2 qt							X
Penlight			X					
Pliers set	4″ and 6″ diag. cutters, 4″ and 6″ needle nose, 6″ and 8″ slip joint, 10″ arc joint, 7″ straight jaw, 7″ curved jaw locking		X	X	X	X	X	X
Pliers, miniature, cutters			X			X		
Punch set, pin	1/16″, 3/32″, 1/8″, 5/32″, 3/16″, 1/4″							X
Ratchet Set	Phillips–tip head					X		
Ratchet Set	1/2″ drive		X					X
Rod, Continuous Thread (SERD 84)	Depot repair team only	92580A112	X					

Table 1–26. Standard Tools List (continued)

Nomenclature	Description	Mfg./Part Number	Used On					
			RDA	RPG	MSCF	PUP	WBC	RPIE
Rule, Multiple Folding (SERD 91)	Six foot, carpenter's type TYCLIST3	GGG–R–791	X					X
Scale, machinist, 6″	–	–	X					X
Scale, platform	Human weight scale 0–300 pounds (most economical)	–						X
Screwdriver set, alignment non–metallic	–	–				X	X	
Screwdriver set, electronic thin blade	1/8″ X 3″, 1/8″ X 6″, 1/8″ X 8″, 1/8″ blade, 1/8″ X 4″, 3/16″ X 4″, 1/4″ X4 ″, 1/4″ X 6″, 5/16″ X8 ″, 3/8″ X 12″		X	X	X	X	X	X
Screwdriver set, miniature	.055″, .070″, .1″ flat–tip and Phillips–tip		X					X
Screwdriver set, offset reversible ratchet	1/4″ and 3/8″ flat–tip #1 and #2 Phillips–tip		X			X		
Screwdriver set, flat–tip	1/8″ X 4″, 3/16″ X 4″, 1/4″ X 4″, 1/4″ X 6″, 5/16″ X 8″, 3/8″ X 12″		X	X	X	X	X	X

Table 1–26. Standard Tools List (continued)

Nomenclature	Description	Mfg./Part Number	Used On					
			RDA	RPG	MSCF	PUP	WBC	RPIE
Screwdriver set, Phillips–tip	#1 X 3″, #2 X 4″, #2 X 8″, #3 X 6″	–	X	X	X	X	X	X
Screwdriver set, Posi–drive tip	#1, #2	–						X
Socket, adapter	1/2″ to 3/4″	Snap–On/ GLA 12A or equivalent	X					
Socket, adapter	3/4″ to 1/2″	Snap–On/ GLA62 or equivalent	X					
Socket, extension bar	6″ length for 1/2″ drive	Craftsman/ 9HT44131 or equivalent	X					
Socket, 1–1/2″ 12 pt. 3/4″ drive (Qty. 2)	–	Snap–On/ LDH482 or equivalent	X					
Socket, 1–1/2″ 12 pt. 1″ drive	–	Snap–On/ LDH483A or equivalent	X					
Socket 1–5/8″12 pt, 3/4″ drive	–	Snap–On/ LDH522 or equivalent	X					
Socket set, 3/8″ drive	–	–	X					X
Socket set, 1/2″ drive	–	–	X					X
Socket set, hex head, 3/8″ drive	1/8″, 5/32″, 3/16″, 7/32″, 1/4″, 5/16″, 3/8″, 7/8″	–	X					X

Table 1–26. Standard Tools List (continued)

Nomenclature	Description	Mfg./Part Number	Used On					
			RDA	RPG	MSCF	PUP	WBC	RPIE
Socket set, metric, 3/8″ drive	6 through 26mm (21 pieces, 12 pt. sockets)	–						X
Socket set, screwdriver bits, 3/8″ drive	1/4″, 5/16″, 3/8″–flat–tip; #1, #2, #3 Phillips–tip	–	X					
Socket set, 1/4″ drive (standard)	–	–						X
Socket set, combination, metric	15mm, 17mm, 19mm							X
Socket, Allen, metric	4mm	–						X
Stool, step	–	–	X	X		X		
Tap, #10, Hand	–	Granger 4AHN4 or equivalent		X				
Tap, Wrench, T–Handle	–	Granger 4AKL8 or equivalent		X				
Thermometer (°F)	–	–						X
Tool kit, Extraction/ Insertion (SERD 95)		NW–6000–SP1	X	X		X		
Tuning tool, hex non–metallic	–	–	X					
Wrench, allen set	–	–	X					X
Wrench, crescent small								X
Wrench, filter	75–80mm	–						X

Table 1–26. Standard Tools List (continued)

Nomenclature	Description	Mfg./Part Number	Used On					
			RDA	RPG	MSCF	PUP	WBC	RPIE
Wrench, filter	90–95mm	–						X
Wrench, large pipe								X
Wrench set, adjustable	4″, 8″, 12″, 18″ length	–	X	X		X		X
Wrench set, ball hex long	3/32″, 1/8″, 5/32″, 3/16″	–	X					
Wrench set, combination	1/4″, 5/16″, 11/32″, 3/8″, 7/16″, 1/2″, 9/16″, 5/8″, 11/16″, 3/4″, 13/16″, 7/8″, 15/16″, 1″, 1–1/8″, 1–1/4″, 1–3/8″, 1–1/2″, 1–5/8″	–	X	X	X	X	X	X
Wrench set, combination metric	6 through 27mm (22 pieces, 12 pt. sockets)	–						X
Wrench set, hex–key long.	.050″, 1/16″, 3/32″, 1/8″, 5/32″, 3/16″, 1/4″, 5/16″, 3/8″	–	X			X	X	X
Wrench set, hex–key, long, metric	1.5, 2, 2.5, 3, 4, 5, 6, 8, 10, 12mm	–				X		X

Table 1–26. Standard Tools List (continued)

Nomenclature	Description	Mfg./Part Number	Used On					
			RDA	RPG	MSCF	PUP	WBC	RPIE
Wrench set, socket 1/4″ drive	3/16″, 7/32″, 1/4″, 9/32″, 5/16″, 11/32″, 3/8″, 7/16″, 1/2″, 12 pt. socket; 3″ and 6″ extension bars; quick release ratchet			X				X
Wrench set, socket 3/8″ drive	5/16″, 3/8″, 7/16″, 1/2″, 9/16″, 5/8″, 11/16″, 3/4″, 13/16″, 12 pt. sockets; 3″ and 6″ extension bars; quick release ratchet; 3/8″ to 1/4″ adapter	–	X					X
Wrench set, socket 1/2″ drive	7/16″, 1/2″, 9/16″, 5/8″, 11/16″, 3/4″, 13/16″, 7/8″, 15/16″, 1″, 1–1/8″, 1–1/4″, 12 pt. sockets: 3″, 6″, 10″ extension bars: quick release ratchet; 1/2″ to 3/8″ adapter	–	X					X
Wrench, torque	5–75 ft.–lb							X

Table 1–26. Standard Tools List (continued)

Nomenclature	Description	Mfg./Part Number	Used On					
			RDA	RPG	MSCF	PUP	WBC	RPIE
Wrench, torque	SMA connector (8 in–lb, 5/16″, open–end)	Omni spectra/ 2098–5065–54 or equivalent	X				X	
Wrench, torque	Click–type 10–120 in–lb, 3/8″ drive							X
Wrench, torque	Click–type 30–200 in–lb, 3/8″ drive, fixed ratchet	Snap–On/ QJR217C or equivalent	X					X
Wrench, torque	Click–type, 15–100 ft.–lb, 3/8″ drive, fixed ratchet	Snap–On/ QJR–2100E or equivalent	X					X
Wrench, torque	Click–type, 30–250 ft.–lb, 1/2″ drive, fixed ratchet	Snap–On/ QJR 3250A or equivalent	X					
Wrench, torque	Click–type 100–600 ft.–lb	Snap–On/ QJR 4600B	X					
Wrench, torque	Click–type 100–1000 in–lb, 3/8″ drive							X

Table 1–27. Standard Test Equipment List

Nomenclature	Mfg./Part Number	Used On					
		RDA	RPG	MSCF	PUP	WBC	RPIE
Adapter, BNC male–to–BNC male	Pomona/ 3533	X					
Adapter, SMA female–to–BNC female	Pomona 4291 or equivalent	X					
Adapter, type N female–to–SMA female	Pomona/ 4299 or equivalent	X					
Adapter, type N female–to–SMA male	Pomona/ 4298 or equivalent	X					
Adapter, SMA female–to–SMA female	Pomona/ 4285 or equivalent	X					
Adapter, right angle SMA female–to–SMA male	Pomona/ 4282 or equivalent	X					
Adapter, BNC–T (female–male–female) (Qty.2)	Pomona/ 3285 or equivalent	X					
Adapter, dual banana plug–to–BNC female	Pomona/ 1269 or equivalent	X					
Adapter, SMA female–to–BNC male	Pomona/ 4220 or equivalent	X					
Adapter, BNC male–to–SMA female	Pomona/ 4289 or equivalent	X					

– – – – –

* Cables and leads are to be manufactured or procured locally.

** These items are Shared Support Equipment and must be ordered from the National Logistics Supply Center.

Table 1–27. Standard Test Equipment List (continued)

Nomenclature	Mfg./Part Number	Used On					
		RDA	RPG	MSCF	PUP	WBC	RPIE
Adapter, coax/waveguide (SERD 57)	HPS281A	X					
Adapter, type N male to SMA female	Pomona/ 44297 or equivalent	X				X	
Adapter, type N female–to–type N female	Pomona/ 3841 or equivalent	X					
**Adapter, Waveguide, Rectangular Flange (SERD 92)	54418A–284	X					X
Analyzer, capacitance (SERD 65 or SERD 12)	Multi–meter, Handheld 8060A or equivalent	X					
Attenuator, coaxial, 30 dB, type N connector (used for sensor calibration only)	Supplied with HP8484 Power Sensor	X					
Attenuator, coaxial, 10 dB, type N connector	HP8491 series or equivalent	X					
Attenuator, coaxial, 20 dB, 50 ohm, 20 watts	Narda/766 –20 or equivalent					X	

– – – – –

* Cables and leads are to be manufactured or procured locally.

** These items are Shared Support Equipment and must be ordered from the National Logistics Supply Center.

Table 1–27. Standard Test Equipment List (continued)

Nomenclature	Mfg./Part Number	Used On					
		RDA	RPG	MSCF	PUP	WBC	RPIE
Attenuator, coaxial, 30 dB, type N connector (SERD 38A)	HP8491 series or equivalent	X					
Attenuator, Step 0–110 dB (SERD 45)	HP8496A OPT 001–UK6	X					
Attenuator, Step 0–11 dB (SERD 44)	HP8494A OPT 001–UK6	X					
Attenuator, set (SERD 38)	HP11581A –890 or equivalent	X					
Attenuator, Type N High–Power (SERD 82)	Loral 768–6 or 23–6–34	X					
Box, RS–232 breakout	Data Tracker MISCO/ TR1054		X		X		
Bridge, resistance	Milliohm meter HP4328A or equivalent	X					
Cable, power sensor, 5–foot	HP11730A or equivalent	X					
Cable, power sensor, 20–foot	HP11730C or equivalent	X					

– – – – –

* Cables and leads are to be manufactured or procured locally.

** These items are Shared Support Equipment and must be ordered from the National Logistics Supply Center.

Table 1–27. Standard Test Equipment List (continued)

Nomenclature	Mfg./Part Number	Used On					
		RDA	RPG	MSCF	PUP	WBC	RPIE
*Cable, test, RF coaxial, SMA male/SMA male connectors, 6 feet	RG–142B	X					
*Cable, test, TWINX BNC male/TWINX male connectors, 10 feet (Qty. 2)	RG–108	X					
*Cable, test, coaxial, 6–ft. BNC male–to–male connectors	RG–59	X					
*Cable, test coaxial 8–foot BNC male–to BNC male connectors (Qty. 2)	RG–59	X					
*Cable, test coaxial 8–foot, SMA male –to–SMA male	RG–142B	X					X
*Cable, test RF coaxial, SMA male/SMA male connectors 10–feet	RG–142B	X					
Calculator, scientific		X					
Clip, alligator (standard pin lead alligator clip)	Fluke/ AC70 (compatible with Y8131 test leads) or equivalent						X
Clip, dip, fourteen–pin	3M/TC140 or equivalent	X					
Counter, RF frequency (SERD 47)	HP5350 OPT 001 or equivalent	X					

– – – – –

* Cables and leads are to be manufactured or procured locally.

** These items are Shared Support Equipment and must be ordered from the National Logistics Supply Center.

Table 1–27. Standard Test Equipment List (continued)

Nomenclature	Mfg./Part Number	Used On					
		RDA	RPG	MSCF	PUP	WBC	RPIE
Data Tracker (SERD 19)	Misco TR 1054		X		X		
Detector, crystal (SERD 18)	HP23 B OPT 003, HP 423B or equivalent	X					
Dip Clip, 16 pin (SERD 21)	923700				X		
Dip Clip, 28–pin (SERD 50)	923718	X					
Drain hose pedestal oil w/ 15 ft. hose (SERD 28)	3F6132 or 1219680–201	X					
Generator, RF signal, 10 MHz – 8 GHz (SERD 49)	Gigatronic /model 600.01–8 Option 3 or equivalent	X					
Generator, signal, audio frequency (SERD 67)	HP3312A or equivalent	X					
Gauge, belt tension	Cummins ST1293 or equivalent						X
Gauge, dynamometer	0–200 Grams	X					
Gauge, dynamometer	20–600 Grams				X		

– – – – –

* Cables and leads are to be manufactured or procured locally.

** These items are Shared Support Equipment and must be ordered from the National Logistics Supply Center.

Table 1–27. Standard Test Equipment List (continued)

Nomenclature	Mfg./Part Number	Used On					
		RDA	RPG	MSCF	PUP	WBC	RPIE
Gauge, feeler	.25mm and .51 mm						X
Gauge, test, pressure	15 PSIG	X					X
Gauge, test, pressure	30–60 PSIG	X					X
High voltage probe (SERD 48)	P6015A	X					
Hose, garden type (Qty. 2)	25 ft. 1/2 in I.D.	X					X
Hydrometer (check battery – specific gravity)	Generic Automo-tive type						X
Interconnection kit (SERD 46)	HP11716A	X					
Leads, test, multimeter	Fluke/ TL70 (included with model 87 multi–meter) or equivalent						X
Leads, test, multimeter	Fluke/Y81 34/ YU8140	X	X	X	X	X	X
Oil test set, portable (SERD 51)	OC51 or OC60D	X					
Measurement instrument, excess noise ratio (ENR) (SERD 97)**	NT–187–1	X					
Meter, power (SERD 9)	HP436A or equivalent	X					

– – – – –

* Cables and leads are to be manufactured or procured locally.

** These items are Shared Support Equipment and must be ordered from the National Logistics Supply Center.

Table 1–27. Standard Test Equipment List (continued)

Nomenclature	Mfg./Part Number	Used On					
		RDA	RPG	MSCF	PUP	WBC	RPIE
Multimeter, digital, handheld (SERD 12)	Fluke/ model 87, fluke/ model 8060A or equivalent	X	X	X	X	X	X
Multimeter test lead set	Fluke/ 41834, Fluke/ 8140 or equivalent	X	X	X	X	X	X
Milliohmmeter high resistance meter (SERD 58)	HP4328A	X					
Network cable tester (SERD 100)	Computer Network Associates 78–110		X				
Ohmmeter	Fluke/ 8040	X					
Oscilloscope (SERD 11)	Tektronix/ model 2236A–02, 2235A, TDS420 or equivalent	X			X	X	
Pad, minimum loss 75/70 ohm	–					X	
Power sensor (SERD 27)	HP8481H	X					
Power splitter (SERD 36)	Narda 3324–4	X					
Power supply adjusting tool		X					

– – – – –

* Cables and leads are to be manufactured or procured locally.

** These items are Shared Support Equipment and must be ordered from the National Logistics Supply Center.

Table 1–27. Standard Test Equipment List (continued)

Nomenclature	Mfg./Part Number	Used On					
		RDA	RPG	MSCF	PUP	WBC	RPIE
Probe, logic (SERD 55)	HP545A or equivalent	X			X		
Radiation hazard meter (SERD 99)**	RAHAM–3 or equivalent						
RF cable, 8 ft. (Qty. 6) Type N–male	RG–214	X					
Sensor, power, –30 dBm to +20 dBm (SERD 43)	HP8481A or equivalent	X					
Sensor, power, –70 dBm to –20 dBm (SERD 10)	HP8484 or equivalent	X					
Spectrum analyzer (SERD 16)	HP8563A	X					
Telephone	–	X	X	X	X		
Termination, 124 Ohms, BNC male connectors (Qty. 2)	–	X					
Termination, 50 Ohms, SMA male (SERD 37)	HP908A (Type N), Pomona/ 4286 or equivalent	X					
Termination, shorting BNC male	Pomona/ 5085 or equivalent	X					
Termination, 100 Ohms, BNC male connectors	Pomona/ 3840–10 or equivalent	X					
Test probes, with 0.08″ probe						X	

– – – – –

* Cables and leads are to be manufactured or procured locally.

** These items are Shared Support Equipment and must be ordered from the National Logistics Supply Center.

Table 1–27. Standard Test Equipment List (continued)

Nomenclature	Mfg./Part Number	Used On					
		RDA	RPG	MSCF	PUP	WBC	RPIE
Tester, Belt Tension	Gates Part. No. 12998F or equivalent	X					
Thermometer, Fahrenheit							X
Transmission Line Test Set (SERD 15)	AM–48		X		X		
Watch, stop		X					

– – – – –

* Cables and leads are to be manufactured or procured locally.

** These items are Shared Support Equipment and must be ordered from the National Logistics Supply Center.

Table 1–28. Special Purpose Tools and Fixtures

Nomenclature	Mfg./Part Number	Used On					
		RDA	RPG	MSCF	PUP	WBC	RPIE
Adapter, connector	FA402 or PS232184		X				
Adapter, connector RJ45–DB9F	Baytech 9FRJ45PC–1		X				
Adapter, cable, RJ45–DB25F	2300027–301		X				
Adapter, cable, RJ45–DB9	Cisco 74–0495–01		X				
Adapter, cable, DB25(M)	PTI 160P019720		X				
Adapter, null modem, DB–25F to DB–25F (SERD 106)	2200128–202		X				
Adapter, test	FA440 or 8714A50PC22		X				
Ammeter (SERD 17)**		X					
Assembly, filament load (SERD 31)**	Paramax/ 1219695–301 or equivalent	X					
Attachment, oil line drain, with 15–ft. hose (Hose, drain assembly)	Tedico/3F6132 or equivalent	X					
Backlash post	RSI–EMS/ 20505–8021–X	X					
Backlash flag	RSI–EMS/ 30505–8022	X					
Bases, magnetic with extension rods (Qty. 2)	Snap–On/CM 6416	X					

– – – – –

* This item is not a SERD and would have to be manufactured locally.

** These items are Shared Support Equipment and must be ordered from the National Logistics Supply Center.

*** This item is perishable; purchase as needed.

Table 1–28. Special Purpose Tools and Fixtures (continued)

Nomenclature	Mfg./Part Number	Used On					
		RDA	RPG	MSCF	PUP	WBC	RPIE
Cable kit, C–shackle & lifting (SERD 75) (Depot repair team only)	4263–9349	X					
Cable, adapter, focus coil (SERD 30)**	1219683–301	X					
Cable, AT modem, DB9F–DB25M	EVMBMC–0010		X				
Cable, crossed, RJ45–8 pin	RJ08X007		X				
Cable, loopback, PTI "Y Cable" (SERD 101)	ROC/ 2200101–201		X				
Cable, loopback, PTI	PTI 160P03411 REV 11 FINE0031 or 2210042–206 or RS530/232 NULL Rev CFS9831		X				
Cable, DIO loopback (SERD 26)	CCC/Model 17–380				X		
Cable, MPC Loopback (SERD 40)	CCC/Model 17–679				X		
Cable, RJ45, straight–through pin–out			X				
Cable, RJ45, swapped pin–out			X				
Cable, Cisco, RJ45	Cisco 72–0876–01 or 72–1259–01		X				

– – – – –

* This item is not a SERD and would have to be manufactured locally.

** These items are Shared Support Equipment and must be ordered from the National Logistics Supply Center.

*** This item is perishable; purchase as needed.

Table 1–28. Special Purpose Tools and Fixtures (continued)

Nomenclature	Mfg./Part Number	Used On					
		RDA	RPG	MSCF	PUP	WBC	RPIE
Cable, null modem, RS–232/530 (SERD 102)	ROC/ 2210042–206		X				
Cable, RS–232/422 loopback (SERD 53)	1221800 or 3713–0002				X		
Cable, serial, 9–pin	APC 940–0103		X				
Cable, UPS serial, 9–pin,	APC 940–0024 or APC 940–1524		X				
Chain hoist (SERD 5)	SH–10	X					
Conductive bags					X		
Connector, DIO loopback (FAA only)	2320057–301		X				
Connector, graphic tablet loopback (SERD 42)	1219679–301 or 4292–0011				X		
Crane, curved outrigger (SERD 66)	Paramax/ 4214–2262	X					
Connector, modem eliminator Loopback	Paramax/ 1221801				X		
Davit crane, RDA tower (SERD 6)	1213760–201 or SD1984 REVB	X					
Dial indicator test set (SERD 86) (Depot repair team only)	PMF135	X					
Digital radio test system (SERD 68)**	HP3782A	X	X				

– – – – –

* This item is not a SERD and would have to be manufactured locally.

** These items are Shared Support Equipment and must be ordered from the National Logistics Supply Center.

*** This item is perishable; purchase as needed.

Table 1–28. Special Purpose Tools and Fixtures (continued)

Nomenclature	Mfg./Part Number	Used On					
		RDA	RPG	MSCF	PUP	WBC	RPIE
Disk, optical test	CCC Part No. 94–788	X			X		
Dolly (service), Klystron oil tank (SERD 3)	WEC/86D064	X					
Dolly (storage), Klystron platform	WEC/2D089 35G01	X					
Eight line Comms multiplexer Loop cable (SERD 69)	17–517R01					X	
Electrical wire wrap tool	Standard Pneumatic No. 615	X					
Extender, card (HSP) (SERD 64)	7180771	X					
Extender, card (MLOS) (SERD 62)	SD–97059 OPT A					X	
Extender, card (MLOS) (SERD 63)	SD–97273 OPT A					X	
Extender, card, transmitter (SERD 56)	1D22733G01	X					
Extractor, card, graphics processor (SERD 60)	513917				X		
Extractor, card, PSP/HSP (SERD 24)	PL7172731–00	X					
Eye, lifting, 0.375–24, 6″ shank	UNF–2A	X					
Fixture, AGC test (SERD 8)	R400–SE16 or 1219229	X					
Fixture, antenna counterweight (SERD 13)** (Depot repair team only)		X					
Fixture, elevation lifting assembly (SERD 7)** (Depot repair team only)		X					

– – – – –

* This item is not a SERD and would have to be manufactured locally.

** These items are Shared Support Equipment and must be ordered from the National Logistics Supply Center.

*** This item is perishable; purchase as needed.

Table 1–28. Special Purpose Tools and Fixtures (continued)

Nomenclature	Mfg./Part Number	Used On					
		RDA	RPG	MSCF	PUP	WBC	RPIE
Fuel level sensor test fixture (Qty. 2)*							X
Indicators, dial, (Qty. 2) .001″ accuracy	Snap–On/P MF135	X					
Kit, ESD component handling (wrist strap with ground clip and conductive mat with ground clip)	3M Product No. 8012 or equivalent	X	X	X	X	X	X
Kit, oil transfer pump (SERD 2)	Paramax/ 1219694 or 4292–0021	X					
Kit, panel repair***	ESSCO/ Panel Repair Kit						X
Kit, wire wrap tool		X			X		
Klystron adjustment tool	M709	X					
Klystron container, storage (SERD 4)	2D08935G01	X					
Leveling device (SERD 90)	98–12	X					
Loopback connector modem eliminator (SERD 54)	1221801–301 or 3713–0003				X		
Oil transfer pump kit (SERD 2)	Paramax/ 1219694 or 4292–0021	X					
Outrigger, curved (SERD 66)**	Paramax/ 4214–2262	X					
Pan, oil drip	–	X					
Pin engagement, AZ/EL encoder (FSP) (SERD 89)	2100001	X					

– – – – –

* This item is not a SERD and would have to be manufactured locally.

** These items are Shared Support Equipment and must be ordered from the National Logistics Supply Center.

*** This item is perishable; purchase as needed.

Table 1–28. Special Purpose Tools and Fixtures (continued)

Nomenclature	Mfg./Part Number	Used On					
		RDA	RPG	MSCF	PUP	WBC	RPIE
Potentiometer	200 ohm, 20 turn, with two wire leads						X
Pump, electrical, with 1/2–inch O.D. hose fitting	–	X					
Radiation meter, EMR20 (SERD 99)		X					
Screws, jacking, 0.25–20 (Qty. 3)	UNC–2A	X					
Service dolly, Klystron (SERD 3)	86D064	X					
Sling, Klystron (SERD 1)	WSP 4415	X					
Switch sleeve spanner wrench (SERD 74)	246368008–101	X					
Tape, SCSI, EEPROM (burn type)	Paramax or SDF/E EPROM Program Tape	X					
Tensiometer, dial indicator (SERD 80)	GD–30	X					
Tester, belt tension (SERD 81)	12988–F	X					
Tool, power supply adjusting (small flat–tip screwdriver, preferably plastic)	–	X					
Tool, Klystron adjustment (SERD 61)	M709	X					
Transmission test set (SERD 68)**	HP3782A						
Vacuum cleaner, cannister HEPA (SERD 98)	3685 Eureka or Equivalent	X					X

– – – – –

* This item is not a SERD and would have to be manufactured locally.

** These items are Shared Support Equipment and must be ordered from the National Logistics Supply Center.

*** This item is perishable; purchase as needed.

Table 1–28. Special Purpose Tools and Fixtures (continued)

Nomenclature	Mfg./Part Number	Used On					
		RDA	RPG	MSCF	PUP	WBC	RPIE
Wire unwrapping tool for AWG 28–32° wire	Standard Pneumatic No. 682	X					
Wire wrap bit for AWG 30–32 wire	Standard Pneumatic No. 53124	X					
Wire wrap sleeve for AWG 30–32 wire	Standard Pneumatic No. 60341	X					

– – – – –

* This item is not a SERD and would have to be manufactured locally.

** These items are Shared Support Equipment and must be ordered from the National Logistics Supply Center.

*** This item is perishable; purchase as needed.

Table 1–29. Consumables/Expendables Matrix

Nomenclature	Description/Mfg./Part Number	Used On					
		RDA	RPG	MSCF	PUP	WBC	RPIE
Adhesive tape	2” Masking Tape						X
Alcohol, denatured	–	X					
Alcohol, isopropyl	–		X	X	X		
Bag, ESD conductive	–	X	X	X	X	X	X
Battery	1.5V, D–size	X					
Battery	12V, 24–133F00	X			X		
Battery	7.2 NICAD, 1A20785H01	X					
Battery	APC Part # 910–8011 or equivalent		X				
Battery cartridge (UPS)	APC Part # RPC24 or equivalent		X				
Brush, paint	1/4–inch	X					
Brush, scrub							X
Brush, bristle (soft and stiff)							X
Bucket	Plastic 1–gallon	X	X	X	X	X	X
Caulk	WHITE/ESSCO/688–3 or Colored/ESSCO/688–2						X
Cleaner, glass	Windex or equivalent		X	X	X		
Cleaning kit, drive head, Q1C–11	Perfect Data Computer Care Products/102791–12 or equivalent	X			X		
Cloth, lint–free	–	X	X	X	X	X	X
Cloth, lint–free, oil absorbent	–	X					
Clothing, protective (4 pair)	–	X					
Container	1–pint	X					

Table 1–29. Consumables/Expendables Matrix (continued)

Nomenclature	Description/Mfg./Part Number	Used On					
		RDA	RPG	MSCF	PUP	WBC	RPIE
Container	1–gallon	X					
Container, (Qty. 3)	5–gallon	X					
Detergent, liquid		X	X	X	X	X	X
Element, air cleaner	Service Cartridge/CA–230PL						X
Filter, air	Fiberglass, frame 18″ X 18″ X 1″ TA 20″ X 20″ X 1″ AC 24″ X 24″ X 1″ E/G 18″ X 24″ X 1″ TPMS–Type 3 (Qty. 2 required) 16″ X 25″ X 2″ ECU 16″ X 20″ X 1″ TPS						X
Filter, air, transmitter (UD3)	Fiberglass media 18″ X 20″ X 2″(LPP) UD7MP3–1 18″ X 18″ X 1″ (FSP) UD7MP3	X					
Filter, air conditioner	20″ X 30″ X 1″ UD7AC1MP1 UD7AC2MP1 (Normal Use) 20″ X 30″ X 2″ UD7AC1MP1–1 UD7AC2MP1–1 (Dirty Environment)	X					
Filter, air focus coil	Glass mat M41414AQ or equivalent, cut to 13.25″ X 1.88″	X					
Filter, fuel	3903640 (FF 5052)						X
Filter, fuel	3903410 (FF 5038)						X
Filter, oil	3908615 (LF 3349)						X

Table 1–29. Consumables/Expendables Matrix (continued)

Nomenclature	Description/Mfg./Part Number	Used On					
		RDA	RPG	MSCF	PUP	WBC	RPIE
Filter, UD6 (compressor filter on heat exchanger)	Dielectric Communications/ 35561 or service kit which also contains head, cylinder, pan oil grill P/N 32125	X					
Filter, UD10A4MP1 UD10A5MP1, (input damper assembly)							X
Fuel							X
Flux, solder	–					X	
Fuses:							
.2 Amp/250V time delay (Qty. 1)	Bussman/MDL–2/10 or equivalent (Do not substitute with Littelfuse) 62A1F1						X
.5 Amp, GMT	TTI/160104 or equivalent	X					
.5 Amp/250V Fast (Qty. 4)	Littel/3AG 312500	X			X		
1.0 Amp/600V current limiting, Type M (Midget) Type K (Qty. 3)	Littelfuse/KLKD 1 or equivalent 62A2F13 62A2F14 62A2F15						X
1.0 Amp/250V Fast (Qty. 4)	Littel/3AG 312001				X		
1.0 Amp/250V slow blow (Qty. 1)	Littelfuse/3AG 313001 or equivalent 62A11A1F1						X
1.5 Amp/500V time delay, midget (Qty. 1)	Bussman/FBNQ 1–1/2; Gould/ATQ 1–1/2 or equivalent 64A1F1						X

Table 1–29. Consumables/Expendables Matrix (continued)

Nomenclature	Description/Mfg./Part Number	Used On					
		RDA	RPG	MSCF	PUP	WBC	RPIE
1.5 Amp/250V Slow Blow (Qty. 5)	Littel/3AG 313015						
1.5 Amp/250V Fast (Qty. 5)	Littel/3AG 312015	X			X		
2.5 Amp/250V Fast (Qty. 5)	Littel/3AG 312025				X		
2.5 Amp (Qty. 2)	Harris/075–20028–16 or equivalent					X	
3.0 Amp/125V Slo Blo (Qty. 1)	Littelfuse/3AG 313003; Bussman/MDX3(250V) or equivalent 62W3F1/62F20						X
3.0 Amp (Qty. 2)	Harris/075–20028–18 or equivalent					X	
4.0 Amp/250V Fast (Qty. 1)	Littel/3AG 312004				X		
5.0 Amp/250V	Mil–Spec/ FO3A250V5A or equivalent	X					
5.0 Amp/250V	Mil–Spec/ FO2A250V5A or equivalent	X					
8.0 Amp/250V Fast Blow (Qty. 5)	Littel/3AG 313008		X				
9.0 Amp/60 Volt Buss Fast (Qty. 5)	GBB/Ceramic						
10.0 Amp/125V	Mil–Spec/ FO3A125V10A or equivalent	X					
10.0 Amp/500V time delay, midget (Qty. 1)	Bussman/FNQ 10; Gould/ATQ10 or equivalent						X

Table 1–29. Consumables/Expendables Matrix (continued)

Nomenclature	Description/Mfg./Part Number	Used On					
		RDA	RPG	MSCF	PUP	WBC	RPIE
10.0 Amp/600V current limiting, Type M, (Midget) (Qty. 10)	Littelfuse/KLKD 10 or equivalent 62A2F1 thru 62A2F10						X
15.0 Amp/300V Slow Blow (Qty. 5)	Buss/SC–15 or CCC/24–071F00 or equivalent	X			X		
20.0 Amp/125V	Mil–Spec/ FO3A125V20A or equivalent	X					
40.0 Amp/250V (Qty. 3)	Bussman FRN–R–40 10A20F1 10A20F2 10A20F3						X
60.0 Amp/250V (Qty. 3)	Bussman FRN–R–60 10A20F1 10A20F2 10A20F3						X
70.0 Amp/600V (Qty. 3)	Gould/A60X70–4TI or equivalent 61A1F16 61A1F17 61A1F18						X
80.0 Amp/600V time delay, Class J (Qty. 3)	Bussman/LPJ–80SP; Gould/AJT80 or equivalent 62F61 62F62 62F63						X

Table 1–29. Consumables/Expendables Matrix (continued)

Nomenclature	Description/Mfg./Part Number	Used On					
		RDA	RPG	MSCF	PUP	WBC	RPIE
100 Amp/250V	Class RK5; Littelfuse/ FLNR–100–ID or equivalent Type 1, 2, 4 61A5S2F1 61A5S2F2 61A5S2F3 Type 1, 2, 3, 4 61A5S3F1 61A5S3F2 61A5S3F3						X
110 Amp/250V (Qty. 3)	Class RK5; Littelfuse/ FLNR–110–ID						X
200 Amp/250V (Qty. 6)	Class RK5; Littelfuse/ FLNR–200–ID or equivalent						X
200 Amp/700V semiconductor (Qty. 6)	Bussman/170M3415 or equivalent 62A8A1F41, F42 62A8A2F43, F44 62A8A3F45, F46						X
200 Amp/250V time delay (Qty. 6)	Class RK5; Gould/ TR200R or equivalent						X
200 Amp/250V (Qty. 3)	200 Amp/250 Volt FLNR–200–ID TYPE 1, 2, 3, 4 61A5S1F1 61A5S1F2 61A5S1F3 TYPE 3 61A105S2F1 61A105S2F2 61A105S2F3						X
300 Amp/250V time delay (Qty.3)	Class RK5; Gould/ TR300R or equivalent						X

Table 1–29. Consumables/Expendables Matrix (continued)

Nomenclature	Description/Mfg./Part Number	Used On					
		RDA	RPG	MSCF	PUP	WBC	RPIE
Gaskets, waveguide	MS42411/2–005 or equivalent	X					
Gloves, rubber (4 pair)	–	X					
Glycol, ethylene (antifreeze)							X
Grease	Tektronix/006–2037–00 0 or equivalent				X		
Grease	MIL–G–23827	X					
Grease	Type NGLI, Grade 2						X
Grease, synthetic	Aeroshell–17	X					
Heat sink compound							X
HEPA vacuum		X					
Bag, disposable, dust	60295						
Filter, HEPA	60666						
Filter, motor	38333						
Hose	60289–1						
Tool set, micro	54002						
Lamps, bulb							X
Markers, lead	–	X					X
Oil	SAE 10W or 20W						X
Oil							X
–10 °F and below	SAE 5 synthetic						
–10 °F to 14 °F	SAE 10W–30						
14 °F and above	SAE 15W–40						
32 °F and above	SAE 20W–40						
Oil, dielectric (25 gal.)	Shell/Dials AX or equivalent	X					
Oil, lubricating	SAE 20	X					
Oil, machine, light	3N						X

Table 1–29. Consumables/Expendables Matrix (continued)

Nomenclature	Description/Mfg./Part Number	Used On					
		RDA	RPG	MSCF	PUP	WBC	RPIE
Oil, synthetic	SCH 75W, American Lubricants (CAGE Code 12939)/SHC 624, Mobil Oil Corp (CAGE Code 19135)	X					
Oil, synthetic, low temprature	Tribolube L–3, Aerospace Lubricants (CAGE Code 66164)	X					
O–ring, gearbox	5–069N674–70	X					
Paint, touch–up	–	X					
Pen, ball point	–						X
Polish, automobile type	–						X
Printer, color							
Adhesive tape	–				X		
Color transfer, four Color roll 275 prints per roll	016–0898–000				X		
Paper, 8–1/2″ X 11″	016–0891–00				X		
Transparencies, 8–1/2″ X 11″	016–0895–00				X		
Thermal head cleaner					X		
Printer, color (Xerox/Tektronix Phaser 750)							
Paper, 8–1/2″ X 11″ 24 lb. bond	Xerox P/N 016–1368–00 or equivalent (16 to 24 bond)			X			
Transparency sheets, 8–1/2″ X 11″	Xerox P/N 016–1427–00 or equivalent			X			
Black ink cartridge	Xerox P/N 016–1803–00 (12,000 pages) or 016–1807–00 (5,000 pages)			X			

Table 1–29. Consumables/Expendables Matrix (continued)

Nomenclature	Description/Mfg./Part Number	Used On					
		RDA	RPG	MSCF	PUP	WBC	RPIE
Cyan ink cartridge	Xerox P/N 016–1800–00 (10,000 pages) or 016–1804–00 (4,000 pages)			X			
Magenta ink cartridge	Xerox P/N 016–1801–00 (10,000 pages) or 016–1805–00 (4,000 pages)			X			
Yellow ink cartridge	Xerox P/N 016–1802–00 (10,000 pages) or 016–1806–00 (4,000 pages)			X			
Fuser, 110 volt	Xerox P/N 016–1839–00			X			
Fuser roll	Xerox P/N 016–1843–00			X			
Color imaging unit	Xerox P/N 016–1841–00			X			
Transfer kit	Xerox P/N 016–1842–00			X			
Main charge grid	Xerox P/N 016–1665–00			X			
Resistor, 4700 ohm		X					
Resistor, 47,000 ohm		X					
Resistor, 10 megohm		X					
Rope	1/4–inch nylon	X					
Signs, warning	–	X					
Smoke, aerosol can	–						X
Soap, liquid	–						X
Solder, rosin core	60/40					X	X
Sponges	–	X	X	X	X	X	
Swabs, foam tip, flexible	6–inch, 104772–1	X					
Swabs, lint–free	6–inch	X					
Tags, safety	–	X					
Tape, adhesive	–		X		X		

Table 1–29. Consumables/Expendables Matrix (continued)

Nomenclature	Description/Mfg./Part Number	Used On					
		RDA	RPG	MSCF	PUP	WBC	RPIE
Tape, blank cartridge (SCSI)	600 ft./3M/DC600A or 600 ft./Concurrent/Cat. No. PD4–023	X			X		
Tape, 8MM	8MM, 18093	X					
Tape, teflon (Blower Assembly)	2 in x 36 yards/99739/ TEMP–R–TAPE–T–2, 99737–	X					X
Tubing, heat shrink	–						X
Towels, paper	–						X
Water, tap	–	X	X	X	X	X	X
Wire							X
Wraps, tie	–	X	X	X	X		X

Table 1–30. Computer Programs

CPCI	Title	Function
01	RDA Status and Control Program	RDA Operation
02	Signal Processing Program	RDA Operation
03	RPG Program	RPG Operation
04	Product Display Program	PUP Operation
05	Graphics Display Program	PUP Operation
06	RDA System Operational Test Program	RDA Diagnostics
07	Data Processor Diagnostics	RDA/PUP DP Diagnostics
08	Graphics Display Diagnostics	PUP Diagnostics
10	Operating System (OS/32)	RDA/PUP Support
12	RPG COTS Software	RPG Operation
14	Remote RDA/RPG Access (Wiretap)	RDA Support
23	RPG Support Software (Test Tools)	RPG Support

Table 1–31. WSR–88D Technical Manual Sets

NWS Number	FAA TM Number	AF TO Number	Navy TM Number	Title/Description	RDA Set	RPG Set	PUP Set
EHB 6–500	TI 6345.1 V1	31P1–4–108–1	EM400–AA–MMM–010	System Description	X	X	X
EHB 6–501	TI 6345.1 V2	31P1–4–108–4	EM400–AB–IPB–010	Illustrated Parts Breakdown	X	X	X
EHB 6–502	TI 6345.1 V3	31P1–4–108–06	EM400–AC–WUC–010	Work Unit Code	X	X	X
EHB 6–503	TI 6345.1 V4	31P1–4–108–6	EM400–AM–MOO–010	Inspection, Lubrication, and Maintenance Requirements Manual	X	X	X
EHB 6–503–1	TI 6345.1 V4	31P1–4–108–6WC–7	EM400–AD–MMM–010	PMI Work Cards (PUP)			X
EHB 6–503–2	TI 6345.1 V4	31P1–4–108–6WC–8	N/A	PMI Work Cards (RDA, RPG, RPIE, and Wideband)	X	X	
EHB 6–505	TI 6460.1 V6	31P1–4–108–107	EM400–AL–MMM–010/ SCSI	SCSI Enclosure Installation and Theory of Operation Manual	X	X	X
EHB 6–510	TI 6345.1 V7	31P1–4–108–152	N/A	Maintenance Instructions, RDA	X		
EHB 6–510–1	TI 6460.1 V33	31P1–4–108–168–1	N/A	User's Guide, RDA	X		
EHB 6–510–2	TI 6345.1 V29	31P1–4–108–178–1	N/A	User's Guide, RDASOT	X		

– – – – –

NOTES:

1. With a Distant MSCF (DoD and FAA Systems), this manual will be required at the MSCF, not the RPG site.

Table 1–31. WSR–88D Technical Manual Sets (continued)

NWS Number	FAA TM Number	AF TO Number	Navy TM Number	Title/Description	RDA Set	RPG Set	PUP Set
EHB 6–511	TI 6345.1 V8	31P1–4–108–112	N/A	Operations and Maintenance Instructions, Transmitter System	X		
EHB 6–512	TI 6460.1.V9	31P1–4–108–21	N/A	Model HA–4 Compressor/ Dehydrator Instruction Manual	X		
EHB 6–512–1	TI 6460.1 V17	31P1–4–108–211	N/A	Model HA–4X2 Dual Outlet Compressor/Dehydrator Instruction Manual	X		
EHB 6–513	TI 6345.1 V13	31P1–4–108–32	N/A	Maintenance Instructions, Antenna Pedestal System, (Limited Production)	X		
EHB 6–514	TI 6345.1 V22	31P1–4–108–201	N/A	Operations and Maintenance Instructions, Pedestal System, (Full Production)	X		
EHB 6–525	TI 6345.1 V49	31P1–4–108–452–1	N/A	Maintenance Instructions, RPG		X	
EHB 6–526	TI 6345.1 V50	31P1–4–108–451–1	N/A	Operations Instructions, RPG		X[1]	
EHB 6–527	TI 6345.1 V52	31P1–4–108–8–1	N/A	Phaser 750 Color Printer		X	
EHB 6–530	TI 6345.1 V15	31P1–4–108–182	EM400–AE–MMM–010	Maintenance Instructions, PUP			X
EHB 6–531	TI 6460.1 V16	31P1–4–108–61	EM400–AF–OPI–010	Operations Instructions, PUP Group			X

– – – – –

NOTES:

1. With a Distant MSCF (DoD and FAA Systems), this manual will be required at the MSCF, not the RPG site.

Table 1–31. WSR–88D Technical Manual Sets (continued)

NWS Number	FAA TM Number	AF TO Number	Navy TM Number	Title/Description	RDA Set	RPG Set	PUP Set
EHB 6–531–1	TI 6460.1 V31	31P1–4–108–78–1	EM400–AG–GYD–010	User's Guide, PUP/RPG, Operational Position (PUP/RPGOP)			X
EHB 6–532	TI 6460.1 V18	31P1–4–108–138–1	EM400–AH–OPI–010	4693D Color Image Printer User Manual			X
EHB 6–533 V1	TI 6460.1 V23	31P1–4–108–132–1	EM400–AJ–MMM–010	4693D Color Image Printer, Field Service, Manual, Vol. 1 Print Engine Information			X
EHB 6–533 V2	TI 6460.1 V24	31P1–4–108–132–2	EM400–AJ–MMM–101	4693D Color Image Printer, Field Service Manual, Vol. 2 Interface Information.			X
EHB 6–536	N/A	31P1–4–108–460–1	EM400–AT–OPI–010	Operations Instructions Open Principal User Processor			X
EHB 6–537	N/A	31P1–4–108–459–2	EM400–A4–MMO–010	Maintenance Instructions Open Principal User Processor Medium/Large			X
EHB 6–538	N/A	31P1–4–108–458–2	EM400–A3–MMO–010	Maintenance Instructions Open Principal User Processor Small			X
EHB 6–539	N/A	N/A	N/A	Operator Handbook Open Principal User Processor			X
EHB 6–541	N/A	N/A	N/A	Microwave Line–of–Sight Maintenance Manual	X		

– – – – –

NOTES:

1. With a Distant MSCF (DoD and FAA Systems), this manual will be required at the MSCF, not the RPG site.

Table 1–31. WSR–88D Technical Manual Sets (continued)

NWS Number	FAA TM Number	AF TO Number	Navy TM Number	Title/Description	RDA Set	RPG Set	PUP Set
EHB 6–545	TI 6345.1 V51	31P1–4–108–2	N/A	Maintenance Instructions, WBC (Wideband Communications) Group	X	X	
EHB 6–550	TI 6345.1 V20	31P1–4–108–101	N/A	Real Property Installed Equipment System Manual	X		
EHB 6–551	TI 6460.1 V21	31P1–4–108–191	N/A	Real Property Installed Equipment Group	X		
EHB 6–551–1	TI 6460.1 V34	31P1–4–108–271	N/A	Bard: 60WA Heat Pump and Air Conditioner Owner's Manual 2100–034A	X		
EHB 6–551–3	TI 6460.1 V36	31P1–4–108–281	N/A	Chemtron: Fire Systems Micro Junior Control Panel	X		
EHB 6–551–4	TI 6460.1 V37	31P1–4–108–357	N/A	Chemtron: Micro 1EV Control Panel	X		
EHB 6–551–5	TI 6460.1 V38	31P1–4–108–291	N/A	Cummins: 80KW Operation and Maintenance Manual, B Series Diesel Engine Bulletin No. 3810205–05 Printed 6–88	X		
EHB 6–551–6	TI 6460.1 V39	31P1–4–108–311	N/A	Cutler–Hammer: NEMA Instructions for Safe Installation, Operation, and Maintenance of Panelboards PUB16491 (PB1.1 – 1979)	X		

– – – – –

NOTES:

1. With a Distant MSCF (DoD and FAA Systems), this manual will be required at the MSCF, not the RPG site.

Table 1–31. WSR–88D Technical Manual Sets (continued)

NWS Number	FAA TM Number	AF TO Number	Navy TM Number	Title/Description	RDA Set	RPG Set	PUP Set
EHB 6–551–7	TI 6460.1 V40	31P1–4–108–327	N/A	Drexelbrook: Installation and Operating Instruction for Series 508–11, –12, –13, –14 Level Transmitters 408–2200–LM EDO 4–87–247	X		
EHB 6–551–8	TI 6345.1 V41	31P1–4–108–332	N/A	ESSCO: Technical Manual TM88–15 Model S38–90 Radome	X		
EHB 6–551–9	TI 6460.1 V42	31P1–4–108–341	N/A	Onan: 80KW Operator's Manual DGDA Gen Sets 960–0143, 10–89	X		
EHB 6–551–10	TI 6460.1 V43	31P1–4–108–347	N/A	Onan: 80KW Installation Manual, DGDA Gen Sets 50–150KW, 960–0610, 9–90	X		
EHB 6–551–11	TI 6460.1 V44	31P1–4–108–361	N/A	Onan: OT III Operator's Manual, OT III Transfer Switch Utility–to–GenSet Automatic Control 962–0113 Spec G 4–88	X		
EHB 6–551–12	TI 6460.1 V45	31P1–4–108–367	N/A	Onan: OT III Installation Manual, OT III Transfer Switch Utility–to–GenSet Automatic Control 962–0600 Spec G 4–88	X		

– – – – –

NOTES:

1. With a Distant MSCF (DoD and FAA Systems), this manual will be required at the MSCF, not the RPG site.

Table 1–31. WSR–88D Technical Manual Sets (continued)

NWS Number	FAA TM Number	AF TO Number	Navy TM Number	Title/Description	RDA Set	RPG Set	PUP Set
EHB 6–551–13	TI 6460.1 V46	31P1–4–108–362	N/A	Onan: OT III Service Manual, OT III Transfer Switch Automatic Control 962–0512 4–88	X		
EHB 6–552	TI 6460.1 V25	31P1–4–108–221	N/A	Kohler: Operations and Maintenance Instructions Standby Generator Sets	X		
EHB 6–553	T16345.1 V47	N/A	N/A	Real Property Installed Equipment for Redundant Systems	X		
EHB 6–554–3	N/A	31P1–4–108–447	N/A	Electric Toilet Unit Installation/Maintenance Manual, Model WB	X		
EHB 6–554–4	N/A	N/A	N/A	Unit Heater Installation and Maintenance Instructions Type CWH 2000 (Series B) and CWH 3000 (Series B)	X		
EHB 6–554–5	N/A	31P1–4–108–457–2	N/A	Powerware 9315–50 Transition Power Source Service Manual	X		
EHB 6–554–6	N/A	N/A	N/A	Marvair ComPac I and ComPac II (ECU) Product Manual, Models AVP12–20–24–30–36–42–48 –60	X		

– – – – –

NOTES:

1. With a Distant MSCF (DoD and FAA Systems), this manual will be required at the MSCF, not the RPG site.

Table 1–31. WSR–88D Technical Manual Sets (continued)

NWS Number	FAA TM Number	AF TO Number	Navy TM Number	Title/Description	RDA Set	RPG Set	PUP Set
EHB 6–560	TI 6460.1 V28	31P1–4–108–251	N/A	Level II Recorder, Operation and Maintenance Instructions	X		
EHB 6–561	TI 6460.1 V26	31P1–4–108–238–1	N/A	EXB–8500 8mm Cartridge Tape Subsystem User's Manual	X		
EHB 6–562	TI 6460.1 V27	31P1–4–108–248–1	N/A	EXB–10i Cartridge Handling Subsystem User's Manual	X		
EHB 6–563	T16460.1 V32	31P1–4–108–261	N/A	APC Back–ups, Models 250, 400, 450, 600, 900, and 1250	X		

– – – – –

NOTES:

1. With a Distant MSCF (DoD and FAA Systems), this manual will be required at the MSCF, not the RPG site.

Section 1–5. RPG and MSCF System Security

1–5.1 INTRODUCTION.

This section provides a background of the RPG and MSCF equipment and functions along with the requirements for security measures to be in place for the RPG and MSCF. This section provides an overview of the NEXRAD security plan for the RPG and MSCF.

1–5.2 BACKGROUND.

The RPG is the primary link to the successful dissemination of timely and accurate weather radar products generated by the WSR–88D to a varied number of customers from three government agencies, DOC, DoD, and DOT. Meteorological forecasts, watches, and warnings derived from WSR–88D products have the capability to provide timely information to protect lives and property from severe weather phenomenon. The MSCF is a man/machine interface that allows operators and maintenance technicians to interact with the RPG processor operating system, application graphics, and maintenance programs. The MSCF provides a GUI interface for easy access to RPG controls and commands. The ability of the RPG to function unimpaired is essential to WSR–88D operations. The ability of the MSCF to function is not essential. The RPG can work without the MSCF. However, due to the capabilities of the MSCF to access and to control the RPG, security measures are established to protect the MSCF and thereby, to protect the RPG.

1–5.2.1 RPG Group. The RPG group consists of the RPGPCA, wideband communication links, and narrowband communication links. The RPGPCA includes components that can be remotely accessed. Wideband communication links connect the RDA to the RPG. Narrowband communications links provide communications with associated users and non–associated users. For the NWS RPG group, certain DoD groups, and FAA groups, a LAN interface to the AWIPS provides a high speed TCP/IP associated user connection.

1–5.2.2 RPG Function. The RPG receives base data from the RDA group and processes the data using stored algorithms to develop a set of derived meteorological products. The resulting product set, including the base products, is made available for distribution over various communication links to AWIPS and OPUP workstations and to other user systems. The RPG is capable of distributing RDA digital–format base data to base data/users via the BDDS. The RPG functional group includes all the hardware and software required for real–time generation, storage, and distribution of products for operational use. It also includes the hardware and software required for terminal access, status monitoring, error detection, product archiving, and hydrometeorological data processing. Operational information about the application functionality/GUI interface for the MSCF can be found in NWS EHB 6–526 for operators, or in NWS EHB 6–525 for maintenance technicians.

1–5.2.3 MSCF Group. The MSCF group is comprised of an MSCF terminal suite, backup storage device, color printer, and surge suppressor. For DoD and FAA systems, the MSCF group also includes a frame relay hub router.

1–5.2.3.1 Local MSCF. NWS systems have local MSCFs. With the NWS systems, the MSCF is located locally (within the same building) with the RPGPCA. The local MSCF has a direct TCP/IP path to the router in the RPGPCA. The router provides a serial out of bandwidth connection to the power administrator and a direct TCP/IP connection to the LAN switch.

1–5.2.3.2 Distant MSCF. DoD and FAA systems have distant MSCFs. The distant MSCF may be located miles from the RPG (which is housed in the RDA shelter). A distant MSCF is connected to the RPG via a narrowband communication link using dedicated–port modems or via frame relay using CSU/DSUs at both the MSCF and RPG. The distant MSCF combines the actual MSCF control and monitoring functionality (LAN switch access) and the power administrator control functionality.

1–5.2.4 MSCF Function. The MSCF is the man/machine interface that allows the operator and maintenance technician to interact with the RPG processor operating system, application graphics, and maintenance programs. The MSCF provides control over RPG processing functions by permitting the selection of alphanumeric products to be routinely generated and a product subset to be archived. It also provides the interface to access the operating system, initialize the RPG processor, and perform first level analyses of system malfunctions.

1–5.3 SYSTEM SECURITY.

The system security for the RPG, MSCF, and their resources will use management, personnel, operational, and technical controls to ensure that the RPG and MSCF groups are safeguarded against harmful acts, either inadvertent or deliberate. The NEXRAD security plan and system administrators are utilized to implement safeguards for the RPG and MSCF groups and their resources. All system users are responsible for aiding the system administrator by adhering to the established security plan and informing the system administrator or a supervisor of suspected security breeches and identifying security vulnerabilities.

1–5.3.1 NEXRAD Security Plan. The system security objectives for the RPG and MSCF groups are documented in a NEXRAD security plan. The NEXRAD security plan is distributed to each RPG user location and may be modified to meet more stringent agency–specific (DOC, DoD, DOT) requirements.

1–5.3.1.1 RPG and MSCF Access To Users. Access to information and products generated or stored by either the RPG or the MSCF group is granted only to authorized users. In order to prevent unauthorized access to the RPG or MSCF and their resources, system administrators are responsible for maintaining user accounts and access rights.

1–5.3.1.2 RPG Availability. The RPG and MSCF groups implement a line replaceable unit maintenace policy coupled with automated software and hardware security mechanisms to recover from failures. Detailed troubleshooting procedures are specified in Maintenance Instructions, Radar Product Generator manual (NWS EHB 6–525). The RPG and MSCF groups also implement security mechanisms and procedures to detect or prevent security infringements that could lead to a software outage or degradation of its processing capabilities. The safeguarding of the RPG and MSCF and their resources from unauthorized users is to be continuously maintained by system users through agency established security procedures and operating system controls. Detailed system

administrator procedures are specified in the Operation Instructions, Radar Product Generation manual (NWS EHB 6–526).

1–5.3.1.2.1 Backup and Recovery. All RPG and MSCF user locations will maintain a full backup of all RPG and MSCF site–specific software (e.g., system software, application software, and adaptation data). Differential backups (to backup all data changes and/or additions since the last full backup) will provide the current state of site–specific data. The Radar Operations Center (ROC), provides system operational and application software and configuration for system reloads. When recovery is required, software backups facilitate a full recovery of the RPG with minimal loss of product availability to users. Detailed backup procedures are specified within the operation instructions, RPG manual (NWS EHB 6–526) and/or maintenance instructions, RPG manual (NWS EHB 6–525).

1–5.3.1.3 System Integrity. The integrity of the RPG is critical. The integrity of the MSCF helps to support the integrity of the RPG. RPG data is relied upon in daily operations, including life threatening conditions. The NEXRAD security plan, properly utilized, safeguards the system integrity of the RPG and the MSCF.

1–5.3.1.3.1 Group Integrity. The MSCF contains display features which provide the system maintainers and administrators the capability to validate the correct operation of the RPG hardware, software, and firmware elements.

1–5.3.1.3.2 Data Integrity. RPG and MSCF data must be protected against malicious destruction and inadvertent modification. The RPG and MSCF groups employ layered logical and physical access controls to protect RPG data, and the RPG and MSCF systems from corruption.

1–5.3.1.4 Accountability. The RPG and MSCF groups require that the system administrator utilize accountability mechanisms. These security mechanisms, when properly implemented, identify and authenticate all personnel attempting system access before access is granted.

The RPG and MSCF provide authorized users the capability to create, maintain, and modify certain files and a record of these auditable events is maintained for a period of 90 days. Detailed system administrator procedures are specified within the Operation Instructions, Radar Product Generation manual (NWS EHB 6–526).

1–5.3.1.4.1 Authenticity. Identification and authentication (I&A) ensures that only users authorized to perform functions within the RPG and MSCF groups are allowed access. To authenticate all personnel, the RPG and MSCF groups use individual logons and passwords to identify each individual user and to associate all auditable events to that individual.

1–5.3.1.4.2 Access Control. The use of access lists, logons, and passwords are the primary means to access and request data from the RPG via the MSCF or an authorized system user. The individual RPG and MSCF user locations are responsible for the physical, administrative, and personnel safeguards to control access to the network assets (e.g., terminals, printers, cables, and routers). Discretionary access control (DAC), also known as file protection and control, is used by the RPG and MSCF groups as an enforcement mechanism to ensure that all users having access to files have a need–to–know for those files. Detailed system administrator procedures are specified within the Operation Instructions, Radar Product Generation manual (NWS EHB 6–526).

1–5.3.2 Security Management. RPG and MSCF user locations are responsible for assigning a system administrator knowledgeable in the information technology used in the RPG and MSCF groups and security/system administration requirement for the system installed at their location. Detailed system administrator procedures are specified within the Operation Instructions, Radar Product Generation manual (NWS EHB 6–526).

1–5.3.2.1 Personnel Security. All personnel at their respective user locations have a responsibility to alert their supervisor and/or the system administrator of any individual who may pose a security risk to the RPG or MSCF group. Individuals who are dismissed from their positions under unfavorable circumstances are to be immediately denied system access. All area and system access privileges are revoked prior to notification of the individual.

1–5.3.3 Physical Security. Physical security of the RPG and MSCF groups at each user location is provided using area barriers and personnel monitoring. The effects of disasters, such as fire, water, and wind damage, must be controlled and minimized to the greatest extent economically feasible. Safeguards such as locks, barriers, and alarm systems, are used when economically feasible to prevent and detect unauthorized area access, tampering, and destruction of RPG or MSCF group network resources from intentional and unintentional human acts.

1–5.3.3.1 Resource Protection. The RPG and MSCF groups contain physical devices and provide logical functions for system security, data processing, data storage, and analysis. Unauthorized use, modification, or destruction of these resources could have an adverse impact on human safety and continued system operations. Security mechanisms of the RPG and MSCF groups and physical security are used to protect system resources from unauthorized personnel, and to prevent the fraud, waste, and abuse of RPG and MSCF group resources.

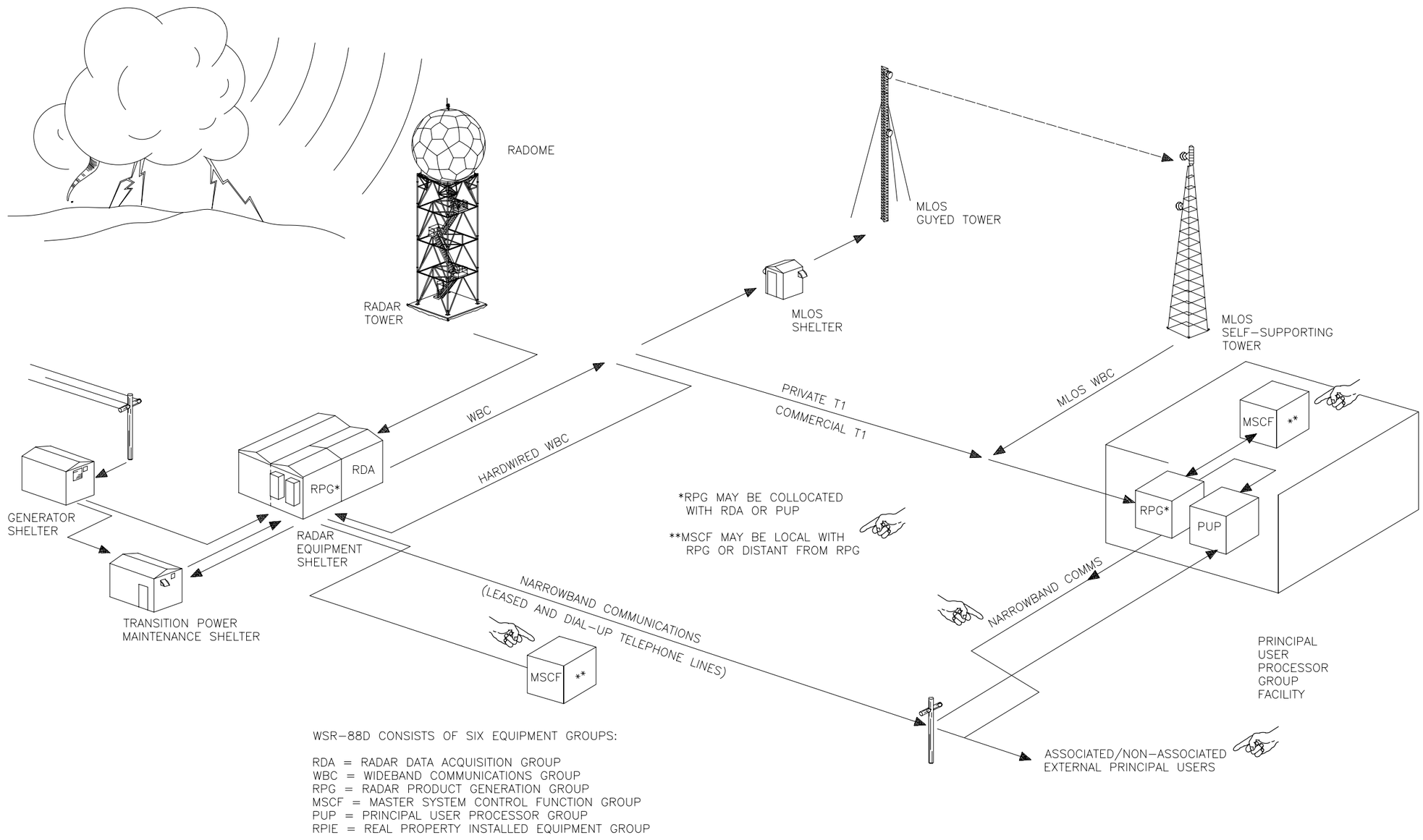

NX1567

Figure FO1–1. Doppler Meteorological Radar WSR–88D, Pictorial Overview

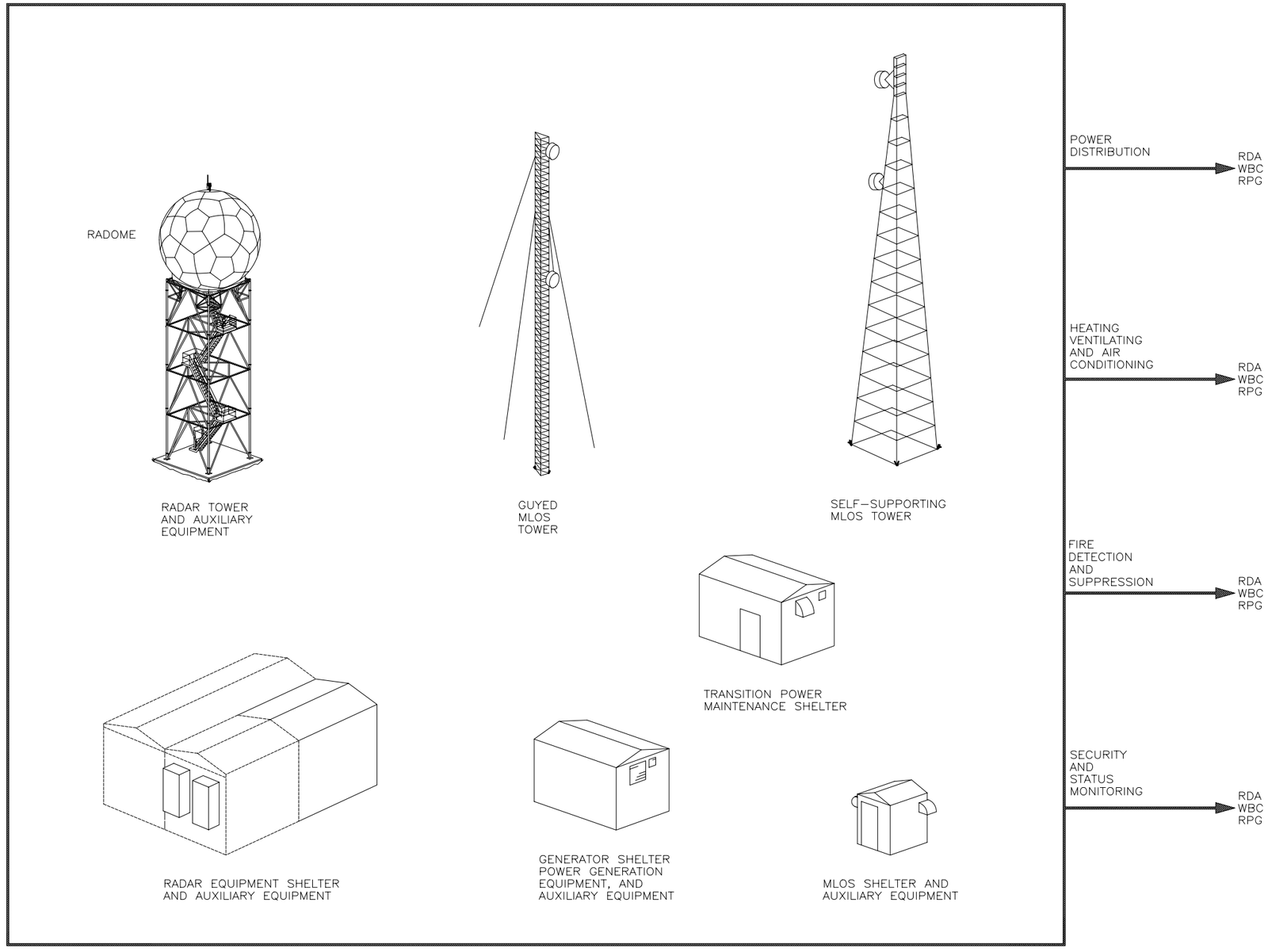

NX1518

Figure FO1–2. Doppler Meteorological Radar WSR–88D, Simplified Pictorial Functional Flow Diagram (Sheet 1 of 2)

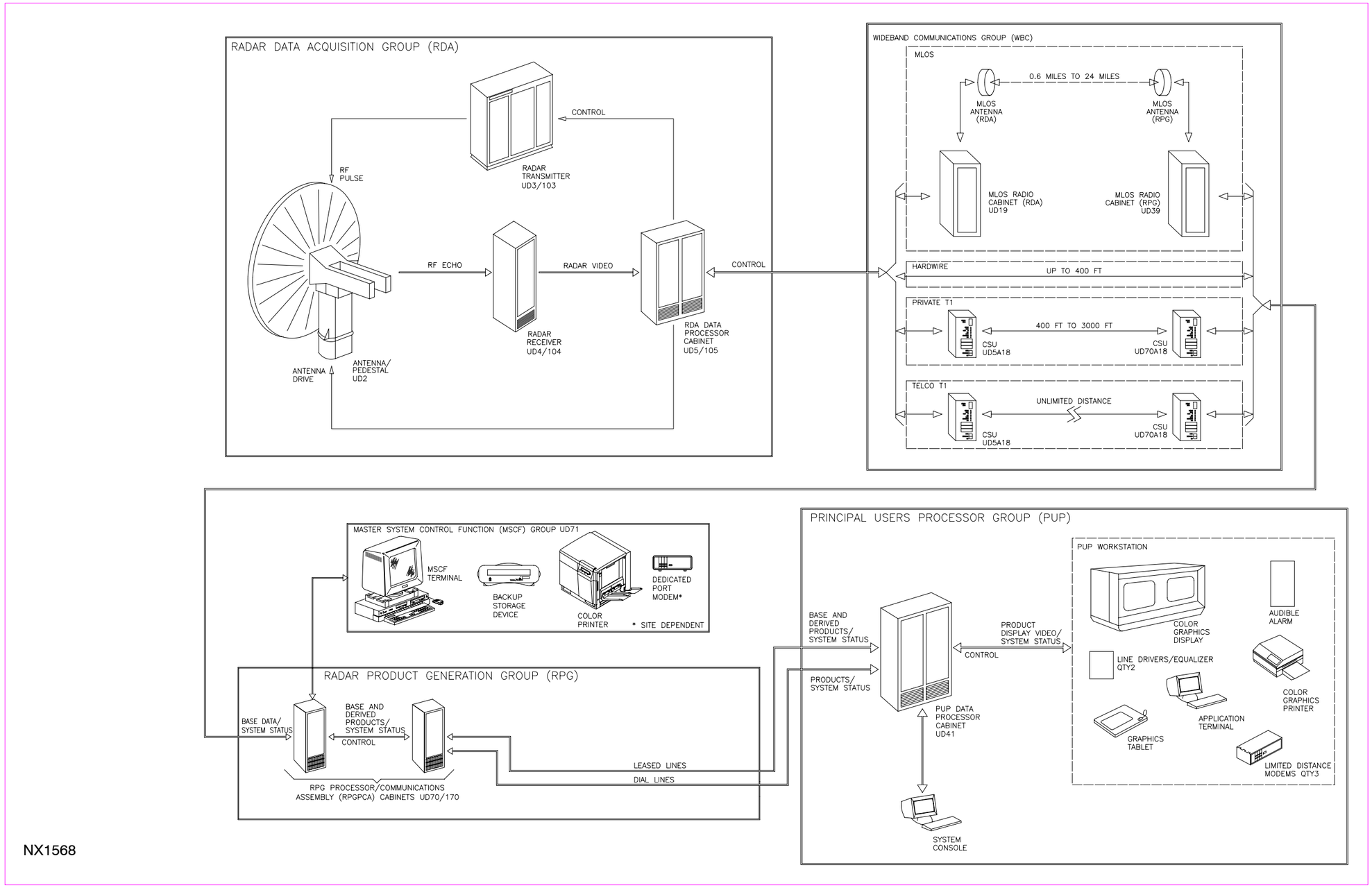

Figure FO1–2. Doppler Meteorological Radar WSR–88D, Simplified Pictorial Functional Flow Diagram (Sheet 2 of 2)

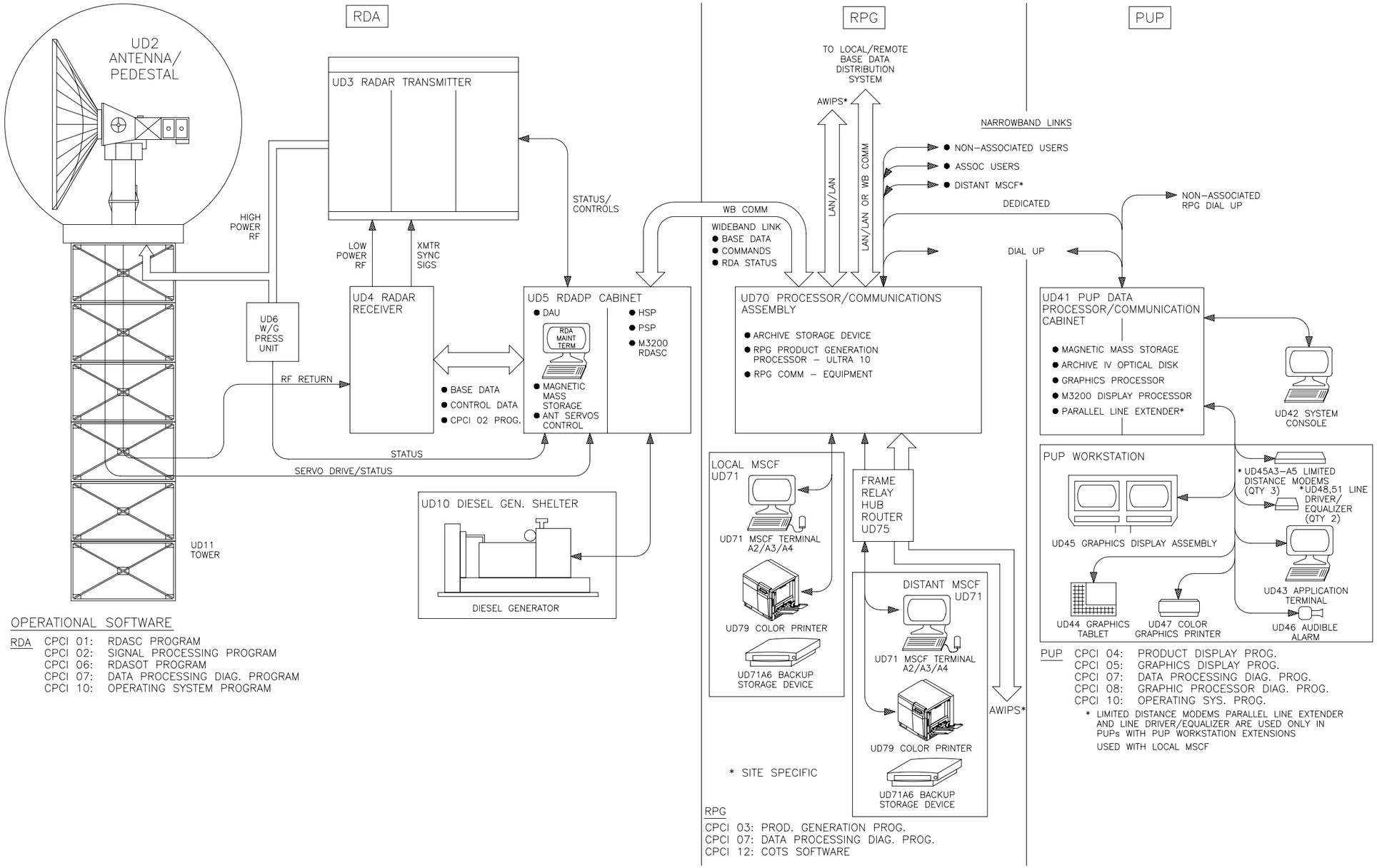

Figure FO1–3. System Program and Operating Station Interrelationships, Pictorial Flow Diagram

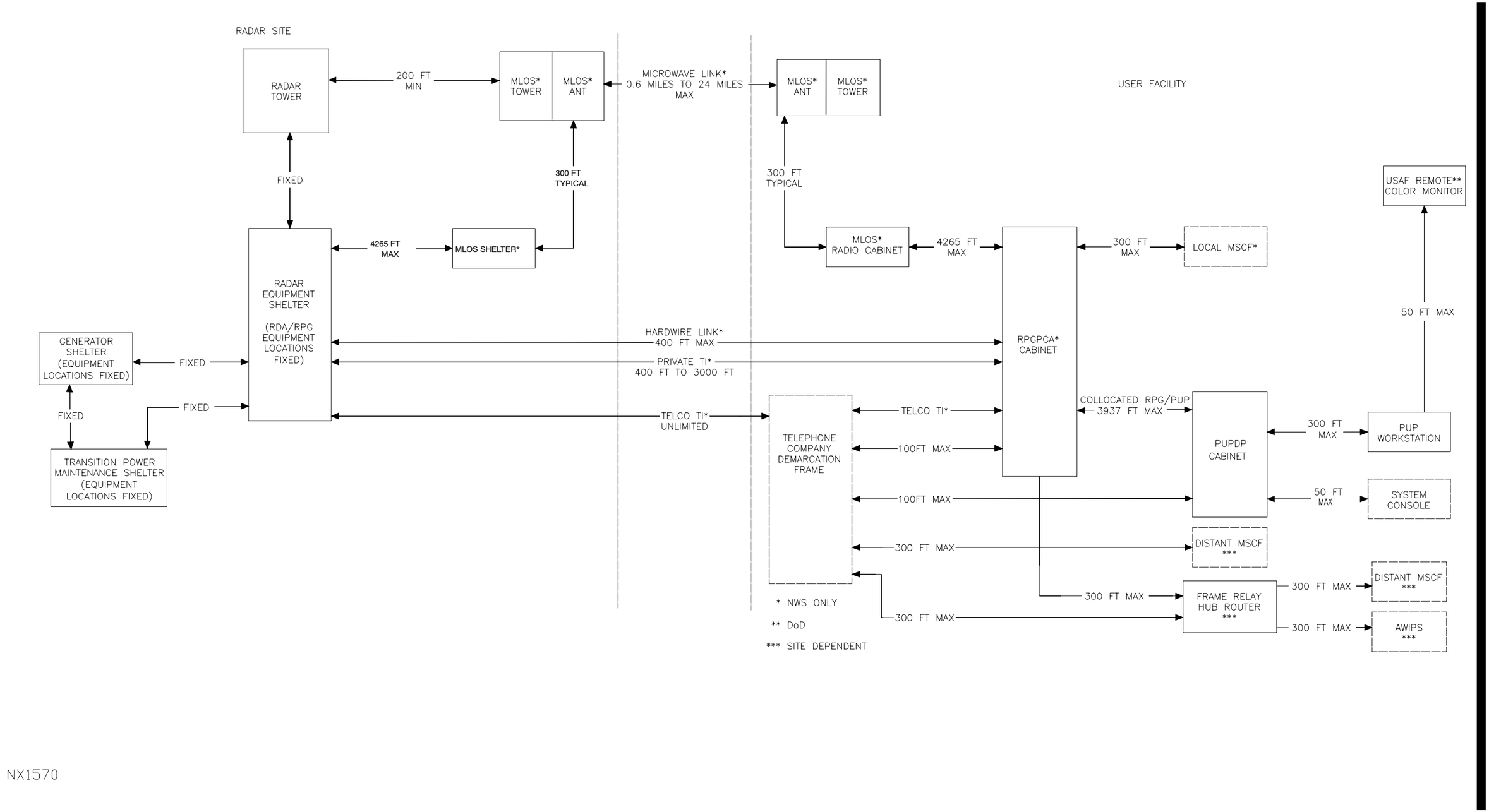

Figure FO1–4. Maximum/Minimum Equipment Separation Distances (Cable Lengths), Block Diagram

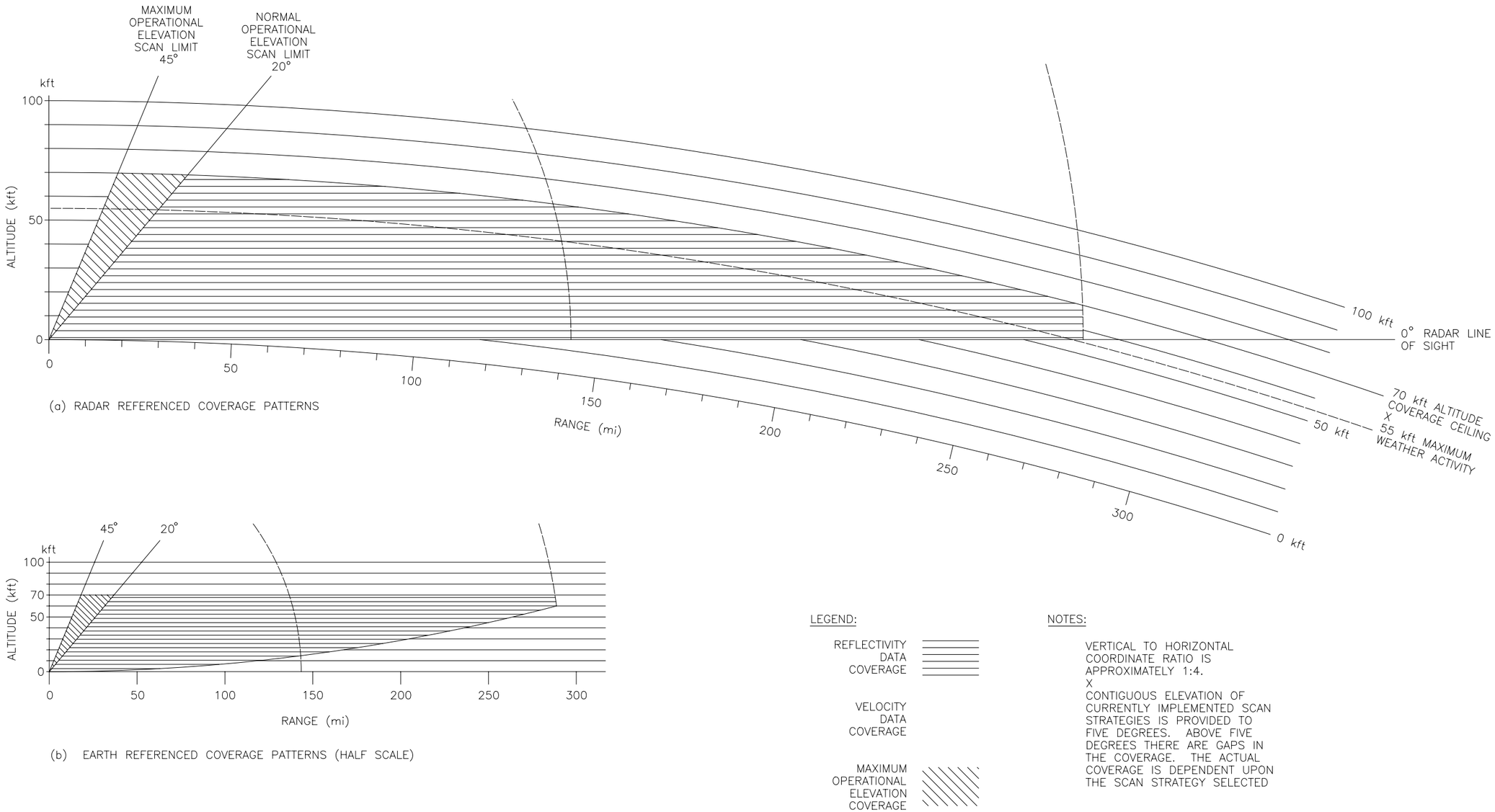

NX1522

Figure FO1–5. WSR–88D Altitude Coverage versus Range

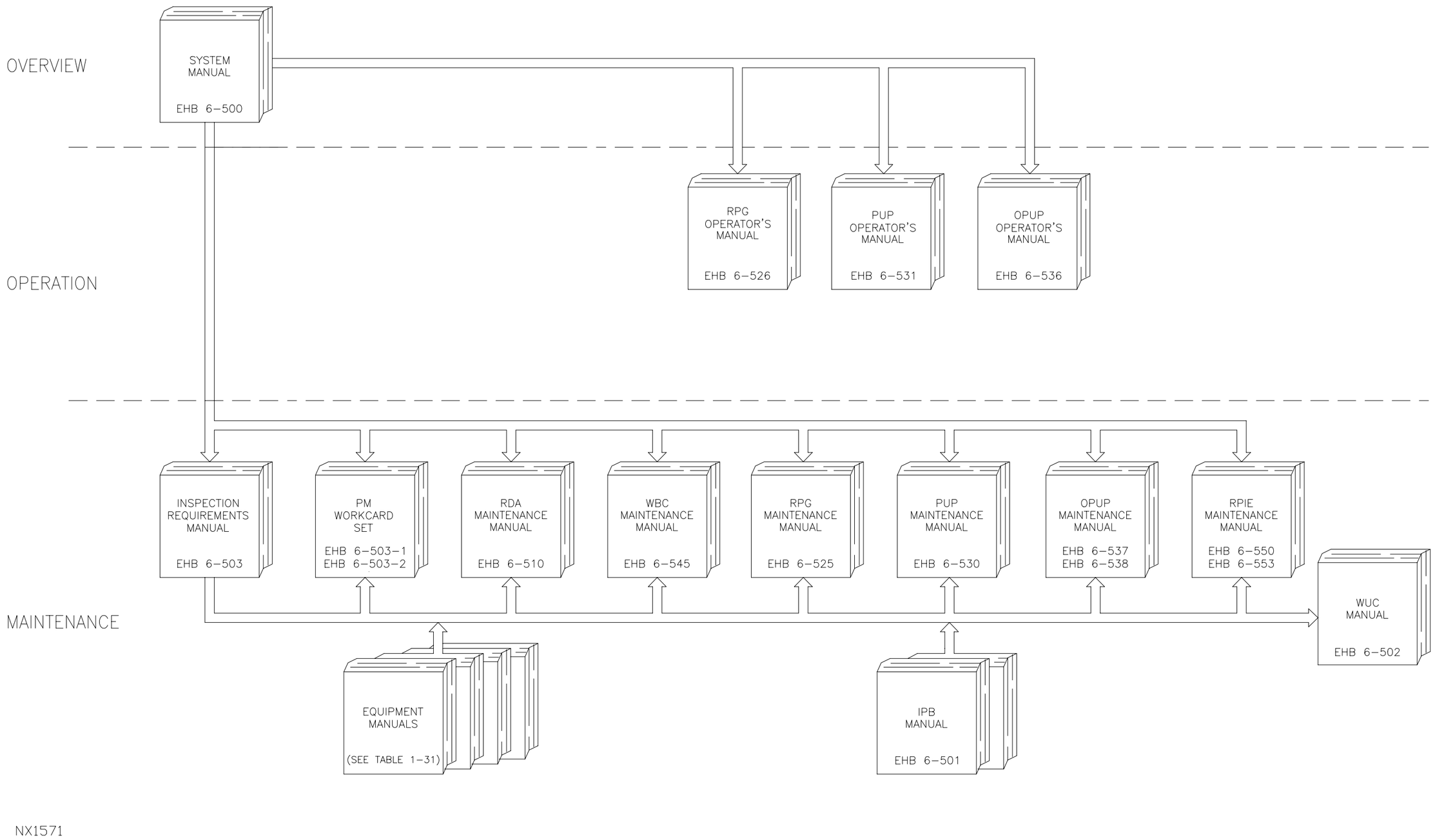

Figure FO1–6. Technical Manual Family Tree

CHAPTER 2

NOT APPLICABLE TO THIS MANUAL

CHAPTER 3

THEORY OF OPERATION

This chapter describes the functional operation of the WSR–88D. It is subdivided into five sections:

- Section 3–1, Functional System Overview. This section provides an overview of the functional operation of the WSR–88D system.
- Section 3–2, Functional System Operation. This section discusses the equipment operations that constitute the system functions and the flow of interface signals.
- Section 3–3, Functional Program Operation. This section provides an overview of the system data processing functions.
- Section 3–4, Functional Operation of Electronic Circuits. This section is intended for second–level functional description of electronic circuits. Second–level functional description is contained in the equipment group technical manuals.
- Section 3–5, Functional Operation of Mechanical Assemblies. This section is intended for second–level functional description of mechanical assemblies. Second–level functional description is contained in the equipment group technical manuals.

NOTE

This chapter and its corresponding sections refer to the RPGPCA as UD70 (previously referred to as the Processor Cabinet {UD21} and Communications Cabinet {UD22}). Unless otherwise specified for FAA redundant systems this information also applies to RPGPCA UD170.

Section 3−1. Functional System Overview

3−1.1 INTRODUCTION.

This section provides an overview of the functional operation of the WSR−88D system. The discussion is presented in terms of the functions performed by each of the six equipment groups comprising the system. These descriptions are supported by simplified functional block diagrams, which indicate the relationship between functions and provide some insight about the equipment involved in implementing these functions. This section is designed to support the nontechnical operator and provide the technician with an introduction to system functional operation. Paragraphs 3−1.2 through 3−1.7 discuss the functioning of the RDA, WBC, RPG, MSCF, PUP, and RPIE in terms of a nonredundant system. Paragraph 3−1.8 discusses the redundant system configuration.

3−1.2 RADAR DATA ACQUISITION GROUP.

The following paragraphs provide information on the functional operation of the RDA.

3−1.2.1 RDA. The RDA group is the sensor element of the WSR−88D system. It is comprised of the steel tower structure, which supports the radome−enclosed parabolic−dish antenna, a diesel generator shelter, and an electrical equipment shelter which houses the radar equipment. The RDA group functions as a stand−alone, remotely located facility which operates under the control of the RPG commands issued at the MSCF. The RDA commands are transmitted to the RDA via the RDA/RPG wideband data link. The wideband link also provides the path for RDA−generated base data and status information to be sent to the RPG. The RDA has a local control capability which is used by the radar technician during local site troubleshooting and maintenance activities. This capability is provided by means of the RDA maintenance terminal located in the RDA control cabinet (UD5) and by built−in maintenance panels in the RDADP and transmitter cabinet (UD3). The RDA generates and radiates radio frequency (RF) pulses to scan an atmospheric volume. It then acquires and processes reflected RF signals to obtain weather radar base data (consisting of measurements of reflectivity, mean radial velocity, and velocity spectrum width) which are sent to the RPG. The operation of the RDA can be divided into eight (8) functions which are shown in Figure FO3−1 and briefly described in paragraphs 3−1.2.1.1 through 3−1.2.1.8.

3−1.2.1.1 Transmitting Function. The transmitting function consists of the radar transmitter and waveguide components associated with the shelter, tower, and antenna pedestal.

3−1.2.1.1.1 Radar Transmitter. The radar transmitter (UD3) is a pulsed high−power microwave amplifier which receives externally generated RF drive excitation, synchronization, and control signals. The transmitter input is a gated low−power RF drive signal with a frequency between 2.7 and 3 GHz, which is generated in the receiver function. The output of the transmitter is a burst of high−power RF energy from 1.57 to 4.71 µs in duration, occurring at a PRF of from 321 to 1304 Hertz (Hz), and with a peak power of approximately 750 kW. Control of the transmitter is provided by timing signals from the signal processor function. These signals determine the pulse width and PRF of the transmitter. The transmitter also sends mode and fault status data to the RDASC computer via the data acquisition interface.

3−1.2.1.1.2 Waveguide. The waveguide components filter, control, and route the transmitter high−power RF via rotary joints to the antenna. Upon command, the high−power RF can be

rerouted from the transmitter into a dummy load for testing and maintenance. The microwave component also provides monitor points used to sample forward/reverse power.

3–1.2.1.2 Antenna Function. The antenna uses a specially designed feed horn to develop linear polarized RF energy and directs it toward a parabolic reflector. The reflector focuses the incident energy into an approximate one–degree (0.95°) pencil beam which is radiated into space. The linear polarized RF echo return is focused back into the feed horn when it hits the reflector. The feed horn is designed to receive this type of polarization. All other polarization types are attenuated or totally rejected. This technique increases the sensitivity of the radar to the meteorological effects and reduces the sensitivity to discrete airborne targets such as aircraft and birds. The RF return is routed out of the feed horn to the circulator/isolator. The circulator/isolator duplexes the transmitted and received RF energy, and directs the RF return to the receiver front end.

3–1.2.1.3 Antenna Positioning Function. The direction of the antenna's axis, and thus of the radar beam, is controlled by the antenna positioning function. This function, consisting of the pedestal assembly, the pedestal digital control unit, and the pedestal power amplifier, is a microprocessor controlled servo system. Control and power amplification circuits located in UD5 receive elevation and azimuth rate data from the RDASC processor via an RS–232 link. This data is converted to drive signals that are sent to elevation and azimuth drive motors in the antenna pedestal (UD2). These motors serve to move the pedestal (and thereby the antenna) in both axes. The maximum angular velocity in either axis is 35°/sec and the maximum angular travel of the antenna is –1° + 60° in elevation and continuous rotation in azimuth. Also located in the antenna pedestal are angular position and velocity sensors used to close the position, rate, and acceleration loops of the servo. The antenna positioning function also contains a network of fault and status sensors. The output of these sensors along with rate and velocity data are multiplexed through the RS–232 serial link to the RDASC processor for evaluation.

3–1.2.1.4 Receiver Function. The antenna collects the RF echo returns and feeds them to the receiver front end contained in the pedestal assembly. The receiver front end protects the radar receiver during pulse transmission and amplifies the RF echoes during reception. The radar receiver processes the signal from the receiver front end to extract video signal components, and optionally, to determine if interference is present. The radar receiver (UD4), contains all of the modules and circuitry necessary for the detection and conversion of the returned RF energy into a complex, phase–coherent analog (video) signal. This In–Phase (I) and Quadrature (Q – 90° shifted) video contains the echo return amplitude and phase information needed for base data generation. Along with the I and Q video, a log video signal is developed in the receiver. Log video provides a wide dynamic range automatic gain control (AGC) function, which is used to support the interference detection function. The I and Q video is converted to digital data and sent to the signal processor function where it is purged of ground clutter, and converted to radial base data. The receiver function also sends samples of signals (in digital format) from various internal monitor points to the signal processor function for calibration and performance monitoring and fault localization (PMFL). The receiver also provides the transmitter RF excitation drive signal, along with the stable local oscillator (STALO) and coherent oscillator (COHO) detection reference signals. An Archive I unit may be connected to the receiver to record analog video signals.

3–1.2.1.5 Signal Processing Function. The signal processing function is comprised of two module racks housed in the RDADP cabinet (UD5). These are the hardwired signal processor (HSP) and the programmable signal processor (PSP).

3–1.2.1.5.1 Hardwired Signal Processor. The HSP provides video signal, clutter filtering, and system synchronization. Although the HSP stores clutter–map data for a complete radial, the HSP processes and outputs the time–series echo data on a (range) cell–by–cell basis.

3–1.2.1.5.2 Programmable Signal Processor. The PSP processes time–series digital data from the HSP and develops the echo power, reflectivity, velocity, and spectrum width arrays. These arrays are sent to the RDASC processor where data base formatting is performed. Strong point clutter censoring and range unfolding are also performed in the PSP. The PSP uses the first half–cut surveillance echo power array (which is stored in the RDASC) from the previous scan and subsequently returned to the PSP to perform the unfolding process. Upon system initialization, the PSP receives a download command to download its own read only memory (ROM) to its random access memory (RAM). The microcode provides the detailed instructions for all array processing routines. The PSP also receives a macrocode command instruction set which is used to control waveform processing mode selection, including synchronization and timing command sequences. The command macrocode is downloaded for each radial and is stored in the RAM. The PSP also receives clutter map data on a radial–by–radial basis, which it sends to the HSP for clutter suppression processing. The PSP uses the signal samples from various internal monitoring points within the receiver and calculates parameters needed for receiver calibration. In addition, the signal processor uses this data for PMFL. Another primary function of the signal processor is to provide synchronization to the transmitter, receiver, and for the signal processing function itself. This is accomplished using control data from the RDASC processor and timing signals from the master clock located in the receiver.

3–1.2.1.6 RDASC Processing Function. The RDASC processing function consists of the RDASC processor and data storage assembly. This function receives scan pattern control data from the RPG, controls the antenna positioning, performs signal processing, and controls status and command interface functions. It assesses the performance of the RDA and formats the base weather data for transmission to the RPG. A maintenance terminal is provided for RDA initialization or test. An Archive II unit may be connected to the RDASC processor to record base products. The RDASC processor is the nerve center of the RDA. It is a mini computer which operates under the executive control of the OS/32 operating system. It runs the RDASC application program, computer program configuration item (CPCI) 01, during normal operation and the RDA diagnostic program, CPCI 06, during off–line system operability testing (SOT). In redundant systems, the RDASC processor also communicates with the RDASC processor of the dual channel through an interprocessor link and a servo and data acquisition unit (DAU) link.

3–1.2.1.6.1 RDASC Application Program Functions – CPCI 01. The RDASC application program, CPCI 01, is composed of seven distinct modules, or functions, which collectively provide the total RDASC processing capability. The seven CPCI 01 functions are described in the following paragraphs.

3–1.2.1.6.1.1 Function 1, Handle Maintenance Console. The handle maintenance console function provides the operator–machine interface between the program and the RDA maintenance operator. Maintenance operator communication to the program is primarily through the alphanumeric keyboard and display (RDA maintenance terminal), although provision is also included for switch/lamp inputs and outputs. The tower/utilities and transmitter data interface are provided through the data acquisition unit (DAU).

3–1.2.1.6.1.2 Function 2, Monitor RDA Hardware. The monitor RDA hardware function assembles status and performance data from each area of the RDA. The data may be direct sensor outputs or derived from other program functions, such as dynamic response of the control pedestal. The function determines the ordering and sequence of calibration, status, and performance–monitoring tests, particularly those which cannot be performed simultaneously with normal radar data gathering activities. The function also calculates required calibration parameters, issues status messages and alarms, and initiates their transmission to the maintenance terminal and RPG.

3–1.2.1.6.1.3 Function 3, Form RDA Data. The form RDA data function associates meteorological base data (reflectivity, mean radial velocity, and spectrum width along with quality status flags) with header information, which includes time, azimuth, elevation, and calibration parameters (at least one per elevation cut). It also prepares other RDA output data for transmission over the wideband data links, and generates the parameter blocks used by the handle wideband data function.

3–1.2.1.6.1.4 Function 4, Handle Wideband Data. The handle wideband data function controls the wideband interface to the RPG, the optional wideband data link to a user, and the optional Level II Archiving. It also monitors the status of the wideband data links, passing this information to the monitor RDA hardware function and passes on requests for special interface tests to the wideband link hardware. The data transmitted to the RPG includes base data with headers, summary RDA status data, RDA status alarms, detailed RDA calibration, performance, and status information (maintenance data) either upon request or as scheduled through adaptation data. Data transmitted over the wideband data link to the user includes base data with headers, and summary status. Maintenance data is not normally transmitted over this link. Data transferred to Level II Archiving includes base data with headers, RDA status data, and metadata (such as calibration data, clutter maps, etc.) Data input to the RDA from the RPG includes mode and RDA function commands, volume scan program data, clutter map and clutter suppression control data, and maintenance and RDA status requests.

3–1.2.1.6.1.5 Function 5, Control RDA. The control RDA function provides RDA mode control, provides configuration and status control, and coordinates the operations of the other RDASC program functions, providing the coarse timing of the RDA. (The fine grain timing is provided by the synchronizer function of the signal processor function under the control of the RDASC program). This function sets the RDA mode based on inputs from the RDADP and/or RPG, enables and disables base data transmission over the wideband data links, and specifies data to be Level II Archived and RDA configuration. It includes the startup, restart and shutdown sequences, and power loss and recovery sequences. At a lower level of control, this function coordinates RDA operations, sequences the volume scan pattern, directs the pedestal angle control, specifies signal processing control and waveform parameters, and interleaves calibration and performance monitoring checks during elevation transitions.

3–1.2.1.6.1.6 Function 6, Control Signal Processor. The control signal processor function generates and assembles the control commands, parameters and data required for proper functioning of the components of the signal processor function (the PSP and HSP) and the receiver. It services the interface between the RDASC processor and the signal processor function, initiates output of the above control data and initiates input of base, built–in–test (BIT), calibration and test data from the components serviced by this interface.

3−1.2.1.6.1.7 Function 7, Control Pedestal. The control pedestal function provides the immediate control of the pedestal and services the input/output (I/O) interface to the antenna/pedestal. The pedestal is controlled and monitored, and the resulting status information is passed to the control RDA function. The dynamic performance of the pedestal angle loops is monitored and the results are passed to the monitor RDA hardware function. The built−in−test equipment (BITE) flag and sensor data is passed to the monitor RDA hardware functions.

3−1.2.1.6.2 RDA System Operability Test (RDASOT) Functions − CPCI 06. The RDASOT program, which is used for off−line maintenance, diagnostic testing, and clutter bypass map generation, consists of the following eleven independent modules or functions.

3−1.2.1.6.2.1 Function 1, SOT Control. SOT control is responsible for the overall control of the SOT CPCI. This function processes the selection of tests and other functions, controls the execution of each test, and provides a common man−machine interface.

3−1.2.1.6.2.2 Function 2, Transmitter Diagnostic. The transmitter diagnostic is responsible for isolating failures within the transmitter. Upon detection of an error, the diagnostic informs the operator of the failing line replaceable unit (LRU) or the group of not more than 3 LRUs responsible for the failure. The transmitter diagnostic incorporates extensive use of BITE status.

3−1.2.1.6.2.3 Function 3, Tower/Utility Diagnostic. The tower/utility diagnostic is responsible for isolating failures within the environmental control system, auxiliary power generator and power distribution systems, and site security system. Upon detection of an error, the diagnostic informs the operator of the failing LRU or group of LRUs that are responsible for the failure. The tower/utility diagnostic incorporates extensive use of BITE status.

3−1.2.1.6.2.4 Function 4, DAU Diagnostics. The DAU diagnostic is responsible for isolating failures within the DAU. The diagnostic informs the operator of the failing LRU or group of LRUs responsible for the failures.

3−1.2.1.6.2.5 Function 5, Pedestal Diagnostic. The pedestal diagnostic is responsible for isolating failures within the pedestal. The diagnostic incorporates sensory information from the DAU and the pedestal, and uses BITs residing in the pedestal for the isolation of failures. Upon detection of an error, the diagnostic informs the operator of the failing LRU or group of LRUs responsible for the failures.

3−1.2.1.6.2.6 Function 6, Receiver Diagnostic. The receiver diagnostic is responsible for isolating failures within the receiver, RF/IF monitoring and test source selects. Fault isolation is performed by injection of a test signal and the monitoring of the test signal through the receiver. Upon detection of an error, the diagnostic informs the operator of the failing LRU of group of LRUs responsible for the failure.

3−1.2.1.6.2.7 Function 7, PSP Diagnostic. The PSP diagnostic is responsible for isolating failures within the PSP. This includes all LRUs from the input signal condition to the input/output controller (IOC). Fault isolation is performed through end−to−end tests. Predefined data is injected at the front end and the resultant data patterns received from the PSP are inspected. Failing LRUs are determined through error patterns in the data. Upon detection of an error, the diagnostic informs the operator of the failing LRU or group of LRUs responsible for the failure.

3–1.2.1.6.2.8 Function 8, HSP Diagnostic. The HSP diagnostic is responsible for isolating failures in the analog–to–digital (A/D) converter, prescaler, clutter filters, and combiner. Fault isolation is performed by injection of a test signal and the monitoring of the test signal at various points within the HSP. Upon detection of an error, the diagnostic informs the operator of the LRU or group of LRUs responsible for failure.

3–1.2.1.6.2.9 Function 9, Complex Spectrum Measurement. The complex spectrum measurement displays in tabular form the log amplitude and phase for each spectral line of a known test target. The complex spectrum measurement is a systems confidence test and not a diagnostic. Interpretation of the output data is required to determine the operability of the system. No LRUs are specified as possible causes of a failure.

3–1.2.1.6.2.10 Function 10, Clutter Bypass Map Generation. The clutter bypass map function of the RDASOT is responsible for the generation of the site dependent clutter filter bypass map. The clutter filter bypass map is used by the operational program. The generation of the map is automatic. This is not a diagnostic and no LRUs are specified if a failure occurs.

3–1.2.1.6.2.11 Function 11, Sun Source Checks. The sun source checks test uses the sun as a test source and performs checks on the antenna and radome performance and the pedestal alignment (to true north). Results from those checks must be interpreted to determine the operability of the system. No LRUs are specified as possible causes of a failure.

3–1.2.1.7 RDASOT for Redundant Configurations. For FAA or NWS redundant configurations, RDASOT runs in one of two modes: full mode or limited mode. In full mode, all software functions are enabled. In limited mode, all software functions requiring use of the antenna/pedestal are inhibited. For a channel to run RDASOT in full mode, one of the following conditions must exist:

a. Neither CPCI–01 nor CPCI–06 is running in the other channel.

b. If CPCI–06 is running in the other channel, it must be running under limited mode.

c. If CPCI–01 is running in the other channel, it must be in local control with an operating state of standby, off–line operate, or playback.

In limited mode, the following functions are inhibited:

a. Transmitter diagnostic subtests that perform waveguide switch check for Channel 2 and peak power measurements

b. Pedestal diagnostics

c. Complex spectrum measurement subtests that perform pedestal positioning and radar data measurement for input data

d. Generate clutter map

e. Sun source checks

f. RDA control subfunctions that control the pedestal and radar data

3–1.2.1.8 Status and Command Interface Function. The status and command interface function is provided by the DAU. The DAU, located in UD5, is a two–way communication link with the RDASC processor. It gathers fault alarms and status data from the transmitter, the antenna positioning electronics, the system microwave, the receiver, the RDA environmental sensors, and RDA utilities. The data may be in one of the following three forms:

- Analog
- Parallel binary words
- Discrete status bits

All this data is multiplexed together and sent via an RS–232 serial link to the RDASC. The RDASC also sends serial data to the DAU. This serial data contains mode commands for the antenna positioning electronics, the transmitter, and the auxiliary power generation system. For FAA sites only, the remote monitoring system (RMS) will monitor the Versa Module Eurocard (VME) power supplies.

3–1.2.1.9 VMEbus Interface Function. The Versa Module Eurocard bus (VMEbus) interface function enables the RDASC processing function to interface with the RPG via the wideband communication group. The VMEbus system is an industry–standard, hardware–based interfacing system. It implements link–level protocols and controls the transfer of data, thereby lessening the burden on the processor, which would otherwise perform these tasks. The function contains a VMEbus to Concurrent I/O bus interface, which directly interfaces the memory of the RDASC processor with a wideband interface via the processor's multiplexer (MUX) and direct memory access (DMA) buses. The wideband interface frames and formats base data and RDA status signals for transmission to the RPG via the wideband communication. It also receives RDA control signals from the RPG.

3–1.3 WIDEBAND COMMUNICATION GROUP.

The following paragraphs provide information in the functional operation of the WBC.

3–1.3.1 Wideband Communications Link. The wideband communications link transfers elevation slices of base data and status information from the RDA to the RPG. It also transfers commands from the RPG to the RDA. It supports the synchronous bi–directional, full duplex communication of data between two physically separate functional areas of the WSR–88D. The equipment can be configured to support both intra–WSR–88D communications between the RDA and RPG functional areas and communications to an external user by serving as a wideband interface. The wideband communication link includes a VMEbus system at the RDA. The VMEbus system enables direct memory access (DMA) into the RDASC processor. The VMEbus system includes a wideband interface, which formats the high–level data link (HDLC) data for transmission over a data link between the RDA and the RPG.

At the RPG, T1 wideband data enters from the RDA (reference WBC group, NWS EHB 6–545). An RDA/RPG gateway at the RPG converts the data from the T1 DSX–1 analog format to high speed serial RS–530 digital data, which is then converted into TCP/IP protocol. The RDA wideband data (now TCP/IP) is then fed through the LAN switch to the RPG processor. There is a direct

TCP/IP link between the LAN switch and the RDA/RPG gateway; however, it is just used for control and monitoring and not for actual wideband data transfer.

The data link may be configured in one of four configurations which are related to the distances between the RDA and RPG:

- Hardwired cable is used when distances are less than 400 ft.
- Private T1 links are used when distances are less than 3000 ft. (6000 ft. with lower loss cables and surge suppressors)
- Telephone company (TELCO) leased T1 service is used when the service is available and service costs do not prohibit it. The distance is unlimited.
- MLOS transmission is used for distances up to 25 miles (where T1 telephone service is not available). Distance may be extended by using repeaters.

The WBC functions are shown in Figure FO3–1 and are discussed in paragraphs 3–1.3.2 through 3–1.3.6.

3–1.3.2 Hardwired WBC Function. The hardwired WBC function consists of two pairs of serial digital input/output wires which are used to interconnect the RDA and RPG data processors wideband interfaces when the RPG is collocated with the RDA in the radar equipment shelter or when the RPG is located in a user facility less than 400 ft. from the radar equipment shelter. These I/O cables are also used to connect the RDA and RPG data processors to the microwave line–of–sight (MLOS) radio.

3–1.3.3 Private T1 Link. Twisted–pair cable provides the channel between the RPG and the RDA for the private T1 link. A CSU at the RDA and a CSU at the RPG are used to connect the wideband interfaces of both the RDA and the RPG to the twisted–pair cable. The twisted–pair cable is owned and maintained by the site.

3–1.3.4 TELCO T1 Link. The TELCO's lines provide the channel between the RPG and the RDA for the TELCO T1 link. A CSU and demarcation frame are used at the RDA. A CSU and demarcation frame are used at the RPG end to connect the respective wideband interface to the telephone company line.

3–1.3.5 RDA MLOS WBC Function. The RDA MLOS WBC function provides the RDA end of the MLOS communications link. It consists of the MLOS radio cabinet and antennas. The MLOS function is configured in either of two basic variations: nondiversity and space diversity. In a nondiversity configuration, the MLOS radio modulator/transmitter sections convert the digital data signals from the RDASC wideband interface into microwave signals. These are beamed via an antenna to another MLOS system located at the RPG site. Signals from the RPG are received via the antenna, converted to digital signals in the receiver/demodulator sections, and routed to the RDASC wideband interface.

3–1.3.6 RPG MLOS WBC Function. The RPG MLOS WBC function is identical to that of the RDA MLOS WBC function, except that it contains a minimaster unit that polls remote station units in the RPG and RDA for the status of the MLOS radio and MLOS shelter. The minimaster sends this status data to the RPG product generation processor via a narrowband telephone link.

3–1.4 RPG GROUP.

The RPG group receives base data from the RDA and processes it into weather products. It also supports the storage and distribution of products. It provides the computational storage and data entry resources necessary to support both product generation and diagnostic software. The RPG receives base data via the wideband link and sends products to the principal users via numerous narrowband links (and one LAN interface to AWIPS in the NWS RPG group only). The operation of the RPG is divided into four (4) functions that are shown in Figure FO3–1 and are discussed in paragraphs 3–1.4.1 through 3–1.4.4.

3–1.4.1 RPG Data Processing Function. The RPG data processing function consists of the product generation processor and an archive storage device for Archive III requirements. The archive storage device for Archive III permits up to ≈450 hours of full–load products to be recorded. The product generation processor is controlled via the MSCF. Requests for meteorological products from the principal users are received via the communications function. The requested data is returned via the users' communications links.

3–1.4.1.1 RPG Product Generation Processor. The product generation processor receives base data from the RDA, processes the base data into derived products, stores the products in mass storage, and transmits the products to all users as required. The processor accepts and stores RDA status and error messages, notifies the currently connected principal users of any status changes of the RDA or RPG, provides an RPG test mode during startup and an RPG restart after a momentary operation interrupt, and controls the RDA in remote operation. In addition to the Unix operating system, the RPG processor runs the RPG program (CPCI 03). This program is described in the following paragraphs.

3–1.4.1.1.1 RPG Processor Application Program – CPCI 03. The RPG application program CPCI 03 provides the following five (5) functions:

3–1.4.1.1.1.1 RPG Program Function 1, Acquired Radar Data. This function interfaces with the RDA via a bidirectional wideband link to receive base data and to transmit RDA control information. In addition, it provides for the distribution of base data to optional base data users.

3–1.4.1.1.1.2 RPG Program Function 3, Generate Products. This function converts base data into meteorological products consisting of base, derived, and alphanumeric products. The generate products function performs velocity dealiasing and transforms base data into the following types of products in response to requests from users or the RPG operator.

3–1.4.1.1.1.2.1 Base Products. Base products are direct representations of the base data which have been reduced either in range or resolution. These products include the following:

- Reflectivity
- Velocity
- Spectrum width

3–1.4.1.1.1.2.2 Derived Products. Derived products are produced from algorithm outputs, window extractions of the base data, compositing of the base data, or some combination of the above. These

products can be found in Table 1–11. Algorithms are run on base data in order to produce some of the derived products. These algorithms include:

- Storm segments
- Storm centroids
- Storm tracking
- Storm position forecast
- Storm structure
- Hail
- Vertically integrated liquid
- Echo tops
- Severe weather probability
- Precipitation detection
- Precipitation preprocessing
- Precipitation rate
- Precipitation accumulation
- Precipitation adjustment
- Precipitation products
- Velocity azimuth display
- Combined shear
- Mesocyclone detection
- Tornado vortex signature

3–1.4.1.1.1.2.3 Alphanumeric Products. Alphanumeric products, like derived products, are produced from algorithm products, alert procedures, and MSCF inputs. The alphanumeric products are listed in Table 1–11.

3–1.4.1.1.1.3 RPG Program Function 4, Stand–alone Distribute Products. The stand–alone distribute products function provides for the on–line storage, distribution, and archiving of product data. Product data is stored upon availability and also according to control by adaptation data.

Product data is distributed to different types of users in suitable formats.

There are two broad categories of principal product users –– associated and non–associated. Associated users have full–time dedicated access to the RPG. Non–associated users have

on–demand access to the RPG. The three types of associated users are more commonly referred to by their user class definition. The main associated user is Class 1, but there are two additional supersets of Class 1 user referred to as RPGOP 50 (Class 99) and RPGOP 90 (Class 98). The three classes of associated users vary by the type of communications technology used to access the RPG and the number of products that may be routinely requested. Table 3–1 provides a comparison of the allowed routine product list (RPS) list sizes and typical communications technology for the three different associated user classes. The Class 1 and superset Classes 98/99 interface procedures and format are defined by WSR–88D Interface Control Documents (ICDs).

Table 3–1. Associated User Class Capabilities

User Class Capabilities	RPG Associated User Classes		
	1	RPGOP 50	RPGOP 90
Principal User	X	X	X
Up to 31 Products on RPS List	X		
Up to 50 Products on RPS List		X	
Up to 90 Products on RPS List			X
14.4 Kbps or 33.6 Kbps Narrowband Link	X		
56 Kbps Co–located Serial Link		X	
10 Mbps Ethernet LAN Connection			X

Non–associated users are defined as WSR–88D Class 2 users. They have dial on–demand access via 14.4 Kbps narrowband links.

The RPG supports numerous principal user system connections. Several example user systems and their category and class capabilities are summarized in Table 3–2 below.

Table 3–2. RPG Class Capabilities of Several Principal User Systems

Principal User Systems	Class Capabilities			
	2	1	RPGOP 50	RPGOP 90
PUP	X	X		
RPGOP	X		X	
NWS AWIPS	X	X	X	X
FAA ITWS		X		
MIAWS		X		
DoD OPUP	X	X		
FAA OSD		X		
FAA WARP		X		

3–1.4.1.1.1.4 RPG Program Function 5, Stand–Alone Control System. The stand–alone control system is comprised of five subfunctions which are described in the following paragraphs.

3–1.4.1.1.1.4.1 Manage MSCF. The manage MSCF subfunction provides all of the man–machine interface functions that are available to the operator at the MSCF.

3–1.4.1.1.1.4.2 Common Modules. The common modules subfunction consists of subroutines required in multiple computer program components (CPCs). Such subroutines exist as a library of modules that are included with the user CPCs when the task images are created.

3–1.4.1.1.1.4.3 Monitor Status/Performance. The monitor status/performance subroutine provides the on–line performance monitoring of the RPG system. It also provides the status monitoring of the RDA system, the associated users, and each communication interface.

3–1.4.1.1.1.4.4 Coordinate Tasks. The coordinate tasks subroutine is responsible for controlling the execution of all tasks involved in the processing of radar data with the specified algorithms to produce specified products. This includes the interprocessor communications necessary to coordinate the RPG activities among the processors of the RPG computer system.

3–1.4.1.1.1.4.5 Manage Buffer Pools. The manage buffer pools subroutine facilitates the processing of radar data by providing a mechanism by which a shared pool of computer memory is used as a means of passing raw data, intermediate outputs and products between the various processing tasks without the need to actually move the data.

3–1.4.1.1.2 Processor Diagnostic Test Program Functions – CPCI 07. The processor diagnostic test program is an off–line, interactive program which provides diagnostic capabilities to support the maintenance/repair of the RPG processor and its associated communication interfaces to other units and devices of the WSR–88D system. CPCI 07 performs three primary functions:

- RPG function 1, interface with operator
- RPG function 2, validate operational integrity
- RPG function 3, localize fault

These functions are discussed in paragraphs 3–1.4.1.1.2.1 through 3–1.4.1.1.2.3.

3–1.4.1.1.2.1 RPG Function 1, Interface With Operator. The interface with operator function provides a user friendly man–machine interface between the RPG maintenance operator (also referred to as simply “operator”) and the other functions of the RPG HCI program. It receives operator data entered by the RPG maintenance operator and validates the operator command portion of the operator data. It formats the operator data and controls its transfer for processing by other program functions. The function also formats and controls the transfer of operator displays to the maintenance position for operator viewing. The operator displays include operator prompts for input, status message displays, and help displays.

3–1.4.1.1.2.2 RPG Function 2, Validate Operational Integrity. The validate operational integrity (VOI) function validates the operational integrity of the RPG equipment, or a subset of this equipment, after a repair action has been affected or prior to restarting the RPG unit.

3–1.4.1.1.2.3 RPG Function 3, Localize Fault. The localize fault function provides the control and detailed diagnostic tests required to localize failures within the RPG equipment supported by this CPCI to a fault group of three (3) or less LRUs.

3–1.4.1.2 Archive III Function. The Archive III function within the RPG processor receives and stores designated weather and derived products and transmits requested products to the processor for distribution. The RPGPCA has an archive storage device that can act as an Archive III unit and/or for creating backup copies of system software. The archive storage device is connected directly to the RPG processor in the RPGPCA. Currently, only the NWS has an Archive III requirement.

3–1.4.1.3 Local Area Network. The LAN function within the RPGPCA provides a TCP/IP based network over an Ethernet 10/100 BaseT "backbone" for the system. Most all RPGPCA components communicate with each other using the TCP/IP, and the LAN switch provides the central interconnectivity point for these devices. At some sites, the LAN switch is partitioned as two individual LAN backbones. One is for the RPGPCA components, and the other is for the local BDDS users.

3–1.4.2 Communications Interfaces. The RPG supports a number of communications interfaces. The RDA/RPG interface is for ingest of base data, to query/receive RDA status, and to control the RDA. The BDDS interface is to distribute base data to the BDDS processor for further base data user distribution. The principal user interfaces are for product requests from and distribution to the associated and non–associated users of the WSR–88D radar. The MSCF is the primary control and operation interface to the RPG. The MSCF may be local or distant and the RPG interface is different for each. All the above listed interfaces can be broadly categorized as either point–to–point, LAN, or WAN. A number of different underlying technologies and protocols are used in the interface to exchange data with the RPG. The communications interfaces are described in the following paragraphs.

3–1.4.2.1 Point–to–Point Communications Interfaces. The HDLC T1 wideband base data enters the RPGPCA through the RDA/RPG gateway. In the RPG, the gateway receives and then converts the HDLC T1 DSX–1 bit stream into TCP/IP over Ethernet format. The data is then fed to the RPG via the LAN switch for product generation and distribution.

After generation, products from the RPG processor are packaged for some principal users as TCP/IP to the communication server via the LAN switch. The communication servers perform protocol conversion of principal user data from TCP/IP into X.25/HDLC serial format. The user data is sent to the respective user's modem in the dedicated/dial modem rack assembly for distribution to the appropriate user.

3–1.4.2.2 LAN Communication Interfaces. In local BDDS configurations, the base data is sent from the RPGPCA to the BDDS processor via the RPG portion of the RPGPCA LAN switch. From the BDDS processor, the base data is transmitted to a virtual LAN (VLAN) partition on the LAN switch. The base data users are external to the RPGPCA cabinet and connect to the VLAN via the RPGPCA I/O panel.

For local MSCFs, the RPG control and operations data is sent from the RPGPCA processor to the RPGPCA router via the LAN switch backbone. The RPG router interface port for the local MSCF is also an Ethernet port. This connection bridges the MSCF processor on the RPG LAN.

After generation, products from the RPG processor are packaged for some principal users as TCP/IP datagrams to the router via the LAN switch. The router performs IP network address translation (NAT) to direct their user data to an external LAN via the respective RPG 10/100 BaseT LAN port.

3–1.4.2.3 WAN Communications Interfaces. After generation, products from the RPG processor are packaged for some principal users as TCP/IP datagrams to the router via the LAN switch. The router directs their user data to the respective RPG serial port. The serial ports encapsulate the TCP/IP datagrams using PPP frames. These frames are sent to the respective RPG modem in the dedicated/dial modem rack assembly for distribution to the appropriate user.

For distant MSCFs, the RPG control and operations data is sent from the RPGPCA processor to the RPGPCA router via the LAN switch backbone. The RPG router interface port for the distant MSCF is an asynchronous serial PPP port or a serial fractional T1 port, depending on whether frame relay service is used. If frame relay service is not used, the MSCF communications link is through the respective RPG modem in the dedicated/dial modem rack assembly for transmission to the distant MSCF. If frame relay service is used, the MSCF communication is through the respective RPG router in the RPGPCA to the distant frame relay hub router.

In remote BDDS configurations, the base data is first sent from the RPG LAN switch to the RPG router. From the router, the data is converted to T1 format and sent from a CSU/DSU port to the remote BDDS location. The connection bridges the BDDS processor to the RPG LAN. At the remote BDDS the data is received at a CSU/DSU port on the BDDS router and sent to the BDDS processor via the BDDS LAN switch. From the BDDS processor, the base data is transmitted to users connected on a virtual LAN (VLAN) partition on the BDDS LAN switch.

3–1.4.2.4 Narrowband Communications. The narrowband communications function consists of modem–based telephone links. The modems convert the communication server's serial data stream output into a trellis coded modulation (TCM) and/or quadrature amplitude modulation (QAM) audio tone for transmission over the telephone lines. The process is reversed upon reception. All modems are mounted in card racks in the RPGPCA cabinet.

The modems are associated with both leased (dedicated) and dial lines. The leased lines are generally used for associated users, whereas the dial lines are used for access by authorized non–associated users. The processor is interfaced to the narrowband links through the communication server. The narrowband communications provide weather products and derived products as permitted to the narrowband users. The RPG receives requests and status from associated users and transmits weather products, derived products, and RDA and RPG status to associated users.

At NWS sites, the RPG and NWS PUP or AWIPS are connected via RS–232/RS–422 converters.

3–1.4.3 Relay Box. The relay box is found with FAA redundant systems only. The relay box contains up to 60 relays that are used to switch narrowband communication lines from Channel 1 or Channel 2 to associated, non–associated, and other users. One contact of each relay is connected to a dial or leased narrowband line of Channel 1. A second contact of each relay is connected to a dial or leased narrowband line of Channel 2. The common contact of each relay is connected to the telephone company demarcation frame. The relays are energized by control signals output from the digital input/output (DIO) card of the product generation processor of each channel. The control signals are sent to relay drivers in the relay box.

3–1.4.4 Remote RDA Maintenance Terminal. Within NWS redundant systems, a remote RDA maintenance terminal provides the man–machine interface that allows the user to interact with the

RDA processor operating system, application and maintenance programs, and the control diagnostic system (CDS).

The remote RDA maintenance terminal connects to the Channel 1 RDA, UD105, through a dial line. The terminal contains a dial port modem and statistical multiplexor (STATMUX) to transmit/receive and multiplex/demultiplex the application– and system–port lines of both Channels 1 and 2. It also contains a dual A/B switch used to select which channel is connected to the remote RDA/RPG remote access terminal (RRRAT) UD32A10.

3–1.5 MSCF GROUP.

Paragraphs 3–1.5.1 through 3–1.5.1.4 provide information on the functional operation of the MSCF.

3–1.5.1 MSCF Function. The MSCF UD71 provides control for operation and monitoring of the RPG. It provides an operator interface necessary to carry out the control and status monitoring functions. It provides control over the processing functions by permitting the selection of products to be routinely generated and a product subset to be archived. It also provides the interface to access the operating system, initialize the RPG processor, and perform first level analysis of system malfunctions. Operational information about the application functionality/GUI interface for the MSCF can be found in NWS EHB 6–526 for operators, or NWS EHB 6–525 for maintenance technicians.

3–1.5.1.1 MSCF Monitor and Control Function. The MSCF also monitors the narrowband connection to the users and the RDA operability and status via messages from the RDA. The MSCF displays the status and error messages periodically, upon operator request, or upon a change in status within the WSR–88D system. It provides limited operator control of the RDA. The MSCF may be located with the RPG processor (locally) as with NWS systems, or at a distance from the RPG at the controlling user's facility, as with DoD and FAA systems.

3–1.5.1.2 MSCF Equipment. All MSCFs consist of a terminal suite made up of the MSCF processor (UD71A1), 21–inch monitor (UD71A2), keyboard (UD71A3), and mouse (UD71A4). MSCFs also include a backup storage device (UD71A6), a surge suppressor (UD71E1), and a color printer (UD79A1). A distant MSCF has either a dedicated–port modem (UD71A5) or a frame relay hub router (UD75A1).

The backup storage device (UD71A6) at the MSCF is used for software backups. All RPG application data (logs, status, and system information) can be ported to the MSCF for printing. The router (UD70A2) in the RPGPCA cabinet is connected to the serial interface of the power administrator (UD70A10) and this allows for an out–of–bandwidth serial link to the power administrator for performing power off/on resets.

3–1.5.1.3 Local MSCF Function. At NWS sites, the MSCF is located with the RPGPCA cabinet (within the same building), and it is referred to as a local MSCF. The local MSCF communicates to the LAN switch within the RPGPCA cabinet through a TCP/IP Ethernet connection via the router (UD70A2). The LAN switch allows access to almost all the RPGPCA components, including the RPG processor (UD70A7), to carry out control and status monitoring functions.

3–1.5.1.4 Distant MSCF Function. DoD and FAA sites have a distant MSCF, which means the RPGPCA is located with the RDA while the distant MSCF is located at a NWS Weather Forecast

Office, or in a few instances with the local DoD or FAA Weather Facility. A distant MSCF is connected to the RPGPCA via a communication link using either dedicated–port modems or frame relay circuit and a frame relay hub router . With FAA systems, the distant MSCF link is switched in the relay box, with connections to the RPG router in each channel.

For the DoD or FAA radars without frame relay service, the actual distant MSCF control and monitoring functionality is provided through the Cisco router (UD70A2) which is a multifunctional platform that combines dial access and router services. For DoD and FAA systems, the router provides remote access. It provides a link for the distant MSCF through use of a serial RS–232 port. The router provides for a protocol translation which is then fed to the dedicated–port modem. Thus, the distant MSCF provides an operator interface from which control and monitoring functions are carried out.

For the DoD or FAA radars with frame relay service, WAN communication interfaces support distant MSCF control and monitoring functionality.

3–1.6 PUP GROUP.

The PUP provides the meteorological operator the means to request weather products and control their display. It receives meteorological products status and other associated data from the RPG, formats them, and displays them in a form selected by the operator. The operation of the PUP can be divided into five functions:

- Narrowband (NB) communications function
- VMEbus interface function
- Display processing function
- Graphics processing function
- Normal/alternate PUP workstation function

These functions are shown in Figure FO3–1, Sheet 2 and are discussed in paragraphs 3–1.6.1 through 3–1.6.5.

3–1.6.1 Narrowband Communications Function. The narrowband communications function consists of full–duplex modem–based telephone links. The modems convert the frequency modulated audio tone from the telephone lines into digital data for the display processing function, and reverse the process for data transmission. The modems are associated with both leased (dedicated) and dial lines. The leased line is used to connect the PUP to its associated RPG. The dial lines allow external users to communicate with the PUP. One (or more) of the dial lines uses an auto call unit (ACU) internal to the dial modem which allows the display processing function to dial outgoing calls to non–associated RPGs and other users. The Codex 2264 and 3262 dial–port modems are each equipped with an internal ACU that enables the display processing function to dial outgoing calls to non–associated RPGs and other users. When the PUP is collocated with the RPG, a modem–based communication link is not used. Instead, the RPG and PUP communicate via an RS–232 link. The PUP communication provides NB communication ports for:

- Associated RPG (class 1 dedicated)
- Non−associated RPG (class 2 dial)
- Other users (class 4 dedicated)

The PUP receives requested weather and derived products and the RDA/RPG status from the RPG via its NB port. It receives messages and changes in RDA/RPG status automatically. The PUP sends status data and weather/derived products requests to the RPG. The PUP NB communication with a non−associated RPG provides the PUP with limited selection of weather/derived products. The other user NB communication port provides weather products from the PUP.

3−1.6.2 VMEbus Interface Function. The VMEbus interface function interfaces the narrowband communications function with the display processing function. This function is based on the industry−standard VMEbus. The PUP's display processor's memory is directly accessed by a narrowband interface through the VMEbus and the processor's MUX and DMA buses. The narrowband interface connects RS−232 ports to the VMEbus to enable transmission and reception of narrowband data to and from the RPG via the narrowband communications function.

3−1.6.3 Display Processing Function. The display processing function consists of the display processor and associated data storage assemblies. (The data storage assemblies contain an Archive IV function which permits the storage of up to 168 hours of display data.) Each is described in the following paragraphs.

3−1.6.3.1 Display Processor. The display processor receives requested products and RDA/RPG status from the RPG, via the narrowband communications function, formats them for display, and sends them to the graphics processing function. The display processor also monitors overall system status and transmits operator data requests and control commands to the RPG. Control of the display processor is exercised from the system console. A system terminal provides access to the display processor's operating system for monitoring processor operation or to perform maintenance diagnostics. The display processor stores, processes, and displays the products. It also edits, annotates, distributes, and archives designated products. It provides automatic restart after a power loss as well as PUP status monitoring of the graphic processor, communication link, RDA, RPG, and weather modes. It provides an alert alarm for selected weather parameters within designated areas. The display processor sends weather returns and derived products to the graphic processor for further display processing. In addition to the OS/32 operating system, the display processor runs CPCI 04. The product display program performs three (3) functions which are discussed in the following paragraphs.

3−1.6.3.1.1 Function 1, Interface With Operator/Trainee. The interface with operator/trainee function receives and interprets all operator entries and generates commands to the appropriate functions to control execution of the operator commands.

3−1.6.3.1.2 Function 2, Monitor System Performance. The monitor system performance function provides on−line performance monitoring of the RDA, RPG, and communications WSR−88D functions based on data received from the RPG. The function provides detailed on−line performance monitoring and fault localization functions for the operational position equipment.

3−1.6.3.1.3 Function 3, Process Weather Products. Process weather products performs four (4) basic subfunctions which are discussed in the following paragraphs.

3–1.6.3.1.3.1 Handle Communications. The handle communications subfunction supports the interface between the product display and the RPGs and other users via the serial communication lines.

3–1.6.3.1.3.2 Annotate Weather Products. The annotate weather products subfunction accepts operator inputted graphical and text information from the interface with operator/trainee function and creates weather product annotations and updates background maps.

3–1.6.3.1.3.3 Form Weather Products. The form weather products subfunction encompasses the major real–time display processing performed on weather products within the operational position. The processing speed is sufficient to keep up with the data received from the handle communication subfunction. The format conversion serves to provide compatibility between the graphics display formats used by the store/retrieve weather data subfunction and all formats used by the communication links.

3–1.6.3.1.3.4 Store/Retrieve Weather Data. The store/retrieve weather data subfunction manages the product files on the mass storage device and the archive device.

3–1.6.3.2 Data Storage Assemblies. The Archive IV function stores designated weather/derived products received from the display processor. It also sends requested archive data (products) to the display processor.

3–1.6.4 Graphics Processing Function. The graphics processing function converts product display data from the display processing function into video signals for display and recording at the PUP workstation. It also interfaces graphics control between the PUP workstation function and the display processor. These functions are performed by a graphics processor.

3–1.6.4.1 Graphics Processor. The graphics processor is a self–contained microprocessor dedicated to the generation of radar product video for display on the color graphics display monitor. It receives input data from the display processor and outputs video to the color monitors. The graphics processor also receives puck data from the graphic tablet in the PUP workstation. This data is transferred to the display processor. The purpose of the puck/tablet is to control the display and select weather products. The graphics processor also interfaces with the color graphics printer. The printer is used to make a hard copy of the color display at any time.

3–1.6.5 PUP Workstation Function. The PUP workstation is an operational position for the WSR–88D system. The workstation elements may be configured in the following two ways.

3–1.6.5.1 Normal PUP Workstation Function. The PUP workstation function provides the meteorological display and control capabilities for the system. It consists of a color graphics display assembly containing two color monitors upon which meteorological products are displayed. A color graphics printer can provide a hardcopy of a meteorological display. Selection and editing of the graphics displays is exercised from a graphics tablet. The monitors, line printer, and graphics tablet interface with the graphics processing function. An application terminal allows the operator to communicate with either the display processor or graphics processor. When connected to the display processor, the application terminal is menu driven to provide control of the application software. When connected to the graphics processor, the application terminal allows the operator to run diagnostics. Finally, the workstation contains an audible alarm which is driven by the display

processor to signal the occurrence of meteorological events. The audible alarm also sounds with the arrival of a free text message from the RPG.

3−1.6.5.2 PUP Workstation Extension Function. The PUP workstation extension includes the same operator−interface equipment as the normal workstation. It also includes additional communication hardware necessary because of its more remote location (beyond 100 ft.) from the workstation. An RGBS line driver/equalizer connects to each of the color monitors. A parallel line extender connects to the color graphics printer. Three limited distance modems facilitate communication to the graphics tablet and the application terminal.

3−1.7 RPIE GROUP.

The real property installed equipment (RPIE) provides the shelters (generator, radar equipment, radome, MLOS, and transition power maintenance shelter) and towers (radar and MLOS) that protect and support the functional equipment groups (RDA, WBC, and collocated RPG). The RPIE also includes auxiliary equipment which supports the operation of the prime equipment. The tasks performed by the auxiliary equipment can be divided into four functions. These four functions are as follows:

- Power distribution and lighting function
- Heating, ventilating, and air conditioning function
- Fire detection and suppression function
- Security and status monitoring function

The relation of these functions to the shelters and towers is shown in Figure FO3−2 and discussed in paragraphs 3−1.7.1 through 3−1.7.4.

3−1.7.1 Generator Shelter. The generator shelter houses the equipment that distributes commercial power, or provides backup power, to the radar site.

3−1.7.1.1 Power Distribution and Lighting Function. The application of utility power to the auto−transfer switch (ATS) varies depending on the agency (DoD, FAA, or NWS) and whether it is a single channel system or a redundant system. For single channel DoD and NWS sites, utility power is applied to the ATS via a 225 amp main disconnect switch (circuit breaker) UD10S1. For NWS redundant sites, utility power is applied to ATS via a 300 amp service disconnect switch mounted on a pole outside the generator shelter through a junction box (the former main disconnect switch UD10S1). For FAA redundant sites, utility power is applied to the ATS via a 400 amp main module disconnect switch. The ATS monitors the power and if there is a power interruption, or upon receipt of a remote command, it starts the site engine/generator (E/G) and switches over to generator power. During any transition from utility to generator power, the power to the critical load is supplied by the TPS batteries via the TPS for DoD and NWS sites, or from a rotary UPS at FAA sites. The output of the ATS is routed to two different paths, non−critical and critical as described below.

- At nonredundant systems sites with a TPMS Type 1, 2, or 4 Shelter, non−critical power from the auto−transfer switch is routed to the main power distribution panel

(UD7A2) in the radar equipment shelter to supply various site loads and the TPMS power distribution panel. The critical power feed from the auto–transfer switch is via the TPMS 200 amp fused disconnect (UD10TPS1) in the engine/generator shelter to the TPS. When the TPS is operating, power flows through the closed TPS input fused disconnect (UD61A5S1) to the TPS input. The TPS output is then routed through the closed TPS output fused disconnect (UD61A5S3) to the critical equipment contactor (UD7S6) in the RDA shelter to the secondary power panel (UD7A3). When the TPS is in the maintenance bypass mode, power flows from the TPMS fused disconnect (UD10TPS1) through the closed maintenance bypass fused disconnect (UD61A5S2) to the contactor and the TPS input and output fused disconnects would be open.

- At NWS redundant systems sites with a TPMS Type 3 shelter, power from the auto–transfer switch is routed to the main power distribution panel in the engine/generator shelter. From the main power distribution panel, a 100 amp circuit breaker (10TPS3CB1) feeds the TPMS power distribution panel and a 225 amp circuit breaker feeds the TPS. When the TPS is operating, power flows through the closed TPS input fused disconnect (UD61A5S1) to the TPS input. The TPS output is then routed through the closed TPS output fused disconnect (UD61A5S3) to power panel D (Medford, OR) or power panel C (Missoula, MT). Three 100 amp circuit breakers (7TPS2CB1, 2, and 3) in power panel C/D supply power via the associated critical equipment contactor (UD7S6, S36, and S37) to the associated secondary power panel (UD7A3, 7A29, and 7A30.) Additionally, power panel C/D supplies power to the CEC coil control via a 15 amp circuit breaker (7TPS2CB4). The TPS hydrogen detector is supplied 120V AC power from the TPS outlet power termination box via a 20 amp circuit breaker in a separate NEMA enclosure. When the TPS is in the maintenance bypass mode, power flows from the main power distribution panel 225 amp circuit breaker through the closed maintenance bypass fused disconnect (UD61A5S2) to power panel C/D and TPS input and output disconnects would be open.

- At nonredundant system sites with a TPMS Type 5, 6, or 9 shelter, non–critical power from the auto–transfer switch is routed to the main power distribution panel (UD7A2) in the radar equipment shelter to supply various site loads and the TPMS power distribution panel. The critical power feed from the auto–transfer switch is via the TPMS 200 amp fused disconnect (UD10TPS1) in the engine/generator shelter to the TPS. When the TPS is operating, the site critical power is routed through the closed maintenance bypass module (MBM) (UD64) input breaker (UIB) (UD64CB1) to the TPS input. The TPS output is then routed through the closed MBM output breaker (UOB) (UD64CB3) to the secondary power panel in the RDA via the critical equipment contactor (UD7S6). When the TPS is not operating, power flows from the TPMS 200 amp fused disconnect (UD10TPS1) through the closed MBM maintenance bypass breaker (MBB) (UD64CB2) to the secondary power panel via the contactor and the MBM breakers UIB and UOB would be open.

- At NWS redundant systems sites with TPMS Type 7 shelter or TPS only configuration, non–critical power from the auto–transfer switch is routed through a

225 amp circuit breaker (UD10TPS5CB5) in the engine/generator shelter to the main power distribution panel (UD7A2) in the radar equipment shelter. Non–critical power is then supplied to various site loads and to the TPMS power distribution panel. The critical power feed from the auto–transfer switch is via the closed TPMS 200 amp fused disconnect (UD10TPS1) in the engine/generator shelter to the TPS. When the TPS is operating, the site critical power is routed through the closed maintenance bypass module (MBM) (UD64) input breaker (UIB) (UD64CB1) to the TPS input. The TPS output is then routed through the closed MBM output breaker (UOB) (UD64CB3) to the critical equipment contactor–distribution power panel (CEC–DP) (UD7TPS2) in the RDA shelter. Three 100 amp circuit breakers (UD7TPS2CB1, 2 and 3) in the CEC–DP supply power via the associated critical equipment contactor (UD7S6, 7S36, and 7S37) to the associated secondary power panel (UD7A3, 7A29, and 7A30). Additionally, power panel CEC–DP supplies power to the CEC coil control via a 15 amp circuit breaker (UD7TPS2CB4), supplies power to the hydrogen detector via a 20 amp circuit breaker (UD7TPS2CB5) (TPS only sites), and supplies power to a NOAA weather radio receptacle (TPS only sites) or to a TELCO receptacle (Type 7 only) via a 20 amp circuit breaker (UD7TPS2CB6). When the TPS is not operating, power flows from the TPMS fused disconnect (UD10TPS1) through the closed MBM maintenance bypass breaker (MBB) (UD64CB2) to the CEC–DP power panel and the MBM breakers UIB and UOB will be open.

- At FAA redundant system sites, non–critical power from the auto–transfer switch is routed through the RDA LCB 225 amp circuit breaker to the main power distribution panel (UD7A2) in the twin RDA equipment shelter to supply various site loads. Non–critical power is also supplied to the UPS/Generator module load center power panel to supply loads within the UPS/Generator module itself. When the UPS is operating, the critical power feed from the ATS is routed through the UPS manual bypass (MBP) switch box switch #1 to the UPS Roesel motor generator (RMG) system input. The UPS output is routed to the UPS MBP switch box and through the closed contacts of switch #3 to the critical equipment contactors (UD7S6 and UD7S36). The power is then routed to the critical power distribution panels CP–1 and CP–2 (UD7A3 and UD7A29) where it is distributed to the critical RDA equipment within the RDA shelter. When the UPS is in manual bypass, the power is routed around the UPS RMG through the closed UPS MBP switch box switch #4 (switches #1 and #3 would be open) to the critical power distribution panels.

3–1.7.1.2 Heating, Ventilating, and Air Conditioning Function. The temperature of the generator shelter is thermostatically controlled by a ventilating fan and a heater. When the diesel generator is started, it turns off the fan or heater and opens the shelter intake (two) and exhaust dampers to supply combustion and cooling air for the diesel generator.

3–1.7.1.3 Fire Detection and Suppression Function. The generator shelter has a thermal fire detector. A portable fire extinguisher is located within the shelter.

3–1.7.1.4 Security and Status Monitoring Function. Shelter security is monitored by a door entry sensor. The door security, fire alarm, power status, generator battery status, and generator status

discrete signals; room temperature and diesel fuel level analog signals are routed to the radar equipment shelter via an alarm termination panel.

3–1.7.2 Radar Equipment Shelter. The radar equipment shelter houses the RDA and RPG equipment groups.

3–1.7.2.1 Power Distribution and Lighting Function. When the TPS is operating, the radar equipment shelter receives its critical power from the output of the TPS through the critical equipment contactor to the secondary panel that distributes power to all the critical loads. The shelter non–critical power is routed from the generator shelter to the main distribution panel. This panel distributes power to all the non–critical power functions in the RDA.

At FAA sites, the radar equipment shelter receives its critical power from the output of its rotary UPS. Power distribution is very similar to that for DoD and NWS sites (as described in the previous paragraph).

3–1.7.2.2 Heating, Ventilating, and Air Conditioning Function. The temperature of the radar equipment shelter is maintained by two thermostatically–controlled air conditioners. Intake and exhaust dampers and ducts are provided for emergency cooling of the transmitter. Sensors are provided for interior/exterior temperature, and air conditioner and transmitter exhaust air temperatures and clogged filters.

3–1.7.2.3 Fire Detection and Suppression Function. The radar equipment shelter is equipped with ionization and photoelectric smoke detectors. When triggered manually or by the smoke detectors, the fire detection system activates audible and visual alarms while simultaneously activating a remote trip to remove power from the circuit breakers in the main and secondary power distribution panel(s).

The Halon suppression function for the RDA shelter has been eliminated. A portable fire extinguisher is located within the shelter.

3–1.7.2.4 Security and Status Monitoring Function. An alarm termination panel receives analog and discrete signals for air conditioner and transmitter temperatures and clogged filters, interior/exterior temperatures, fire alarm and fire detection system status, and waveguide component status. In addition, this panel receives alarms and status data from the generator shelter, radar tower, and radome. The alarm termination panel routes all these status signals to the RDASC processing function via the status and control interface function.

3–1.7.3 Radar Tower and Radome. The radar tower and radome support and protect the antenna/pedestal.

3–1.7.3.1 Power Distribution and Lighting Function. Power for the radar tower and radome is supplied via the radar equipment shelter.

3–1.7.3.2 Heating, Ventilating, and Air Conditioning Function. The radome is cooled by a thermostatically–controlled ventilation fan and dampers. Thermostatically–controlled heaters are provided for use during pedestal maintenance and periods of extreme cold to minimize effects on pedestal electronics.

3–1.7.3.3 Fire Detection and Suppression Function. Neither fire detection nor fire suppression equipment is provided at the radar tower and radome.

3–1.7.3.4 Security and Status Monitoring Function. Radome temperature, tower gate, and radome hatch entry status data are sent to the alarm termination panel in the radar equipment shelter.

3–1.7.4 MLOS Shelter. The MLOS shelter houses the MLOS radio cabinet.

3–1.7.4.1 Power Distribution and Lighting Function. A power distribution panel receives power from the radar equipment shelter and routes it to the MLOS radio cabinet and the MLOS tower aircraft warning lights.

3–1.7.4.2 Heating, Ventilating, and Air Conditioning Function. Shelter temperature is maintained by thermostatically controlled ventilation fan and intake/exhaust dampers, or heater.

3–1.7.4.3 Fire Detection and Suppression Function. The MLOS shelter is equipped with an ionization smoke detector. A portable fire extinguisher is located within the shelter.

3–1.7.4.4 Security and Status Monitoring Function. Fire alarm and shelter door entry alarms are sent via an alarm termination panel to the MLOS radio cabinet for transmission to the RPG.

3–1.7.5 Transition Power Maintenance Shelter. The transition power maintenance shelter (TPMS) is installed at NEXRAD sites that require a shelter for the transition power source. The shelter can be supplied in one of nine configurations with the basic differences as follows:

- Type 1 –– Basic shelter with an electric toilet and a 2–ton ECU
- Type 2 –– Basic shelter without a toilet; has a closet and a 2–ton ECU
- Type 3 –– Basic shelter without a toilet or an air conditioner; has two unit heaters, exhaust fan/louvers, and requires intake/exhaust snorkels to extend above snow level. Installed at Medford, OR, and Missoula, MT, only
- Type 4 –– Basic shelter with electric toilet and two 3–ton ECUs (instead of a 2–ton). Installed at desert sites Tucson, AZ, Phoenix, AZ, and Edwards AFB, CA.
- Type 5 –– New style shelter with only one shelter door, one main room, 2–ton ECU, maintenance bypass module, and electric toilet
- Type 6 –– Type 5 without a toilet
- Type 7 –– Type 5 with two 3–ton ECUs and a sun shield over one ECU. Installed at Yuma, AZ only.
- Type 8 –– TPS only configuration. No TPMS shelter. TPS installed in the RDA shelter. Has a TPS cabinet, battery cabinet, maintenance bypass module, and hydrogen detector. The “TPS only” configuration uses the existing RDA cooling system. The TPS power flow sequence passes from the TPS output through the CEC–DP power panel and then to the critical equipment contactors. Installed at NWS redundant mountain top, snow shelter, sites (except for the two Type 3 sites).
- Type 9 –– Type 5 with a longer shelter. Installed at Lajas Field, Azores only.

All shelters are equipped with a workbench and storage cabinets.

3–1.7.5.1 Power Distribution and Lighting Function. Power is supplied from the generator shelter to the transition power source through either fused disconnects or circuit breakers as described in 3–1.7.1.1. The shelter power distribution panel receives its power from the non–critical RDA main distribution panel. The shelter panel then distributes power to shelter lighting, HVAC, electric toilet, and outlets.

3–1.7.5.2 Heating, Ventilating, and Air Conditioning Function. The air conditioning systems in these shelters are comprised of either one 2–ton or two 3–ton exterior wall mounted air conditioner/heater units. These units are of two configurations. At non–coastal TPMS sites, the system designator is UD60A11 (2–ton) or UD60A12/A16 (3–ton). At coastal TPMS sites, the system designator is UD60A15. Refer to NWS EHB 6–554–6 for a description of an air conditioner equipped for a coastal environment. The unit is controlled by a wall–mounted thermostat (UD60A14) that has both the heating and cooling function capability (dual–stage thermostat) when placed in the "AUTO" mode of operation. The heating function is performed by electrical resistance heat coils located in the ECU discharge duct behind the upper grill on the wall or by individual wall mounted units. This design varies based on shelter differences as follows:

- Type 1, 2, 5, 6, and 9 Shelters –– The air conditioning system in these shelters is comprised of a 2–ton exterior wall mounted air conditioner/heater. It is controlled by a wall–mounted thermostat (UD60A14) that has both the heating and cooling function capability (dual stage thermostat) when placed in the "AUTO" mode of operation. This unit is not a "heat pump". The unit has electrical resistance heat coils in the discharge duct behind the upper grill on the wall. This system also has an "economizer" option that allows cooling of the shelter with outside air if the outside ambient air conditions are within the setpoint of the enthalpy controller located in the outside air conditioner housing. If outside temperature and humidity conditions are below the enthalpy settings, the damper will allow outside air to be mixed with inside air to cool the shelter. The temperature of this air mixture should be in the 50–56 °F range. During this time the mechanical A/C compressor is locked out. When ambient air rises above the temperature and humidity setpoint of the enthalpy unit, the damper will close and a call for cooling from the thermostat will start the mechanical cooling. The thermostat should be set with both the system and fan switches in "AUTO" position, the cooling lever set at 75, and the heating lever set at 65.

- Type 3 Shelter –– This type of shelter is used only at Medford, OR, and Missoula, MT. Due to the local weather conditions at these sites, this shelter does not have an air conditioning system. It has a ventilation and heating system consisting of forced air heaters and an exhaust fan with associated louvers to maintain TPMS environmental conditions within a satisfactory temperature band. Two thermostats, a fan thermostat (UD60A2A1) and a louver thermostat (UD60A2A2), control the operation of the exhaust fan (UD60A2A3), motorized exhaust damper (UD60A2A4), and the motorized intake damper (UD60A2A5). The louver thermostat is set at 60 °F and the fan thermostat is set at 70 °F. This ten degree span is necessary to prevent the fan from starting against a closed damper. Ensure that this span setting is always

10 °F or greater. Thus, once the TPMS interior is at/above 60 °F, the intake and exhaust dampers will open to allow for natural circulation of air to remove heat rejected by the TPS. When the interior temperature reaches 70 °F, the exhaust fan will start to provide for forced air recirculation in the TPS room to remove heat rejected from the TPS. During cooler months of the year, when natural convection maintains TPMS interior temperature below 60 °F, two forced air heaters provide additional heat to maintain a satisfactory environment for the TPS. One is located in the maintenance area (UD60A7) and the other is located directly below the motorized intake damper to the left of the TPS (UD60A8). Each heater is controlled by its own thermostat located on the heater housing. This thermostat will control the heater between 50–90 °F. A setting slightly above the minimum position should provide winter heating around the 55 °F range and should not interfere with damper/fan operation in the summer months.

- Type 4 Shelter –– This type of shelter is located at Edwards AFB, CA; Tucson, AZ; and Phoenix, AZ. The air conditioning system (UD60A12/A16) in this type of shelter is comprised of two 3–ton exterior wall–mounted air conditioners, one with and one without an economizer. No heating coils are installed. The air conditioner thermostat should be set with both the system and fan switches in the "AUTO" position and the cooling lever set at 75 °F.
- Type 7 Shelter –– This type of shelter is located at Yuma, AZ. The air conditioning system (UD60A12) in this type of shelter has the same configuration and operates the same as the air conditioners in the Type 1, 2, 5, 6, and 9 shelters except that it has two 3–ton ECUs due to the higher ambient temperatures.

In addition to the ECU and ventilation thermostats noted above, there are two additional thermostats that monitor the interior shelter temperature. There is a shelter high temperature alarm thermostat (UD60A3A1) that is set at 80 °F and a shelter high temperature shutdown thermostat (UD60A2A8) that is set at 90 °F. Refer to Figure 1–7, Figure 1–8, Figure 1–9, or Figure 1–10 for location of the thermostats in each type of shelter. Activation of the shelter high temperature alarm thermostat will result in a loss of the TPS "INVERTER ON" signal to the RDA. The TPS will not actually be in BYPASS mode, but it will alert personnel that something is wrong with the shelter. Activation of the shelter high temperature shutdown thermostat will result in the TPS transferring to bypass and then shutdown. This condition is not alarmed in the RDA due to the current RDA configuration. This power transfer will leave the site critical load supplied by utility power without any ride–through protection during a power outage.

If the shelter only reaches the alarm setting and then cools back down, the "TPS OFF" alarm will reset. If the TPS reaches the high temperature shutdown setpoint and shuts down it <u>will not</u> auto restart when the shelter cools down. The site technician will have to manually restart the unit.

3–1.7.5.3 <u>Security and Status Monitoring Function</u>. Shelter security is monitored by magnetic alarm contacts at each entry door. The transition power source operating status is monitored by the TPS alarm and safety shutdown monitoring circuitry in the TPS control circuitry. Signals from the magnetic alarm contacts and the TPS monitoring circuitry are relayed to the RDA processor from the TPMS alarm termination panel. Presently, RDA software build 10.0 can only receive the TPMS magnetic door contact status and the TPS inverter on status.

3–1.7.6 Transition Power Source (UD62). The TPS is a Powerware 9315–50 and is a continuous duty, solid–state, reverse transfer system that consists of a battery, solid–state rectifier, inverter, static switch, control panel, and microprocessor–controlled logic.

During normal TPS operation, power flow is derived from the utility source. In the TPS, the AC power is converted to DC using a full–wave, six–pulse, solid state rectifier that supplies nominal DC voltage to the inverter while also maintaining a charge on the battery.

The inverter assembly produces a three–phase regulated output utilizing pulse–width modulation (PWM). The K3 contactor connects the inverter output to one of two output transformer primary windings. The output transformer secondary winding is connected to the site critical load.

When power is lost, the TPS reverts to the battery mode.

With the return of utility or site E/G power, the power flow automatically reverts back to the rectifier. The system returns to normal operation and begins to recharge the battery while continuing to supply the critical load.

During an inverter failure, a transfer to BYPASS is automatic. The static switch gates ON, K3 contactor isolates the inverter from the output transformer, and K4 closes. The bypass transformer primary is now energized.

The two main functions of the TPS are to provide complete electrical isolation of the critical load from spikes, surges, sags, and to provide ride–through capability. When utility power is lost, the TPS will continue to provide electrical power to the critical load contactor in the RDA until the site E/G starts and comes on line.

During a complete utility failure and failure of the site E/G, the TPS provides nine minutes of continuous, clean power at full rated load (40 kW @ .8 pf) through the use of the installed battery bank.

The TPS output is phase–locked to the input voltage frequency to allow a make–before–break transfer to the bypass source in the unlikely event of a TPS shutdown. Closed transition transfers can be made from both operating conditions; TPS output to bypass and from bypass to TPS output. In addition, a complete manual TPS bypass (maintenance bypass) is provided that allows for total electrical isolation of the TPS unit permitting maintenance, repair, or replacement of the TPS components without interrupting power to the critical load.

3–1.7.6.1 Transition Power Source Power Distribution. Power from the auto–transfer switch is routed via the TPS fused disconnect (UD10TPS1) in the engine/generator shelter to the TPS input fused disconnect (UD61A5S1) or maintenance bypass module (MBM) input breaker (UIB) (UD64CB1) and to the normally open TPS maintenance bypass fused disconnect (UD61A5S2) or MBM bypass breaker (MBB) (UD64CB2). Power from the TPS output is routed via the TPS output fused disconnect (UD61A5S3) or MBM output breaker (UOB) (UD64CB3) to the site critical load. The TPS internal bypass contactor (UD62K4) will automatically close should the TPS output contactor (UD62K3) open for any reason. When the TPS is shutdown for maintenance, the TPS maintenance bypass fused disconnect (UD61A5S2) or the MBM bypass breaker (MBB) (UD64CB2) is closed to maintain power to the RDA. At the NEXRAD Medford, OR and Missoula, MT sites power from the auto–transfer switch is routed to the TPS via a 225 amp breaker in the engine/generator shelter main power distribution panel.

3–1.7.6.2 Transition Power Source Cooling. The TPS is cooled using either the TPMS environmental control unit (ECU) or the TPMS ventilation system (Type 3 shelters only). Air is circulated through the TPS using fans located behind the filters in the door of the TPS. The heat exhausted from the TPS is removed by the ECU or by operation of the TPMS exhaust fan in Type 3 shelters. The primary reason for controlling the TPMS interior temperature is to maintain an environment to optimize TPS battery life. The optimum battery life is obtained if the environment is maintained at or below 77 °F. If the batteries are subjected to higher temperatures, their useful life will be shortened based upon two factors, the temperature and the length of time the batteries are exposed to that temperature.

3–1.7.6.3 Transition Power Source Status Monitoring. The operating status of the transition power source is displayed on the TPS monitor panel. The operating status of the TPS is also relayed to the data acquisition unit (DAU) via wiring between the TPS, the TPMS alarm termination panel, and the engine generator alarm termination panel. With RDA software build 10.0, the only TPS status alarm supported is the "TPS System Normal" (Inverter On) input. Should the TPS go to the bypass mode, this alarm will be sent to the DAU and displayed on the RDA and MSCF monitors as a "TPS OFF" alarm.

3–1.8 REDUNDANT SYSTEM.

A redundant system provides alternate RDA and RPG functions to maintain system operation in the event of an equipment failure. There are two types of redundant systems. They are called the FAA redundant system and the NWS redundant system after the agencies that use them. The FAA redundant system contains two RDA groups and two collocated RPGs; each RDA group communicates with its associated RPG (Figure FO3–3, sheet 1). The NWS redundant system contains two RDA groups, one RPG, and a wideband communication switch that connects either RDA group to the RPG. The RDA group of both types of redundant systems is only partially redundant. There is only one tower, antenna, pedestal, generator, and equipment shelter. Both types of redundant systems have waveguide switches to choose which transmitter and receiver channels have access to the antenna.

3–1.8.1 FAA Redundant Systems. In an FAA redundant system, one RDA/RPG channel is on–line while the other is in powered–on standby or is off–line for maintenance. Channel 1 consists of an RDA group (also referred to as RDA 1) which is comprised of RDA cabinet UD105, receiver cabinet UD104, transmitter cabinet UD103, waveguide pressurization unit UD106, and RPG processor/communication assembly cabinet UD170 (also referred to as RPG 1). Channel 2 consists of an RDA group (also referred to as RDA 2) which is comprised of RDA cabinet UD5, receiver cabinet UD4, transmitter cabinet UD3, waveguide pressurization unit UD6, and RPG processor/communication assembly cabinet UD70 (also referred to as RPG 2).

3–1.8.1.1 Pedestal. The pedestal assembly has a second receiver front end and a waveguide switch to switch the antenna feed between the two front ends. Control of the pedestal is performed through the pedestal digital control unit A6 and pedestal power amplifier A7, both housed only in the Channel 2 RDA, UD5. The pedestal digital control unit (DCU) receives azimuth and elevation command inputs from both RDASC1 and RDASC2, and an RDA1/RDA2 command from DAU 1, which tells the DCU which RDASC processor to accept commands from.

3–1.8.1.2 Status and Control. Status and control data are exchanged between RDA 1 and RDA 2 through an RDA interprocessor link. The two RPGs exchange information through an RPG TCP/IP interprocessor link. Information exchanged includes control data, status data, adaptation data, and state data.

3–1.8.1.3 Communications. In an FAA redundant system, the RDA and RPG are always collocated. Thus, the WBC group is hardwired (see paragraph 3–1.3.2). The narrowband communications function contains relay box UD31 which is used to switch narrowband lines from either RPG Channel 1 or RPG Channel 2 to associated and non–associated users. Changeover from one RDA/RPG channel to the other is controlled automatically or upon command from a distant MSCF. The distant MSCF link is switched in the relay box, and then goes to a dedicated–port modem or a router serial fractional T1 port in each channel depending on whether frame relay service is used. Thus the distant MSCF provides an operator interface from which control and monitoring functions are carried out.

3–1.8.1.4 FAA Remote Monitoring Subsystem. FAA redundant sites have an RMS capable of monitoring selected parameters in the transmitter, receiver, RDADP, and the RPG. It also provides remote control functions for the transmitter and the RDA and RPG via the respective application software and system ports.

3–1.8.2 NWS Redundant System. In an NWS redundant system, one RDA channel is on–line while the other is in powered–on standby or is off–line for maintenance. The single RPG is always on–line. Channel 1 consists of an RDA group (also referred to as RDA 1) which is comprised of RDA cabinet UD105, receiver cabinet UD104, transmitter cabinet UD103, and waveguide pressurization unit UD106. Channel 2 consists of an RDA group (also referred to as RDA 2) which is comprised of RDA cabinet UD5, receiver cabinet UD4, transmitter cabinet UD3, and waveguide pressurization unit UD6. Either is connected to the RPG processor/communication assembly cabinet UD70 through a wideband communication switch.

3–1.8.2.1 Pedestal. Similar to an FAA redundant system, the pedestal assembly has a second receiver front end and a waveguide switch to switch the antenna feed between the two front ends. Control of the pedestal is performed through pedestal digital control unit A6 and pedestal power amplifier A7, both housed only in the Channel 2 RDA, UD5. The pedestal digital control unit (DCU) receives azimuth and elevation command inputs from both RDASC1 and RDASC2, and an RDA1/RDA2 command from DAU 1, which tells the DCU which RDASC processor to accept commands from.

3–1.8.2.2 Status and Control. Status and control data are exchanged between RDA 1 and RDA 2 through an RDA interprocessor link.

3–1.8.2.3 Communications. The WBC group consists of private or TELCO T1 service provided through the use of CSUs. The PUP group is not affected by NWS redundancy. Change over from one RDA/RPG channel to the other is controlled automatically or upon command from a remote RDA maintenance terminal. Signals from both RDAs are statistically multiplexed in RPG 2 before being sent, via dial–port modem, to the remote RDA maintenance terminal. The remote RDA maintenance terminal receives and separates the signals through a dial–port modem and STATMUX.

Section 3−2. Functional System Operation

3−2.1 INTRODUCTION.

This section provides additional insight into the functional operation of the WSR−88D System. The equipment−group functions introduced in Section 3−1 are further defined in terms of the equipment that comprise them, the operations they perform, and the basic signal flow that interconnects them. The RDA, WBC, RPG, MSCF, PUP, and RPIE equipment groups are discussed in paragraphs 3−2.2 through 3−2.7, respectively. These discussions are directed toward a nonredundant system. A redundant system is discussed in paragraph 3−2.8. The information contained herein is directed toward the technically oriented operator, and especially toward the maintenance technician. It is intended to survey the breadth of system functioning in one place, and in so doing, provide coherence.

3−2.2 RDA GROUP.

The RDA equipment group consists of seven equipment items. The function of this equipment is shown in Figure FO3−4 and discussed in paragraphs 3−2.2.1 through 3−2.2.7.

- Waveguide components (UD1/UD7)
- Antenna/pedestal (UD2)
- Radar transmitter (UD3)
- Radar receiver (UD4)
- RDA data processor cabinet (UD5)
- Waveguide pressurization unit (UD6)
- Optional Archive II units (UD16)

3−2.2.1 Waveguide Components (UD1/UD7). The waveguide components consist of a series of microwave control devices and waveguide sections which couple the output of the radar transmitter to the antenna/pedestal. The waveguide control devices provide the following functions:

- Attenuate unwanted frequency components in the transmitter signal.
- Suppress reflected energy.
- Include a waveguide switch, which when a radiate command is present and all interlocks are closed, is electronically positioned to pass the RF pulse to the antenna/pedestal. Otherwise, RF radiation is directed into the dummy load.
- Provide (via the radar receiver) a high−power RF sample to the RDADP for on−line and off−line radar transmitter output power calibration.
- Provide an indication of waveguide circulator over temperature to the DAU.

3–2.2.2 Antenna/Pedestal (UD2). The antenna/pedestal (UD2) consists of a pedestal assembly (UD2A1), antenna/feed assembly (UD2A2), receiver protector (UD2A3), low noise amplifier (UD2A4), and a power monitor (UD2A5).

3–2.2.2.1 Pedestal Assembly (UD2A1). The pedestal assembly provides support to the antenna assembly, and contains the azimuth/elevation drive units and the position measuring data packages. The pedestal electronics are located in RDADP cabinet UD5. The pedestal assembly drives the antenna in an elevation over azimuth configuration. It rotates the antenna continuously in azimuth (clockwise) at a maximum speed of 6 revolutions per minute (RPM). The pedestal elevation drive assembly permits movement in incremental steps in elevation from –1° to +45° (+60° in test), typically at the rate of one step per revolution. (The normal operating range is –1° to +20°.) The pedestal is driven by commands from the RDA status and control processor via a digital control unit (DCU) (UD5A6) and a power amplifier unit (UD5A7). Antenna position data is generated by the pedestal assembly and sent to the digital control unit. The pedestal assembly also monitors critical internal operating conditions. These signals are also routed to the digital control unit.

3–2.2.2.2 Antenna/Feed Assembly (UD2A2). High–power RF from the radar transmitter is routed, via the pedestal, to the antenna. The 28–foot diameter parabolic reflector generates a horizontally polarized 0.95° pencil beam. The reflector also collects RF echoes and directs them into the horn. The echo RF passes through the feed horn and is directed to the receiver front end in the pedestal.

3–2.2.2.3 Receiver Front End (UD2A3/A4). The receiver front end consists of a receiver protector (UD2A3) and a low noise amplifier (UD2A4).

3–2.2.2.3.1 Receiver Protector (UD2A3). The receiver protector is controlled by a hardwired signal processor (UD5A10), via a receiver (UD4). During RF transmission it blocks the receiver RF path from the othogonal mode transducer (OMT). After the RF transmission, the receiver protector opens allowing the received echo signal to pass to the low noise amplifier.

3–2.2.2.3.2 Low Noise Amplifier (UD2A4). The low noise amplifier amplifies the received echo and sends it to the radar receiver (UD4).

3–2.2.2.4 Power Monitor (UD2A5). The power monitor measures the power level of the transmitted pulse at the elevation rotary joint (just prior to the antenna). The power measurement is sent via DAU (UD5A3) to the RDASC processor for use in on–line calibration.

3–2.2.3 Radar Transmitter (UD3). The radar transmitter receives commands and triggers from HSP (UD5A10), and control and status commands from DAU (UD5A3). It also receives an RF excitation pulse from the radar receiver (UD4), and uses it to develop a Klystron drive pulse. A sample of the drive pulse is sent to the radar receiver for use during calibration. The primary output of the radar transmitter is the high–power RF, which is sent through the waveguide and pedestal to the antenna. The transmitter functions are continuously monitored via BITE. The BITE also provides the capability to isolate a fault to the LRU level, under control from RDA maintenance terminal and from a maintenance panel within the transmitter cabinet. The status of internal and external interlocks is also continuously monitored. In addition to being sent to the DAU, fault and interlock information is used to prevent undesirable control actions, and to turn off the high voltage when potentially damaging conditions occur. Automatic recycling is provided to allow unattended operation.

3–2.2.4 Radar Receiver (UD4). The RF echo (radar return) from the receiver front end in the pedestal assembly (UD2A1) is applied to the radar receiver. It bandpass filters this signal and mixes it with a STALO signal to convert the RF echo to IF. The IF signal is then attenuated to avoid clipping. The attenuated IF signal is then mixed with a COHO signal to develop I and Q video signals, which are sent to HSP UD5A10. A signal is also developed that is proportional to the log of the IF echo signal power. The I, Q, and log video signals are sent to the HSP via an A/D converter. The log video may also be processed with log video signals derived from auxiliary guard band filters and log video amplifiers to determine whether interference is present. If interference is detected, an interference tag is sent to the HSP to indicate that the I and Q video is not valid. This interference detection capability is configured with optional modules and is not provided at all sites. In addition to the video processing functions, the radar receiver contains the following functions.

3–2.2.4.1 Test Source Select Function. A test source select function, which under control of the HSP, selects one of four signals to be injected into the receiver front end and into the radar receiver's video conversion circuits. These signals are of known values and are used to test and calibrate the receiver functions.

3–2.2.4.2 Master Signal Generator Function. A master signal generator function which generates the STALO and COHO signals that are used by the receiver channel, a test signal that is sent to the test source select function, and a 10–milliwatt RF pulse that is sent to the transmitter as RF excitation, and provides the HSP clock.

3–2.2.4.3 Receiver Fault Isolation Function. A receiver fault isolation function is controlled by the HSP and monitors many signals within the radar receiver. It sends a digital word to the HSP, that represents the peak value of the signal it was told to monitor.

A Type I archive interface (analog receiver video) port is provided.

3–2.2.5 RDADP Cabinet (UD5). The RDADP cabinets (UD5 and UD105) (Figure 1–12) provide for local control of the RDADP during maintenance, form and transmit RDA data to the RPG, determine RDA status, and perform monitoring functions. The following paragraphs provide a description of the UD5 and UD105 cabinets for the FAA redundant and NWS redundant sites. Type II archiving interfaces (digital base data) are also located in UD5. The Type II archive receives and stores digital base data. It can also store antenna position data, RDA maintenance terminal data, and DAU discrete status data.

3–2.2.5.1 FAA and NWS Redundant RDADP Cabinets (UD5 and UD105). Both RDA data processor cabinets (UD5 and UD105) consist of the VME assembly (A1), maintenance panel assembly (A2), data acquisition unit (DAU) (A3), alphanumeric terminal (A4), small computer system interface (SCSI) assembly (A5), programmable signal processor (PSP) (A9), hardwired signal processor (HSP) (A10), signal processor fan assembly (A11), RDASC processor (A12), AC fan tray (A13), I/O panel (A16), A/B switch (A17), and power supplies (PS1 through PS5). A modified VME configuration will be provided for FAA redundant sites. This configuration provides VME power supply output status to the RMS.

3–2.2.5.1.1 FAA Specific. The FAA RDADP cabinet (UD5) also contains the DCU (A6), power amplifier unit (A7), and choke assembly (A25). The DAU (UD5A3 and UD105A3) makes the connection between the pedestal, control and amplification equipment and either RDASC processor (UD5A12 or UD105A12).

Both FAA RDADP cabinets (UD5 and UD105) contain an A/B switch (UD5A17 and UD105A17). When in the "B" position the switch connects the RDA maintenance terminal (UD5A4 and UD105A4) and the RDASC system console port (UD5A12 and UD105A12). When in the "A" position, the switch connects the RDA maintenance terminal and the associated RPGPCA.

3–2.2.5.1.2 NWS Specific. The NWS RDADP cabinet (UD5) also contains an automatic A/B wideband communication switch (A19), channel service unit (CSU) (A18), DCU (A6), power amplifier unit (A7), and choke assembly (A25).

The automatic A/B wideband communication switch connects the RPGPCA and either RDASC processor wideband port (UD5A1 or UD105A1).

The CSU (UD5A18) converts the format of the wideband data from the automatic A/B wideband communication switch and sends it to the RPG which is located remotely from the equipment shelter.

The NWS RDADP Cabinets (UD5 and UD105) contain an RDA/RPG remote access terminal (RRRAT) (UD5/105A38) which consists of a terminal, CPU, keyboard, mouse, and the capability to connect to the internet. The RRRAT equipment replaced the alphanumeric terminals (CDT–100) (UD5/105A4).

The NWS RDADP cabinet (UD105) contains a dial port modem (A21) and a STATMUX (A20). The stand–alone dedicated modem and STATMUX facilitate communication with the remote RDA maintenance console.

Both RDADP cabinets (UD5 and UD105) contain a dual A/B switch (A17) and a relay assembly (A24). The dual A/B switch, when in the "A" position, connects the RDA maintenance terminal (UD5A38 and UD105A38) and both RDASC processor system console and application terminal ports (UD5A12 and UD105A12). When in the "B" position, the switch connects both RDASC processor system and application ports and the RDA maintenance console (UD32) located with the distant MSCF. Also, when in the "B" position, the outputs from both dual A/B switches (UD5A17 and UD105A17) are connected to a STATMUX (UD105A20). The relay assembly (UD5A24 and UD105A24) disconnects power from the equipment when it is commanded.

3–2.2.5.2 Versa Module Eurocard Chassis (UD5A1). The VME chassis contains the industry–standard VMEbus, which interfaces the RDASC processor with wideband communications. The VMEbus interface function contains two VMEbus to VCI boards. One board (VCI–C) is housed in the chassis of the RDASC M3200 processor (UD5A12). The VCI–C board ties directly into the processor's memory via the MUX and DMA buses. The other card (VCI–V) is housed in the VME chassis. The two cards are connected by a cable bus. The VCI–V card connects to wideband interface boards through the VMEbus, all of which are housed in the VME chassis. The wideband boards provide high–level data link (HDLC) formatting and T1 framing for transmission and reception of data to and from the RPG via the wideband communications group.

3–2.2.5.3 RDA Maintenance Panel (UD5A2). The maintenance panel provides the following: status lamps for utility/generator power and a watchdog timer to detect lack of communication with the RDASC processor; adjustments for antenna and transmitter power meters; power switches for the DAU, DCU, and power amplifier unit, and an audible alarm used to signal RDA failures.

3–2.2.5.4 DAU (UD5A3). The DAU interfaces the RDASC to various monitoring and control functions within the RDA. A total of 34 discrete data bits (including spares) from status and fault contact closures throughout the RDA, plus a BITE status word and three status discretes from the radar transmitter, are routed to the DAU. The DAU also receives 24 analog signals (including spares) from temperature sensors, power supplies, and other sources around the RDA. This data is processed to form A/D data words. The DAU multiplexes the discrete signals together, combines them with the A/D data words and transmitter BITE words, and transfers the resulting digital words serially to the RDASC processor. The DAU receives command and control data from the RDASC. This data is used to control the operation of the DAU, and to generate discrete signals to control the radar transmitter, digital control unit, waveguide switch, status lamps and audible alarm on the RDA maintenance panel, and auto–transfer switch (generator shelter).

3–2.2.5.5 RDA Maintenance Terminal (UD5A4). The maintenance terminal provides the RDASC processor man–machine interface to control the RDA when in local mode; to allow monitoring; to initiate test of the RDA; to startup and initialize the processor, and to load the tape to disk as required. The RDASC processor also interfaces with the maintenance panel to control, monitor, and display various functions used during maintenance.

3–2.2.5.6 Small Computer System Interface Assembly (UD5A5). The SCSI assembly consists of a streaming tape drive, a 600–MB fixed disk, and a SCSI. The SCSI assembly provides the interfacing for data transfer to and from mass storage (fixed disk) and the stream tape.

3–2.2.5.6.1 Streaming Tape Drive. The streaming tape drive is used to transfer the RDASC program with adaptation data, PSP, RDASOT program, and the operating system (M3200 processor) program from a 600–foot, 1/4–inch, 150–MB magnetic tape cartridge to the fixed disk for use by the RDASC processor. This program data is transferred (down loaded) to the fixed disk for use by the RDASC.

3–2.2.5.6.2 600–MB Fixed Disk. The 600–MB fixed disk stores the RDASC, PSP, RDASOT, and operating system programs for normal RDASC processor access. It also stores calibration data, RDA equipment status, adaptation data, clutter maps, volume coverage patterns, and clutter censor zone data downloaded from the RPG. The fixed disk is an intelligent peripheral with an embedded SCSI controller.

3–2.2.5.7 Power Amplifier (UD5A7). The power amplifier receives antenna azimuth and elevation positioning commands from the DCU (UD5A6). The power amplifier develops and provides the drive power to the pedestal assembly's azimuth and elevation drive motors. The power amplifier sends status and fault data to the DCU. The power amplifier is also used in redundant configuration UD5 only.

3–2.2.5.8 Digital Control Unit (UD5A6). The DCU interfaces the RDASC with the antenna/pedestal. It receives antenna azimuth/elevation positioning commands directly from the RDASC, and standby/operate commands via the DAU (UD5A3). It routes the antenna positioning commands to the antenna/pedestal via the power amplifier (UD5A7). The pedestal assembly (UD2A1) sends antenna position data to the RDASC, via the DCU, to close the antenna control loop. Critical operating conditions are monitored throughout the antenna/pedestal and status signals are routed to the RDASC via the DCU. The DCU is also used in redundant configuration UD5 only.

3–2.2.5.9 Programmable Signal Processor (UD5A9). The PSP extracts base weather data from the radar data and provides the computer interface between the HSP and the RDASC. Control data from the RDASC is passed unaltered through the PSP to the HSP. The PSP receives time–series digital data (video) from the HSP and develops echo power, reflectivity, velocity, and spectrum width data arrays. These arrays are sent to the RDASC for data base formatting. Strong point clutter censoring and range unfolding is also performed by the PSP. Upon system initialization, the PSP transfers microcode processing instructions from an erasable programmable read only memory (EPROM) to RAM and receives utilization data from the RDASC and stores it in RAM. The microcode provides the detailed instructions for all array processing routines. The PSP also receives macrocode command instructions which call and provide data to the microcoded routines. These control waveform processing mode selection and provide synchronization and timing command sequences. The command macrocode is downloaded for each radial, and is stored in RAM. The PSP also receives clutter–map data on a radial–by–radial basis, which it routes to the HSP for clutter suppression processing.

3–2.2.5.10 Hardwired Signal Processor (UD5A10). The HSP receives attenuated I, Q, and log video data (serial digital), attenuation (AGC) information, and an interference tag from the radar receiver. The HSP uses the attenuation information to rescale the video data to recreate the original signal amplitude. (The process of attenuation in the radar receiver and expansion in the HSP extends the dynamic range of signal power that can be processed.) The I, Q, and log video data is then processed to filter out ground clutter where required. This filtering process converts the raw data into valid base data, which is sent to the PSP for further processing. The HSP also acts as an interface between the PSP and the radar receiver. It routes timing and control signals to the radar receiver, and receiver status data to the PSP. Finally, the HSP contains the master timing generator for the radar transmitter, radar receiver, and RDASC processor.

3–2.2.5.11 RDASC M3200 Processor Assembly (UD5A12). The RDASC operates under local or remote control. Under local control it performs the various turn–on and shutdown procedures and sets RDA mode, based on control inputs from the RDA maintenance terminal. Under remote control, the standby or operate mode is selected and the basic operations are performed in response to the control inputs from the MSCF in the RPG. Under normal remote control operation, the scan pattern to be executed, waveform types, pulse repetition periods, pulse widths, and other control parameters are supplied by the RPG from the MSCF. The RDASC processor generates the pedestal control commands, closes the position loops of the pedestal, and serves as the control processor for the PSP. It monitors and assesses the performance of the RDA, initiates automatic calibration, performs calibration calculations, and reports RDA status to the RPG. It adds header data to the reflectivity, mean radial velocity, and spectrum width data received from the PSP, and initiates data transfer to the RPG. The RDASC processor has internal (bus) interfaces with data storage assembly (UD5A5), VME chassis (UD5A1), PSP (UD5A9), and Archive II. It has external (peripheral device) interfaces with the data acquisition unit (UD5A3), DCU (UD5A6), and maintenance terminal. The RDASC processor consists of an M3200 processor assembly (A12) which contains the semiconductor operating memory, the central processing unit, and peripheral interfaces mentioned above.

3–2.2.5.12 A/B Switch (UD5A17). The RDA maintenance terminal provides the generator–machine interface to the RDASC processor. The maintenance terminals system console can also be configured as the RPG system console via the A/B switch (UD5A17). This capability is

only present in the RPG/RDA collocated configuration and the FAA redundant configuration. The NWS redundant system RDADP has dual A/B switches (UD5A17 and UD105A17) which allow a remote RDA maintenance console (UD32) access to perform the same functions available to the (local) RDA maintenance terminal.

3–2.2.5.13 Channel Service Unit (UD5A18). The CSU function is a signal repeater for the 1.544 Mbps digital signal from either the RDA or RPG processor's VME wideband communications card. The CSU only regenerates the bipolar bit stream from the wideband communications card and is transparent with respect to the specific T1 framing and coding. The CSU is used in the NWS redundant configuration Channel 2 RDA cabinet (UD5). The CSU is not used in FAA redundant configurations.

3–2.2.5.14 Power Supplies and Subsystems. The RDA data processor cabinet houses four power supplies (PS1 through PS4) and the swing–out power subsystem assembly (PS5) which provides operating power for the following: DAU (UD5A3), maintenance panel (UD5A2), HSP (UD5A10), PSP (UD5A9), and M3200 processor assembly (UD5A12).

3–2.2.5.15 Automatic A/B Wideband Communication Switch (UD5A19). This communication switch (UD5A19) is only used in NWS redundant configurations and is located in the Channel 2 RDADP cabinet (UD5). It is controlled by a signal it receives from the DAU (UD5A3). The switch makes the connection from the RPGPCA through the CSU to either RDADP (UD5 or UD105).

3–2.2.6 Waveguide Pressurization Unit (UD6). The waveguide pressurization unit maintains waveguide pressure with dry air to prevent arcing.

3–2.2.7 Archive II Unit (UD16). The Archive II recorder equipment provides the automatic recording of digital radar data from the Archive II port of the RDASC at selected sites. The unit is used to record weather base data and RDA status information.

3–2.3 WBC GROUP.

The WBC equipment group consists of either a hardwire, MLOS link, private T1, or TELCO T1. The wideband communication links are shown in Figure FO3–5 and discussed in paragraphs 3–2.3.1 through 3–2.3.2.

3–2.3.1 Hardwired WBC. The hardwired WBC connects the VME wideband board within the RDA VME chassis (functionally part of status and control processor) and the RPG RDA/RPG gateway when the equipment groups are collocated. It is two pairs of digital data input/output wires that provide the communications media for the RDA to RPG wideband data.

3–2.3.2 MLOS WBC. The MLOS WBC can be configured in two different ways by site: RDA non–space and RPG non–space diversity. The non–space diversity configuration is discussed in the following paragraphs.

3–2.3.2.1 MLOS Radio Cabinets (UD19 and UD39). The MLOS radio is mounted in a MLOS radio cabinet. The radio is configured with a non–diversity RDA or RPG. If the RDA MLOS antenna is mounted on the radar tower, the MLOS radio cabinet (UD19) is located in the radar equipment shelter. If the RDA MLOS antenna is mounted on a separate tower, the MLOS radio

cabinet (UD19) is located in a MLOS shelter. At an RPG site, the MLOS radio cabinet (UD39) is usually located in the user's facility, but may be located in a MLOS shelter. The MLOS radio cabinet has two different configurations of the following equipment: bandpass filter assembly, antenna coupler, MLOS transceiver, MLOS receiver, minimaster, short haul modem, remote station, and power supply. The function of these assemblies is discussed in paragraph 3–2.3.2.1.1 through 3–2.3.2.1.7. Table 3–3 provides a correlation of the assemblies in the two MLOS cabinets (UD19 and UD39).

3–2.3.2.1.1 Bandpass Filter Assembly (A1). The bandpass filter assembly contains a bandpass filter module used with a non–diversity RDA/RPG. The bandpass filter is located between the antenna coupler and receiver input. It suppresses electromagnetic interference at the receiver's input.

3–2.3.2.1.2 Antenna Coupler (A2). The antenna coupler contains two bandpass filters and three circulators. The transmit signal from the transceiver is coupled through the transmitter circulator and bandpass filter, antenna circulator, to the antenna. The received signal from the antenna passes through the antenna circulator and is routed through the receiver bandpass filter and circulator. The bandpass filters provide the frequency preselect requirements and the circulators suppress reflected emissions within the transmission line.

3–2.3.2.1.3 MLOS Transceiver (A3–A11). The MLOS transceiver consists of a modulator and transmitter to convert the input data into a modulated microwave carrier signal, a receiver and demodulator to extract that data signal from the received microwave signal, and supporting assemblies.

Table 3–3. MLOS Radio Cabinet, Assembly Correlation

	Assembly Reference Designation	
Assembly Name	**RDA (UD19)**	**RPG (UD39)**
Bandpass filter	A1	A1
Antenna coupler	A2	A2
MLOS transceiver	A3–A11	A3–A11
Transmitter	A3	A3
Meter alarm panel	A4	A4
Modulator	A5	A5
Jackfield	A6	A6
Demodulator	A7	A7
Mod/demodulator power supply	A8	A8
Fuse Panel	A9	A9
Receiver	A10	A10
Orderwire	A11	A11
Minimaster	–	A18
Short haul modem	–	A18A1
Remote station	A19	A19
Power supply	A38	A38

3–2.3.2.1.4 Minimaster (A18). The minimaster, located in the RPG MLOS radio cabinet, controls the monitoring of transceiver/receiver alarms. It continuously polls the remote station assemblies located in the RPG and RDA MLOS radio cabinets, requesting the status of the various alarms. The remote stations respond by sending the requested alarm status. The minimaster formats these alarm status signals into a serial word, which is sent to the RPG product generation processor via a short haul modem (A18A1).

3–2.3.2.1.5 Short Haul Modem (A18A1). The short haul modem, located in the RPG MLOS radio cabinet, converts the serial digital alarm data from the minimaster into a modulated audio carrier for asynchronous transmission over a twisted–pair cable to the RPG product generation processor. At the RPG, the short haul modem (UD70A19) converts the audio carrier back into serial digital data, which is fed to the product generation processor.

3–2.3.2.1.6 Remote Station (A19). The remote station monitors the alarm status of the modulator, transmitter, receiver, and demodulator assemblies in the transceiver(s). The minimaster (A18) in the RPG MLOS radio cabinet polls the remote station continuously or directly if it is located in the RPG MLOS radio cabinet, or via microwave link if it is located in a RDA cabinet. The remote station responds by sending the requested alarm status. Each MLOS radio cabinet is intermittently faulted,

to verify that the alarms are functioning. If the MLOS radio cabinet is in a MLOS shelter, the remote station also polls shelter and alarms signals.

3–2.3.2.1.7 Power Supply Assembly (A38). The power supply assembly, contains two power supplies that provide direct current (DC) voltages to cabinet assemblies.

3–2.3.2.2 MLOS Antennas. At the RDA site, the antenna may be mounted on the radar tower (UD11) or a separate dedicated tower (UD20). At the RPG site, the antenna may be mounted on the user facility's roof, on an existing tower, or on a dedicated tower (UD40). The antenna transmits and receives. Depending on site requirements, the antenna is a shielded 6, 8, or 10 foot dish with a planar radome; or a 6–foot grid. The antenna/tower correlation is as follows:

	Radar Tower UD11	RDA MLOS Tower UD20	RPG MLOS Tower UD40
High Antenna	A4	A1	A1, A3

3–2.3.3 Private or TELCO T1 WBC. A CSU at the RDA and at the RPG are used to communicate between the RDA and RPG. The CSUs act as signal repeaters for the VME wideband board interface in the RDA's VME chassis and the RDA/RPG gateway in the RPG.

When the distance between the RDA and RPG is less than 3,000 ft., a private T1 connection between the RDA's CSU and the RPG's CSU is used. The private T1 connection consists of two twisted wire pairs owned and maintained at the site.

The CSUs have sensitive receivers, therefore they can be used to a distance of 3,000 ft. The CSUs also contain line build out switches for maintaining a continuous connection at such a distance and surge suppressors.

For distances greater than 3,000 ft., the T1 service is leased from the telephone company, which provides repeaters for virtually limitless distances. For a TELCO T1 connection, the CSUs at the RDA and RPG provide the standard termination through TELCO demarcation panels.

3–2.4 RPG GROUP.

The RPG equipment group consists of four equipment areas. The functional interconnection of these equipment is shown in Figure FO3–6 and discussed in paragraphs 3–2.4.1 through 3–2.4.1.21.

- RPGPCA cabinet (UD70)
- Remote BDDS equipment (UD72, UD73, UD74)
- Relay box (UD31)
- Remote RDA maintenance terminal (UD32)

3–2.4.1 RPG Processor/Communications Assembly Cabinet (UD70). The RPGPCA cabinet houses all of the RPG components necessary to provide weather product generation, local storage,

distribution control, and archiving of selected weather products. The processor receives weather base data from the RDA, performs velocity dealiasing, and stores the dealiased data in shared memory and in disk memory. This data is then accessed and converted into base and derived weather products. These products are returned to shared memory and selectively archived. Distribution control responds to and services the product requests from associated users (NWS AWIPS, PUP, DoD OPUP, FAA WARP, FAA ITWS, FAA OSD) and non–associated users (PUP, DoD OPUP, NWS AWIPS). The processor transfers the requested data to these user interfaces. The processor transmits control commands, volume coverage patterns, clutter censor zones, and requests for data to the RDA.

The RPG processor/communication assembly cabinet consists of two bays. These bays contain the following:

3–2.4.1.1 Base Data Distribution Server Processor (UD70A1). The BDDS receives a retransmission of RDA base data from the RPG processor. The BDDS then converts it to a unique, secure format for retransmission to the optional BDDS users. The BDDS can be housed in the RPGPCA, as in this case, or may be located external to the RPG, typically in a remote location. When located external to the RPG, it is known as the remote BDDS, and will be discussed later, however the BDDS functions are identical regardless of location.

3–2.4.1.2 Router (UD70A2). The router provides external access into the RPG LAN. It has an Ethernet connection on the LAN switch. For all NWS sites, an additional external Ethernet connection is made from the RPG router to the AWIPS LAN either directly or via the frame relay hub router (UD75A1). With this connection, an inter–networked principal user interface is established between the RPG and AWIPS. For DoD and FAA systems, the RPG router or frame relay hub router allows the MSCF to access both the RPG LAN switch and the power administrator through a modem link or a frame relay circuit. For the FAA system, it also allows the MSCF to access both the Channel 1 and Channel 2 RPG LAN switch and power administrator through a modem link or through a frame relay circuit.

Some principal users have inter–networked interfaces to the RPG via the router. Their RPG product data is transferred as TCP/IP datagrams from the processor to the router serial card ports. The TCP/IP datagrams are routed to the respective serial port based on each datagram's destination address. The router encapsulates them in a PPP frame and then ships the serial data to the dedicated/dial modem rack assembly for distribution to the appropriate principal user modem.

3–2.4.1.3 Keyboard, Video, Mouse Switch (UD70A3). The KVM switch is an optional piece of equipment. The KVM switch will be located in the RPGPCA cabinet when the BDDS is also located in the RPGPCA cabinet. It allows the RPG processor and BDDS processor to share a single keyboard, monitor, and mouse.

3–2.4.1.4 17–Inch Monitor (UD70A4). The 17–Inch monitor is connected to the RPG processor. When the BDDS processor is also located in the RPGPCA cabinet, then the monitor will be directly connected to the KVM switch to allow sharing of the monitor between the two processors.

3–2.4.1.5 Keyboard, and Mouse (UD70A5 and UD70A6). The keyboard and mouse will be connected to the RPG processor. When the BDDS processor is located in the RPGPCA cabinet, then the keyboard and mouse will be directly connected to the KVM switch to allow sharing between the two processors.

3–2.4.1.6 RPG Processor (UD70A7). The RPGPCA has an RPG processor that provides product generation, local storage, distribution control, and archiving of selected products and derived data. It controls the RDA operating modes and monitoring of the operational status of the overall WSR–88D system. It provides the graphical HCI for system control and monitoring. It also provides a retransmission of the RDA base data to the BDDS. The RPG processor exercises remote control of the RDA as controlled from the MSCF.

3–2.4.1.7 Archive Storage Devices (UD70A8 and UD70A9). The RPGPCA has a storage device which can act as an Archive III unit and/or for creating back–up copies of system software. The archive storage device is connected directly to the RPG processor in the RPGPCA. Currently only NWS has an Archive III requirement. A second archive storage device (UD70A9) will be an expansion item not available at all sites. The archive storage device can also be used to boot up the RPG if the hard drive is down, and to create software backups.

3–2.4.1.8 Power Administrator Master Switch (UD70A10). The power administrator provides for individual control of AC power to selected devices (eight maximum). This allows a selected device to be powered off and on remotely; thus, achieving a remote reset capability for the device. The power administrator has 8 120–Vac, 15 amp power receptacles and a 15 amp circuit breaker.

3–2.4.1.9 Uninterruptible Power Supply (UD70A11). A UPS provides the uninterrupted AC power for the power administrator and other selected devices in the RPGPCA cabinet (UD70). The UPS comes with Powerchute software which allows the user to monitor the UPS performance.

3–2.4.1.10 RDA/RPG Gateway (UD70A12). The HDLC T1 wideband data enters the RPGPCA from the RDA (DoD/FAA) or from the CSU (UD70A18) for NWS systems. The RDA/RPG gateway converts this data from the T1 DSX–1 analog format to TCP/IP data. It sends this data as TCP/IP to the RPG processor via the LAN switch for product generation.

3–2.4.1.11 Local Area Network (UD70A13). The LAN switch provides the Ethernet network "backbone" for the system. Most all RPGPCA components communicate with each other using TCP/IP, and the LAN switch provides the central interconnectivity point for these devices.

3–2.4.1.12 Dedicated/Dial Modem Rack Assembly (UD70A14). The dedicated/dial modem rack assembly is comprised of analog modems for forwarding the product distributions, and alert information in some cases, to principal users, using designated dedicated or dial lines. The dedicated/dial modem rack assembly receives data for narrowband transmission from the router serial card or the communication server via RS–232 serial links. DoD and FAA systems have an additional modem link for their distant MSCFs or a frame relay link using CSU/DSUs at both the MSCF and RPG.

3–2.4.1.13 Communication Server (UD70A15, A16, A17). Products arriving from the RPG processor for some principal users are transferred as TCP/IP datagrams to the communication server via the LAN switch. The communication server performs protocol conversion from TCP/IP to X.25/LAPB and then ships the data to the dedicated/dial modem rack assembly for distribution to principal users.

3–2.4.1.14 Channel Service Unit (CSU) (UD70A18) (NWS Only). The HDLC T1 data wideband data enters into the RPGPCA CSU from the RDA and then the data is forwarded on to the

RDA/RPG gateway (UD70A12). The CSU is responsible for providing the proper electrical interface to the T1 circuit and for shaping and regenerating the signal. The CSU supports a loopback test from a remote end and a test switch is provided to activate a loopback test from the local end.

3−2.4.1.15 Short−Haul Modem (UD70A19). The short−haul modem is used to interface the MLOS radio cabinet alarm link to the RPG processor. It receives a modulated audio carrier via a twisted pair cable, and converts it to serial digital data for input to the RPG processor.

3−2.4.1.16 RS−232/RS−422 Converter (UD70A20). The RS−232 to RS−422 converter is part of the NWS−only RPG−collocated PUP communication link. The RPG and the collocated PUP communicate without the use of modems since they are a short distance from each other. Without telephone modems, the two systems can communicate at a rate of up to 56 Kbaud. To widen the bandwidth of the channel, an RS−422 link is used. Light emitting diode (LED) indicators on the front of the converter panel indicate the status of the RS−232 and RS−422 signals.

3−2.4.1.17 Power Distribution Panel (UD70A22). The power distribution panel provides a circuit breaker for overcurrent protection. It receives AC power from the EMI power filter (FL1), which is used to reduce conducted emissions.

3−2.4.1.18 Dial Patch Panel (UD70A23). The dial patch panel supports the testing of up to twenty−four, 2−wire dial lines. The panel connects the dial−port modems, via the ACU, dial adapter panel (UD70A24), and the telephone company's demarcation frame to the public telephone switched network.

3−2.4.1.19 Dial Adapter Panel (UD70A24). The dial adapter panel is used to connect the dial−port modems to the dial patch panel (UD70A23). It provides a cable transition between the output cables for up to 24 modems and the single input cable to the telephone patch panel.

3−2.4.1.20 Dedicated Adapter Panel (UD70A25). The dedicated adapter panel is used to connect the dedicated port modems to the dedicated patch panels. It provides a cable transition between the output cables for up to 24 modems and input cables from up to two telephone patch panels.

3−2.4.1.21 Dedicated Patch Panel (UD70A26, UD70A27). Each dedicated patch panel supports the testing of up to twelve, 4−wire leased telephone lines. The panels connect the dedicated adapter panel's port modems to the telephone lines via the telephone company's demarcation frame.

3−2.4.1.22 RMS Power Administrators (UD70A28 and UD70A29). FAA redundant systems have additional power administrators. This allows a selected device to be powered off and on remotely; thus, achieving a remote reset capability for the device. These two power administrators are controlled through the FAA RMS.

3−2.4.2 Remote BDDS Equipment (UD72, UD73, and UD74). The remote BDDS equipment is found within FAA and DoD systems. With the DoD and FAA sites, it is more appropriate to locate the BDDS equipment at a weather service forecast office (WSFO), instead of within the FAA and DoD RPGPCA. This is so that BDDS users can be easily connected to user interface equipment. These unique configuration items are necessary for a "Remote BDDS" and will consist of a:

- Remote BDDS processor with monitor, keyboard, and mouse (UD72)

- Remote LAN switch (UD73)
- Remote router (UD74)

3–2.4.2.1 Remote BDDS Processor (UD72A1). This remote BDDS processor is the same BDDS that would normally be found in an NWS RPGPCA discussed in paragraph 3–2.4.1.1, however the remote BDDS will be located outside of the RPGPCA, normally within the NWS building. DoD and FAA systems require a remote BDDS.

The remote BDDS equipment group will include a 17–inch monitor (UD72A2), a keyboard (UD72A3), and a mouse (UD72A4).

3–2.4.2.2 Remote LAN Switch (UD73). A second identical LAN switch is installed within the WSFO building. It is identical to the LAN switch discussed in paragraph 3–2.4.1.11. This LAN switch and the identical one in the DoD or FAA RPGPCA cabinet are physically connected within the same addressing domain and this LAN switch just provides an extension of the DoD or FAA RPGPCA LAN switch.

3–2.4.2.3 Remote Router (UD74A1). This router is similar to the RPGPCA router discussed in paragraph 3–2.4.1.2 and both make use of the optional CSU/DSU module. It is designed to provide external access into the RPG LAN switch. This remote router is used to provide an Ethernet T1 circuit out of the CSU/DSU module to the router (UD70A2) in the RPGPCA at the RDA/RPG shelter. The CSU/DSU module is located in both the router (UD70A2) in the RPGPCA and the remote router.

3–2.4.3 Relay Box (UD31). FAA redundant systems contain a relay box which consists of up to 60 relays that are used to switch narrowband communication lines from Channel 1 or Channel 2 to associated and non–associated users and other users. The relays are energized by control signals output from the DIO card of the product generation processor of each channel.

3–2.4.4 Remote RDA Maintenance Terminal (UD32). For NWS redundant systems, a remote RDA maintenance terminal provides the man–machine interface that allows the user to interact with the RDA processor operating system, application and maintenance programs, and the CDS.

The remote RDA maintenance terminal connects to the Channel 1 RDA (UD105) through a dial line. The terminal contains a dial port modem and STATMUX to transmit/receive and multiplex/demultiplex the application– and system–port lines of both Channels 1 and 2. It also contains a dual A/B switch used to select which channel is connected to the RRRAT monitor (UD32A10).

3–2.5 MSCF GROUP.

The MSCF equipment group consists of one equipment area. The functional interconnection of this equipment is discussed in paragraphs 3–2.5.1 through 3–2.5.1.4. Operational information about the application functionality/GUI interface for the MSCF can be found in NWS EHB 6–526 for operators, or NWS EHB 6–525 for maintenance technicians.

3–2.5.1 Master System Control Function (UD71). The MSCF is the man/machine interface that allows the operator and maintenance technician to interact with the RPG processor operating system,

application graphics, and maintenance programs. The applications functionality specifically designed to provide the graphical control interface to the RPG processor is called the HCI. The MSCF provides control over the RPG processing functions by permitting the selection of products to be routinely generated and a product subset to be archived. It also provides the interface to access the operating system, initializes the RPG processor, and performs first level analysis of system malfunctions. The router (UD70A2) in the RPGPCA cabinet is connected to the serial interface of the power administrator (UD70A10) and allows for an out–of–bandwidth serial link to the power administrator for performing power off/on resets.

3–2.5.1.1 MSCF Systems. Local or distant MSCFs are comprised of a processor (UD71A1), a 21–inch monitor (UD71A2), a keyboard (UD71A3), and a mouse (UD71A4). Also included is a backup storage device (UD71A6), a surge suppressor (UD71E1), and a color printer (UD79A1). Most distant MSCF groups will also contain a frame relay hub router (UD75A1). Both configurations are discussed in paragraphs 3–2.5.1.1.1 and 3–2.5.1.1.2.

3–2.5.1.1.1 Local MSCF. NWS sites have a local MSCF. The MSCF is located within the same building as the associated RPG and thus is referred to as a local MSCF. For NWS systems, the MSCF has a direct TCP/IP path to the RPG processor (through the Router). The local MSCF is collocated with the associated user that supports editing of the RCM function.

3–2.5.1.1.2 Distant MSCF. FAA and DoD systems have distant MSCFs. The distant MSCFs are located at a distance from the associated RPG, either at a NWS Weather Forecast Office or the local Weather Office Facility, and thus are referred to as a distant MSCF. Only a few DoD sites retain control of their MSCF, but it is still distant from the RPG, and is also referred to as a distant MSCF. The distant MSCF may be many miles from the RPG processor. Each distant MSCF has either a dedicated–port modem (UD71A5) or a frame relay hub router (UD75A1) link. The RPG and the distant MSCF transmit and receive transmissions via dedicated–port modems at both ends or through CSU/DSUs in the RPG router and the frame relay hub router.

3–2.5.1.2 Dedicated–Port Modem (UD71A5). The dedicated–port modem is a stand–alone version of the modem cards used in the dedicated–port modem rack (UD70A14). It performs the telephone–line to serial–digital data conversions at the distant MSCF. It is provided with distant MSCFs for DoD and FAA systems that do not utilize the frame relay hub router circuit.

3–2.5.1.3 Backup Storage Device (UD71A6). The backup storage device is directly connected to the MSCF processor (UD71A1). Its primary purpose is to provide the ability to backup system and application software at the MSCF.

3–2.5.1.4 Color Printer (UD79A1). The color printer is used to produce a hard copy of RPG data, including but not limited to, logs, status, and system information using the MSCF terminal suite.

3–2.5.1.5 Frame Relay Hub Router (UD75A1). The frame relay hub router is located at NWS Weather Service Forecast Offices that have distant MSCFs for DoD and FAA radars. The frame relay hub router provides WAN connectivity to the distant DoD and FAA RPG radars. This link utilizes CSU/DSU T1 modules in each router. The frame relay hub router can have up to four distant MSCFs and one distant MSCF printer connected to the Ethernet ports. In addition, the frame relay hub router also provides connectivity from the NWS RPG to AWIPS through a fast Ethernet link.

3–2.6 PUP GROUP.

The PUP equipment group consists of three (3) equipment items. The functions of this equipment are shown in Figure FO3–7 and described in paragraphs 3–2.6.1 through 3–2.6.3.

3–2.6.1 PUP Data Processor Cabinet (UD41). The PUP data processor cabinet contains the PUP display processor and associated data storage assemblies, graphics processor, and narrowband communication equipment.

3–2.6.1.1 Display Processor. The display processor receives the base and derived weather products from the RPG through the narrowband communication interface. The display processor sends requests, status, and control to the RPG. It formats the data and distributes it to data storage, Archive IV, and graphics processor. The processor provides a visual alert message and audible alert when required, sends status display information when requested, interfaces with the system console and application terminal, and responds to their action requests. The display processor consists of an M3200 processor assembly (A16) and a VME chassis (A7).

3–2.6.1.2 Narrowband Communication Equipment. The narrowband communications functions consist of full duplex modem based telephone links between the RPG and associated PUP, non–associated RPGs, and other users. The modems convert incoming TCM/QAM modulation data (audio tones) from the telephone lines into RS–232–C digital data which is presented to the PUP display processor, and the reverse process is used back to the RPG. When the PUP is associated with an RPG, a dedicated link (using leased lines) is provided to the associated remote RPG. When the RPG is collocated with the PUP, an RS–232–C/RS–422–A converter is used for the communication link, which usually operates at 56K bps. Leased lines may be used to connect the PUP with other facilities. Dial modems and telephone lines are used to communicate with non–associated RPGs.

3–2.6.1.3 PUP Data Processor Cabinet. The PUP data processor cabinet is comprised of two bays. The left bay may contain the converter/modem eliminator rack (A1), dedicated/dial port modem rack assembly (Codex 326X) (A2), dial–line telephone patch panel (A3), dial–line telephone patch panel (A25), VME chassis (A7), modem fan assembly (A10), high speed modem (A11), graphics processor (A13), power distribution panel (A20), I/O connector panel (A21), dial line telephone patch panel (A25), and power supply (PS2). The right bay can contain CPU fan (A8), SCSI assemblies (A15 and A22), M3200 processor assembly (A16), limited distance modem rack (A27), and swing–out power subsystem (PS1).

3–2.6.1.3.1 Converter/Modem Eliminator Rack (A1). The converter modem eliminator rack is used when the RPG and PUP are collocated, except in shelters. In this situation, the RPG and PUP can communicate without the use of telephone lines and modems, because they are a short distance away from each other. However, without telephone modems, the processor's RS–232 links can communicate at a rate of up to 56K Baud for only very short distances. To extend the 56K Baud rate over longer distances, the converter/modem eliminator rack assembly is used. It converts the RS–232 link to an RS–422 standard link, which has the ability to sustain a 56K Baud rate for a distance of up to 1200 meters. The RS–422 converter output is sent to another converter of the same type located in the collocated RPG processor/communication assembly cabinet. The converter rack assembly also contains a modem eliminator. This assembly is connected between the converter units to provide the protocols to deal with the synchronous link's clock signals.

3–2.6.1.3.2 Dedicated/Dial Port Modem Rack (Codex 326x) (A2). The dedicated/dial port modem rack can hold up to nine modem cards, which are a combination of Codex 3262 dial–port modem cards and Codex 3263 dedicated–port modem cards. The rack is configured to hold three dedicated port modem cards (A2A1 through A2A3) and two dial port modem cards (A2A4 and A2A5). Each dedicated port modem card is a synchronous, 4–wire, 14400–Baud modem used to connect a private (leased) telephone line to a PUP display processor narrowband communication port. The dedicated port modems support communication with associated RPG and dedicated other users. The modem

converts serial digital data into an analog signal which is then used to modulate a carrier signal so that data can be transmitted within the 300 to 3400 Hz frequency range of normal telephone lines. When receiving data, the modem reverses this process to produce a serial digital signal. Each dial port modem card contains two dual synchronous, 2−wire, 14400−Baud modems used to connect a public telephone line to a PUP display processor narrowband communication port. The dial port modems support communications with non−associated RPGs and other users. Each modem converts serial digital data into an analog signal which is then used to modulate an audio carrier signal for transmission over telephone lines. When receiving data, the modem reverses this process to produce serial digital data. Dial port modems initiate outgoing calls with an internal ACU.

3−2.6.1.3.3 Dedicated Port Modem Rack (Fujitsu M1921L) (A2). A dedicated port modem rack can hold up to 12 Fujitsu M1921L dedicated−port modem cards. These modems are only used in some configurations. They operate in the same manner as the Codex 3263 dedicated port modems described previously.

3−2.6.1.3.4 Dial Port Modem Rack (Codex 2264) (A6). A dial port modem rack can hold up to eight Codex 2264 dial−port modem cards. This rack is only used in some configurations. The Codex 2264 dial−port modem cards contain an internal ACU and operate in the same manner as the Codex 3262 dial−port modem cards described previously.

3−2.6.1.3.5 Dial Patch Panel (A3). The dial−line telephone patch panel supports the testing of up to sixteen, 2−wire dial lines. The panel connects the dial−port modems, via the ACU, telephone adapter panel, and telephone company's demarcation frame to the public telephone switched network.

3−2.6.1.3.6 Dial Adapter Panel (A4). The telephone adapter panel (A4) assembly is used to connect the dial−port modems to the dial−line telephone patch panel. It provides a cable transition between the output cables from each of up to 16 modems and the single input cable to the telephone patch panel.

3−2.6.1.3.7 Dedicated Adapter Panel (A6). The telephone adapter panel (A6) assembly is used to connect the dedicated port modems to the leased−line telephone patch panel. It provides a cable transition between the output cables from each of the modems (up to 12 modems) and the single input cable to the telephone patch panel. The telephone adapter panel (A6) is not used with Fujitsu M1921L modems housed in the dedicated−port modem rack (A2). The Fujitsu modems connect directly into patch panel A25.

3−2.6.1.3.8 Graphics Processor (A13). The graphics processor receives product inputs from the display processor, formats the data, and writes them into graphics memory. It converts the formatted product data to video signals, which are sent to the color monitors. When requested, the product data is sent to the graphics printer. The graphics processor sends status requests to the display processor. It receives and responds to the graphics tablet control requests.

3−2.6.1.3.9 SCSI Assembly (A15). The SCSI assembly consists of a 600 MB magnetic disk drive unit for mass storage of fixed data and operational programs; a 150 MB, 1/4−inch streaming tape drive unit which accepts cartridge−mounted tapes used for initial program loading (M3200 operating system, and application programs) updating, training scenarios and special diagnostic (display processor and graphic processor) programs and a 654 MB optical disk drive which provides the PUP

Archive IV capability for permanent recording of up to 168 hours of continuous display. The optical disk is also cartridge mounted, and can be replaced without the loss of any archive designated product records.

3–2.6.1.3.10 M3200 Processor (A16). The M3200 processor assembly (A16) contains the CPU (M3200), RAM (with expansion capability), timing, and peripheral (graphics processor, VME narrowband communication, and data storage assembly) interface cards of the display processor.

3–2.6.1.3.11 SCSI Assembly (A22). The SCSI assembly is added as an option and it consists of a 600 MB magnetic disk drive unit to provide additional secondary data storage capability.

3–2.6.1.3.12 VME Chassis (A7). The VME chassis contains the industry–standard VMEbus, which interfaces the M3200 processor with narrowband communications. The VME chassis contains a VCI–V board, which connects via a cable bus to a VCI–C board housed in M3200 processor chassis A16. The VCI–C board ties directly into the processor's memory via the MUX and DMA buses. The VCI–V board connects through the VMEbus to narrowband interface boards also housed in the VME chassis. The narrowband boards provide RS–232 ports for transmission and reception of data to the RPG via the narrowband communications function.

3–2.6.1.3.13 Dedicated Patch Panel (A25). The leased–line patch panel supports the testing of up to twelve, 4–wire leased lines. The panel connects the dedicated port modems to the telephone lines via the telephone adapter panel and the telephone company's demarcation frame. Chassis A16 contains the CPU M3200, RAM (with expansion capability), timing, and peripheral (graphics processor and data storage assembly) interface cards. Chassis A17 contains the control and interface cards (with expansion capability) for the narrowband communications links.

3–2.6.1.3.14 Limited Distance Modem Rack (A27). The limited distance modem rack is contained in PUP cabinets that are separated from a PUP workstation by a distance greater than 100 ft. Each rack contains three LDMs, (A27A1 through A27A3). These LDMs work in tandem with a similar set of stand–alone LDMs at the workstation, (UD45A3, A4, and A5), to provide communications between the graphics and display processors of the PUP and the application terminal (UD43) and the graphics tablet (UD44) at the workstation.

3–2.6.1.3.15 Parallel Line Extender (A28). The parallel line extender is contained in PUP cabinets that are separated from a PUP workstation by a distance greater than 100 ft. It drives product graphic display information from the graphics processor to the color graphics printer (UD47).

3–2.6.1.3.16 Power Supply Subsystem. The power supply subsystem for the PUP data processor cabinet consists of the swing–out power supply (SOPS) (PS1), power supply (PS2), and filter (FL1).

3–2.6.1.3.16.1 SOPS (PS1). The SOPS provides +5 Vdc power for the display processor. It contains a battery pack and battery charger circuit, to provide short term backup power to the processor memory in the event of a primary power failure.

3–2.6.1.3.16.2 Power Supply (PS2). The power supply (PS2) provides DC power for the modem eliminator converter rack (A1).

3–2.6.1.3.16.3 Filter (FL1). The filter (FL1) provides transient–surge and interference protection of the primary power input.

3−2.6.2 PUP Workstation. The PUP workstation is an operational position for the WSR−88D. The workstation is a table structure with operator workspace and support provisions for color graphics display, application terminal, graphics tablet, audible alarm, and GFE telephone/intercom. A separate support for the color graphics printer is also provided. There are two versions of the PUP workstation. The first is known as the normal workstation which uses the color graphics display (UD45A1−A2) (dual display). The second is known as the PUP workstation extension, which consists of the same equipment as the normal workstation with the addition of three LDMs (UD45A3−A5) and two RGBSs (UD48 and UD51). This additional equipment is used when the distance between the PUP cabinets and the PUP workstation is greater than 100 ft. The workstation equipment can include seven items which are discussed in the following paragraphs.

3−2.6.2.1 Application Terminal (UD43). The application terminal is an alphanumeric terminal consisting of a keyboard and CRT display. (It is identical to system console UD42.) It has the capability to communicate with two RS−232 ports. The operator has the ability to alternately display and interface with either of these ports. One port is connected to the graphics processor to enable the operator to load and monitor graphics processor diagnostics. The other port is connected to the display processor and provides the main WSR−88D operator interface, via the PUP application program. When connected to the display processor, the application terminal is menu driven for control of the application software. It allows the operator to perform interfacing functions. It can request control of the display processor for entries and status requests, including:

- Requests to change adaptation parameters
- Playback of desired archived products
- Routine and/or one time requests of base, derived, and alphanumeric products
- Requests for status messages and data
- Product requests
- Deselection of annotation data provided with products

On−line status monitoring is displayed as messages on the application terminal display. A visual alert is displayed on the screen of the terminal.

3−2.6.2.2 Graphics Tablet (UD44). The graphics tablet is an 18 X 18−inch electromagnetic induction tablet, equipped with a puck (mouse). The tablet's 15 X 15−inch active area definition is under software control by the graphics processor. It uses the mouse to send control requests to the graphics processor, by converting the position of the mouse into digital format. The graphics tablet provides the operator with the capability to select display functions, product overlays, maps, products, and parameters as well as color monitor cursor control, special character and symbol selection, and graphics annotation/editing.

3−2.6.2.3 Color Graphics Display (UD45A1, and A2). The color graphics display assembly consists of two 19−inch color monitors (A1 and A2). It may also consist of three LDMs (A3, A4 and A5) which are included when the PUP workstation is separated from the PUP cabinet for a distance greater than 100 ft. The two monitors are used for display of routine/selected weather products. Each monitor may display either one or four color images. Each monitor is driven by a

color channel (three colors and syncs) generated by the graphics processor. The enclosure mounting for the two color monitors permits the monitors to be swiveled about the horizontal axis and positioned at a variable vertical tilt angle.

3–2.6.2.4 Limited Distance Modems (UD45A3–A5). The limited distance modems (UD45A3, A4 and A5) are part of the PUP workstation when it is separated from the PUP display processor cabinet by more than 100 ft. These modems communicate and pass data to the LDM rack (UD41A27) to provide the interface between the PUP applications terminal (UD45), the PUP systems terminal (UD42) and the PUP processor (UD41A16). LDMs (A3 and A4) connect the applications and diagnostic ports of applications terminal (UD43) to the PUP cabinet via LDMs UD41A27A1 and A2. LDM (A5) connects graphics tablet (UD44) to the PUP cabinet via LDM UD41A27A3.

3–2.6.2.5 Audible Alarm (UD46). The audible alarm consists of a volume adjustable tone generator and audio transducer. It provides an audible alert for specific designated weather products to the workstation operator when the selected products surpass their alert threshold. The audible alarm is driven by the display processor. The audible alarm will also sound with the arrival of a free text message from the RPG.

3–2.6.2.6 Color Graphics Printer (UD47). The color graphics printer receives output signals from the graphics processor and provides a color graphics hardcopy of the designated product or a six intensity level monochromatic hardcopy. It receives commands from, and sends status to, the graphics processor. It is a thermal–wax transfer printer, which makes copies by sequentially transferring primary color images to the paper. The images are formed by melting dots of colored wax onto the paper. The front panel contains switches for the control of various printing options, including saving current display in memory and reprinting. The front panel also contains a status message display.

3–2.6.2.7 RGBS Line Drivers/Equalizers (UD48/UD51). The RGBS line drivers/equalizers are located at the PUP workstation and are provided for configurations where the cables between the graphics processor (UD41), and the two graphics display assemblies (UD45A1 and A2) extend beyond 100 ft. RGBS line driver/equalizer (UD48) amplifies the three signals, red, green and blue sent from the processor to the color graphics display assembly (UD45A1). The RGBS line driver/equalizer (UD51) amplifies the three signals sent from the processor to the color graphics display assembly (UD45A2).

3–2.6.3 System Console (UD42). The system console is an alphanumeric terminal consisting of a keyboard and CRT display. (It is identical to application terminal UD43.) It has the capability to communicate with two RS–232 ports. The operator has the ability to alternately display and interface with either of these ports. It is normally connected only to a single display processor port. The system console provides the necessary instructions for the display processor initialization, loading the 1/4–inch streaming tape containing display processor programs/diagnostics onto the fixed disks, and performing display processor diagnostics. It provides for continuous monitoring of the display processor's operating system. At certain sites, the second port is connected to the RPG to provide a maintenance terminal function.

3–2.7 RPIE GROUP.

The RPIE encompasses the physical structures that shelter or support the WSR–88D functional equipment, and the auxiliary systems that support the structures. The physical structures consist of the following:

- Radar equipment shelter assembly (UD1)
- MLOS shelter assembly (UD8)
- Generator shelter (UD10)
- Radar tower (UD11) and radome (UD12)
- RDA MLOS tower (UD20)
- RPG MLOS tower (UD40)
- Transition power maintenance shelter (UD60)
- Transition power source (UD62)

The auxiliary systems are functionally subdivided into the following:

- Power distribution and lighting
- Heating, ventilating, and air conditioning
- Fire detection and suppression
- Security and status monitoring

These functions of the RPIE structures are discussed in paragraphs 3–2.7.1 through 3–2.7.10.

3–2.7.1 Radar Equipment Shelter Assembly (UD1). Assembly UD1 consists of the RDA/RPG primary equipment and radar equipment shelter (UD7) in which they are housed. Shelter UD7 consists of the shelter structure and its auxiliary equipment. The UD7 Shelter (Figure 1–4) houses the RDA, RDA/RPG, or redundant RDA/RPG. The shelter size varies to accommodate this equipment:

Equipment Complement	Nominal Shelter Size
RDA/RPG	10′ X 24′
Redundant RDA/RPG	20′ X 24′

In addition to the auxiliary equipment described in paragraphs 3–2.7.1.1 through 3–2.7.1.4, each shelter has a ceiling fixture to which a portable hoist can be attached to lift the transmitter Klystron assembly. See Figure 1–4, sheets 1 through 4.

3–2.7.1.1 Power Distribution and Lighting. The RDA equipment shelter receives 3–phase power from the generator shelter. This power is controlled by the main power distribution panel (UD7A2) and secondary power distribution panel (UD7A3), the surge protector (UD7A11), and the contactor (UD7S6).

FAA redundant systems contain a main power distribution panel (UD7A2) and two secondary power distribution (critical power) panels (UD7A3 and UD7A29).

NWS redundant systems contain a main power distribution panel (UD7A2) and three secondary power distribution panels (UD7A3, UD7A29, and UD7A30).

3–2.7.1.1.1 Main Power Distribution Panel (UD7A2). The main power distribution panel (PDP) receives 3–phase power from the auto–transfer switch in the generator shelter. The main PDP then distributes the power to the radar tower and radome (lights, heaters, vent system, and aircraft warning lights), the shelter's environmental control units, lights, fire detection system, transmitter vent system, and to the secondary PDP UD7A3 (applies only to NWS/DoD sites without a TPS). At sites with a TPS, the main PDP distributes 3–phase power to the TPMS system power distribution panel. The main PDP is also used to distribute power to site dependent functions such as a snow shelter (NWS mountain top redundant), remote monitoring system (FAA), and a storage shelter (FAA). A remote trip circuit is used to interrupt power to the circuit breakers within the main PDP in the event of fire or smoke within the shelter. This remote trip circuit is controlled by the fire detection system. The main PDP at Medford, OR, and Missoula, MT, is quite different from the standard main PDP UD7A2 and is used to distribute power to power panels B, C, and D, the shelter's air handler units, motor operated dampers, exhaust dampers, and the TPS. Power Panels B, C, and D further distribute power to the non–critical NEXRAD and other equipment throughout the site. A 225 amp triple–pole breaker in the Medford and Missoula main PDP is used to control power sent to the TPS unit, much in the same way as the TPS fused disconnect (UD10TPS1) in the generator shelter at other NWS and DoD sites. This breaker is normally closed except when maintenance is required to be performed on the TPS input and bypass fused disconnects in the TPMS.

3–2.7.1.1.2 Secondary Power Distribution Panels (UD7A3, UD7A29, and UD7A30). The number of secondary power distribution panel(s) can be from one to three depending on the site configuration and agency. The following list provides a brief overview of the number of panels:

- Single channel systems (DoD and NWS) have one secondary PDP, UD7A3.
- FAA redundant systems have two secondary PDPs, UD7A3 and UD7A29. The FAA also refers to these panels as critical power panels, CP–1 and CP–2.
- NWS redundant systems utilize all three secondary PDPs, UD7A3, UD7A29, and UD7A30.

The primary function of the secondary PDP(s) is to distribute power to the RDA/RPG equipment within the shelter, to the antenna/pedestal, and to the MLOS shelter, if one if used at the site. The source of power to the secondary PDP, again, varies by configuration and agency. At sites without a TPS, the power input is distributed from the main PDP UD7A2. Although this power is backed up by the generator, it is interruptible during the transition from commercial to generator. At sites with uninterruptible power sources, (NWS and DoD sites use the transition power source (TPS) which utilizes a static battery bank and DC–to–AC inverter to provide a "ride–through" of approximately nine minutes (varies by load and battery life) and FAA sites use a Roesel Motor Generator (RMG) which uses a high–speed rotary system and stator windings to provide a "ride–through" of approximately 20 seconds) the distribution of this critical power to the secondary PDP(s) is also

varied by site configuration and agency. The following list provides a brief overview of the critical power distribution from the TPS/RMG to the secondary PDPs:

- Single channel systems: TPS output through the TPS output disconnect UD61A5S3 (TPMS Types 1 through 4) or maintenance bypass module unit output breaker (UOB) UD64CB3 (TPMS Types 5 through 9) to the contactor UD7S6, then on to the secondary PDP
- FAA redundant systems: RMG output to the UPS maintenance bypass module switch #3 to the contactors UD7S6 and UD7S36, then on to secondary PDPs UD7A3 and UD7A29, respectively
- NWS redundant systems: TPS output through the TPS output disconnect UD61A5S3 (TPMS Type 3) or maintenance bypass module unit output breaker (UOB) UD64CB3 (TPMS Types 7 and 8) to the critical equipment contactor−distribution panel (CEC−DP) UD7TPS2, circuit breakers CB1 through CB3, to contactors UD7S6, UD7S36, and UD7S37, then on to the secondary PDPs, UD7A3, UD7A29, and UD7A30 respectively

3−2.7.1.1.3 Surge Protectors (UD7A11, UD7A68, and UD7A69). The surge protectors are connected to the input power bus within each secondary power distribution panel UD7A3, UD7A29, and UD7A30 respectively. They function to suppress transient voltage excursions.

3−2.7.1.1.4 Contactor (UD7S6, UD7S36, and UD7S37). The number of contactors can be from one to three depending on the site configuration and agency. The following list provides a brief overview of the number of panels:

- Single channel systems (DoD and NWS) have one contactor, UD7S6
- FAA redundant systems have two contactors, UD7S6 and UD7S36
- NWS redundant systems utilize all three contactors, UD7S6, UD7S36, and UD7S37

The contactor is used to interrupt power to the secondary power distribution panel(s) (PDP) (see paragraph 3−2.7.1.1.2) if the utility or generator power is bad. The contactor is controlled by a power good relay and time delay relay located in the auto−transfer switch. Once the auto−transfer switch determines the power, either utility or generator, is good, the good power circuit relay closes and initiates a good power signal to the time delay relay so it may begin a 6−second time delay to allow components in the RDA to properly shutdown (i.e., the RDA processor) after which a neutral is sent to one side of the contactor coil. The other side of the coil is 120 Vac and is provided by various sources depending on agency and whether a TPS/RMG is installed. At NWS and DoD single channel sites, contactor UD7S6 and at FAA redundant sites, both contactors UD7S6 and UD7S36 are controlled by the power good relay and time delay relay. At NWS redundant sites, only contactor #3 UD7S37, which supplies power to secondary PDP #3, is controlled by the power good relay and time−delay relay, while contactors UD7S6 and UD7S36 coils receive control power from the RDA data processors which are powered from secondary PDP #3 (See NWS EHB 6−553, Section 1).

The input, three−phase power to the contactor(s) is dependent on site configuration, agency, and whether a TPS/RMG is installed. The following list provides a brief description:

- At sites without a TPS system, the contactor receives three–phase power and the coil control voltage from the main PDP UD7A2.
- At NWS and DoD single channel sites with a TPS, the contactor will receive three–phase power directly from the TPS (UD62) output via either the TPS output disconnect UD61A5S3 (TPMS Types 1, 2, and 4) or from TPS maintenance bypass module circuit breaker UD64CB3 (TPMS Types 5, 6, and 9). The contactor coil control voltage is tapped off phase–A and routed through the critical equipment contactor coil control box UD7TPS1.
- At FAA redundant sites, the RMG output is routed through the UPS maintenance bypass module switch #3, and sent to the contactors. The coil control voltage is supplied by the main PDP UD7A2.
- At NWS redundant sites, the input power for each of the three contactors is from a distribution power panel which is supplied by the TPS. At TPMS Type 7 and TPS only sites, the critical equipment contactor–distribution panel (CEC–DP) UD7TPS2 100 amp circuit breakers CB1 through CB3 control the three–phase power to each of the contactors #1 UD7S6, #2 UD7S36, and #3 UD7S37, respectively. The coil control voltage for contactor #3 is controlled by CB4. At TPMS Type 3 sites (Missoula, MT, and Medford, OR), power from the TPS is fed to power panel C or D, respectively, which, in turn, supplies power to each contactor via a 100 amp circuit breaker.

3–2.7.1.1.5 Critical Equipment Contactor (CEC) Coil Control Box (UD7TPS1). The CEC coil control box contains a single pole 15 amp circuit breaker that provides single phase power from the line side (TPS side) of contactor UD7S6 through the normally closed contacts of auxiliary relay K5 in the fire detection panel to control the coil of the contactor. This component is only installed at NWS and DoD single channel sites having a transition power source. This breaker provides a means to isolate power to the contactor UD7S6 and secondary power distribution panel UD7A3 should maintenance be required.

3–2.7.1.1.6 Critical Equipment Contactor–Distribution Panel (CEC–DP) (UD7TPS2). The CEC–DP contains a single pole 15 amp circuit breaker that provides single phase power from the line side (TPS side) of contactor #3 UD7S37 through the normally closed contacts of auxiliary relay K5 in the fire detection panel to control the coil of the contactor. Also, three 100 amp circuit breakers provide three–phase power from the TPS to the three secondary power distribution panels UD7A3, UD7A29, and UD7A30 via the contactors. This panel also contains other breakers for other site equipment requiring critical, uninterruptible power such as the NOAA weather radio, fire detection panel, and hydrogen detector. This CEC–DP is installed at NWS redundant sites with a TPMS Type 7 or TPS only system.

3–2.7.1.1.7 Power Panel C (Missoula, MT) and Power Panel D (Medford, OR). Power panel C or D contains a single pole 15 amp circuit breaker that provides single phase power from the line side (TPS side) of contactor #3 UD7S37 to control the coil of the contactor. Also, three 100 amp circuit breakers provide three–phase power from the TPS to the three secondary power distribution panels UD7A3, UD7A29, and UD7A30 via the contactors. This panel also contains other breakers for other site equipment requiring critical, uninterruptible power such as the NOAA weather radio.

3–2.7.1.2 Heating, Ventilating, and Air Conditioning. Shelter temperature monitoring and regulation is provided by air conditioners (UD7AC1 and UD7AC2), exterior and interior temperature sensors (UD7A22 and UD7A20), and transmitter duct intake and exhaust dampers (UD7A9 and UD7A10).

In redundant systems, exterior and interior temperature sensors (UD7A50 and UD7A52) are also provided.

3–2.7.1.2.1 Air Conditioners (UD7AC1 and UD7AC2). These air conditioners are 5–ton units which contain heaters and exhaust dampers. Automatic change–over thermostats control each air conditioner in the heating, ventilating, or mechanical cooling mode to maintain a set room temperature. The air conditioners report status and output duct temperatures to the alarm termination panel.

3–2.7.1.2.2 Temperature Sensors (UD7A22, UD7A20, UD7A50, and UD7A52). The exterior and interior temperature sensors (UD7A22, UD7A20, UD7A50, and UD7A52), respectively, provide analog temperature data to the alarm termination panel.

3–2.7.1.2.3 Transmitter Duct Dampers (UD7A9 and UD7A10). The transmitter duct intake and exhaust dampers (UD7A9 and UD7A10), respectively, provide backup cooling for the transmitter. If the setting of transmitter vent cooling thermostat (UD7S5) is reached, motor controls are energized to open dampers (UD7A9 and UD7A10), allowing outside cooling air to pass through the transmitter and exhaust to the outside. The transmitter's internal cooling fan provides the air thrust.

3–2.7.1.3 Fire Detection and Suppression. The UD7 shelter is provided with a fire detection system. There are two methods of activating the fire detection system which are described in the following paragraphs. A portable fire extinguisher is located within the shelter for manual fire suppression.

3–2.7.1.3.1 Photoelectric and Ionization Smoke Detection. When the photoelectric smoke detector (UD7A17 and UD7A47) or ionization smoke detector (UD7A23 and UD7A53) senses smoke or fire, a system alarm is triggered. The alarm horn (UD7A4) sounds and the exterior alarm strobe light (DS1) flashes. At the same time, the fire detection panel (UD7A5) closes K4 which sends the shunt trip signal to the main PDP (UD7A2) and trips the main panel circuit breaker. Also, K5 opens removing the 120 Vac contactor (UD7S6) coil control voltage which opens the contactor and removes all power from the secondary PDP (UD7A3). The automatic Halon discharge tank has been removed from all shelters.

3–2.7.1.3.2 Manual Discharge Station Switch. Pressing a switch at the manual discharge station (UD7A6) energizes the alarm horn. The Halon fire suppression tank originally installed in the shelter has been removed.

3–2.7.1.3.3 Manual Abort Station Switch. A switch at the manual abort station (UD7A7), when pressed, stops the predischarge timer from cycling down to initiate the actuator output. A master reset switch on the fire control panel, when pressed, resets all alarm and trouble conditions. The fire detection panel and smoke detectors send status data to the status monitoring function (paragraph 3–2.7.1.4).

3–2.7.1.4 Security and Status Monitoring. The alarm termination panel (UD7A1) collects the following information:

- Shelter internal/external temperature, site unauthorized entry alarm, fire detection system status, air conditioner status, and smoke detector fire alarm data
- Air conditioner exhaust temperature and clogged filter sensor data
- Transmitter clogged filter sensor and exhaust duct air temperature data
- Waveguide circulator temperature and pressurization unit fault data
- Radome hatch status and temperature data
- Tower gate status data

This data is sent to the DAU (paragraph 3–2.2.5.4), which also receives status/alarm data directly from the generator shelter. The alarm termination panel also routes tower gate status data to the security panel.

3–2.7.1.4.1 Security Panel (UD7A12). The security panel (UD7A12) receives a door status signal from the door security contact (UD7S1). It also receives door status signals from the tower (via the alarm termination panel) and from the generator shelter (via the DAU) and transition power maintenance shelter (via the alarm termination panel). If any door is opened, the security panel generates an unauthorized entry alarm which is sent to the DAU via the alarm termination panel. The security panel is activated/deactivated by use of the alarm key switch (UD7S7), which is located on the shelter exterior, adjacent to the door. The security panel generates a security equipment status signal which indicates whether the security panel has been activated/deactivated. This signal is also sent to the DAU via the alarm termination panel.

3–2.7.2 MLOS Shelter Assembly (UD8). Assembly UD8 consists of the MLOS radio cabinet and the MLOS shelter (UD13) in which is it housed. Shelter UD13 consists of the 8 X 8–foot shelter structure (Figure 1–6) and its auxiliary equipment. The shelter's auxiliary functions are described in paragraphs 3–2.7.2.1 through 3–2.7.2.4. See Figure FO3–9.

3–2.7.2.1 Power Distribution and Lighting. The power distribution panel (UD13A1) receives power via the radar equipment shelter. It distributes power to the MLOS radio cabinet tower aircraft warnings lights, shelter fan, dampers, heater, and interior and exterior lighting.

3–2.7.2.2 Heating, Ventilating, and Air Conditioning. The shelter is not air conditioned. However, temperatures are regulated by ventilating and heating.

3–2.7.2.2.1 Ventilating. When the shelter's interior temperature rises to a preset value, the ventilating thermostat (UD13S1), activates motorized intake and exhaust dampers (UD13A3 and UD13A6) and the exhaust fan (UD13B1). The exhaust fan is capable of maintaining the shelter within a specified temperature range.

3–2.7.2.2.2 Heating. When the shelter's interior temperature falls to a preset value, a thermostat (UD13S2) activates and cycles a heater (UD13HR1) to maintain the shelter temperature within the specified range.

3–2.7.2.3 Fire Detection and Suppression. The ionization smoke detector (UD13A4), upon activation, sends a fire alarm signal to the alarm terminal panel. In addition, a manually–activated portable fire extinguisher (UD13A5) is located near the shelter door.

3–2.7.2.4 Security and Status Monitoring. The shelter door is equipped with a door security contact switch (UD13S3) which sends a status signal to an alarm termination panel (UD13A2). The alarm termination panel routes the doors' status and fire alarm signals to the remote station in the MLOS radio cabinet.

3–2.7.3 Generator Shelter (UD10). The 10 X 16 foot generator shelter (Figure 1–3) houses a diesel generator to supply backup power, a transfer switch to monitor and select commercial or backup power, and power distribution panels. The shelter is the source of primary power distribution for the following:

- Radar equipment shelter
- Radar tower and radome
- RDA MLOS shelter and RDA MLOS tower
- Transition power source (NWS and DoD sites)

The four equipment functions are discussed in paragraphs 3–2.7.1.1 through 3–2.7.1.4. See Figure FO3–10.

3–2.7.3.1 Power Distribution and Lighting. The power distribution equipment consists of a diesel motor generator (UD10M1/G1), a fuel tank (UD10A6), a utility power disconnect switch (UD10S1), an auto–transfer switch (UD10A1), and a power distribution panel (UD10A2).

3–2.7.3.1.1 Auto–Transfer Switch (UD10A1). The auto–transfer switch (UD10A1) connects the RDA main power distribution panel, the TPS, and the engine generator shelter distribution panel to either utility power or the diesel generator. Three–phase commercial power is the normal power source. However, in the event of interruption of commercial power, the auto–transfer switch starts the diesel generator and selects its output for distribution to the system. Additionally, with the TPS installed, the auto–transfer switch sends a signal to the transition power source control circuitry to automatically adjust the TPS voltage regulation and frequency sensing to compensate for the diesel generator output. The TPS provides for continuity of power to the critical RDA loads until the diesel generator output is switched on–line by the auto–transfer switch. The auto–transfer switch contains power and voltage sensing circuits which are used to control the automatic load switching. These sensing circuits report switch status to the status monitoring function (paragraph 3–2.7.3.4), and accept remote switch control commands. The auto–transfer switch also contains a battery charger which is used to maintain the charge on the generator's batteries, and an exerciser clock which starts and runs the generator for a half hour each week to check readiness and to maintain lubrication. The auto–transfer switch distributes three–phase power to the radar equipment shelter, the transition power source (when installed), and two phase power to the power distribution panel (UD10A2).

3–2.7.3.1.2 Power Distribution Panel (UD10A2). The power distribution panel (UD10A2) routes two–phase power to the shelter fan, dampers, heater, battery charger, water jacket heater, outlets, and interior/exterior lights.

3–2.7.3.1.3 Fuel Tank (UD10A6). The fuel tank (UD10A6) may be a single tank or two tanks interconnected to operate as a single tank. The tank(s) is located within the shelter, and has a storage

capacity of at least 450 gallons of No. 2 diesel fuel. The vents and lockable fuel fill cap are located outside the shelter. An analog fuel gauge sensor is provided to measure and report the fuel level in the tank.

3–2.7.3.1.4 Diesel Motor Generator (UD10M1/G1). The diesel generator (UD10G1) delivers 3–phase, 60–Hz power. It has a capacity of 80 kW. Exhaust gases are muffled and vented externally. In operation, the coolant temperature is maintained by a fan cooled radiator. A water jacket heater maintains a minimum coolant temperature when the generator is not in use to assure rapid, reliable starting. The Onan generator contains two 12–volt batteries that provide a 24 volt starting voltage. The Kohler generator utilizes a single 12–volt battery for starting voltage. The generator is connected for remote starting via the auto–transfer switch, but contains a control panel for local control and monitoring. The control panel sends a status signal to the status monitoring function. The generator output is connected to the auto–transfer switch. Single channel sites utilize 80 kW generators whereas redundant sites use 100 kW generators for the additional load.

3–2.7.3.1.5 Utility Power Disconnect Switch (UD10S1). The utility power disconnect switch (UD10S1) receives three–phase commercial power. It contains a 225 amp three–phase circuit breaker which can be used to remove commercial power from the site during maintenance. When the switch is closed, commercial power is applied to the auto–transfer switch. This disconnect switch is used at NWS and DoD single channel sites.

At most NWS redundant sites, the main site utility power disconnect switch is mounted at a power distribution rack outside the generator shelter. The 300 amp (350 amp at Medford, OR, and Missoula, MT) fused single–throw triple–pole switch can be used to remove commercial power from the site during maintenance.

At FAA redundant sites, the main site utility power disconnect switch is mounted in the UPS/Generator module. The main module disconnect contains a 400 amp fused single–throw triple–pole switch that can be used to remove commercial power from the site during maintenance.

3–2.7.3.1.6 TPS Disconnect Switch (10TPS1). The TPS disconnect switch is only installed at NEXRAD sites having a TPS (EXCEPT Medford, OR, and Missoula, MT). It receives three–phase power from the auto–transfer switch and is normally closed. This switch is only opened when power must be isolated from the entire site critical bus. With this switch open there is not a path to energize the site critical systems once the TPS batteries have been discharged. Its primary purpose is to allow isolation of the TPS input breaker/fused disconnect or the maintenance bypass breaker/fused disconnect.

3–2.7.3.1.7 RDA Main Power Distribution Panel Disconnect. At NWS redundant sites (except Medford, OR, and Missoula, MT) a 225 amp circuit breaker disconnect is installed on the auto–transfer switch UD10A1 and can be used to remove either utility or generator, non–critical power from the main power distribution panel (UD7A2) in the RDA shelter during maintenance on the main PDP without removing power from the critical power circuits. When this breaker is closed, utility or generator power is applied to the main PDP.

3–2.7.3.1.8 Surge Protector (UD10A20). The surge protector is connected to the commercial input power bus of the utility power disconnect switch (UD10S1). It functions to suppress transient voltage excursions on the power before it reaches the auto–transfer switch. At NWS redundant sites

(except Medford, OR, and Missoula, MT, where it is mounted inside the generator room), the surge protector is mounted next to the utility power disconnect located outside the generator shelter.

3–2.7.3.2 Heating, Ventilating, and Air Conditioning. The generator shelter is not air conditioned. When the generator is not running, the shelter is maintained within the desired temperature range by a thermostatically–controlled exhaust fan/damper or by a 3.5 kW heater (UD10HR1). When thermostat UD10S2 orders ventilation, power is applied to the exhaust fan/damper and to intake damper No. 1. When the generator starts, power is removed from the fan and heater, and motorized, intake dampers No. 1 (UD10A4) and No. 2 (UD10A5) are energized to provide generator combustion and cooling air, and exhaust damper UD10A3 is energized to vent the generator's radiator fan. The interior temperature sensor (UD10A7) reports internal shelter temperature to the status monitoring function (paragraph 3–2.7.3.4).

3–2.7.3.3 Fire Detection and Suppression. Fire detection in the generator shelter is provided by a thermal fire detector (UD10A8), which reports to the status monitoring function (paragraph 3–2.7.3.4). Fire suppression is provided by a manually activated, portable fire extinguisher (UD10A10) which is located near the shelter door.

3–2.7.3.4 Security and Status Monitoring. The shelter is equipped with a door security switch (UD10S3) which sends a signal to an alarm termination panel (UD10A9) if the door is opened. The alarm termination panel (UD10A9) accepts the following: generator status, fire alarm, fuel level, shelter temperature, power levels, voltage levels, auto–transfer switch status, and door status signals. The alarm termination panel forwards these status and alarm signals to the data acquisition unit in the RDA.

3–2.7.4 Radar Tower (UD11) and Radome (UD12). The radar tower is constructed of braced steel beams. It is composed of 22–foot square by 5–meter high sections. The overall tower height can vary from 5 to 30 meters in 5 meter increments. The radome is a rigid, truncated sphere with a nominal outside diameter of 39 ft. and height of 35 ft. It is constructed of fiberglass panels. The panels are shaped such that the panel joints have a non–repetitive pattern, to avoid disturbing the radiation field. The radome is provided with lightning protection. The auxiliary equipment is discussed in paragraphs 3–2.7.4.1 through 3–2.7.4.4. See Figure FO3–11.

3–2.7.4.1 Power Distribution and Lighting. Power for the tower and radome auxiliary equipment is received from the main power distribution panel in the radar equipment shelter. The tower stairs and radome interior are provided with manually switched lighting. The aircraft warning lights are mounted at the apex of the radome (site option). They are controlled by a circuit breaker located in the radar equipment shelter's main power distribution panel and are serviced from inside the radome.

3–2.7.4.2 Heating, Ventilating, and Air Conditioning. The radome is not air conditioned; however, heating and ventilating are provided.

3–2.7.4.2.1 Radome Heating. Radome heating uses optional 10 kW heater(s) to perform the heating function. The radome heaters are thermostatically–controlled and are provided for technician comfort during maintenence on the pedestal in cold weather. The heaters are not provided for the purpose of equipment stability. Each radome heater receives power from the radar equipment shelter's main power distribution panel and is routed through a disconnect

switch in the radome. The number of radome heaters is site dependent and can range from none to three. Each heater is mounted to the pedestal and radiates heat away from the pedestal.

3–2.7.4.2.2 Radome Ventilating. Radome ventilating uses a ventilation fan (UD11A2), a motorized damper (UD11A1), and a thermostat (UD2S2). When the temperature reaches 25 °C, the thermostat sends a signal to the ventilation fan and the motorized damper which turns on the fan and causes the damper to open. The fan is located under the right radome floor grille while the motorized damper is located under the left radome floor grille. The airflow maintains the radome temperature to not more than 5 °C above the exterior temperature when the outside air temperature is above 25 °C.

3–2.7.4.2.3 Radome Temperature Sensor. A radome temperature sensor (UD2A10/A12) provides an analog temperature measurement to the alarm termination panel in the radar equipment shelter.

3–2.7.4.3 Fire Detection and Suppression. No fire detection or suppression capability is provided for the radome.

3–2.7.4.4 Security and Status Monitoring. The tower entry gate and the radome hatch are equipped with contact switches, which report entry to the alarm termination panel in the radar equipment shelter. In addition, when the hatch is opened, a signal is sent to a control relay in the DAU, which interrupts the control signals to the antenna pedestal and waveguide switch. As a result, the pedestal servos are placed in standby, stopping antenna motion, and the waveguide switch selects the dummy load position, inhibiting RF radiation.

3–2.7.5 MLOS Towers (UD20 and UD40). A MLOS tower may be used at an RDA (UD20), or RPG (UD40) site to support the MLOS antenna(s). There are two types of towers used: guyed and self–supporting.

3–2.7.5.1 Guyed MLOS Tower. The guyed MLOS tower is composed of 20–foot sections, having a triangular cross section. The maximum tower height is 330 ft. It is equipped with aircraft warning lights that are controlled by a photoelectric sensor. Power is supplied via the MLOS shelter.

3–2.7.5.2 Self–Supporting MLOS Tower. The self–supporting MLOS tower is composed of 20 foot sections, having a triangular cross section. The upper sections are straight sided, the lower sections taper outward. The maximum tower height is 165 ft. It may be equipped with aircraft warning lights which may be controlled by a photoelectric sensor.

3–2.7.6 Transition Power Maintenance Shelter (UD60). The 12x24 foot transition power maintenance shelter (TPMS) houses the transition power source (UD62) that supplies power to the RDA critical loads. The transition power source has the capability to ride through a loss of utility power for up to nine (9) minutes (minimum) at rated load allowing continuity of power to the RDA until the diesel generator has assumed site load. At NEXRAD sites having space within existing buildings, the transition power source is supplied as a stand–alone unit (selected NWS redundant sites only). The auxiliary equipment is discussed in paragraphs 3–2.7.6.1 through 3–2.7.6.3. See Figure FO3–16 and Figure FO3–17.

3–2.7.6.1 Power Distribution and Lighting. The power distribution equipment consists of the transition power source (TPS) with input, output, and bypass contactors, TPS fused disconnects or breakers to allow for isolation or manual bypass of the TPS, and the TPMS power distribution panel. Additionally, the TPS has an internal automatic bypass switch that automatically closes should the TPS output contactor open for any reason.

3–2.7.6.1.1 Shelter Power Distribution System Panel (UD60A5). Three phase 208 Vac power is supplied from the RDA main power distribution panel (UD7A2) by circuit breakers 38, 40, and 42. Power is distributed to the TPMS auxiliary loads as follows:

Shelter lighting	All shelters
Shelter receptacles	All shelters
Toilet receptacle	All shelters except Type 6
ECU(s)	All except Type 3; Types 4 and 7 have two ECUs
Electric toilet	Type 1, 4, 5, 7, and 9 only
Unit heaters	Type 3 only
Heat trace	Type 3 only

3–2.7.6.2 Heating, Ventilating, and Air Conditioning. Shelter temperature monitoring and regulation is provided by the environmental control unit (ECU) in all shelters except the Type 3's at Medford, OR, and Missoula, MT.

In all except Type 3 shelters, the wall–mounted thermostat controlling the ECU should have both the fan mode switch and the system mode switch set in the AUTO position. The temperature selector lever for cooling should be set at 75 °F and the heating lever should be set at 65 °F. With this configuration, the ECU will automatically switch to whatever mode (heating or cooling) is necessary to maintain shelter temperature. In the type 4 and 7 shelters that have two ECUs, a wall–mounted lead–lag thermostat controls both ECUs to maintain the shelter temperature.

This type of ECU also has an economizer package that will allow cooling of the shelter with outside ambient air if the temperature and humidity are within preset values. An enthalpy controller located in the outside unit activates the economizer. The controller responds to the total heat content of the outdoor air to provide changeover to outside air for free cooling. It opens the economizer damper in the outside unit so that outside air can be admitted to the shelter.

The economizer setting is factory set and field verified at the "D" position that equates to 58 °F at 50% relative humidity and it should remain in this position. The mixing damper will operate on this setting if the outside environment is between 50 °F at 80% humidity to 63 °F at 10% humidity and various points in between. So as the humidity of the air increases, it requires a lower air temperature to operate.

After the enthalpy control has activated and outside air is being brought into the shelter, the mixed air sensor measures the temperature of the air and then modulates the economizer damper to mix the right proportion of cool outside air with warm indoor air to maintain 50–56 °F air delivered to the shelter. The compressor is not permitted to operate when the economizer is activated. When outside air temperature exceeds the 58 °F "D" setting, or humidity rises above 50%, the mechanical compressor will assume shelter cooling and the damper will close.

The ECU control circuit also incorporates a compressor time delay feature that prevents the compressor from restarting immediately after a power interruption. This delay is adjustable from .2 – 8 minutes and will be field set at 3 minutes.

Finally, there is a damper position potentiometer that is set in the "MID" position. This setting determines the distance of travel the ECU damper will open upon receipt of a 1% hydrogen alarm. This mid setting will allow the damper to only open 50% when activated by the hydrogen sensor. It does not limit damper travel when in the economizer mode.

There are two additional thermostats, both located in the shelter. These are associated with monitoring the interior temperature of the shelter. One thermostat, used as a shelter high temperature alarm, is set for 80 °F, and is located above the alarm termination panel in Types 1, 2, 3, and 4 shelters. In Type 5 and later shelters, it is located on the left–hand end wall above the alarm termination panel. When the 80° setpoint is reached, the thermostat contacts open and activate the "TPS OFF" alarm to the RDA. The TPS continues to operate as normal. While this is not truly a TPS off signal, it is the only alarm input available from the TPS to the RDA. If upon arrival at the site, the TPS is still running normally, the signal is probably coming from this thermostat. This alarm resets when the temperature returns to below the setpoint.

The other thermostat is the shelter high temperature shutdown thermostat. This thermostat is set at 90 °F and closes its contacts and sends a shutdown signal to the TPS if the shelter interior temperature exceeds 90 °F. This thermostat is located near the hydrogen detector in Types 1, 2, and 4 shelters and is located beside the alarm termination panel in Types 5 and later shelters. When a shutdown signal is received by the TPS, it transfers the critical load to bypass and shuts down. If the shelter temperature returns to below the shutdown setpoint the TPS **will not restart**. This situation necessitates a trip to the site to manually restart the TPS. If the shelter air conditioning unit breaks down, it is important that it be repaired as soon as possible for two reasons, first, the TPS will not be available if the shelter temperature is above 90 °F, and second, the battery life may be shortened due to the elevated ambient of the shelter.

In Type 3 shelters, intake and exhaust dampers, exhaust fan, and unit heaters provide ambient temperature control of the shelter. The dampers are controlled by the louver thermostat that is set at 60 °F and the exhaust fan is controlled by the exhaust fan thermostat that is set at 70 °F. These settings must be kept at least 10° apart to ensure that the fan does not start against a closed damper. These two thermostats are located beside each other to the right of the TPS and to the right of the shelter high temperature shutdown thermostat.

The two unit heaters are set at slightly above the minimum setting (approx. 50 °F) to prevent the shelter from getting cold enough to freeze the batteries if the TPS is not running and assist in maintaining shelter temperature above the 50° mark in the colder months. The Type 3 shelter also has the shelter high temperature alarm and shutdown thermostats that operate the same as noted in the above paragraph. The four thermostat settings for the **Type 3** shelter should be as follows:

Louver thermostat	60 °F
Exhaust fan thermostat	70 °F
Shelter high temperature alarm	80 °F
Shelter high temperature shutdown	90 °F
Unit heaters	Set at slightly above the minimum setting

3–2.7.6.2.1 TPMS Motorized Dampers (Type 3 only). Ruskin Manufacturing Company manufactures the motorized dampers used in the TPMS. The intake damper is model IL35 having

an opening of 18 X 48. The exhaust damper is also an IL35 with an opening of 20 X 20. The damper control scheme is designed to have the exhaust damper fully open prior to the start of the exhaust fan.

3–2.7.6.2.2 TPMS Fans (Type 3 only). The TPMS fan is an exhaust fan associated with the TPS and is manufactured by Dayton Superior Corporation. The exhaust fan is a 16", aluminum blade fan driven by 1/4 hp 115 Vac motor and is mounted in the exhaust damper duct.

3–2.7.6.2.3 TPMS Thermostats. The following shelter types have the quantity and model number of thermostats as indicated below:

Types 1, 2, 4, 5, 6, 7, and 9	Dayton Model 2E206, (2), one for shelter high temperature alarm, and one for shelter high temperature shutdown
	White Rodgers Model 1C74–2, (1) (except Type 9) controls the ECU. Type 9 has Dayton Model 2E397.
Type 3	Dayton Model 2E206, (4), one for intake and exhaust damper control, one for exhaust fan control, one for shelter high temperature alarm, and one for shelter high temperature shutdown
	Johnson Controls Series A–19, with a remote sensing bulb, used to control the heat trace wiring in the intake and exhaust hoods
	Unit heaters have thermostat controls that are part of the unit.

3–2.7.6.3 Security and Status Monitoring. The alarm termination panel (UD60A6) collects the following information:

- TPMS door status
- System normal

This data is relayed to the generator shelter alarm termination panel (UD10A9). The TPMS door status alarm is sent in parallel with the generator door status signal to the security panel. The system normal status is routed to the DAU. Other TPS statuses are not transmitted to the DAU as RDA software build 10.0 only supports one signal from the TPS. The "System Normal" signal was chosen because this condition changes should any condition result in the TPS going to auto bypass mode.

The alarm termination panel receives an "On–Gen Set" signal from diesel generator control circuitry.

3–2.7.7 Transition Power Source (UD62). The transition power source (TPS) consists of two cabinets (Types 1 through 4). One cabinet contains the TPS unit and the other cabinet contains the batteries. In Types 5, 6, 7, 9, and TPS only installations there is a third cabinet, the maintenance bypass module (MBM). The MBM provides the TPS disconnecting circuit breakers as well as the maintenance bypass path that is used when the TPS is out of service.

There are two different types of TPS disconnecting devices used in the different shelters. The names of the devices vary but their function is exactly the same. They are as follows:

Type 1, 2, 3, and 4 Shelters: These shelters have fused disconnects for the TPS input, TPS output, and the maintenance bypass and are located on the wall that faces the TPS. They are identified from left to right as follows:

- TPS input fused disconnect (UD61A5S1)
- Maintenance bypass fused disconnect (UD61A5S2)
- TPS output fused disconnect (UD61A5S3)

Types 5, 6, 7, 9, and TPS Only: These installations utilize a maintenance bypass module (MBM) and have circuit breakers for TPS isolation. The MBM is a line–up and match cabinet that is attached to the TPS and battery cabinets. The breakers in the MBM are identified as follows from top to bottom:

- MBB –– Maintenance bypass breaker (UD64CB2)
- UOB –– TPS output breaker (UD64CB3)
- UIB –– TPS input breaker (UD64CB1)

3–2.7.8 Transition Power Source Operating Modes. The TPS unit operates as an on–line power conditioning system in the following modes:

3–2.7.8.1 Normal Mode. In the normal mode, utility power is supplied through CB1 to the TPS rectifier to convert the incoming AC to regulated DC volts and supply it as an input to the TPS inverter. The DC circuit between the rectifier and the inverter is called the DC link. Thus, the TPS completely isolates the critical load from utility power, while providing clean, conditioned, and regulated power. In this mode the K2 battery contactor is connected to the DC link. The DC link ties the batteries to the inverter input for a back–up power source. The inverter converts the DC voltage to a conditioned, regulated AC voltage that is applied to the critical load.

In addition, a trickle charge is provided to the batteries in the battery cabinet to ensure that they will be available in a fully charged state when needed. The battery charge condition is monitored and reported via the monitor panel display. If the utility AC power fails or does not meet preset parameters, the TPS automatically reverts to the battery mode of operation.

3–2.7.8.2 Battery Mode. The battery mode is initiated automatically if utility power does not meet preset parameters or if a utility failure occurs. The TPS switches without interruption to emergency DC power. In this system a battery cabinet provides the backup power. It is connected to the system through the battery contactor, K2. This DC voltage is supplied to the inverter that in turn converts it to a regulated, conditioned AC voltage to support the critical load.

When the unit switches to battery mode, an alarm indicates some sort of utility failure has occurred. The unit will remain in this mode until one of the following occurs:

- Utility power returns

- Site E/G starts and assumes the site load
- The battery DC voltage drops to the DC Under–Voltage (DCUV) limit and is unable to support inverter operation

When the DC voltage drops low enough that it is unable to support inverter operation, the TPS will automatically transfer to bypass mode. If the bypass power source is not available (utility or generator power), the unit will issue a SHUTDOWN IMMINENT WARNING alarm. This indicates there is approximately two minutes remaining before the unit will shut down its output. The time is variable depending on battery capacity and the load on the unit.

Restoration of power from either utility or site generator will automatically turn the rectifier back on and the TPS will then power up and return to the normal mode. This is an automatic function and will cause no interruption to the critical load. At this time the rectifier will also recharge the batteries in addition to supplying the critical load.

3–2.7.8.3 Shutdown. If AC Power is not restored within the designed ride–through time, the unit will transfer to bypass mode, the output contactor of the TPS will automatically open to disconnect the system and preclude out–of–tolerance conditions. Upon restoration of either site generator or utility power, the TPS will automatically restart and assume the critical load.

3–2.7.8.4 Bypass Mode. The TPS is in the bypass mode whenever the critical load is supported through the closed bypass contactor K4. The bypass mode is established either by manual operation of the mode switch or by a signal from the static switch as described below. When maintenance is to be performed in the TPS, a maintenance bypass configuration as described below is established to electrically isolate the TPS from the site power system. In this configuration, power is then supplied through the closed maintenance bypass fused disconnect or maintenance bypass breaker (MBB).

3–2.7.8.4.1 Manual Transfer to Bypass. When an operator positions the mode switch from normal to bypass position, the bypass contactor K4 of the TPS will close. This transfer momentarily parallels the inverter output at the output contactor K3 with the bypass power source (utility or generator) at the bypass contactor K4 to ensure a make–before–break transfer with no interruption to the load. After K4 closes, K3 will open placing the critical load on bypass. The static switch does not have a function during manual transfers.

3–2.7.8.4.2 Automatic Transfer to Bypass. The system will automatically transfer the critical load to bypass if:

- The TPS is off
- It detects a critical bus overload
- A critical bus over/undervoltage
- An internal failure of the TPS
- When TPS is in battery mode and the battery capacity is insufficient
- A shelter high temperature shutdown is detected
- Hydrogen content in the shelter in excess of 2%

When an automatic transfer to bypass occurs, the internal modem will report the alarm if it is connected to the site phone system.

When the TPS automatically initiates the TRANSFER TO BYPASS command, the static switch will momentarily gate ON to carry the load. After the static switch conducts, the output contactor K3 opens. This means that the entire load is supported by the power components in the static switch assembly. Next, the bypass contactor K4 closes. When K4 closes, the static switch gates OFF. The load is then supported by the bypass source through K4. The static switch operation only occurs during the transfer time and only during an automatic transfer. Gating time for the switch is two seconds. Except in the case of a shelter high temperature shutdown or shelter hydrogen shutdown, the following scenario will take place. Should an automatic transfer take place the inverter will automatically attempt to re−transfer back on line to support the load up to three times within a ten−minute period. If the condition(s) causing the initial automatic transfer has not been corrected after three attempts to remain in normal mode, the TPS will stay in bypass mode and the alarm condition will be recorded.

3−2.7.8.4.3 Manual Transfer from Bypass. With the TPS operating in bypass mode and the output contactor K3 open, placing the mode switch in normal position and rotating the start key switch on the TPS control panel will initiate a transfer from bypass to normal mode. When the key is rotated, the K3 will close to parallel the TPS output to the bypass power at K4. The bypass contactor K4 will then automatically open and the TPS will now supply the critical load.

3−2.7.8.5 Maintenance Bypass. When the TPS must be taken out of service for maintenance, the TPS output must first be synchronized with the TPS input power source by manually positioning the load/bypass switch to the bypass position. This transfers the TPS load to the utility source without any interruption in power to the critical load. With the TPS in bypass mode (output contactor K3 is open), the maintenance bypass fused disconnect or the maintenance bypass module MBB breaker is closed before opening of any other TPS disconnects or MBM breakers to isolate power to the TPS. To preclude unsynchronized paralleling of the TPS inverter output with site power, the MBM bypass breaker MBB is electrically interlocked with the output contactor K3 to prevent closing of the MBB breaker if the TPS is not in bypass mode. With Type 1 through 4 TPMS installations, a normally open auxiliary contact on the maintenance bypass disconnect is used to force the TPS into bypass mode if the disconnect is closed with the TPS on−line.

Once the maintenance bypass breaker (MBB) or the maintenance bypass disconnect is closed, open the UIB breaker or input disconnect followed by opening the UOB breaker or output disconnect. The battery power supplied to the TPS is then removed by opening the breaker in the battery cabinet. With the battery cabinet breaker and the UIB and UOB breakers (input and output disconnects) open, the TPS cabinet is electrically isolated for maintenance. Note that the capacitors in the TPS circuitry will still be energized and appropriate electrical safety precautions should be taken during maintenance activity in the cabinet. A more detailed explanation will follow.

3−2.7.9 Transition Power Source Control Panel. The TPS unit is operated by using the control panel (UD62A6) located behind the door of the TPS. The panel consists of the following:

1. Mode switch is a two−position rotary switch that controls the manual transfer of the TPS to and from the bypass mode. The mode switch is used to:

- Place the critical load in the bypass mode when the TPS is operating in the normal mode and the bypass source is within acceptable limits. If the transfer does not occur within two seconds, an alarm will sound.
- Prevent transfer to the normal mode when the TPS is in the bypass mode until the start key switch is rotated.
- Shut down the power processing unit (inverter and rectifier) of the TPS.

2. Battery switch is a two–position rotary switch that allows you to manually enable or disable the battery contactor (UD62K2).

3. Circuit breaker CB1 controls the operation of the rectifier and inverter. When CB1 is on (closed) the rectifier will turn on when the start switch is activated and the proper voltage is at the input terminals. When CB1 is off (open), the monitor panel (UD62A5) and cabinet fans still function.

4. Start switch activates the power controls on the control panel. The switch is center–biased meaning that the key will return to the mid position when released similar to a car start switch. After setting the operator controls, you turn the start switch momentarily to the right to activate the controls.

5. Push to reset pushbutton must be pushed in and remain in the recessed position.

There is an additional pushbutton located on the front panel of the TPS. It is located below the monitor screen on the right. It is protected by a clear plastic shield to prevent accidental activation. In the event of an emergency, depressing this pushbutton instantaneously opens the input breaker and interrupts TPS output. ALL UTILITY POWER WILL BE LOST TO THE CRITICAL LOAD. All power will remain off until the push to reset pushbutton noted above is pushed in.

Please read the following warning concerning the load off pushbutton located behind the plastic shield on the monitor panel.

WARNING

PLEASE MAKE SURE THAT YOU UNDERSTAND THE FUNCTION OF THE *LOAD OFF* PUSHBUTTON LOCATED BEHIND THE PLASTIC COVER ON THE FRONT PANEL OF THE TPS. REFER TO THE NWS EHB 6–554–5 MANUAL FOR MORE DETAILED INFORMATION.

IF THIS BUTTON IS PUSHED, ALL POWER TO THE CRITICAL LOAD WILL BE LOST. YOU SHOULD ONLY USE THIS FEATURE IN AN EMERGENCY WHEN YOU WANT TO DE–ENERGIZE THE CRITICAL LOAD AND SHUTDOWN THE TPS IMMEDIATELY.

DEPRESSING THE "LOAD OFF" PUSHBUTTON WILL SHUT DOWN THE RADAR SYSTEM.

3–2.7.9.1 Maintenance Bypass. This condition is different than the automatic or TPS internal bypass discussed previously. The maintenance bypass is used when the TPS is to be taken out of

service for maintenance or repair. It completely isolates the TPS from utility and generator power and back feed from the site critical power. It does not, however, isolate the TPS from the battery voltage. Battery voltage to the TPS is controlled by the battery disconnect breaker located in the battery cabinet. This battery breaker must also be opened during TPS maintenance activities.

In the Type 5 and later TPMSs that have the maintenance bypass module (MBM) (UD64), the MBM UOB and MBB breakers (UD64CB3 and UD64CB2 respectively) are equipped with shunt trips that are controlled by the electrical interlock in the MBM. With the TPS output contactor K3 closed and the UOB breaker closed, the interlock will send a shunt trip signal to the shunt trip unit of the MBB. If an attempt is made to close the MBB breaker with the UOB breaker closed, the breaker will "trip free" without any closure of its contacts. This condition is indicated by a breaker handle that is neither in the open or closed position, but in between. To reset this condition the breaker handle must first be moved to the OFF position before it can be closed. It also follows that if the MBB is closed, the UOB is prevented from closing using the same breaker trip–free logic. This tripping scheme prevents the TPS inverter output from being paralleled with the utility source. When the TPS is off–line and in the bypass mode, the shunt trip features of the UOB and MBB are not available.

In the Type 1 through 4 TPMSs, the maintenance bypass fused disconnect (UD61A5S2) is not interlocked with the TPS output contactor K3. At these sites, a normally open auxiliary contact on the disconnect is used to provide a shutdown signal to the TPS if the disconnect is closed with the TPS on–line. If the disconnect is closed with the TPS on–line, the TPS will automatically go to bypass mode.

3–2.7.9.1.1 Placing the TPS in Maintenance Bypass Mode. To place the TPS in the maintenance bypass mode you **must always** first place the TPS in the internal bypass mode by placing the mode switch located on the TPS control panel to the bypass position. This condition will allow the critical load to be fed directly by the utility source and the TPS will be off–line. Once the unit is in bypass, the following sequence will isolate the TPS from the utility source.

- Close the maintenance bypass module (MBM) MBB breaker (UD64CB2) or maintenance bypass fused disconnect (UD61A5S2).
- Open the MBM UIB breaker (UD64CB1) or input fused disconnect (UD61A5S1).
- Open the MBM UOB breaker (UD64CB3) or output fused disconnect (UD61A5S3).
- Open the battery breaker if maintenance is to be performed.

The open breakers can then be locked out for maintenance or other activities. Note that the capacitors in the TPS circuitry are still energized. Refer to NWS EHB 6–554–5 before performing maintenance activities on TPS components.

3–2.7.9.1.2 Restoring the TPS to service.

- Close MBM UIB breaker (UD64CB1) or input fused disconnect (UD61A5S1).
- Close or verify that the battery breaker is closed.

- Ensure load off push to reset button is pressed in.
- Place CB1 to on position.
- Turn or verify that the battery switch is in the normal position.
- Verify that the mode switch is in the bypass position.
- Turn the start switch momentarily to the right and release. Verify that the inverter output builds to approximately 208 volts and the bypass indicator illuminates on the monitor panel.

The status indicator on the TPS monitor panel should indicate that the unit is in the bypass mode. If it does not indicate that the unit is in bypass, do not proceed any further until the unit is in bypass.

- Close the MBM UOB breaker (UD64CB3) or output fused disconnect (UD61A5S3).
- Open the MBM MBB breaker (UD64CB2) or maintenance bypass fused disconnect (UD61A5S2).
- Rotate the mode switch from bypass to normal position.
- Turn the start switch momentarily to the right and release.
- The TPS should synchronize (output contactor K3 closes followed by bypass contactor K4 opening) and assume the site critical load.

3–2.7.10 Transition Power Source External Controls and Indicators. This section describes the monitor panel and how to monitor and control TPS operation. The monitor panel is a black rectangular area on the front of the TPS (see Figure 3–1).

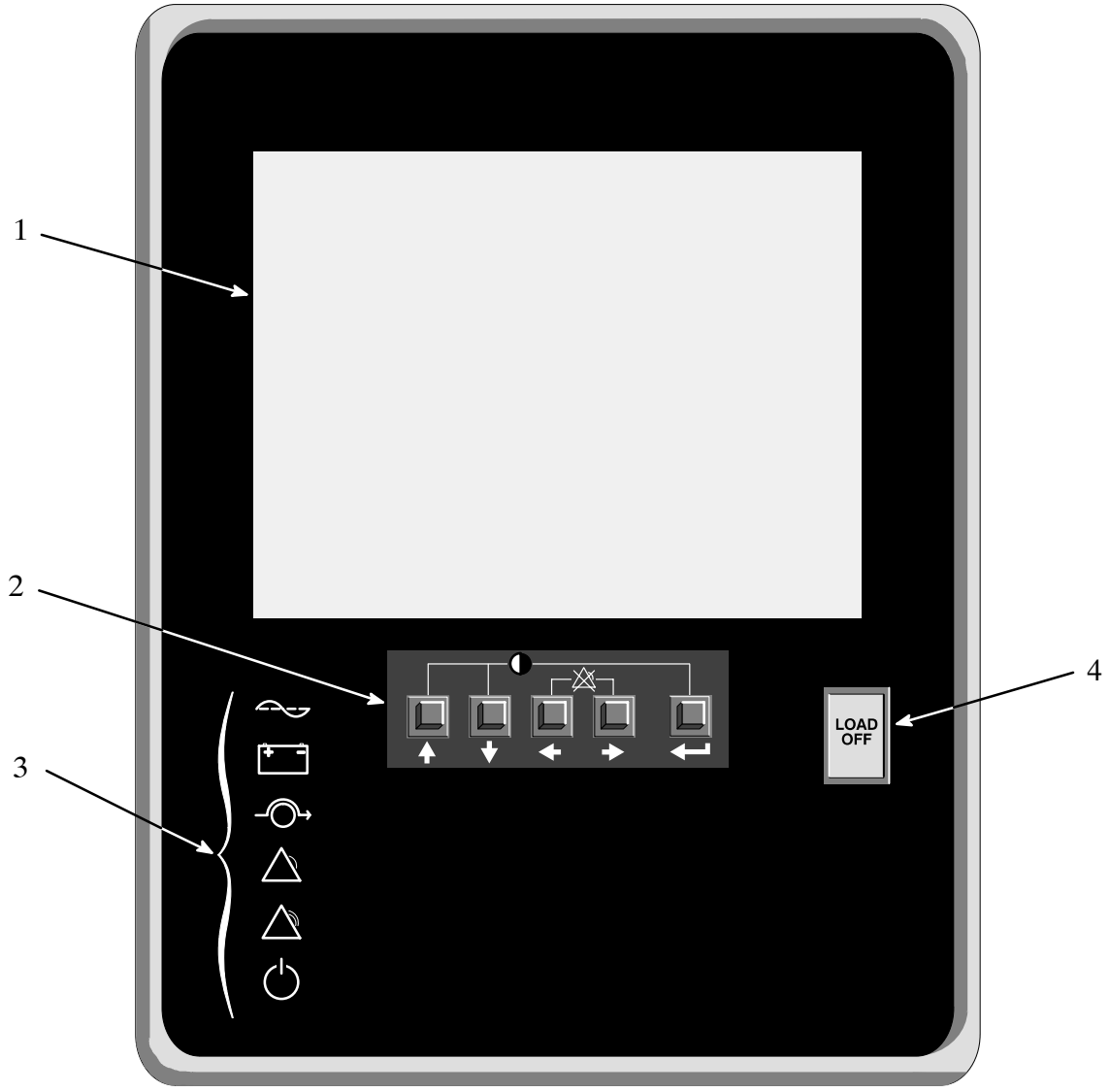

NX2281

Figure 3–1. TPS Monitor Panel

The Monitor Panel contains a flat liquid crystal display (LCD) screen (1), a horizontal row of pushbuttons (2), a vertical column of backlit status indicators (3), and the red LOAD OFF

pushbutton (4). A quick reference label describing how to use the monitor panel is located inside the TPS above the control panel. The following sections describe the monitor panel in detail.

3–2.7.10.1 Using the LCD Screen. The LCD screen at the top of the monitor panel provides an operator interface with the TPS. Figure 3–2 identifies the display fields discussed in the following sections.

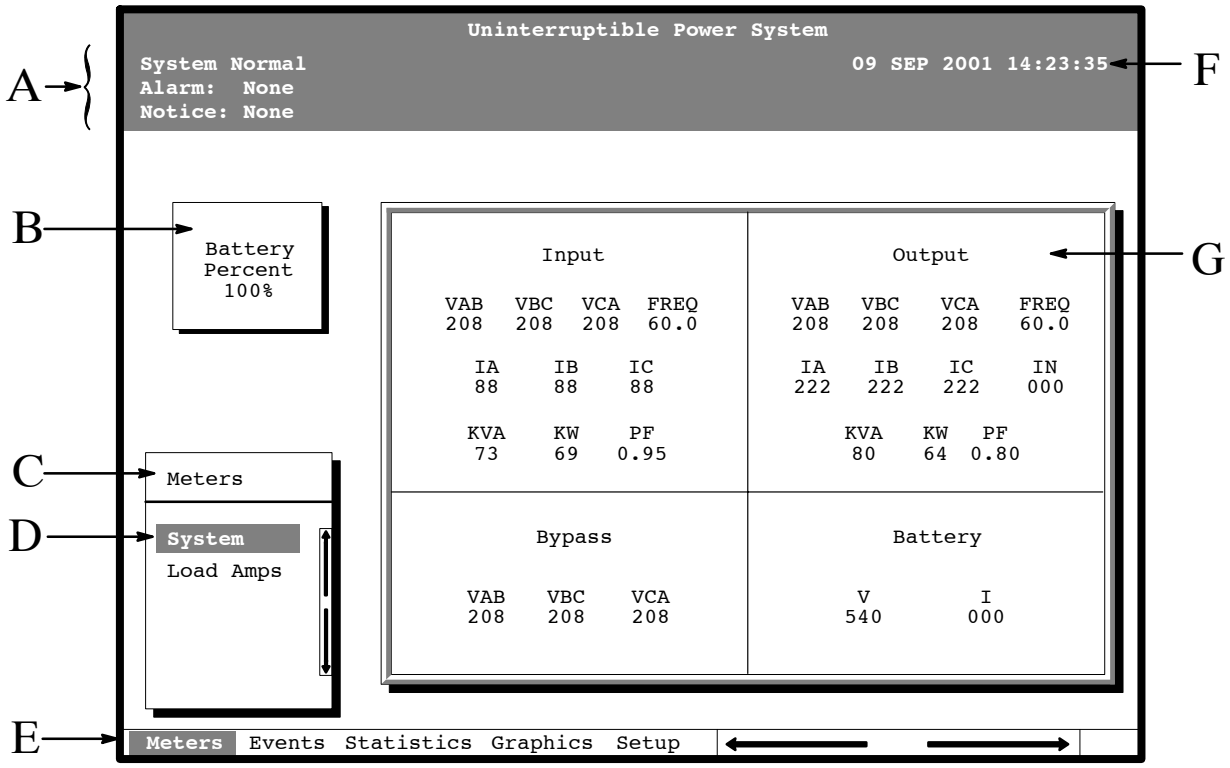

Figure 3–2. Parts of the LCD Screen (Typical for Powerware 9315–80 208/208V Unit)

A The *TPS status area* contains three lines that display the current state of the TPS. The first line shows the present operational mode of the TPS. The second line shows the highest level of the current active alarms, and the third line shows any notices the TPS has posted.

B The *battery charge box* shows the percentage of battery capacity available. When the TPS is operating in the battery mode, this box displays how much battery time remains (in minutes).

C The *menu box* shows the currently selected menu and lists the options available on that menu. The title at the top of the menu box is also shown below on the menu bar (**E**). Press the ⇧ and ⇩ pushbuttons to scroll up and down through the options in the menu box.

D The currently selected *option* is highlighted in the menu box. Press the ⇧ and ⇩ pushbuttons to move the highlight up or down. The data in the information area (**G**) changes accordingly.

E The *menu bar* lists the titles of the menus. The title of the menu currently displayed in the menu box is highlighted. When you press the ⇦ and ⇨ pushbuttons to move the highlight left or right, the data in the menu box and the information area changes accordingly.

F The *timestamp* shows the current date and time. This date and time are recorded in the event log when a notice or alarm is activated.

G The *information area* contains data about TPS status and operations. Select a menu option to display statistics or graphics.

You can use the LCD screen and the pushbuttons beneath it to:

- Monitor TPS operation.
- Look at a log of TPS events (alarms, notices, and commands).

3–2.7.10.1.1 Using the Pushbuttons. The *pushbuttons* below the LCD screen are labeled with arrows indicating their functions:

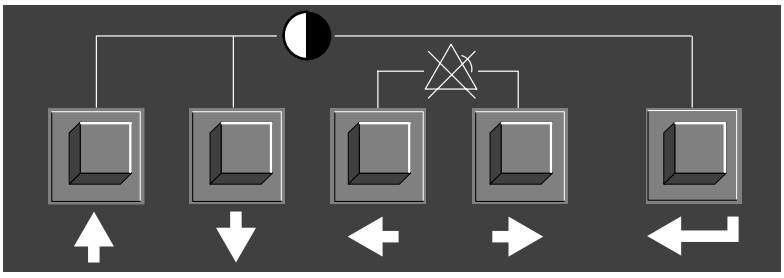

- Press the ⇧ and ⇩ pushbuttons to move through the options in a menu, or to scroll through the list of alarms and notices in the event log.
- Press the ⇦ and ⇨ pushbuttons to move through the menu titles on the menu bar. Press them simultaneously to silence the horn, or to test the lamps behind the status indicators.
- Press the ⇦ pushbutton to toggle the use of the ⇧ and ⇩ pushbuttons between the menu box and the information area.

3–2.7.10.1.2 Adjusting the Contrast. Use the pushbuttons to adjust the contrast on the LCD screen. Hold down the ⇦ pushbutton, then press the ⇧ pushbutton to increase the contrast or the ⇩ pushbutton to decrease the contrast.

3–2.7.10.1.3 Using the Load Off Pushbutton. The **LOAD OFF** pushbutton is red and covered by a clear plastic shield. In an emergency, you can press this pushbutton to cut off utility power to the power processing unit of the TPS and to your critical load.

CAUTION

All power to the critical load is lost when you press the LOAD OFF pushbutton. You should use the LOAD OFF pushbutton only when you want to de–energize the critical load.

3–2.7.10.1.4 Reading the Status Indicators. The six symbols on the left side of the monitor panel are *status indicators*. They are backlit by colored emitting diode (LED) lamps, and they work in conjunction with the alarm horn to let you know the operating status of the TPS.

Normal 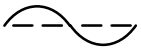

This green symbol is lit only when the TPS is operating in normal mode. The power processing unit (PPU) is supplying power to the critical load.

Battery 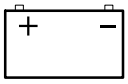

This yellow symbol is lit only when the TPS is operating in battery mode. Because battery mode is a normal condition of the TPS, the normal indicator also remains lit.

Bypass

This yellow symbol is lit only when the TPS is operating in bypass mode. The critical load is supported by the bypass source. The normal indicator is not lit when the system is in bypass mode.

Notice

This yellow symbol is lit only when the system needs attention. The LCD screen shows all active notices. Some notices may be accompanied by an audible horn. To silence the horn, press the ⇦ and the ⇨ pushbuttons simultaneously. The notice indicator may be lit along with other indicators.

Alarm

This red symbol is lit only when a situation requires immediate attention. The LCD screen shows the highest priority active alarms. All alarms are accompanied by an audible horn. To silence the horn, press the ⇦ and the ⇨ pushbuttons simultaneously. The alarm indicator may be lit along with other indicators.

Standby 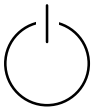

This yellow symbol is lit when electricity is present in the PPU of the TPS and the normal indicator is not lit. During normal startup, this indicator illuminates until the TPS transfers to normal mode, at which point the normal indicator is lit. During normal shutdown, the standby indicator is lit until all energy in the TPS is dissipated and shutdown is complete.

To test the LED lamps behind the status indicators, press the ⇦ and ⇨ pushbuttons simultaneously for 5 seconds. All the indicators should light while you hold down these pushbuttons. If any indicator does not light, its LED may need to be replaced.

3–2.7.10.1.5 Using the Menu Options. The TPS *menus* allow you to display data in the information area to help you monitor and control TPS operation. The following menus and options are available:

- **Meters** Displays TPS performance meters for the system or critical load

- **Events** Displays the list of active system events and a historical log of system events
- **Statistics** Displays statistical information about TPS operations for the battery, load, or line
- **Graphics** Displays a real-time graphic representation of the flow of current through the internal TPS components
- **Setup** Allows you to configure the TPS communications port and set the date and time for the timestamp

Figure 3–3 shows the LCD screen as it appears when you first start the TPS. The Meters menu is displayed in the menu box, with the System option highlighted. In the information area, the system meters show their current readings.

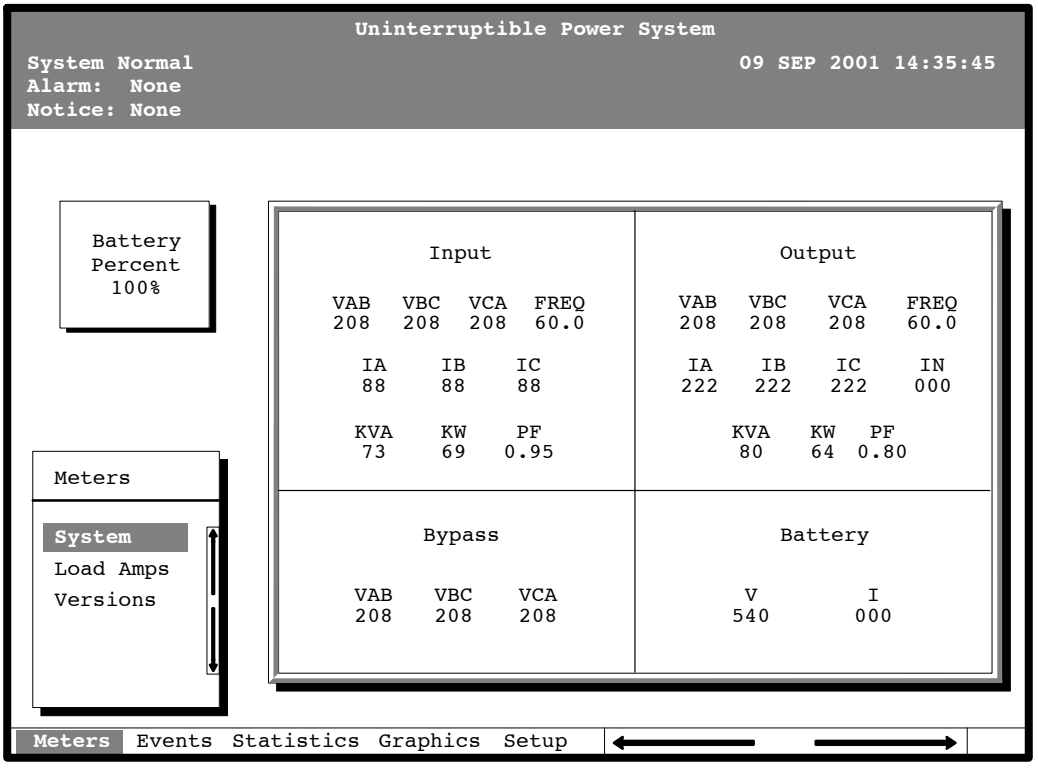

Figure 3–3. System Meters Screen (Typical for Powerware 9315–80 208/208V Unit)

The Input area shows the phase–to–phase voltage, frequency, and phase current of the incoming utility, followed by the kVA, kW, and power factor measurements. The Output area shows the same information for the power being output by the TPS.

The Bypass area shows the phase–to–phase voltage of the bypass source. The Battery area displays the DC voltage (V) and the DC current (I).

The Battery Percent Box shows the percentage of battery capacity available. When the TPS is operating in battery mode, this box displays how much battery time remains (in minutes).

Figure 3–4 shows the Load Amps Meters Screen. Select **Load Amps** from the Meters menu to see a real–time bar graph of the output current of the TPS. The graph shows the current for each phase.

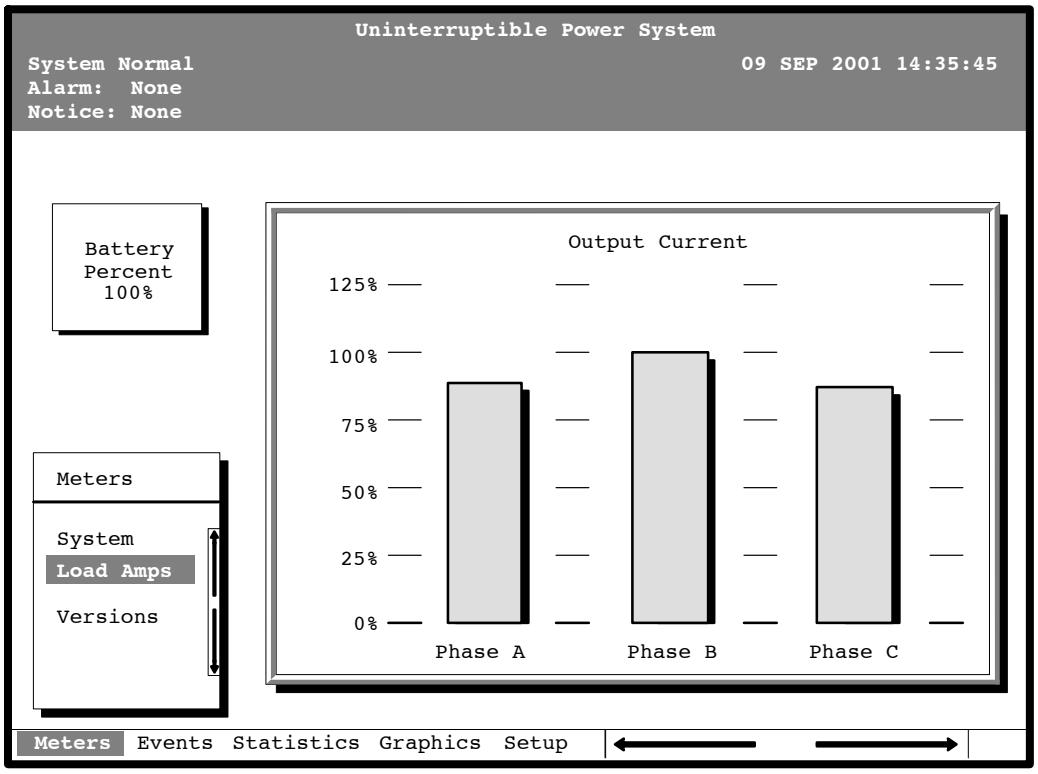

Figure 3–4. Load Amps Meters Screen

Figure 3–5 shows the Event History Log Screen. Select **History** from the Events menu to display the Event History Log. The Event History Log lists up to 400 system events in chronological order, with the most recent event listed last. The end of the log (the most recent events) appears when you display the screen, and you must scroll upward to view older event listings.

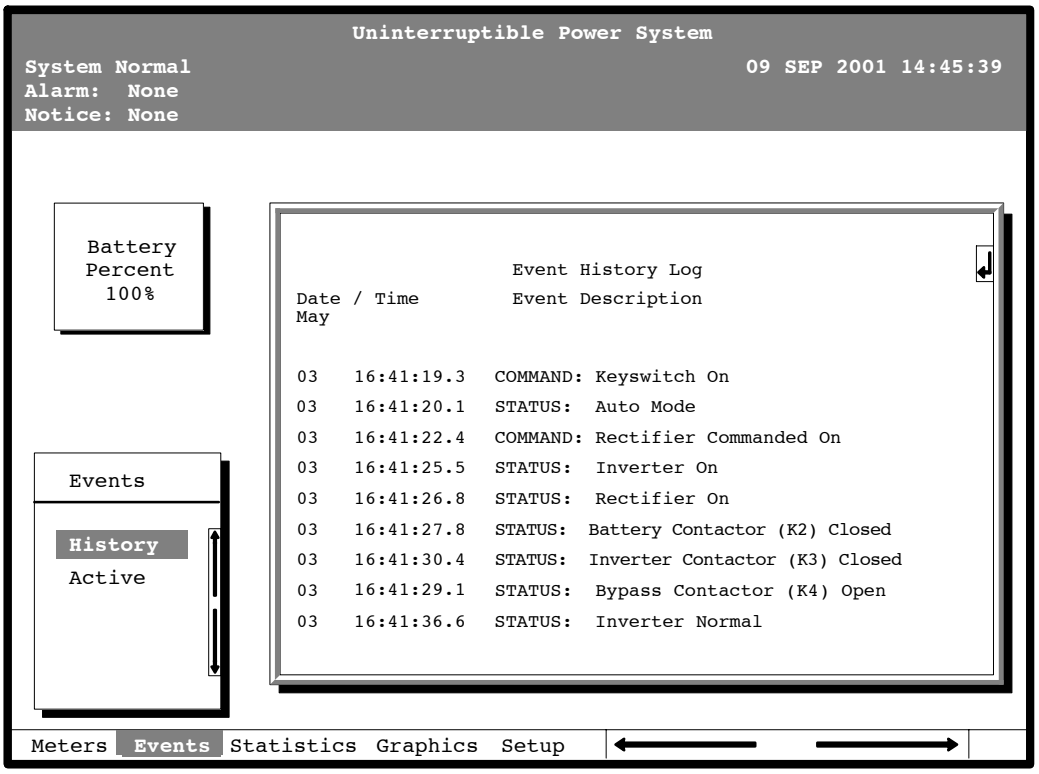

Figure 3–5. Event History Log Screen

A small return arrow (⇦) appears in the upper right corner of the information area of the Event History Log screen. This arrow is a reminder that you can press the ⇦ pushbutton on the Monitor Panel to toggle the scroll bar between the menu box and the information area. When the scroll bar is in the information area, the return arrow is in the menu box. When the scroll bar is in the menu box, the return arrow is in the information area.

When the scroll bar is in the information area, you can press the ⇧ and ⇩ pushbuttons to scroll through the Event History Log.

Figure 3–6 shows the Active System Events screen. Select **Active** from the Events menu to display a listing of all system events that are currently active. The most recent system event is listed first. As events clear, they are removed from the Active System Events listing and placed in the Event History Log.

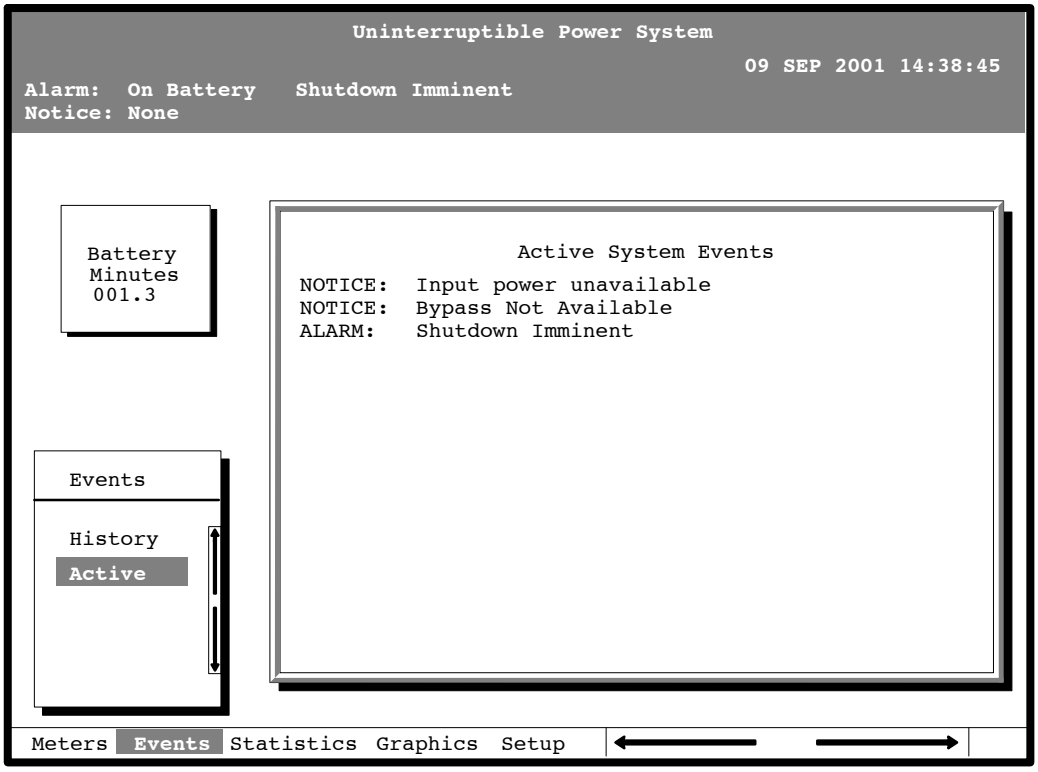

Figure 3–6. Active System Events Screen

Figure 3–7 shows the Unit Statistics screen. Select **Unit** from the Statistics menu to display a listing of statistics about TPS operation.

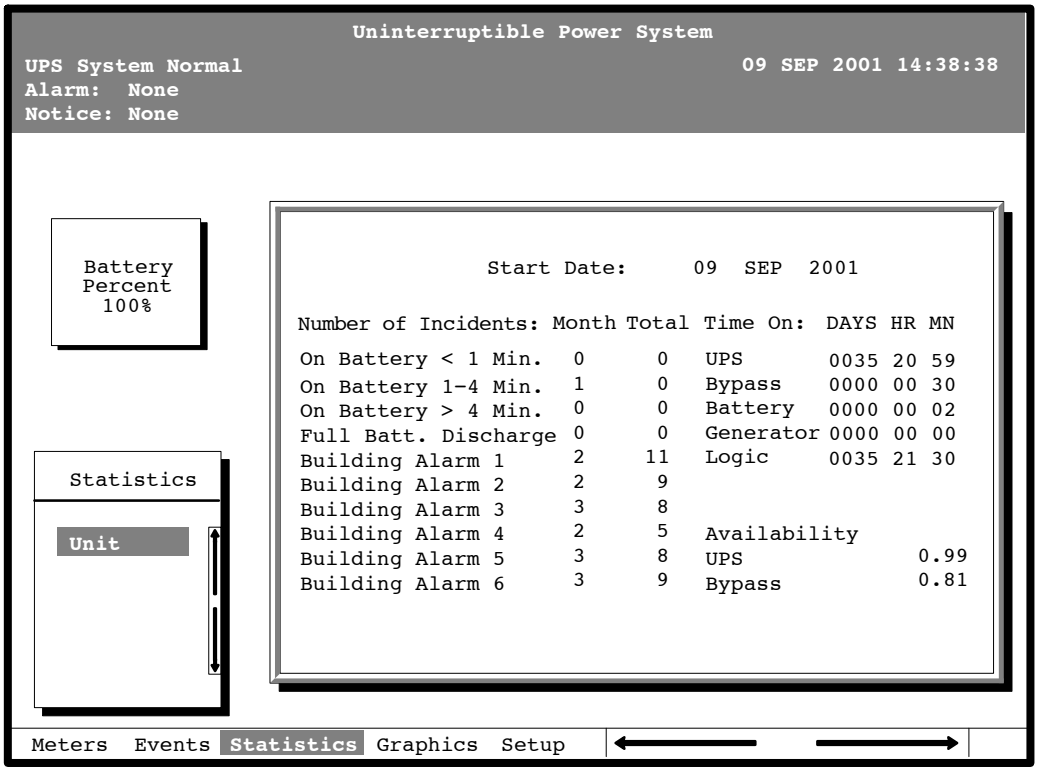

Figure 3–7. Unit Statistics Screen

The left column shows the number of TPS incidents for the current month and since the start date shown at the top of the screen. The top right column shows the time that the TPS was on bypass, battery, or generator, and the amount of time the TPS logic has been functioning since the start date. The lower right column shows the percent of availability of the TPS and the bypass source. The column “Month” resets at the end of each month. The “Total” column is always active and the “Stats” do not reset unless done so specifically.

Figure 3–8 shows the Mimic screen. Select **Mimic** from the Graphics menu to display a real-time graphical representation of the flow of current through the TPS.

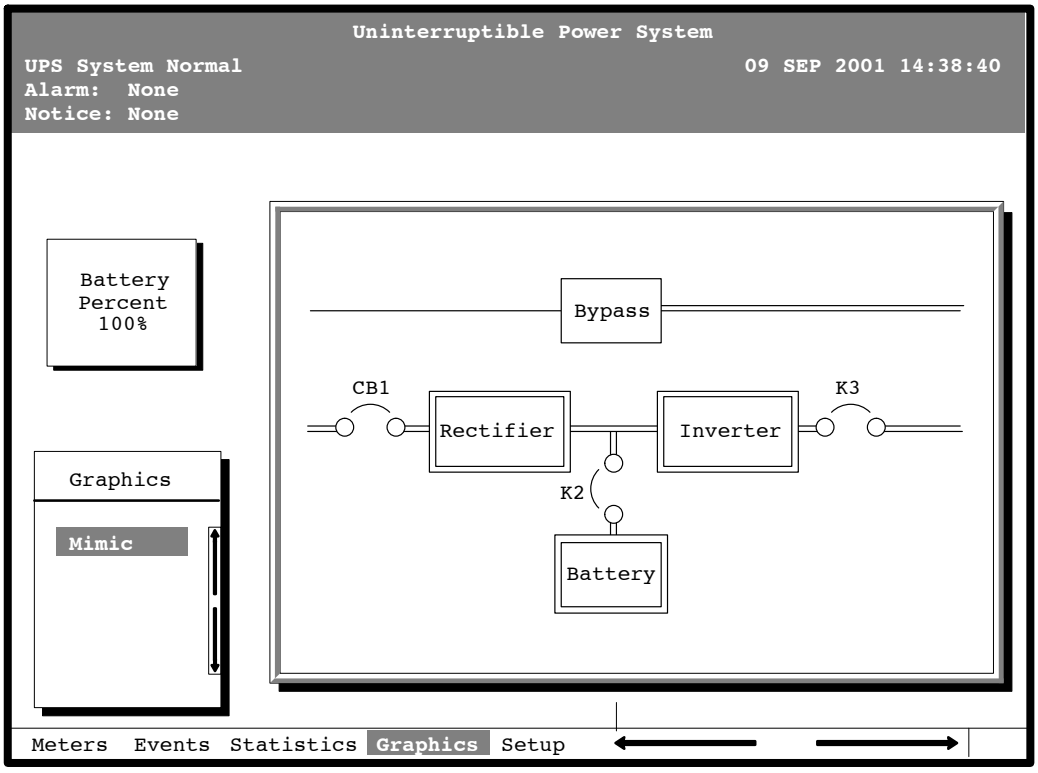

Figure 3–8. Mimic Graphics Screen

The Mimic screen shows the internal components of the TPS cabinet. The flow of current through the components is highlighted.

NOTE

The Bypass block can be viewed as the status or condition of contactor K4. When the block is lit (double lined) contactor K4 is closed; not lit means K4 is open.

Figure 3–9 shows the Time Setup screen. Select **Time** from the Setup menu to display the Time Setup screen. The Time Setup screen allows you to set the internal timestamp of the TPS. The timestamp is used for logging events in the Event History Log.

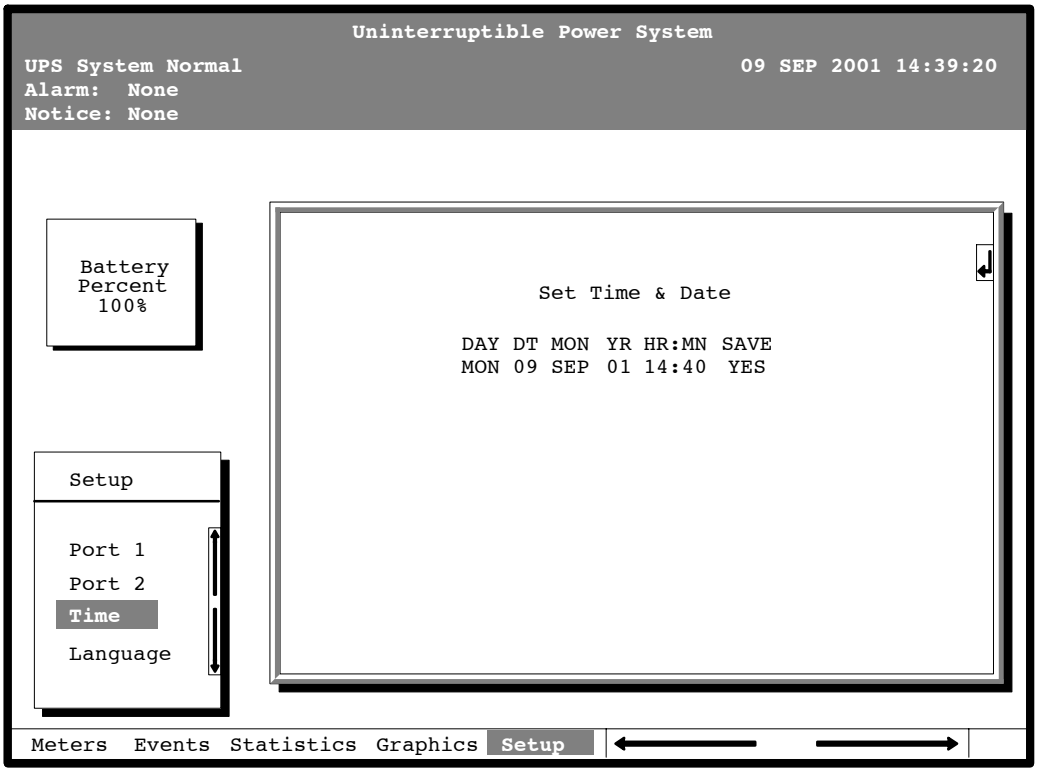

Figure 3–9. Time Setup Screen

The small return arrow (⇦) appears in the upper right corner of the Time Setup screen. This arrow is a reminder that you can press the ⇦ pushbutton on the monitor panel to toggle the pushbuttons between the menu box and the information area. When the scroll bar is in the information area, the return arrow is in the menu box. When the scroll bar is in the menu box, the return arrow is in the information area.

When the scroll bar appears in the information area, you can use the pushbuttons to change the timestamp settings. To change a setting in the timestamp, press the ⇦ and ⇨ pushbuttons to highlight the setting you want to change. To increase the setting (make it a higher value), press the ⇧ pushbutton. To decrease the setting (make it a lower value), press the ⇩ pushbutton. If you want to save the settings upon exit from this screen, be sure the SAVE field is set to YES.

Figure 3–10 shows the Setup Serial Port 1 screen. Select **Port 1** or **Port 2** from the Setup menu to display one of the Port Setup screens. The Port Setup screens allow you to specify settings for the two serial communication ports on the TPS. The setup screens for Port 1 and Port 2 are identical.

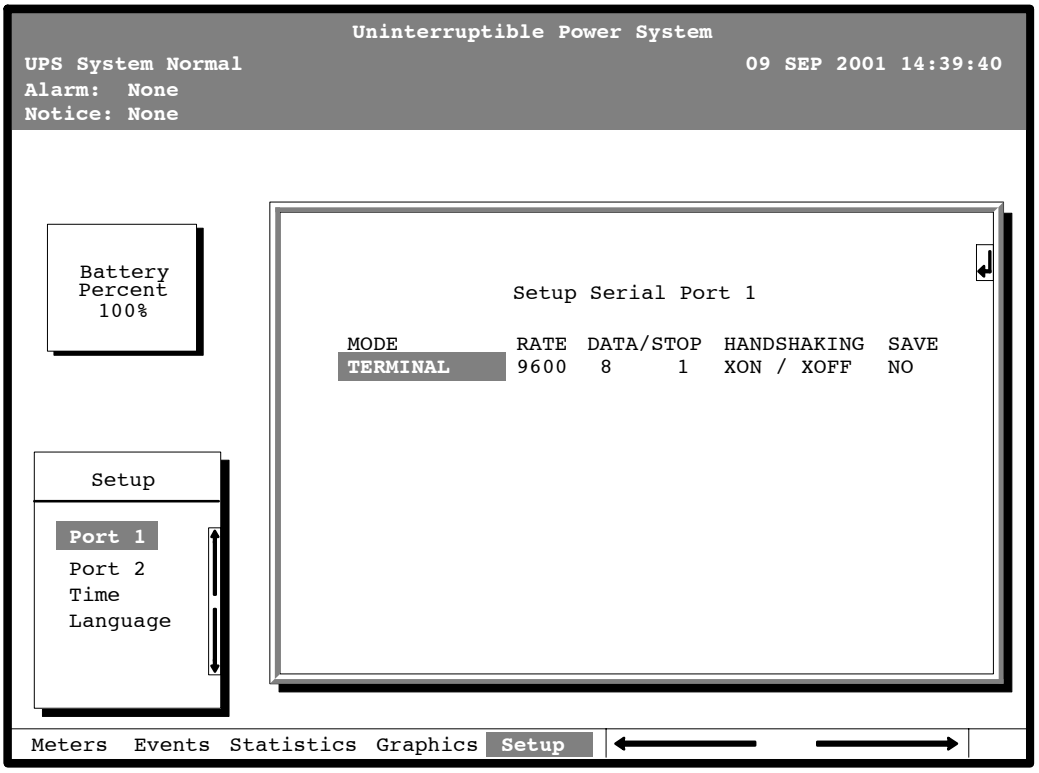

Figure 3–10. Port Setup Screen

The small return arrow (⇦⏎) appears in the upper right corner of the Port Setup screen. This arrow is a reminder that you can press the ⇦⏎ pushbutton on the Monitor Panel to toggle the pushbuttons between the menu box and the information area. When the scroll bar is in the information area, the return arrow is in the menu box. When the scroll bar is in the menu box, the return arrow is in the information area.

When the scroll bar appears in the information area, you can use the pushbuttons to change the port configuration. To change a setting, press the ⇦ and ⇨ pushbuttons to move the highlight to the setting you want to change. To scroll through the available options for that setting, press the ⇧ or ⇩ pushbutton. To save the settings upon exit from this screen, be sure the SAVE field is set to YES.

3–2.7.10.2 System Alarms. The TPS will respond to an input from four (4) building alarms. The type of alarm and TPS response is as follows:

Building Alarm #1—On generator	TPS normal operation.
Building Alarm #2—Hydrogen detector shutdown	TPS will transfer to bypass and shutdown.
Building Alarm #4—Shelter high temp shutdown	TPS will transfer to bypass and shutdown.
Building Alarm #6—Battery breaker open	TPS will continue to operate.

Building Alarm #3—This alarm is only in use at sites that use the fusible disconnect switches. It monitors the position of the maintenance bypass disconnect and will give the maintenance bypass alarm when this switch is closed. If the maintenance bypass disconnect switch is closed while the TPS is on–line, it will cause the TPS to trip off–line and go to bypass.

All of these alarms will record an event in the history log of the TPS when they are initiated and again when they clear.

The system event horn will sound depending on the type of event it is signaling. When the TPS detects an alarm that requires attention the horn beeps at 1/2 second intervals, when a notice occurs, the horn beeps at 2–second intervals, and if the battery contactor is open and the bypass mode is not available, the horn beeps every 4 seconds.

3–2.7.10.2.1 Supervisory Contact Module (SCM) (UD65). There is an SCM used in association with TPS operation. This is a black metal box that is mounted on the wall and does not have any external indicators on it. It is typically located above the eyewash bottles in all shelters. Its purpose it to provide an interface between the TPS and external equipment and monitors. In the NEXRAD system it provides a higher amperage set of contacts that enables the TPS to pick up the coil of the critical equipment contactor. The "System Normal" set of contacts is used to pick up this coil. This is the only monitor point currently in use from this box. Additional points are available for future expansion that monitor the following TPS status:

- No redundancy
- On generator
- Bypass not available
- On battery
- TPS alarm
- On bypass
- Shutdown imminent

The SCM is connected to the TPS by the TB3 terminal block bracket located in the lower left of the TPS and it is connected to the DE–9 connection point. There is also a 120 Vac outlet in the lower left of the TPS. This is for the modem connection only. **It is only rated at .2 amps. Do not use this outlet for anything but the modem.**

3–2.7.10.2.2 Hydrogen Detector (UD60A10). There is a hydrogen detector installed in each TPMS shelter and also in the RDA shelter on TPS only installations. This detector has sensing levels of 1%

and 2%. At the 1% level, the detector will close a set of contacts that will activate the fresh air economizer damper in the environmental control unit (ECU). This action will allow fresh air to be circulated in the shelter and mix with and dilute the hydrogen. Once this level drops down to below 1%, the damper will return to the closed position. If the concentration of hydrogen increases and reaches the 2% level, the TPS will sound a local alarm, transfer the critical load to bypass, and shutdown. This will also activate building alarm #2, hydrogen detector shutdown.

WARNING

Because the level of hydrogen may have reached explosive levels, extinguish all smoking materials prior to entering the TPMS or RDA shelter when responding to TPMS alarms.

If the TPS shuts down on this condition, it will not restart automatically. A site visit to manually restart the unit will be required.

3–2.7.11 Transition Power Source Electrical Power Distribution. Refer to Figure 3–11, sheets 1 through 4, Simplified One–Line TPMS Schematic for this discussion. The name of the devices in this sequence will identify with the newer shelters. For a cross–reference to the alternate names, see paragraph 3–2.7.7. Three–phase, 208 Vac power is supplied to the TPS from the load side of the auto–transfer switch and a 200 amp fused disconnect in the engine generator shelter to the TPS input breaker (UIB) and to the maintenance bypass breaker (MBB). With the UIB closed power is sent to the TPS input. With the TPS output breaker (UOB) closed, TPS output is sent through the critical equipment contactor to the critical system secondary power distribution panel in the RDA shelter. The MBB is provided to isolate the TPS from electrical power for maintenance activities. Under this condition the MBB would be closed and the UIB and UOB would be open isolating the TPS. At the Missoula, MT, and Medford, OR, NEXRAD sites, power to the 200 amp input fused disconnect is from a 225 amp circuit breaker on the main power distribution panel. Refer to NWS EHB 6–550 or 6–553 for additional information.

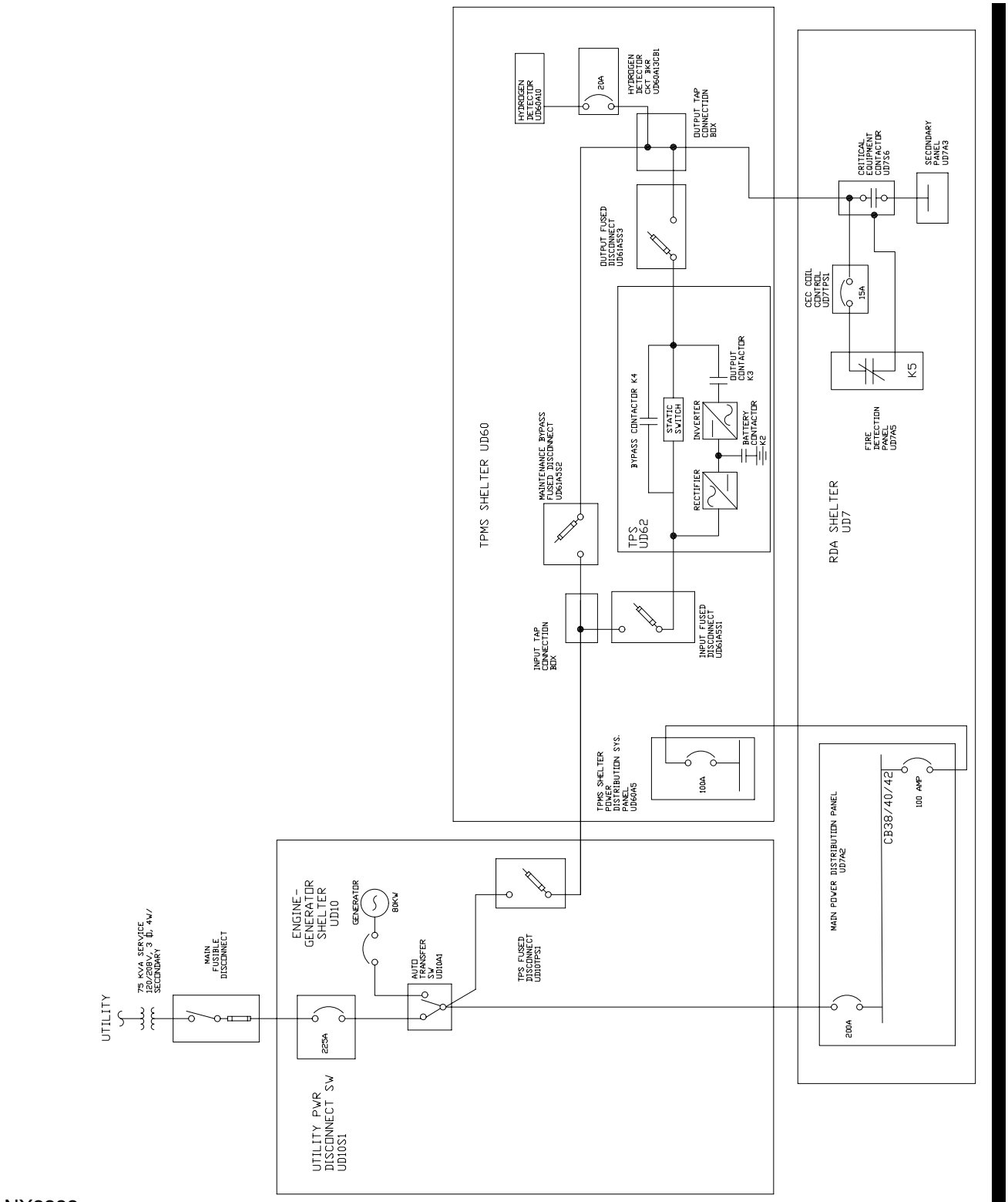

NX2282

Figure 3–11. Simplified One–Line TPMS Electrical Distribution (Type 1, 2, and 4 Shelters) (Sheet 1 of 4)

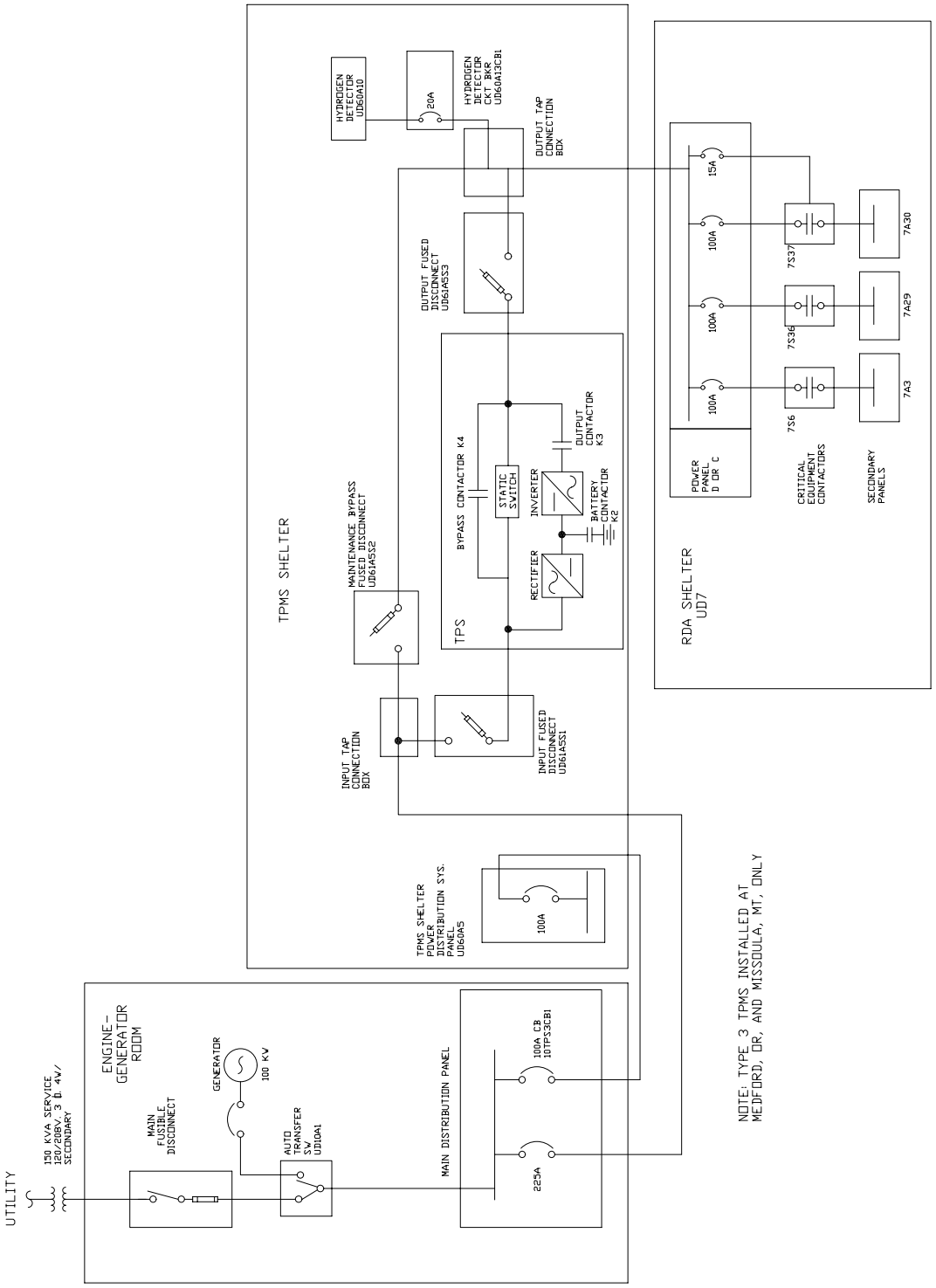

NX2283

Figure 3–11. Simplified One–Line TPMS Electrical Distribution (Type 3 Shelters) (Sheet 2 of 4)

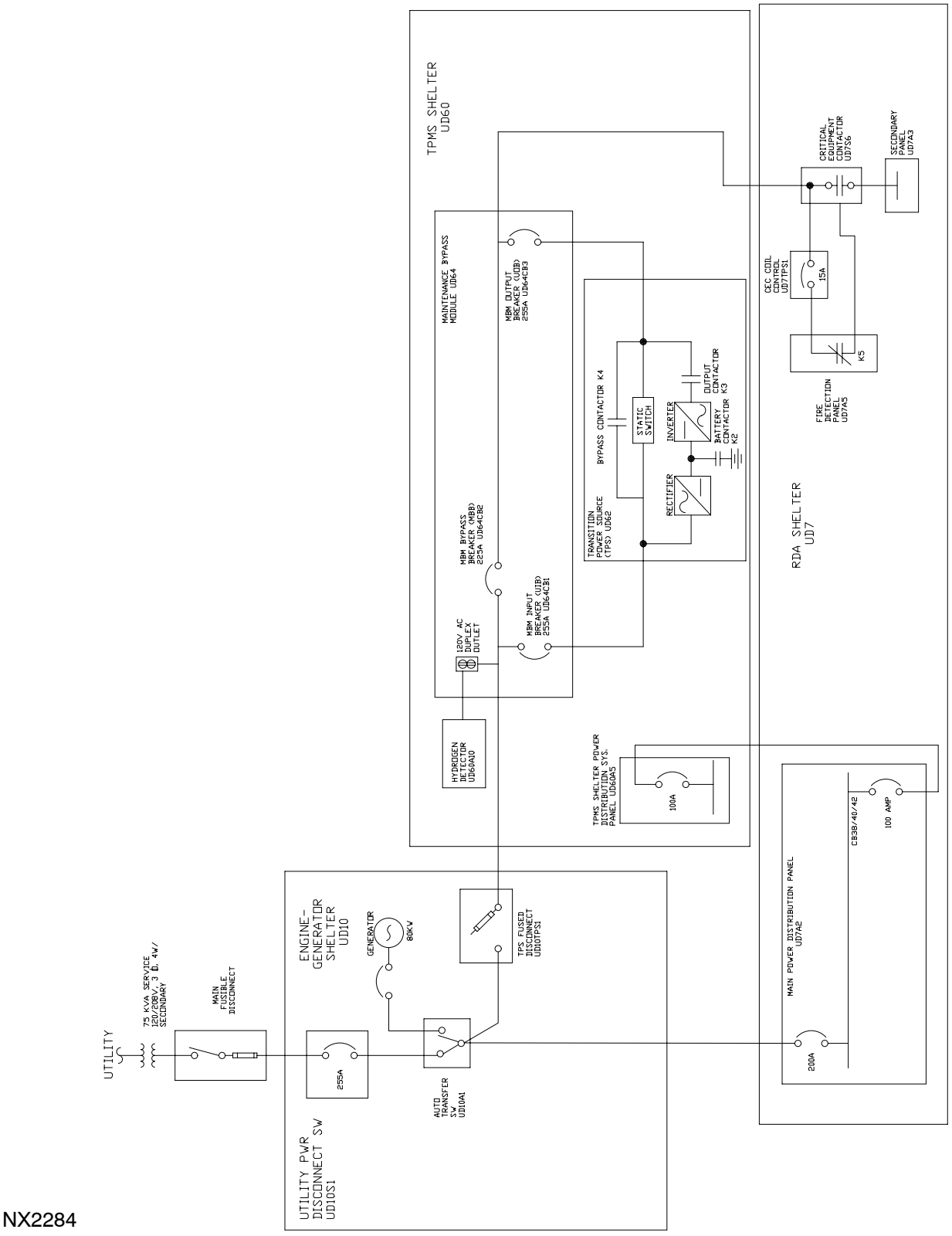

Figure 3–11. Simplified One–Line TPMS Electrical Distribution (Type 5, 6, and 9 Shelters) (Sheet 3 of 4)

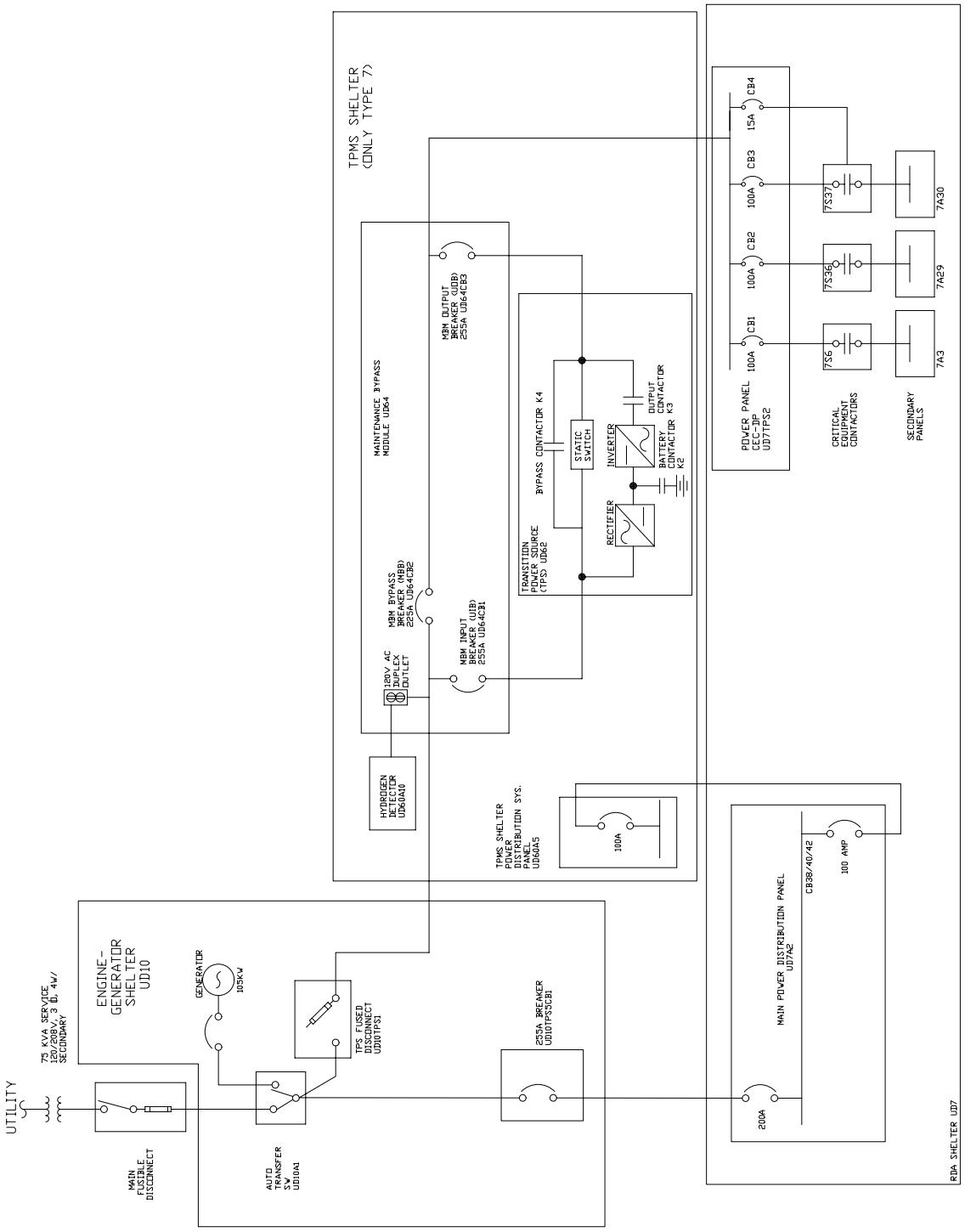

NX2285

Figure 3–11. Simplified One–Line TPMS Electrical Distribution (TPS Only and Type 7 Shelters) (Sheet 4 of 4)

3–2.8 REDUNDANT SYSTEM.

A redundant system offers an increased degree of operational reliability by providing backup RDA and RPG functions. There are two types of redundant systems, namely the FAA redundant system and the NWS redundant system. The FAA redundant system contains two collocated RDA groups and two RPGs, where each RDA group communicates with its associated RPG. One RDA/RPG channel is on–line (primary) while the other is in a powered–on standby (backup) condition. Changeover from one RDA/RPG channel to the other is controlled automatically or upon command from a distant MSCF. The NWS redundant system contains two collocated RDA groups, one RPG at the Weather Forecast Office, and a wideband communication switch that connects either RDA group to the RPG. One RDA is on–line while the other is in a powered–on, standby condition. Changeover from one RDA to the other is controlled automatically or upon command from a remote RDA maintenance terminal.

3–2.8.1 Redundant RDAs. Both FAA and NWS redundant systems have an RDA group that contains two RDA channels. The two channels share a common antenna/pedestal unit, UD2, which is located in Channel 2. The two channels are configured as follows:

	Channel 1	Channel 2
Antenna/pedestal Unit	–––	UD2
Radar transmitter	UD103	UD3
Radar receiver	UD104	UD4
RDADP cabinet	UD105	UD5
Waveguide pressurization unit	UD106	UD6

The output of either transmitter is switched to the antenna. The RF echoes received by the antenna are switched to the receiver associated with the on–line transmitter. The RDA data processor cabinet associated with the on–line transmitter drives the pedestal and processes the receiver signals. The off–line transmitter may be operated at full power into its dummy load. The off–line receiver may be operated using test signals injected into its receiver front end in the pedestal. The off–line RDA data processor cabinet controls both the off–line transmitter and receiver. In an FAA redundant system, it feeds and receives data from the off–line RPG.

3–2.8.1.1 Waveguide Components (UD1/UD7). The waveguide components are the same for each transmitter. However, the outputs of the waveguide switches are connected to produce one feed to the tower and antenna/pedestal. (UD103 is connected via UD3.) The dummy loads are controlled so that only one transmitter at a time is connected to the antenna/pedestal.

3–2.8.1.2 Antenna/Pedestal (UD2). The antenna/pedestal receives the switched output from the selected (on–line) transmitter. However, in the redundant configuration, the pedestal (UD2A1) contains a waveguide switch which is used to direct the RF echo through either of two receiver front ends. The receiver protector (UD2A3) and the low noise amplifier (UD2A4) feed the receiver (UD4). The receiver protector (UD2A7) and the low noise amplifier (UD2A8) feed the receiver (UD104). In addition, the two–way power splitter (UD2A6) is added at the elevation rotary joint. It routes the transmitted RF pulse to the power monitor (UD2A5) (which provides a power measurement to DAU UD5A3) and to the power monitor (UD2A9) (which is also added to provide transmitted power measurements to DAU UD105A3).

3–2.8.1.3 Radar Transmitters UD3 and UD103. The radar transmitter (UD103) is identical to the radar transmitter (UD3) (paragraph 3–2.2.3).

3–2.8.1.4 Radar Receivers (UD4 and UD104). Radar receiver UD104 is identical to radar receiver UD4 (paragraph 3–2.2.4).

3–2.8.1.5 FAA Redundant RDADP Cabinets (UD5 and UD105). For FAA redundant systems, the Channel 1 and Channel 2 RDAs are the same except that only the Channel 2 RDA (UD5) contains a pedestal power amplifier (A7), a pedestal digital control unit (A6), and a choke assembly (A25). Base data, status, and control data are exchanged between the RDA cabinet and its specific RPG. Both FAA RDA data processor cabinets contain an A/B switch, UD5A17 and UD105A17. When in the "B" position, the switch connects the RDA maintenance terminal (UD5A4 or UD105A4), to the RDASC system console port (UD5A12 or UD105A12). The "A" position is not used.

3–2.8.1.6 NWS Redundant RDADP Cabinets (UD5 and UD105). For NWS redundant systems, the Channel 1 and Channel 2 RDAs are the same except that the Channel 2 RDA cabinet (UD5) also contains an automatic A/B wideband communication switch (A19), a channel service unit (CSU) (A18), a pedestal digital control unit (A6), a pedestal power amplifier unit (A7), and a choke assembly (A25). The Channel 1 RDA cabinet (UD105) contains a dial port modem (A21) and STATMUX (A20). The automatic A/B wideband communication switch connects the RPG data processor wideband port (UD70A4) to either RDASC processor wideband port (UD5A1 or UD105A1). The CSU (UD5A18), converts the format of the wideband data from the automatic A/B wideband communication switch and sends it to the RPG which is located remotely from the equipment shelter. The dial port modem (UD105A21) and STATMUX (UD105A20) facilitate communication with the remote RDA maintenance console.

3–2.8.1.7 Remote RDA Maintenance Terminal. The remote RDA maintenance terminal enables operator control of NWS redundant systems. It consists of a dial–port modem (UD32A4), STATMUX (UD32A3), dual A/B switch (UD32A2), and remote RDA/RPG access terminal (RRRAT) equipment (UD32). (The RRRAT equipment consists of a monitor UD32A10, CPU UD32A9, keyboard UD32A11, and mouse UD32A13, which replaces the CDT–100 monitor UD32A1.)

The four–channel STATMUX receives the system and application ports of both NWS redundant RDA channels and demultiplexes them. The dual A/B switch (UD32A2) is controlled manually by an operator, and it switches the application and system ports of one of the channels to the terminal. The STATMUX (UD32A3) also statistically multiplexes signals from the terminal onto a single line that is sent to the RDAs via a dial–port modem (UD32A4). The dial–port modem communicates with a similar dial–port modem in NWS RDA Channel 1 (UD105A21).

3–2.8.2 FAA Redundant RPGs. FAA redundant systems contain two redundant RPG channels (Figure FO3–13). (NWS redundant systems have only one RPG.) The two FAA redundant channels are configured as follows:

	Channel 1	Channel 2
RPG Processor/Communications Assembly Cabinet	UD170	UD70

At the RDA site, one channel of each RDA maintenance terminal (UD5A4 and UD105A4) is connected to the RPG 1 and RPG 2 data processors. Each RPGPCA is connected to its

corresponding RDASC processor via a hardwire wideband link. The Channel 1 and Channel 2 RPGPCA cabinets (UD170 and UD70) are identical.

3–2.8.2.1 RPG Interprocessor Link. The two RPGs exchange information through an RPG interprocessor TCP/IP link. Information exchanged includes control data, status data, adaptation data, and state data.

3–2.8.2.2 Distant MSCF. FAA systems utilize a distant MSCF (UD71). It consists of the terminal suite (processor UD71A1, 21–inch monitor A2 , keyboard A3, and mouse A4), a backup storage device (UD71A6), surge suppressor (UD71E1), dedicated port modem (UD71A5), if frame relay service is not used, and a color printer (UD79A1). If frame relay service is used, a frame relay hub router (UD75A1) will be used to provide connectivity between the distant MSCF and the router in either channel. The operator can switch between RPG channels with the distant MSCF. The distant MSCF link is switched in the relay box (UD31), and then transmits to either the dedicated–port modem and router in each channel or to the frame relay CSU/DSU in the RPG router in each channel.

3–2.8.2.3 Relay Box. FAA redundant systems contain a relay box (UD31), which is used to switch narrowband lines from either RPG 1 or RPG 2 to associated, non–associated, and other users. The relays in the relay box are controlled by signals from the RPG processor of both channels. The processors use a DIO card to output control signals and receive contact status signals from the relay box.

Section 3–3. Functional Program Operation

3–3.1 INTRODUCTION.

This section provides an overview of the data processing functions that interface the operator with the radar.

3–3.2 GENERAL INFORMATION.

The WSR–88D system consists of a series of linked data processors. These processors operate in concert to transform operator requests into radar control commands, extract the base weather products from the radar data, transform the radar data into derived weather products, and to format and display these base and derived products in a manner easily interpretable by the operator. The processors which link the operator with the radar are:

3–3.2.1 RDA.

- Hardwired signal processor (HSP)
- Programmable signal processor (PSP)
- Status and control processor (RDASC)

3–3.2.2 RPG.

- Product generation processor

3–3.2.3 MSCF.

- MSCF processor

3–3.2.4 PUP.

- Display processor
- Graphics processor

An overview of the processor hardware interrelationships is provided in paragraph 3–3.3. Paragraphs 3–3.4 through 3–3.9 summarize the functions of these processors in terms of their operational program software (hardware in the case of the HSP). The operating system (OS), resident in the status and control, product generation, and display processors, provides system initialization and operation. It performs all real–time operating system functions, manages system environment, provides file management services, coordinates input/output requests for local devices or telecommunication facilities, schedules tasks, allocates memory, and handles interrupt/fault conditions.

3–3.3 PROCESSOR INTERRELATIONSHIPS.

The interrelationships between WSR–88D data processors are depicted in Figure FO3–14. The functions performed by these processors are briefly described in paragraphs 3–3.3.1 through 3–3.3.7.

3–3.3.1 HSP. The HSP receives digital video data from the radar receiver, and provides clutter filtering and system synchronization. Although the HSP stores clutter–map data for a complete radial, the HSP processes and outputs the time–series echo data on a (range) cell–by–cell basis.

3–3.3.2 PSP. The PSP receives time–series digital data from the HSP and develops the echo power, reflectivity, velocity, and spectrum width arrays. These arrays are sent to the RDASC processor where data base formatting is performed. Strong point clutter censoring and range unfolding are performed in the PSP. The PSP uses the first half–cut surveillance echo power array (which is stored in the RDASC from the previous scan and subsequently returned to the PSP) to perform the unfolding processing. Upon power turn on, and when commanded by the RDASC processor, the PSP transfers the microcode processing instruction routine from an internal electronically erasable programmable read–only memory (EEPROM) to RAM. The microcode provides the detailed instructions for all array processing routines. The PSP also receives a macrocode command instruction set, which consists of a sequence of calls to the microcode routines and passed parameters. It is used to direct signal processing of the selected mode, and includes synchronization and timing command sequences. The command macrocode is downloaded for each radial, and is stored in the ACU RAM. The PSP also receives clutter–map data on a radial–by–radial basis, which it sends to the HSP for clutter suppression processing. Upon RDA initialization, PSP memory is cleared and ACU and arithmetic unit (AU) tables are downloaded from the RDASC Processor.

3–3.3.3 RDASC Processor. The RDASC processor controls the operation of the radar. It generates control signals for the antenna positioning electronics, transmitter, receiver (via PSP/HSP), and auxiliary power generating system. It also gathers status data and fault alarms from the transmitter, receiver, antenna positioning electronics, microwave transmission system, and environmental sensors and utilities. The RDASC sends instructions to the PSP and data to the HSP. It adds header data and temporarily stores the echo power, reflectivity, velocity, and spectrum width data received from the PSP. Finally, the RDASC controls the wideband communication link to exchange data with the RPG processor. An optional Archive II function may be associated with the RDASC. The RDASC controls the storage or retrieval of base weather data as well as scan related data using this function.

3–3.3.4 RPG Processor. The RPG processor receives base data from the RDASC, performs velocity dealiasing and deobscuration to minimize range unfolding, processes the base data into base and derived weather products, stores the products in mass storage, and transmits the products to all users as required. The RPG processor also accepts and stores RDA and PUP status and error messages, notifies the PUP of any status changes of the RDA or RPG, provides RPG test mode during startup and an RPG restart after a momentary operation interrupt, and controls the RDA in remote operation. Within the processor is the Archive III function. Archive III receives and stores designated base and derived weather products and transmits requested products to the processor for distribution.

3–3.3.5 MSCF Processor. The MSCF processor, via the HCI, provides control for operation and monitoring of the RPG. It provides the operator interface necessary to carry out the control and status monitoring functions. It provides control over the RPG processing functions by permitting the selection of products to be routinely generated and a product subset to be archived. It also provides the interface to access the operating system, to initialize the RPG processor, and to perform first

level analysis of system malfunctions. The MSCF also monitors the narrowband connection to the PUP and the RDA operability and status via messages from the RDA. The MSCF displays the status and error messages. It provides limited operator control of the RDA.

3–3.3.6 PUP Display Processor. The PUP display processor receives requested products and RDA/RPG status from the RPG processor; it stores, processes, and displays the products, and edits, annotates, distributes, and archives designated products. It provides automatic restart after a power loss, as well as PUP status monitoring of the graphics processor, communication link, RDA, RPG, and weather modes. It provides an alert alarm for selected weather parameters within designated areas. The display processor sends base and derived weather products to the graphics processor for video generation. The display processor includes the Archive IV function, which stores and receives designated base/derived products for archiving. It sends requested archive data (products) to the graphics processor.

3–3.3.7 Graphics Processor. The graphics processor is a self–contained microprocessor dedicated to the generation of radar product video for display on the color graphics display monitors. It receives input data from the display processor and outputs video to the color monitors. The graphics processor also receives puck data from the graphics tablet in the PUP workstation. This data is transferred to the display processor. The purpose of the puck/tablet is to control the display and select radar products. The graphics processor also interfaces with a color graphics printer. The printer is used to make a hard copy of the designated color display at any time.

3–3.4 HSP FUNCTIONS.

The HSP (Figure FO3–15, sheet 1) receives raw radar data from the receiver, processes it, and outputs it to the PSP. The HSP prescaler function accepts the attenuated digital I, Q, and log video (serial data) signals, interference tag, and AGC (attenuation) data from the receiver. The prescaler uses the AGC data to rescale the I and Q video data to recreate the original signal amplitudes and formats the data. The HSP takes the I, Q, and log video data from the prescaler and processes it, in the clutter filter function, in such a way that ground clutter is filtered out. The filtering is performed on range cells containing ground clutter as specified by clutter map data received from the RDASC via the PSP. This filtering process is implemented in order to convert raw, cluttered data into valid base data. The valid base data is sent to the PSP.

3–3.5 RDA PSP SOFTWARE PROGRAM.

The PSP program (Figure FO3–15, sheet 1) performs signal processing functions directly related to the computation of base data reflectivity, Doppler velocity, and spectrum width estimates from filtered radar time–series samples. This program includes both PSP resident microcode, which performs low–level signal processing functions, and RDASC processor resident software, which is used to generate and update higher level control (macrocode) sequences that are then downloaded to, and executed by, the PSP during run time. The PSP program resides in an ACU in the form of microcode and macrocode. The PSP is slaved to the RDASC processor which is the control processor for the PSP.

3–3.5.1 PSP Major Events. The major events in PSP operation consist of the following:

3–3.5.1.1 Power Turn On. The power supply generates a power on reset which causes the PSP to enter an initialization mode.

3–3.5.1.2 Initialization. The RDASC processor downloads tables into AU memories and initiates or downloads PSP microcode into RAM. Parameters required by hardwired modules (HSP) are downloaded as required by the operational and test programs. Various registers and pointers are reset.

3–3.5.1.3 Start Elevation Layer. The RDASC processor downloads PSP macrocode (including macrocode parameters) and HSP module parameters and prepares the PSP to start processing upon receipt of the start of radial command (via the HSP) and issues a start command to the signal processor.

3–3.5.1.4 Radials. The PSP generates base data reports every radial. The azimuth extent (1.0 degree maximum) of a radial is specified by the RDASC processor in terms of the waveform pulse repetition time (PRT) and number of pulses per radial. The HSP generates the PRT waveform, A/D clocks, and radial clocks. The PSP base data function is organized around radials. The PSP radial timing is synchronized by radial clocks generated by the HSP. PSP programming tasks define the processing to be performed on each radial.

3–3.5.2 PSP Processing Modes. Four PSP processing modes are provided for the generation of base data:

3–3.5.2.1 Contiguous Surveillance Waveforms. Contiguous surveillance waveforms are designed to provide reflectivity estimates on low elevation layers where good clutter filtering is essential and where long unambiguous range is required. The contiguous surveillance processing mode generates the surveillance reflectivity array and the surveillance echo power array. Both are sent to the RDASC processor each processing radial. The surveillance echo power arrays are stored in the RDASC processor for an entire elevation layer scan and then sent back to the PSP, radial by radial, while the PSP processes the same elevation layer with continuous Doppler waveforms. The PSP employs the surveillance echo power arrays to resolve range ambiguities in the Doppler data.

3–3.5.2.2 Contiguous Doppler Waveforms with Range Ambiguity Resolution. Contiguous Doppler waveforms are employed to provide velocity and spectrum width arrays at low elevation where range ambiguity resolution is required. Range ambiguity resolution employs the surveillance echo power array fed back to the PSP from the RDASC processor, radial by radial.

3–3.5.2.3 Contiguous Doppler Waveforms without Range Ambiguity Resolution. Contiguous Doppler waveforms are employed to provide Doppler reflectivity, velocity, and spectrum width arrays at high elevations where Doppler waveforms are range–unambiguous.

3–3.5.2.4 Batch Waveforms. Batch waveforms contain both surveillance and Doppler pulse trains within each radial in order to allow resolution of range ambiguities during a single elevation cut. It is used where the high degree of clutter suppression possible with contiguous waveforms is not required. The signal processing essentially the same as that performed during the other waveform modes.

3–3.5.3 Signal Processing Modes. The signal processing program performs eight functions which are discussed in paragraphs 3–3.5.3.1 through 3–3.5.3.8, respectively.

3–3.5.3.1 Process Surveillance Time–Series. This function is performed whenever the RDA executes a surveillance waveform elevation cut. Such an elevation cut is generally performed at a

low elevation angle as part of a split cut consisting of a surveillance waveform cut followed immediately by a range–ambiguous Doppler waveform cut. The time–series data sampled during a radial of the surveillance waveform cut are used to compute the radial's reflectivity base data array and surveillance echo power array. The latter is stored at the RDASC for approximately one elevation cut's time, after which it is fed back to the PSP to permit range unfolding of the corresponding radial of the subsequent Doppler cut.

3–3.5.3.2 Process Range–Ambiguous Doppler Time–Series. This function is performed whenever the RDA executes a range–ambiguous Doppler waveform cut as part of a split cut. The time–series data gathered during a radial of such a cut are used to compute the radial's Doppler velocity and spectrum width base data arrays. Surveillance echo power data gathered during the first half (i.e., the surveillance waveform cut portion) of the split cut are fed back to the PSP to be used for range unfolding. No reflectivity base data is computed during the Doppler cut because the required data was generated during the surveillance cut.

3–3.5.3.3 Process Doppler Time–Series. This function is performed whenever the RDA executes a range–unambiguous Doppler waveform cut. This is performed at relatively high elevation angles, where there is little likelihood of multiple–time–around returns from Doppler waveforms. This function produces a full complement of base data; reflectivity, Doppler velocity, and spectrum width.

3–3.5.3.4 Process Batch Time–Series. This function is performed whenever the RDA executes a batch waveform elevation cut. This is normally performed at intermediate elevation angles, where multiple–time–around returns can occur for Doppler waveforms, but where the degree of clutter suppression achieved in split cuts is not necessary. This function produces a full complement of base data; reflectivity, Doppler velocity, and spectrum width.

3–3.5.3.5 Measure Bias and Noise Power. This function is normally performed as part of an online calibration sequence executed during transitions between elevation cuts. It estimates average signal bias and average power due to bias and noise on I, Q, and log channels.

3–3.5.3.6 Measure Gain and Balance. This function is normally performed as part of an on–line calibration sequence executed during transitions between elevation cuts. It computes the fundamental Fourier coefficients of the series of samples formed by holding the range–bin index constant while increasing the sweep index. The coefficients are used to determine the gain and balance of I and Q channels at various AGC settings.

3–3.5.3.7 Collect Input Data. This function is normally performed offline in support of testing. To perform this function the PSP transfers a block of time–series data to the RDASC program.

3–3.5.3.8 Initialize PSP. This function is performed as a part of system start/restart to initialize the PSP. It causes the AU tables and coefficient memory data to be downloaded from the RDASC computer to the PSP AU memory and coefficient memory, respectively, and the initialization of AU memory.

3–3.6 RDASC PROCESSOR SOFTWARE PROGRAM.

The RDASC program (Figure FO3–15, sheet 1) is used to control real time operation of the Doppler radar and to extract base weather data from the radar data. It monitors and assesses the performance

of the RDA, initiates automatic calibration, performs calibration calculations, and reports RDA status to the RPG. It formats reflectivity, mean radial velocity, and spectrum width data input from the programmable signal processor, attaches header data, and initiates data transfer to the RPG. The program provides the capability to operate under local control or unattended remote control. Under local control it sets RDA mode, performs the various turn–on and shutdown procedures, based on control inputs from the RDA maintenance terminal or FAA RMS, if installed. Under unattended remote control, the same operations are performed in response to the control inputs from the MSCF in the RPG. Under normal remote control operation, the scan pattern to be executed, waveform types, pulse repetition periods, pulse widths, and other control parameters are supplied by the RPG program. The RDASC program generates the pedestal control commands, closes the position loops of the pedestal, and serves as the control processor for the programmable signal processor. This program is composed of nine (9) functions which are discussed in paragraphs 3–3.6.1 through 3–3.6.9, respectively.

3–3.6.1 Handle Maintenance Terminal. The handle maintenance terminal function provides the interface between the program and the RDA maintenance operator. Maintenance operator communication to the program is primarily through the alphanumeric keyboard and display (maintenance terminal), although provision is also included for switch/lamp inputs and outputs. The tower/utilities and transmitter data interfaces are provided through the data acquisition unit.

3–3.6.2 Monitor and Calibrate RDA. The monitor RDA and calibrate function assembles status and performance data from each item of equipment for the RDA. The data may be direct sensor outputs or derived in other program functions, such as dynamic response of the control pedestal function. It determines the ordering and sequence of calibration, status, and performance monitoring tests (particularly those which cannot be performed simultaneously with normal radar data gathering activities), calculates required calibration parameters, issues status messages and alarms, and initiates their transmission to the maintenance terminal display and the RPG.

3–3.6.3 Form RDA Data. The form RDA data function assembles data to be output on the wideband communications links, inserts required header data, generates the associated data parameter blocks, and passes the data parameter block to the handle wideband function for data transmission. The form RDA data function creates a parameter list for the data to be transmitted, which specifies the address of the data segments to be assembled for the data set. The form RDA data function generates a header for the data. The header data includes message size, message type (i.e., base data, status, performance data, console message, wideband loop back test, and clutter filter bypass map), an identification sequence number, a date and time tag, the number of separate message segments that make up the data message, and the individual segment number. Other header information for base data includes pedestal angle positions and a calibration parameter. This calibration parameter is derived from the automatic calibration routines and is included as a part of the radial data processing parameters supplied to the PSP by the control signal processor function. The value included in the header is that value used by the PSP in calculating the reflectivity data for that radial. It also designates the destination of the data. Base data enabled for transmission to the RPG is sent to an external user whenever the wideband link to the external user is configured and open. Status and alarms are always transmitted to the RPG whenever the link is open and the FAA RMS is installed. Maintenance data specified by operator inputs or RPG inputs are also transmitted when the link is open. Only high level status data is automatically transmitted over the wideband communications link to the user. The form RDA data function starts and stops meteorological base

data transmission over the wideband communications link in accordance with the enable data transmission command generated in the control RDA function based on RDA maintenance terminal and RPG inputs – as well as stores base data and status data on Archive II medium as specified by the control RDA function based upon RDA maintenance terminal and RPG inputs. Base data includes synchronization and calibration data required to interpret the data. Status data is interleaved with base data on the archive medium in the same manner that base data and status data are transmitted to the RPG. Base data retrieved from the Archive II medium by the form RDA data function is passed to the handle wideband function for playback to the RPG and user (if configured) as specified by the control RDA function based upon RDA maintenance terminal and RPG inputs. Playback of the base data is synchronized for real time operation. All base data moments that were enabled for recording are sent to the handle wideband function for transmission to the RPG and user (if configured) during playback, independent of whether or not they're enabled. Status of the Archive II function is displayed at the RDA maintenance terminal and distributed to the handle wideband function for transmission to the RPG. Archive status includes; installed, checking label, fast forward, loaded, and record.

3–3.6.4 Handle Wideband Data. The handle wideband data function controls the wideband interface to the RPG, the optional wideband data link to an external user, and the optional level II archiving. It also monitors the status of the wideband data links, passing this information to the monitor RDA hardware function, and passing on requests for special interface tests to the wideband link hardware. The data transferred to the RPG includes base data with headers, summary RDA status data, RDA status alarms, and detailed RDA calibration, performance and status information (maintenance data) either upon request, or as scheduled through adaptation data. Data transmitted over the wideband data link to the external user includes base data with header, and summary status. Maintenance data is not normally transmitted over this link. Data transferred to Level II Archiving includes base data with headers, RDA status data, and metadata (such as calibration data, clutter maps, etc). Data input to the RDA from the RPG includes mode and RDA function commands, volume scan program data, clutter map and clutter suppression control data, maintenance and RDA status requests. The handle wideband data function performs the three functions of handle wideband link, transmit wideband data, and receiver wideband data:

3–3.6.4.1 Handle Wideband Link Function. The handle wideband link function executes a software loop–back test. The link is deemed operational if the bit pattern transmitted matches bit pattern received. The loop–back test is initiated automatically upon RDA startup and restart, communications link reinitialization, and periodically, as required, by the periodicity defined by RDA adaptation data.

3–3.6.4.2 Transmit Wideband Data Function. The transmit wideband data function receives the message header and data pointer list from the form RDA data function. This function initiates the data transmission over the link.

3–3.6.4.3 Receive Wideband Data Function. The receive wideband data function, when notified by handle wideband link that a message has been received, reads the header information of the incoming data for the data type and destination. The control RDA function is to be notified by this function that data is available.

3–3.6.5 Control RDA. The control RDA function provides RDA mode control, configuration and status control, and coordinates the operations of the other RDASC program functions, providing

the coarse timing of the RDA. (The fine grain timing is provided by the synchronizer function of the HSP under the control of the RDASC program.) This function sets the RDA modes based on inputs from RDA control and/or RPG, enables and disables base data transmission over the wideband data links, and specifies data to be Level II Archive and RDA configuration. It includes the startup, restart and shutdown sequence, and power loss and recovery sequences. At a lower level of control, this function coordinates RDA operations, sequences the volume scan pattern, directs the pedestal angle control, specifies signal processing control and waveform parameters, and initiates calibration and performance monitoring checks during elevation transitions (primarily the top to bottom transition).

3–3.6.6 Control Signal Processor. The control signal processor function generates and assembles the control commands, parameters and data required for proper functioning of the components of the HSP, PSP, and receiver. It serves as the interface between the RDASC processor and the PSP/HSP, initiates output of the above control data, and input of base, BIT, calibration and test data from the components serviced by this interface.

3–3.6.7 Control Pedestal. The control pedestal function provides the immediate control of the pedestal, and serves as the I/O interface to the antenna/pedestal. The following control functions are provided for each axis:

- Move to and maintain a specified angle position
- Slew to a specified position
- Achieve and maintain a specified angle rate

The status of the pedestal is controlled and monitored, and status information is passed to the control RDA function. The dynamic performance of the pedestal angle loops is monitored and results passed to the monitor RDA hardware function. The BITE flag and sensor data are passed to the monitor RDA Hardware function.

3–3.6.8 Handle Remote Monitoring System. The handle RMS function applies only to FAA redundant radars with RMS hardware installed. This function allows an operator at an FAA RMS terminal to control the radar and make data requests.

3–3.6.8.1 Processing. Handle RMS system performs the following functions: handle RMS link, transmit RMS data, receive RMS data, and handle RMS commands and data requests.

3–3.6.8.2 Handle RMS Link. The handle RMS link function interfaces with the RMS communications equipment (CI–06) via the operating system and via direct memory transfers to send and receive data and to control and monitor the RMS equipment. The handle RMS link function provides the capabilities necessary to establish communication links and to control transfer of data between the RMS link interface and the other functions of CPCI–01. Adaption data specifies whether an RMS link is configured. Handle RMS link performs the following steps as part of an RDA cold startup on FAA redundant systems (based on adaptation data).

- Initialize RMS communications equipment
- Issue connect command to RMS link

- When links are connected perform RMS loop test
- Send RDA adaptation data (on non–controlling channel only)

In the event an RMS link initialization error occurs, an automatic re–initialization occurs within two (2) volume scans.

3–3.6.8.3 Transmit RMS Data. The transmit RMS data function receives the message header and data pointer list from the form RDA data function when data is ready to be transmitted. This function initiates the data transmission over the link including message header data as specified in the RDA/RMS ICD.

3–3.6.8.4 Receive RMS Data. When notified by handle RMS link that a message has been received, this function notifies the control RDA function that data is available.

3–3.6.8.5 Handle RMS Commands and Data Requests. This function provides for the initial processing of control commands and requests for data received from the FAA RMS console operator.

3–3.6.9 Handle RDA Interprocessor Link. In the redundant configuration, two complete transmitter–receiver–RDA control channels are provided with only pedestal/antenna and tower/utilities in common. To the extent feasible, the two channels are configured to operate independently. Interconnections and added switching include an interprocessor link connecting the RDASC processors. This interface provides the means of passing data between the two RDA processors in the redundant configurations.

This interconnection allows mode state data to be requested and passed between processors. Data is transmitted across the interface in either direction. Data transmitted between the two processors consists of interprocessor commands and interprocessor status data. Interprocessor status data is transmitted only in response to an interprocessor command.

Interprocessor channel input/output errors are reported by alarm “REDUN CHAN INTERFACE I/O STATUS ERROR,” displayed at the RDA maintenance console and MSCF terminal. Each channel operates independently with the following exceptions and added considerations:

1. Prior to entering OPERATE, the RDASC sends a status request command to the other channel (via the interprocessor link) to determine whether it is in OPERATE. If the other channel is in OPERATE, the RDA returns to the state present at the time the command to OPERATE was received and issues alarm “UNABLE TO CMD OPER–REDUN CHAN ONLINE.” Lack of response within two seconds is interpreted as not being in the OPERATE state. If this interrogation determines that the other channel is not in OPERATE, the RDA continues the transition to OPERATE sequence.

2. The COMMAND OTHER CHANNEL TO STANDBY command is sent from the RPGDP to the RDASC over the wideband link as part of the RDA control commands message. Upon receipt of the COMMAND OTHER CHANNEL TO STANDBY command from the RPG, the RDA relays the command to the other channel via the interprocessor link. The RDA enters the STANDBY STATE when

this command is received from the other channel if in REMOTE CONTROL or in LOCAL CONTROL with REMOTE CONTROL ENABLED, and returns status indicating acknowledgement. Normally, this command is issued by the MSCF operator when the link between the other channel and its RPG channel is broken, and the other channel is connected to its wideband user or Archive II recording is active. If the RDA is in LOCAL CONTROL and REMOTE CONTROL is not enabled and COMMAND OTHER CHANNEL TO STANDBY is received via the processor link, the command is rejected and a status message is returned indicating the rejection. If the other channel rejects this command, alarm "INTERPROCESSOR STBY COMMAND REJECTED" is set. If the other channel does not acknowledge this command, alarm "NO INTERPROCESSOR COMMAND RESPONSE" is set. If the other channel accepts the command, the REDUNDANT CHANNEL STANDBY COMMAND ACCEPTED status is sent to the RPG.

3. The receiver waveguide switch is controlled only from Channel 2 via the Channel 2 command, and follows to the same position as the Channel 2 pedestal control, i.e., when Channel 2 has pedestal control, the receive waveguide switch will connect the antenna receiver port to the Channel 2 RFE input. In the event the receiver waveguide switch is not connected to the channel in OPERATE, alarm "RDA CHANNEL CONTROL FAILURE" is set.

4. Interprocessor status data is passed to the other channel upon request. The RDA requests status from the other channel at least once every scan sequence to monitor the interprocessor link status. Interprocessor channel response status is included in RDA performance data.

5. The controlling channel controls the pedestal. The non–controlling channel will be unable to communicate with the pedestal; therefore the non–controlling channel inhibits monitoring of the pedestal status. Pedestal control switching is performed from Channel 2 through the maintenance console interface. When Channel 2 is de–energized, control will be from Channel 1.

3–3.7 RPG SOFTWARE PROGRAM.

The RPG program (Figure FO3–15, sheet 2) is an operator–interactive computer program which operates in a multiprocessing environment. Once started, the RPG program functions primarily unattended; however, operator control can be exercised directly or by setting adaptation data. The RPG program processes radar data to generate products containing information on related meteorological phenomenon. These products can be stored, archived, and distributed to the system users. The RPG program is divided into four major functions which are discussed in paragraphs 3–3.7.1 through 3–3.7.4, respectively.

3–3.7.1 Acquire Radar Data. The acquire radar data function interfaces with the RDASC via a bidirectional wideband link to receive base data and to transmit RDA control information. In addition it provides for the distribution of base data to an (optional) user site.

3–3.7.2 Generate Products. The generate products function performs velocity dealiasing and transforms the dealiased base data into the following three types of products (which are discussed in paragraphs 3–3.7.2.1 through 3–3.7.2.3) in response to requests from users or the RPG operator:

3–3.7.2.1 Base Products. Base products are direct representations of the base data which have been reduced in range, resolution, or both in order to accommodate display limitations. These products include the following:

- Base reflectivity
- Base velocity
- Base spectrum width

3–3.7.2.2 Derived Products. Derived products are produced from algorithm outputs, from window extractions of the base data, from compositing of the base data, or from some combination of the above. These products include the following:

- Combined sheer
- Shear contour
- Composite reflectivity
- Composite reflectivity contour
- Echo tops
- Echo tops contour
- Severe weather analysis display
- Severe weather probability
- Velocity azimuth display winds
- Combined moment
- Cross section
- Weak echo region
- Storm relative mean radial velocity
- Vertically integrated liquid
- Storm tracking information
- Hail index
- Tornado vortex signature
- Mesocyclone

- Storm structure
- Layer composite reflectivity
- Surface rainfall accumulation
- Storm total rainfall accumulation
- Hourly digital precipitation array
- Supplemental precipitation data
- Hybrid scan reflectivity
- Digital hybrid scan reflectivity
- Layer composite reflectivity –AP removed
- Composite reflectivity –AP edited
- ITWS digital velocity product

3–3.7.2.3 Alphanumeric Products. Alphanumeric products are produced from algorithm outputs, alert procedures, and MSCF inputs. These products include:

- User alert message
- Radar coded message
- Free text message

3–3.7.3 Distribute Products. The distribute products function provides for the distribution of products to associated users (AWIPS, PUP, OPUP, WARP), non–associated users (OPUP and PUP), other users, and for the on–line storage and archiving of products. It performs three tasks which are discussed in paragraphs 3–3.7.3.1 through 3–3.7.3.3.

3–3.7.3.1 Store/Retrieve Products. The store/retrieve products provides for the storage and retrieval of product data to and from on–line storage or archive files.

3–3.7.3.2 Transform Products. The transform products provides for the formatting of product data, prior to transmission to users.

3–3.7.3.3 Handle Communications. The handle communications provides the processing necessary to establish and terminate communication links and control transfer of data between the link interfaces and other functions within the radar product generation processor.

3–3.7.4 Control System. The control system function performs system control tasks including:

3–3.7.4.1 Unit Control. The unit control supports the interface between the operator and the display and data entry equipment located at the MSCF.

3–3.7.4.2 System Monitor. The system monitor provides the on–line performance monitoring of the RDA, RPG, associated users, and each communication interface.

3–3.7.4.3 Processing Control. The processing control coordinates and schedules RPG operational program tasks, and provides for the allocation of the RPG resources to these tasks.

3–3.8 PUP DISPLAY PROCESSOR SOFTWARE PROGRAM.

The display processor program (Figure FO3–15, sheet 2) supports the display of weather products at PUP and RPG operational positions. The program controls the request and receipt of products from RPGs, locally stores the products, and controls the display of the products in accordance with operator instructions. The products can be manually annotated by the operator and they can be archived and distributed via communications interfaces to external users. The program also provides performance and status monitoring functions and exercises overall control over the operational position. It will perform the set of system functions allocated to this software program, as specified herein, while running in the display processor major component of the PUP equipment. This program is an on–line, real–time operator interactive computer software program. This program provides four system–level functions which are discussed in paragraphs 3–3.8.1 through 3–3.8.4.

3–3.8.1 Interface with Operator/Trainee. The interface with operator/trainee function receives and interprets all operator entries and generates commands to the appropriate functions to control execution of the operator commands.

3–3.8.2 Monitor System Performance. The monitor system performance function provides on–line performance monitoring of the RDA, RPG, and communications functions based on data received from the RPG. The function provides on–line performance monitoring and fault localization functions for the operational position equipment.

3–3.8.3 Process Weather Products. Process weather products function performs four basic functions:

3–3.8.3.1 Handle Communications. The handle communications function supports the interface between the PUP and the RPGs and other users via the serial communications lines.

3–3.8.3.2 Annotate Weather Products. The annotate weather products function accepts operator–inputted graphical and text information from the Interface with operator/trainee function, creates weather product annotations, and updates background maps.

3–3.8.3.3 Form Weather Products. The form weather product function encompasses the major display processing performed on weather products within the operational position. The format conversion serves to provide compatibility between the graphics display formats used by the store/retrieve weather data function and all formats used by the communication links.

3–3.8.3.4 Store/Retrieve Weather Data. The store/retrieve weather data function manages the product files on the mass storage device and the archive device.

3–3.8.4 Display. The display function supports the operator interface with the PUP workstation display devices:

3–3.8.4.1 Graphics Processor. (color graphics displays and color graphics printer)

- Product display

- Weather product
- Background map
- Product annotation
- Product overlay
- Color table
- Cursor position

- Magnification
- Filter/combine
- Quarter screen
- Time lapse
- Hard copy

3–3.8.4.2 Alphanumeric Terminal.

- Operator typed data
- Menus
- Help files
- Status data
- Alphanumeric products

3–3.8.4.3 Audible Alert. The audible alert discretes suitable for control of alert mechanism.

3–3.9 GRAPHICS DISPLAY PROCESSOR SOFTWARE PROGRAM.

The graphics display program consists of two main components. The primary component is the graphics display processor program resident in the graphics display processor firmware. The second component is the graphics system device driver which resides in the display processor (host computer).

3–3.9.1 Graphics Display Processor Program. The graphics display processor program component interprets and decodes instructions, commands, and data sent from the host computer through the high–speed 16 bit interface. The program executes the received instructions to perform tasks which include the following:

3–3.9.1.1 Primitives. The graphics display processor program allows for drawing of primitives directly into the graphic system refresh memory. Primitives include lines, text, special symbols, circles, and erased windows. Weather radar images, background maps, and overlaps consist of primitives.

3–3.9.1.2 Attributes. The control of attributes affects the display of primitives. Attributes include window size and foreground color. Attributes allow data to be constrained to specific windows and allow control of line and text color.

3–3.9.1.3 Coordinate Transformations. The control of coordinate transformation scales, translates, and rotates data as it is written into refresh memory. Background maps, for example, are displayed at various scales through coordinate transformation.

3–3.9.1.4 Video Functions. The manipulation of video functions controls the appearance on the color monitor of data in refresh memory. Video functions include pan, zoom, and color look–up table control.

3–3.9.1.5 Cursors, Graphics Tablet and Color Printer. Finally, the graphics display processor program provides for control of cursors, the graphics tablet, and the color printer. The graphics display processor program returns data to the display processor upon request over the high–speed 16–bit interface. Data sent to the host includes cursor coordinates and graphics tablet coordinates and status.

3–3.9.2 Graphics System Device Driver. The graphics system device driver program component provides the software interface between the display processor and the graphics display processor. The driver resides with the display processor operating system and supports high–speed 16–bit bidirectional data transfer.

Section 3–4. Functional Operation of Electronic Circuits

The functional operation of electronic circuits is described in the equipment group technical manuals.

Section 3–5. Functional Operation of Mechanical Assemblies

The functional operation of the antenna/pedestal is described in the antenna positioning system technical manual.

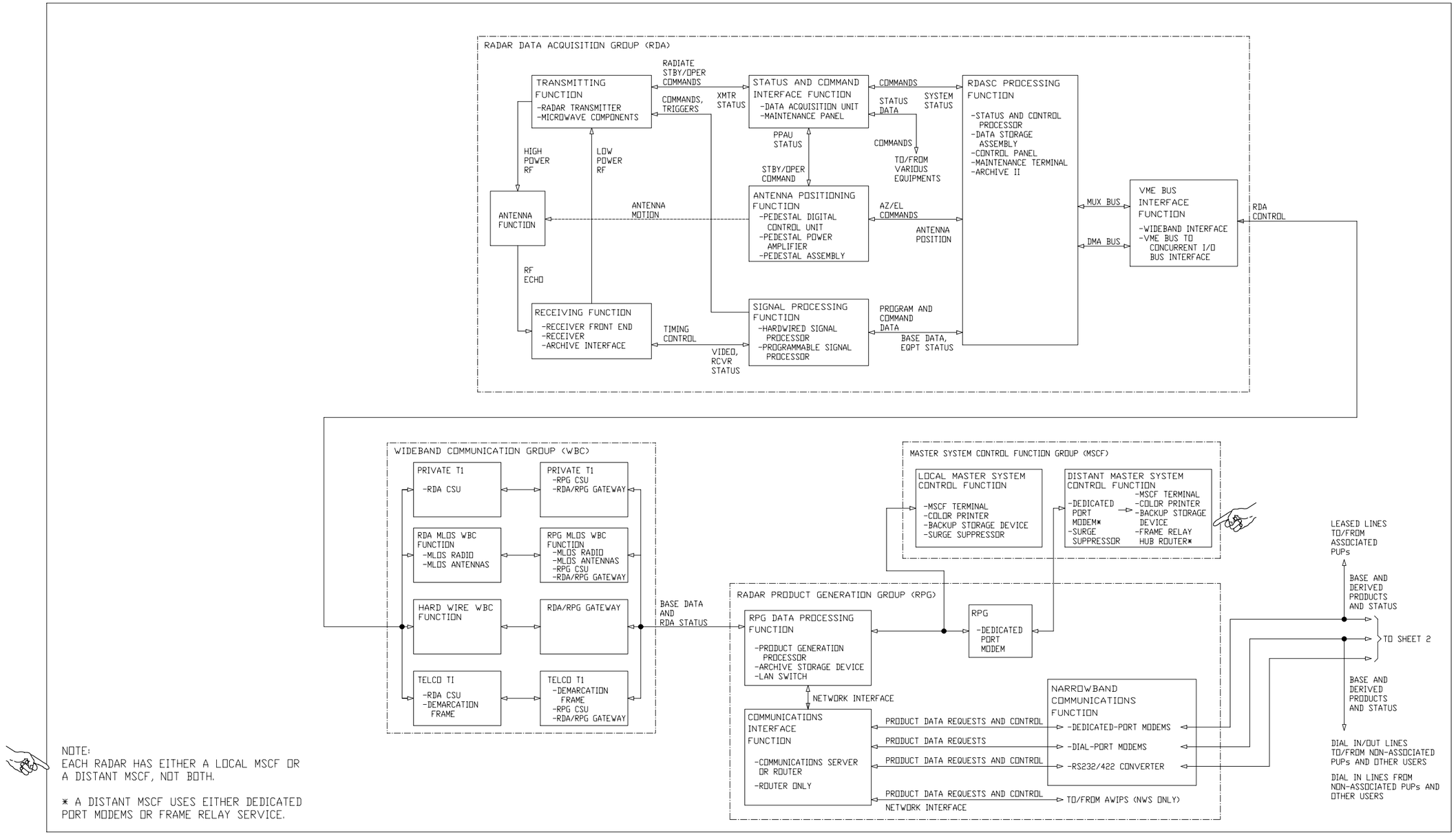

Figure FO3–1. Nonredundant System, Operational Equipment Groups, Simplified Functional Block Diagram (Sheet 1 of 2)

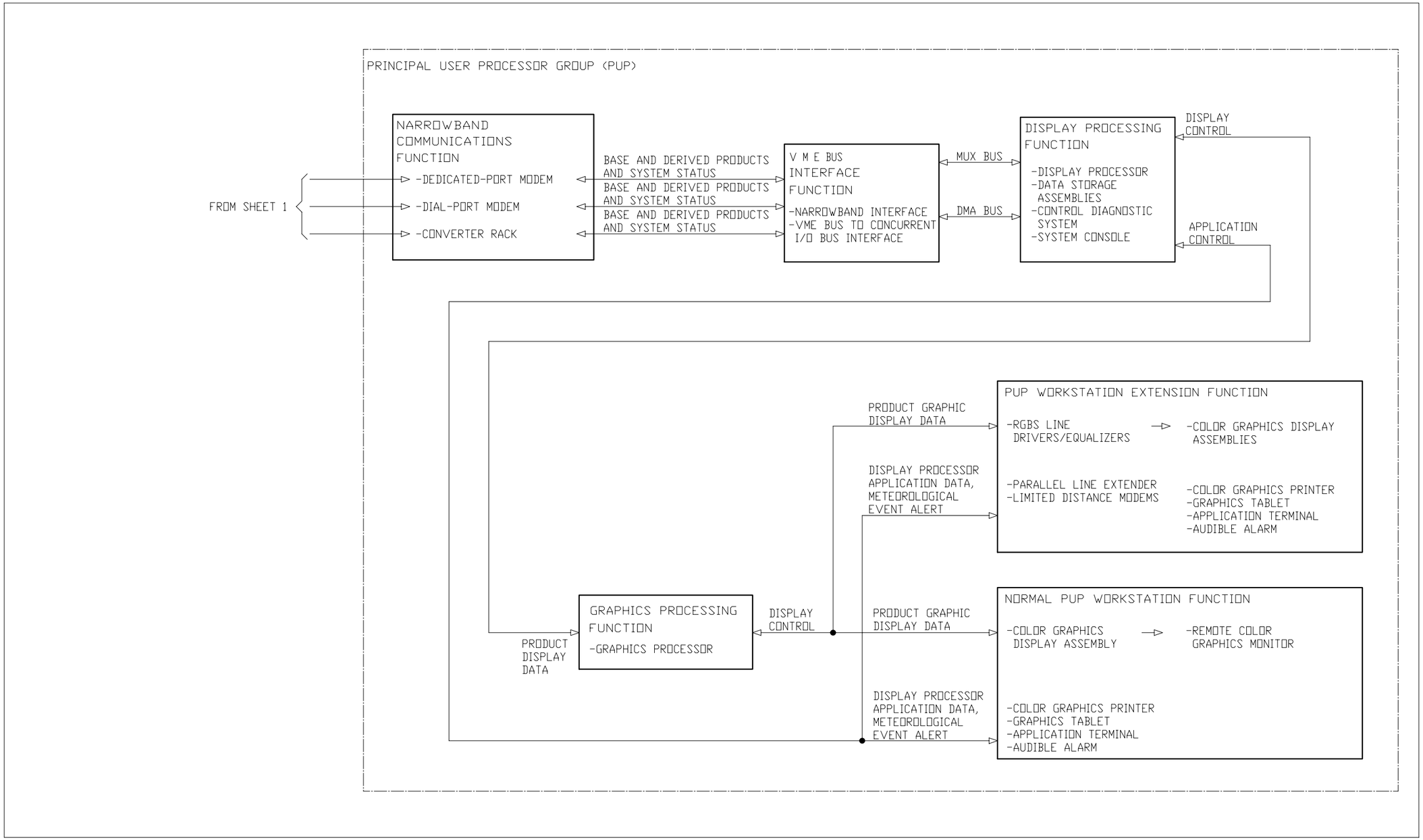

NX1573

Figure FO3–1. Nonredundant System, Operational Equipment Groups, Simplified Functional Block Diagram (Sheet 2 of 2)

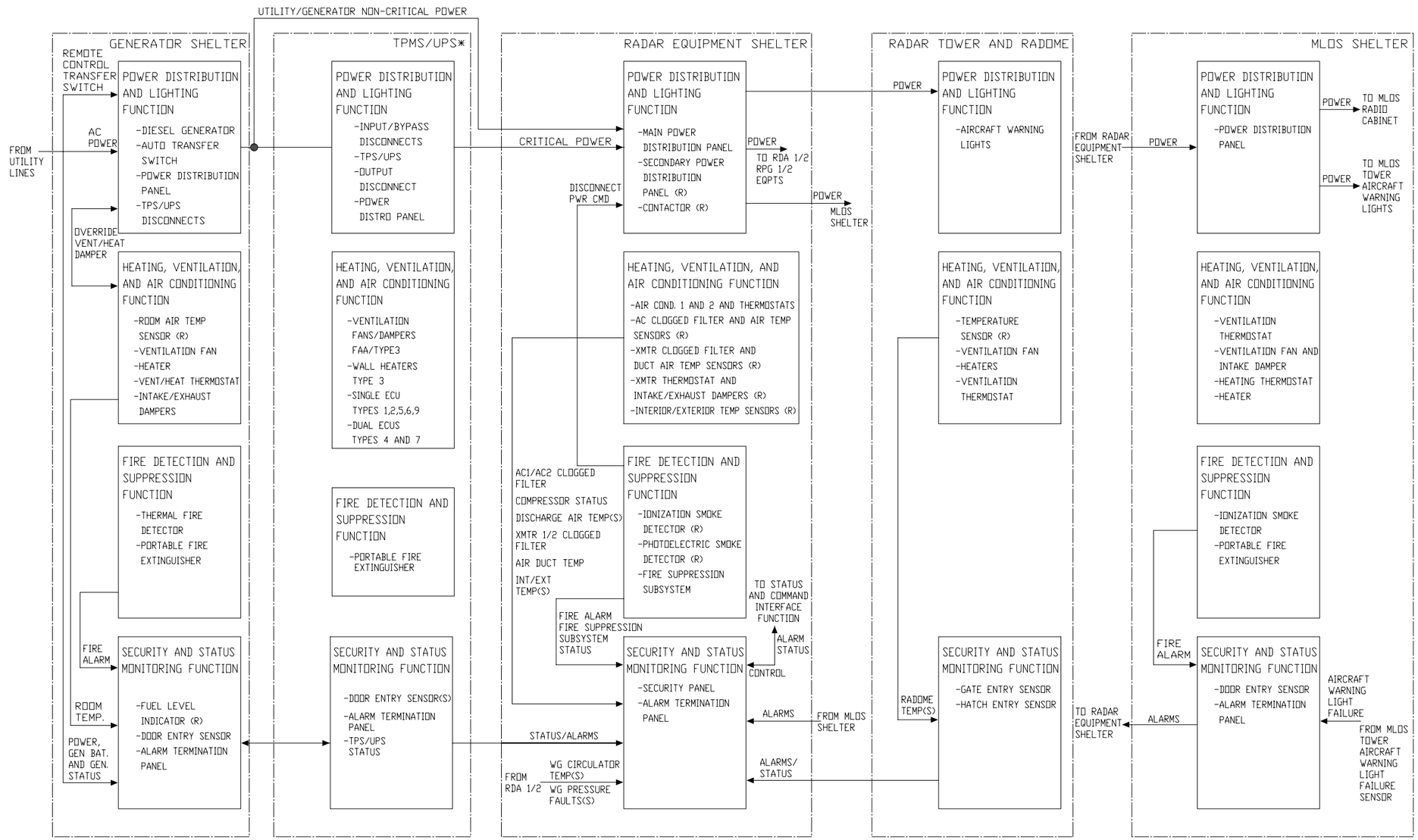

NOTE:
(R) = INDICATES DUPLICATED IN A REDUNDANT SYSTEM

* INCLUDES TPMS AT NWS/DOD SITES, TPS ONLY AT SELECTED NWS REDUNDANT SITES, AND FAA'S UPS SYSTEM IN GEN MODULE.

NX1574

Figure FO3–2. Real Property Installed Equipment Group, Simplified Functional Block Diagram

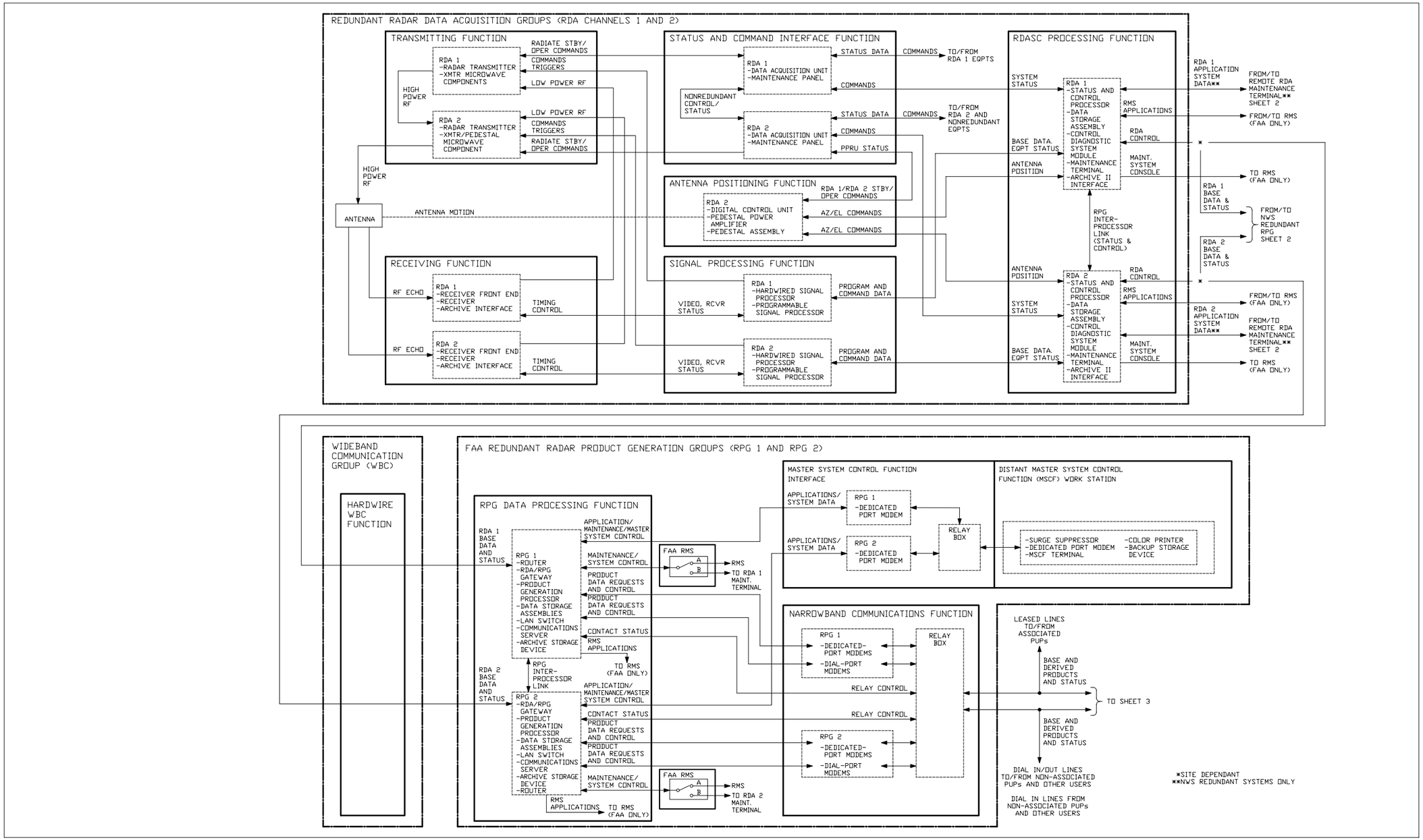

NX1575

Figure FO3–3. Redundant System, Operational Equipment Groups, Simplified Functional Block Diagram (Sheet 1 of 3)

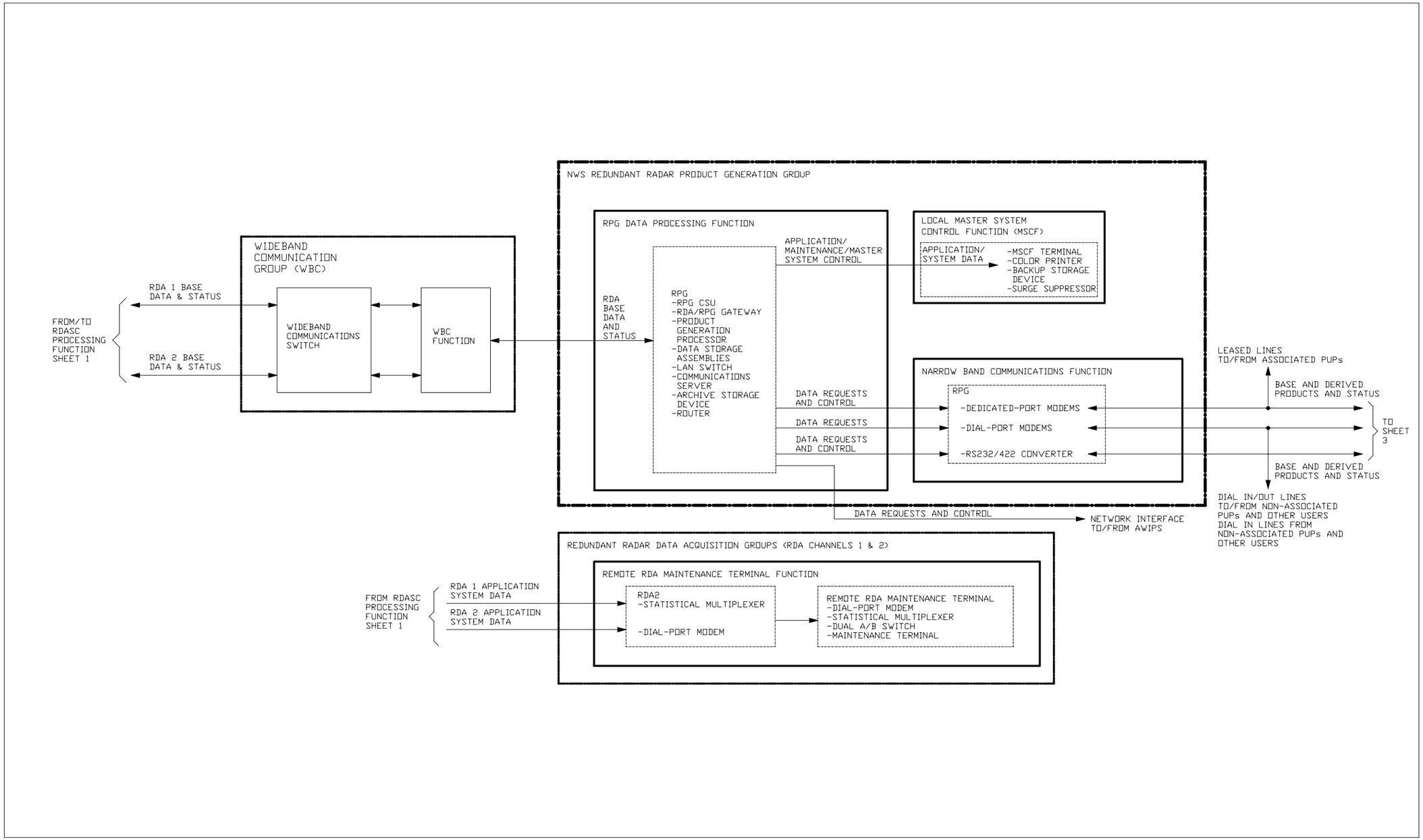

NX1576

Figure FO3–3. Redundant System, Operational Equipment Groups, Simplified Functional Block Diagram (Sheet 2 of 3)

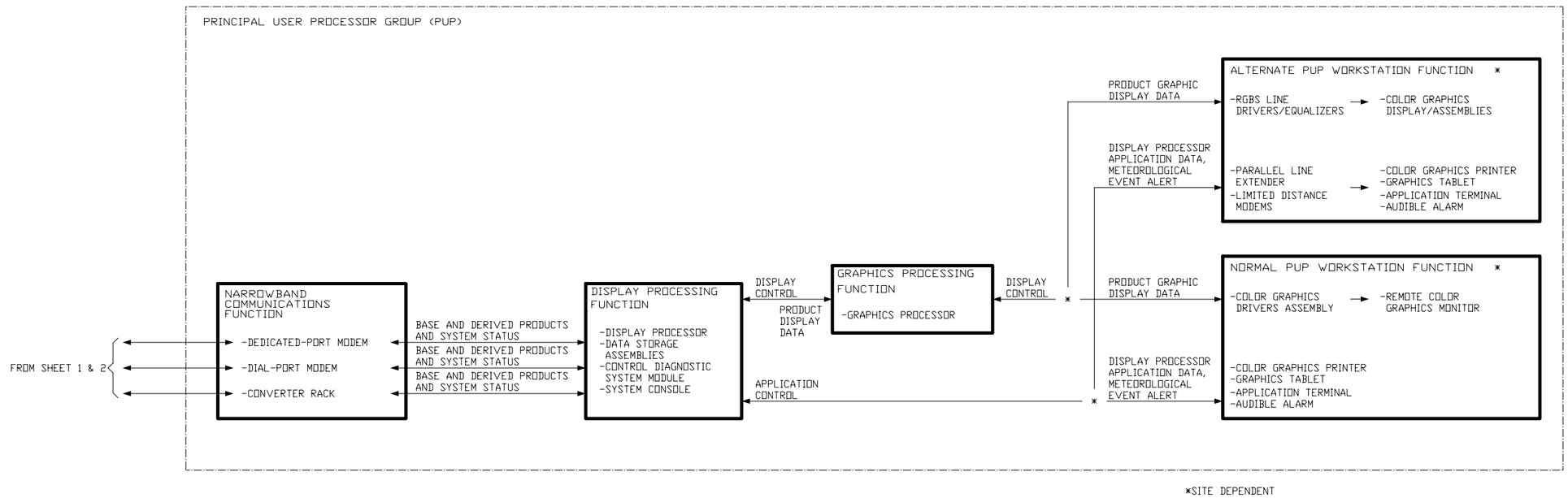

NX1537

Figure FO3–3. Redundant System, Operational Equipment Groups, Simplified Functional Block Diagram (Sheet 3 of 3)

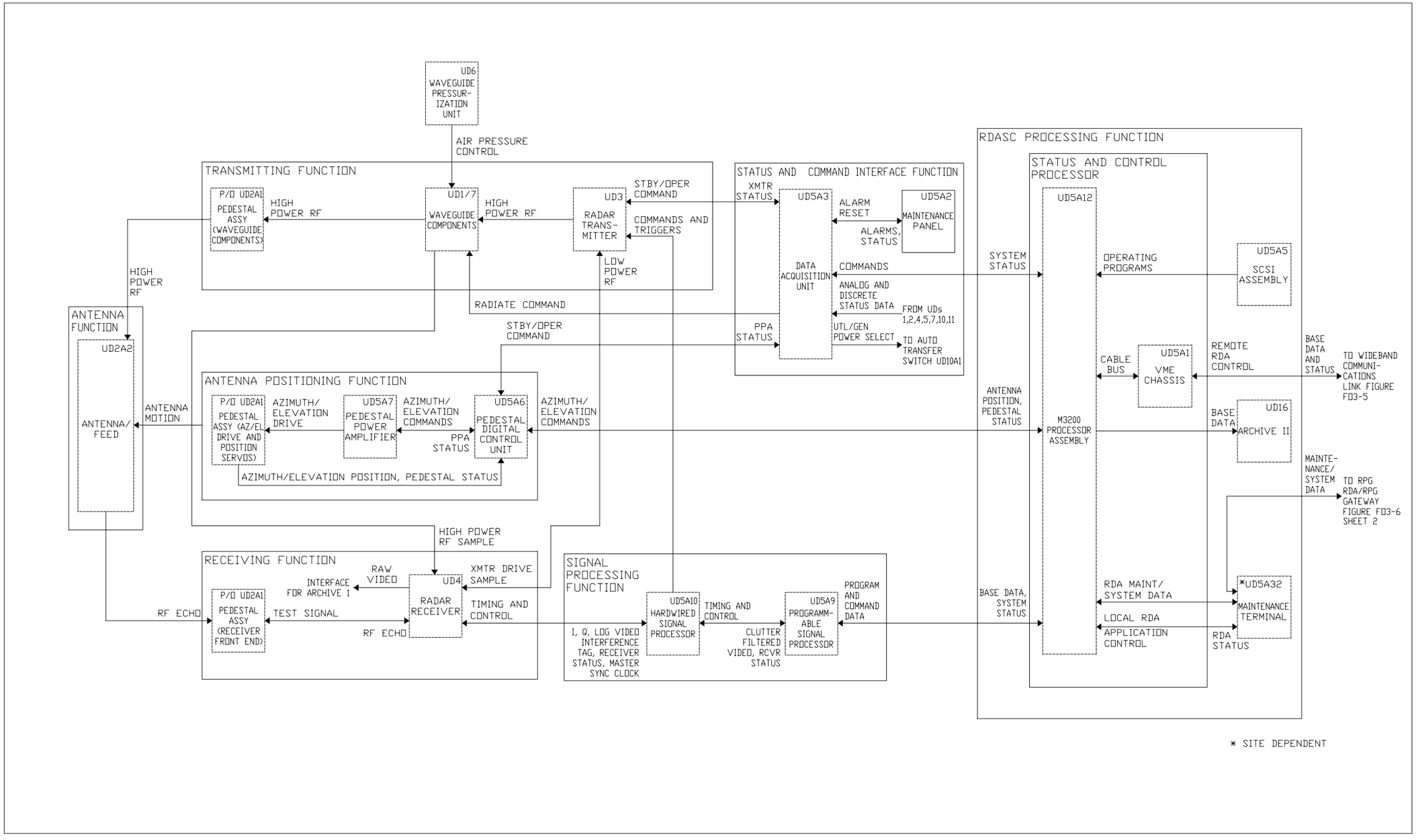

NX1577

Figure FO3–4. Nonredundant RDA, Functional Block Diagram

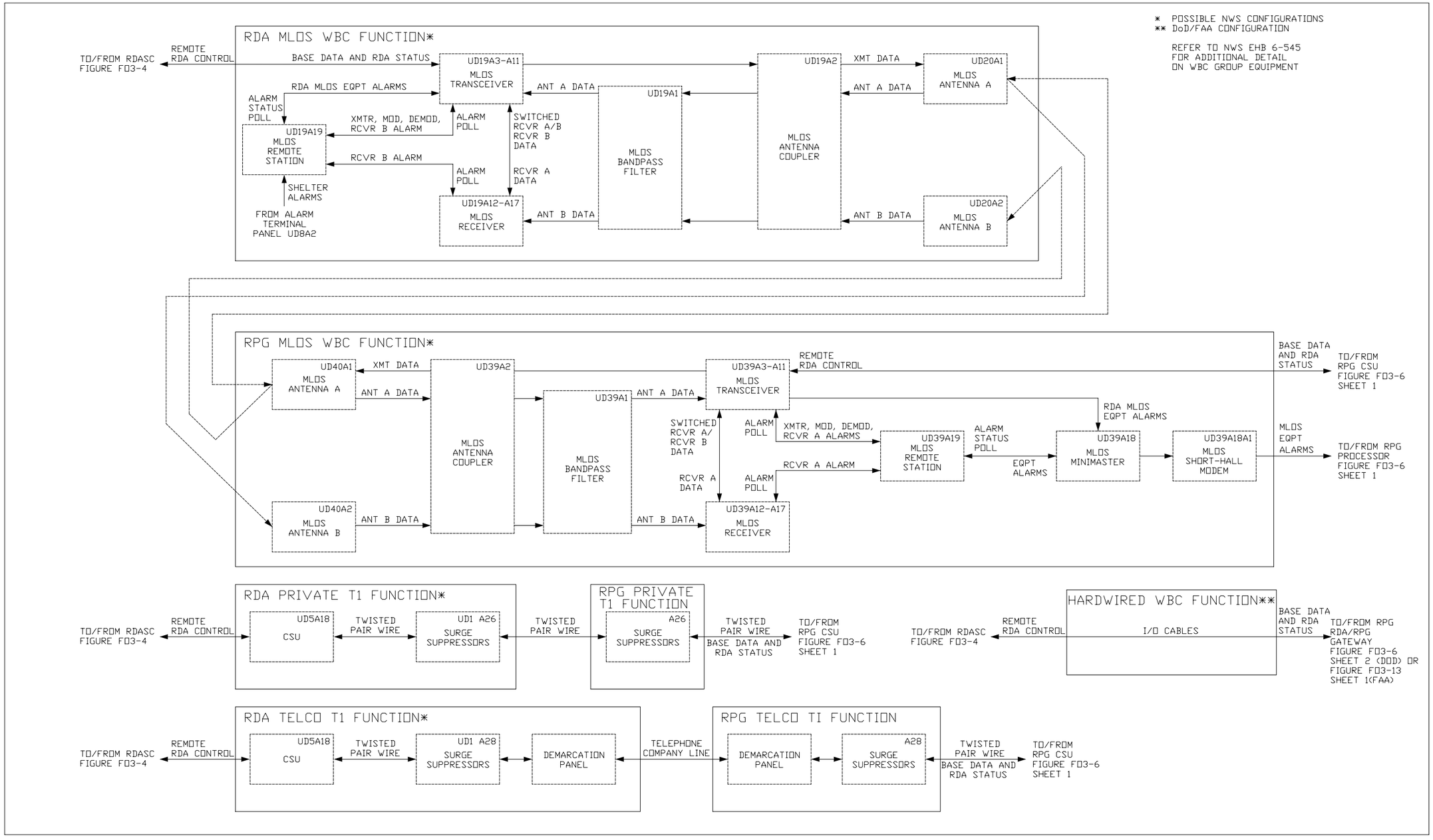

NX1578

Figure FO3–5. WBC, Functional Block Diagram

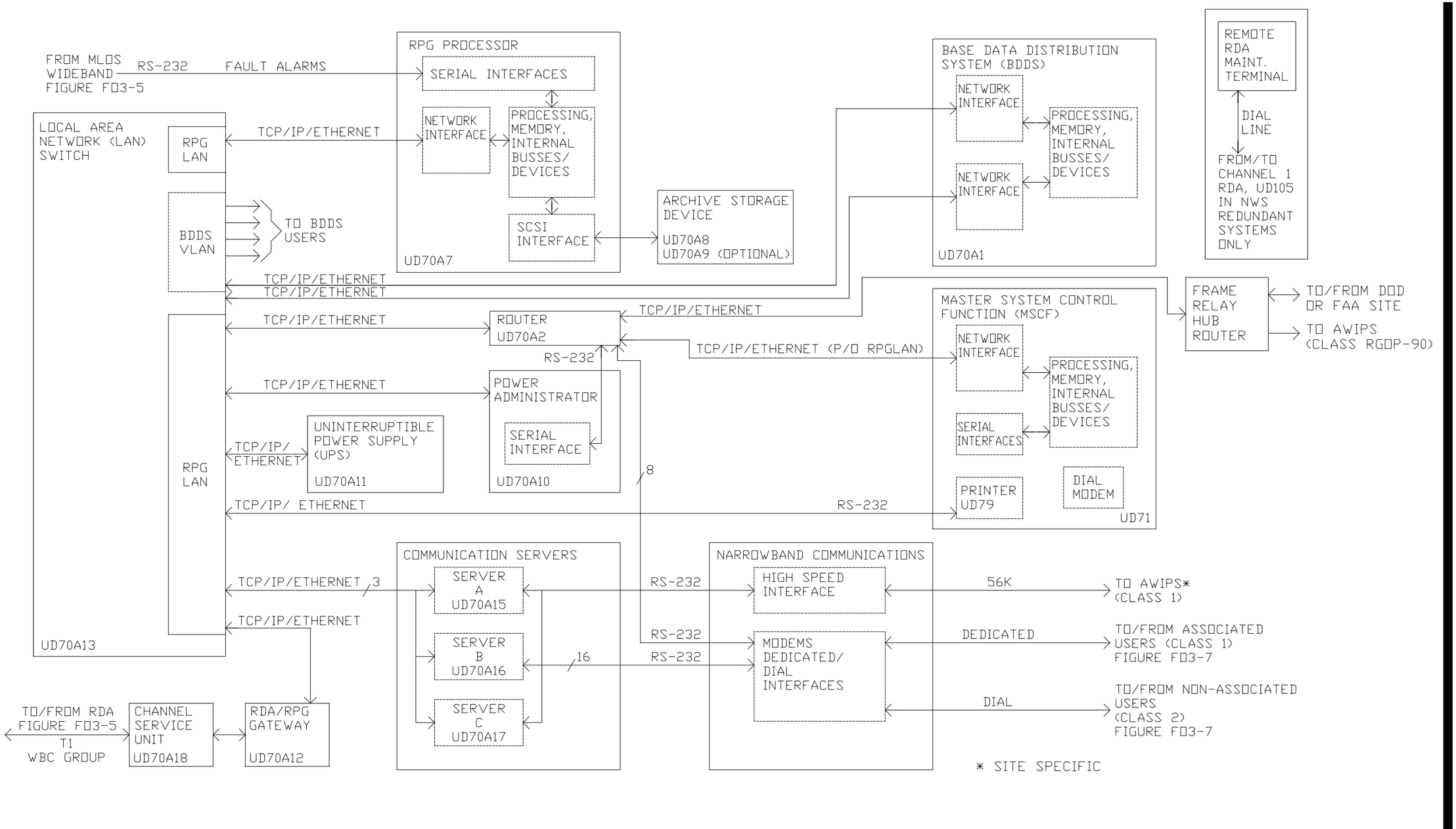

Figure FO3–6. RPG (NWS) Functional Block Diagram (Sheet 1 of 2)

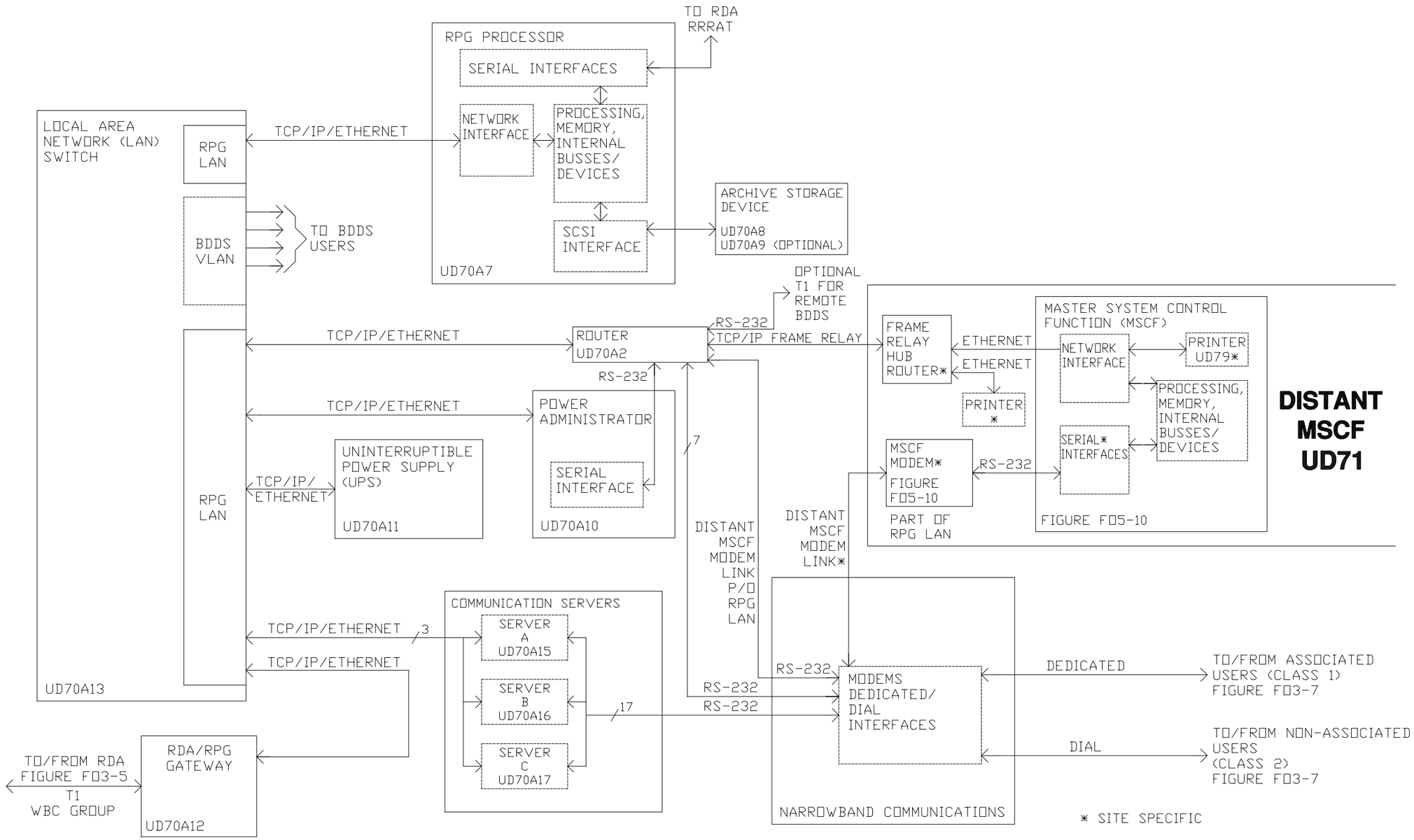

Figure FO3–6. RPG (DoD) Functional Block Diagram (Sheet 2 of 2)

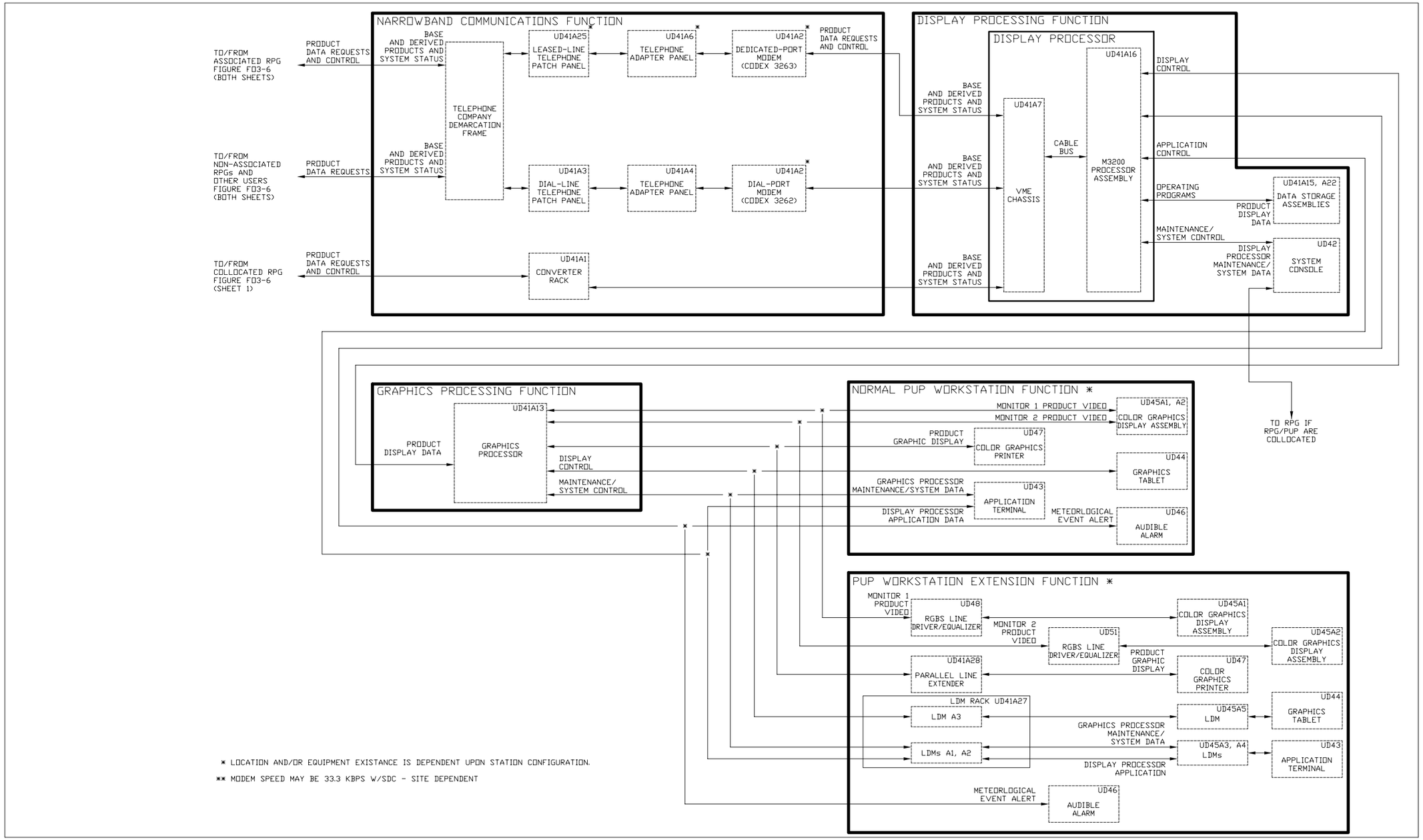

NX1581

Figure FO3–7. PUP, Functional Block Diagram

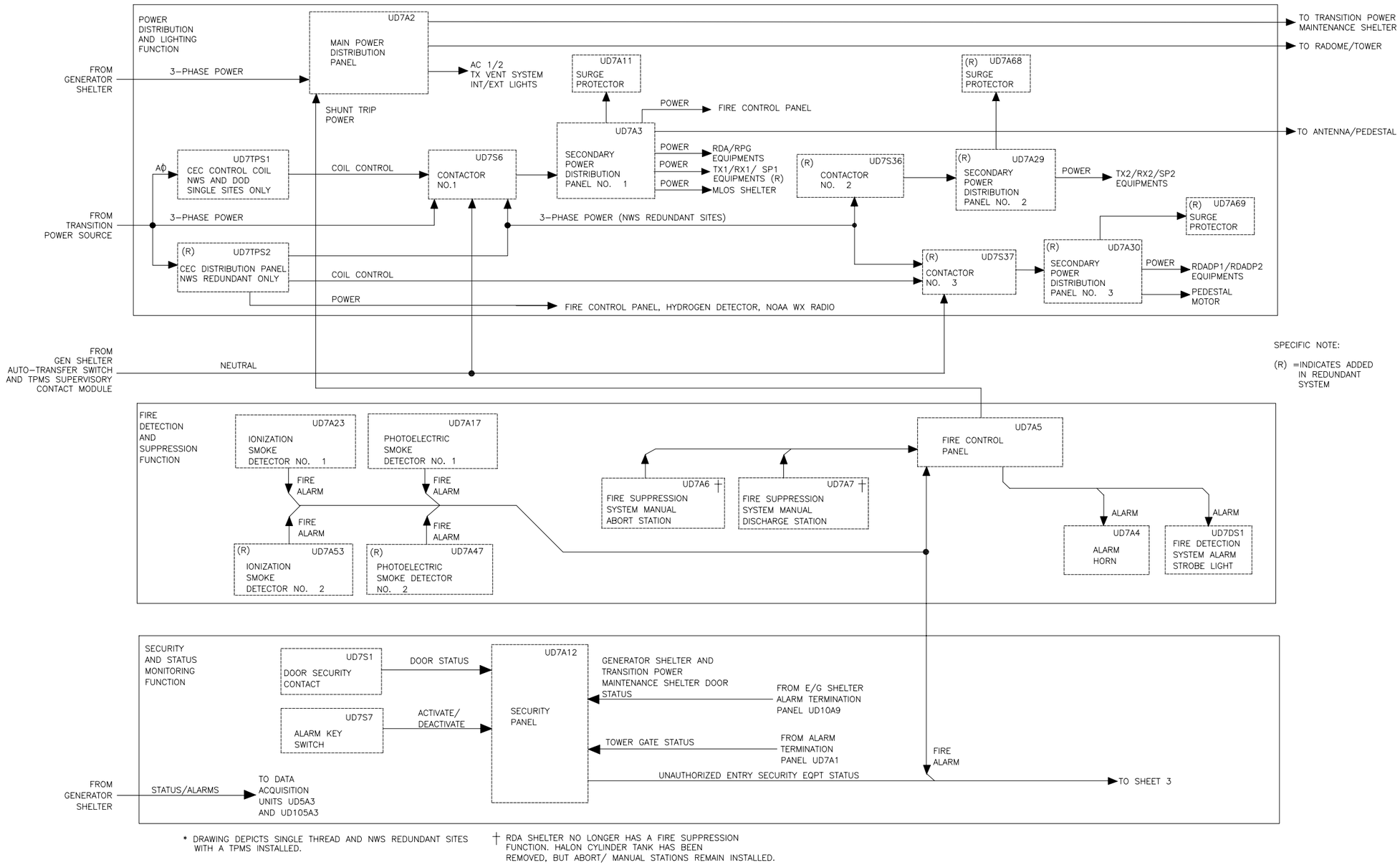

* DRAWING DEPICTS SINGLE THREAD AND NWS REDUNDANT SITES WITH A TPMS INSTALLED.

† RDA SHELTER NO LONGER HAS A FIRE SUPPRESSION FUNCTION. HALON CYLINDER TANK HAS BEEN REMOVED, BUT ABORT/ MANUAL STATIONS REMAIN INSTALLED.

NX1582

Figure FO3–8. RPIE, Radar Equipment Shelter, Functional Block Diagram (Sheet 1 of 3)

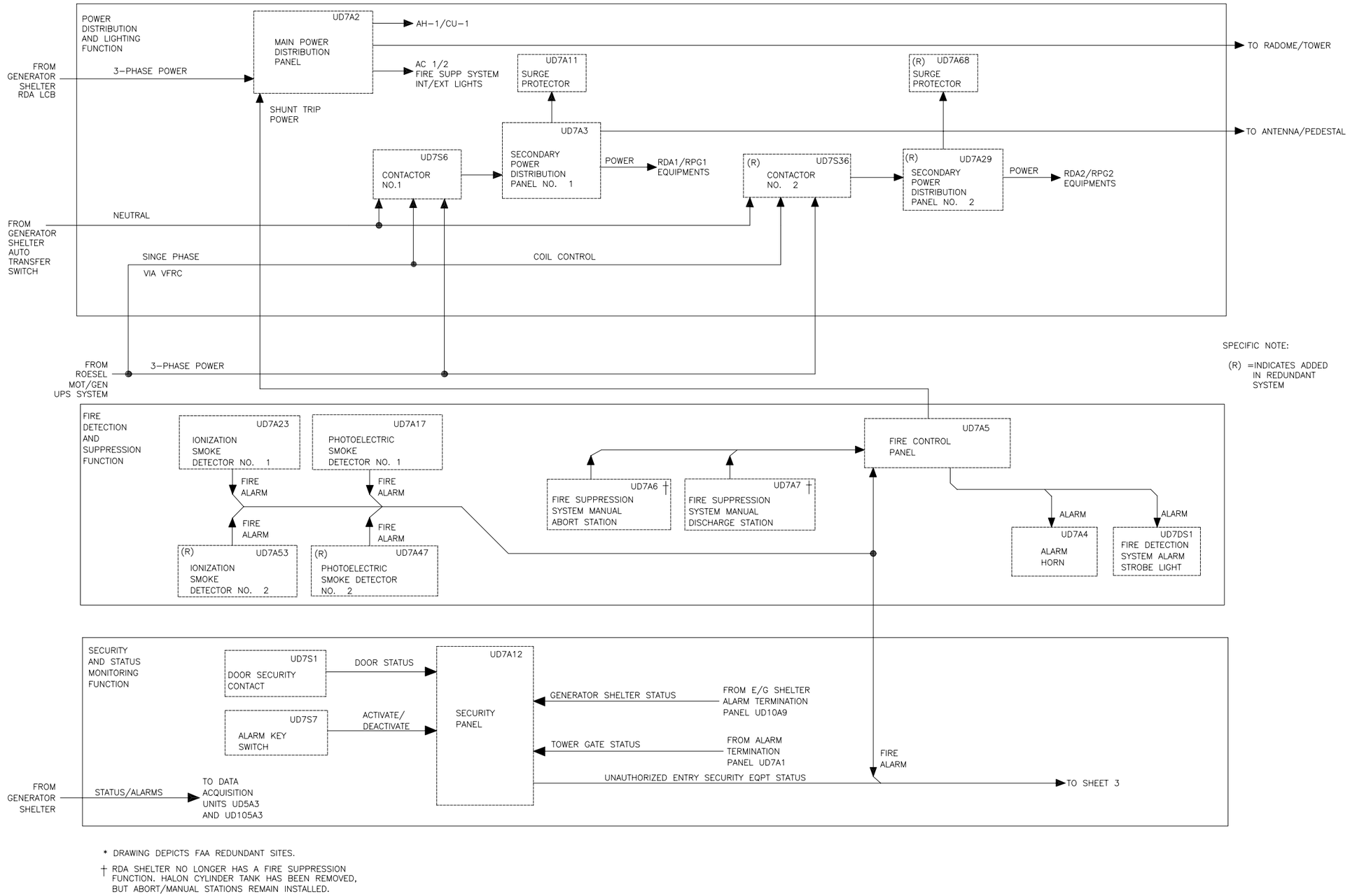

NX1583

* DRAWING DEPICTS FAA REDUNDANT SITES.

† RDA SHELTER NO LONGER HAS A FIRE SUPPRESSION FUNCTION. HALON CYLINDER TANK HAS BEEN REMOVED, BUT ABORT/MANUAL STATIONS REMAIN INSTALLED.

Figure FO3–8. RPIE, Radar Equipment Shelter, Functional Block Diagram (Sheet 2 of 3)

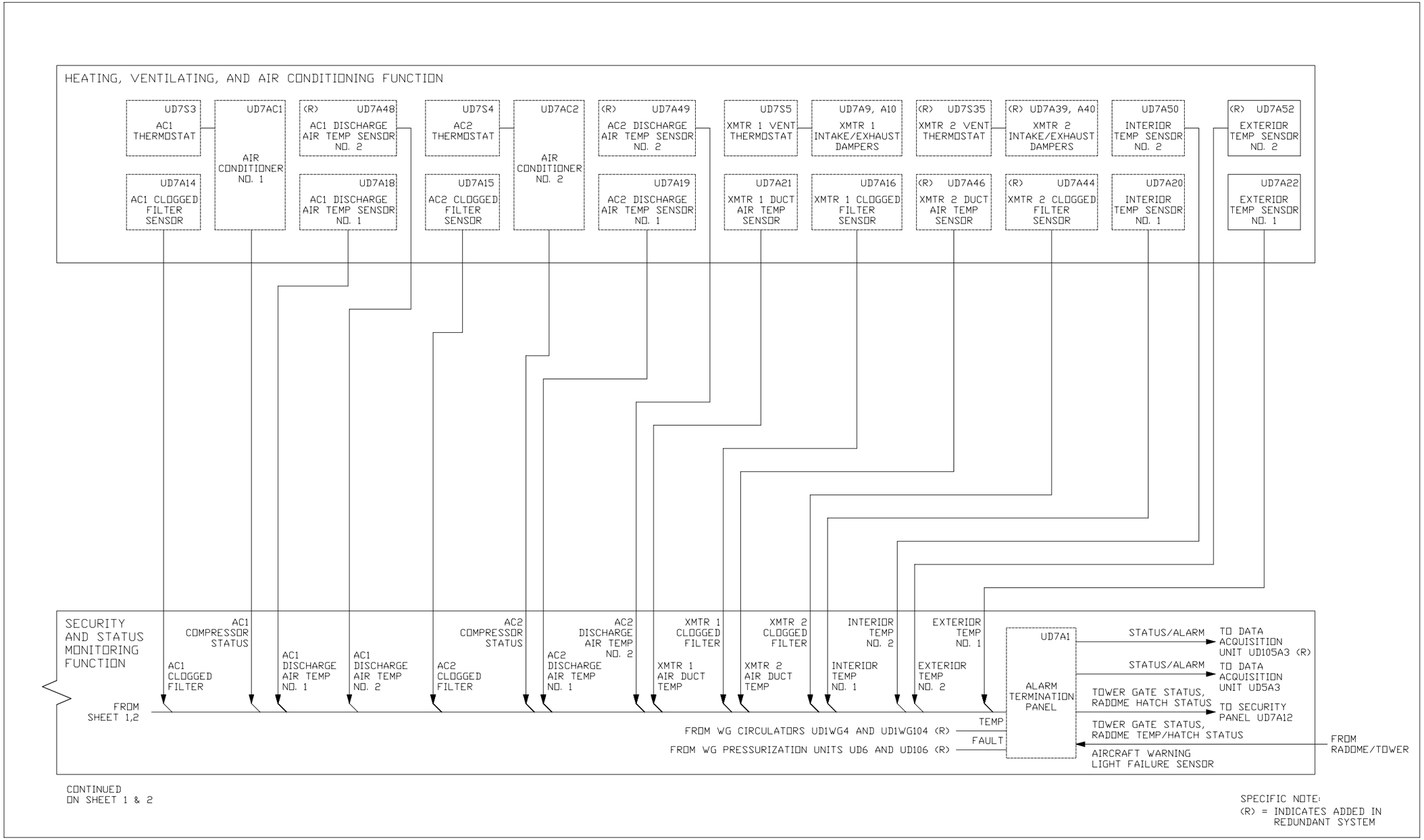

NX1584

Figure FO3–8. RPIE, Radar Equipment Shelter, Functional Block Diagram (Sheet 3 of 3)

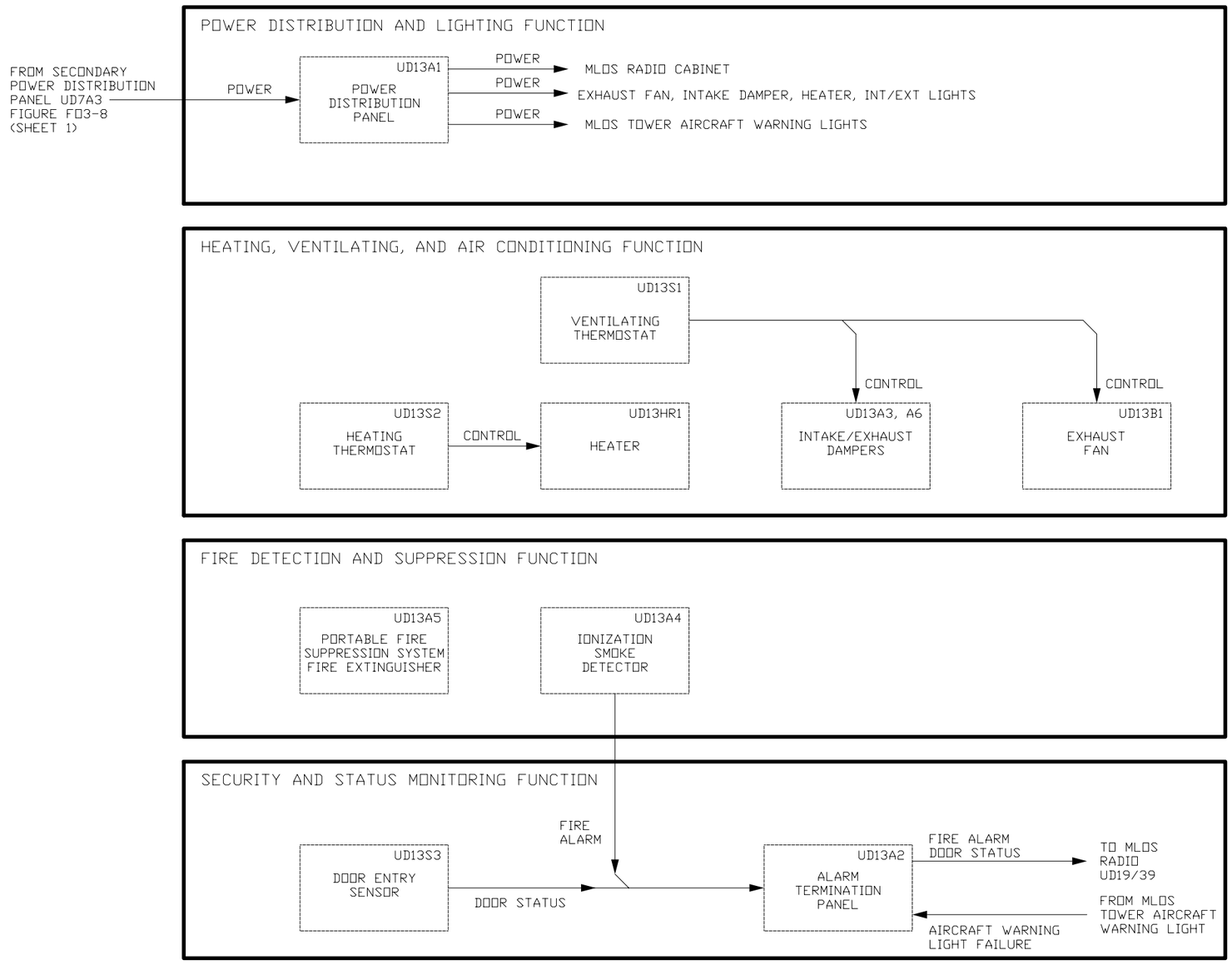

NX1585

Figure FO3–9. RPIE, RDA/RPG MLOS Shelter, Functional Block Diagram

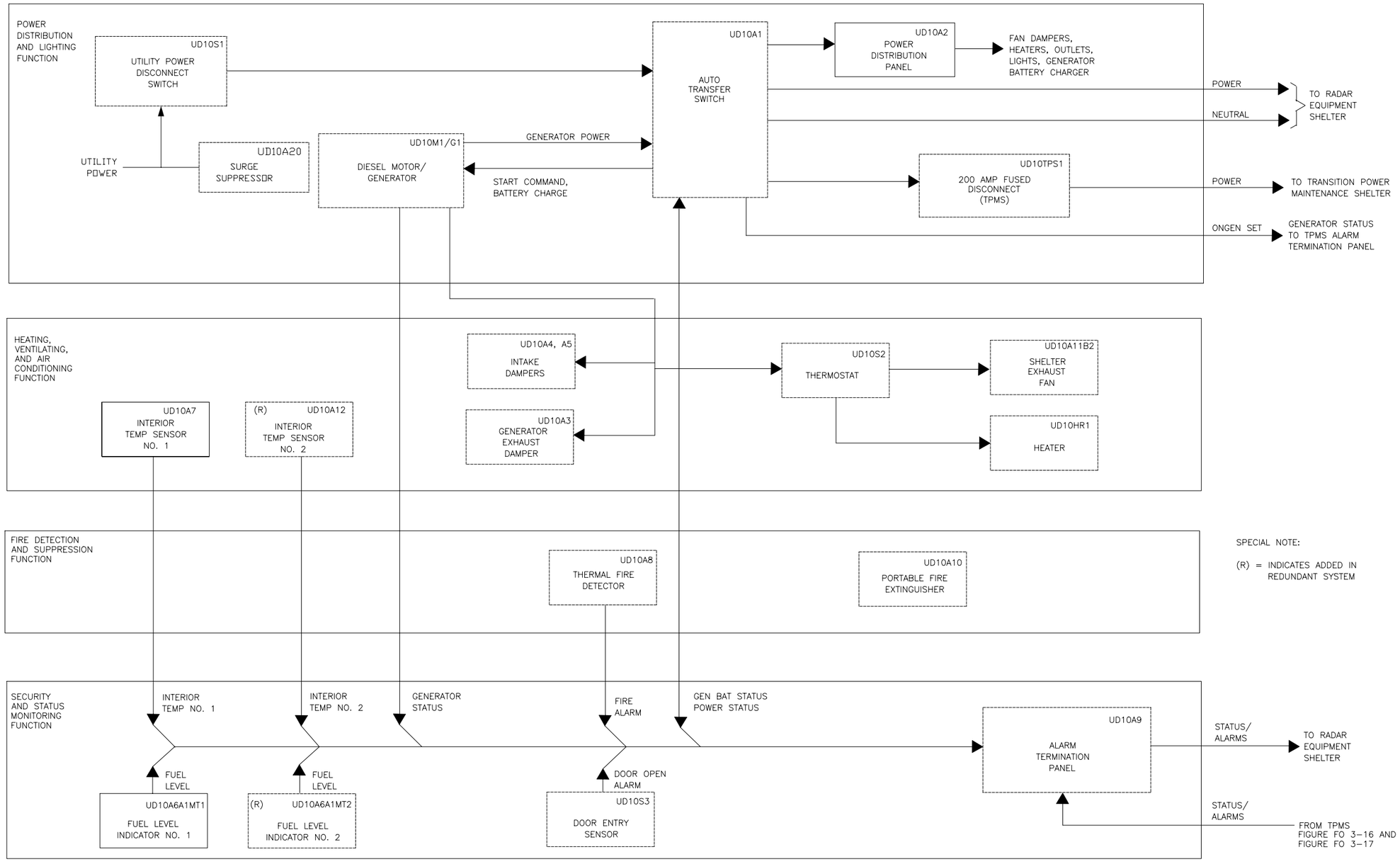

NX1586

Figure FO3–10. RPIE, Generator Shelter, Functional Block Diagram

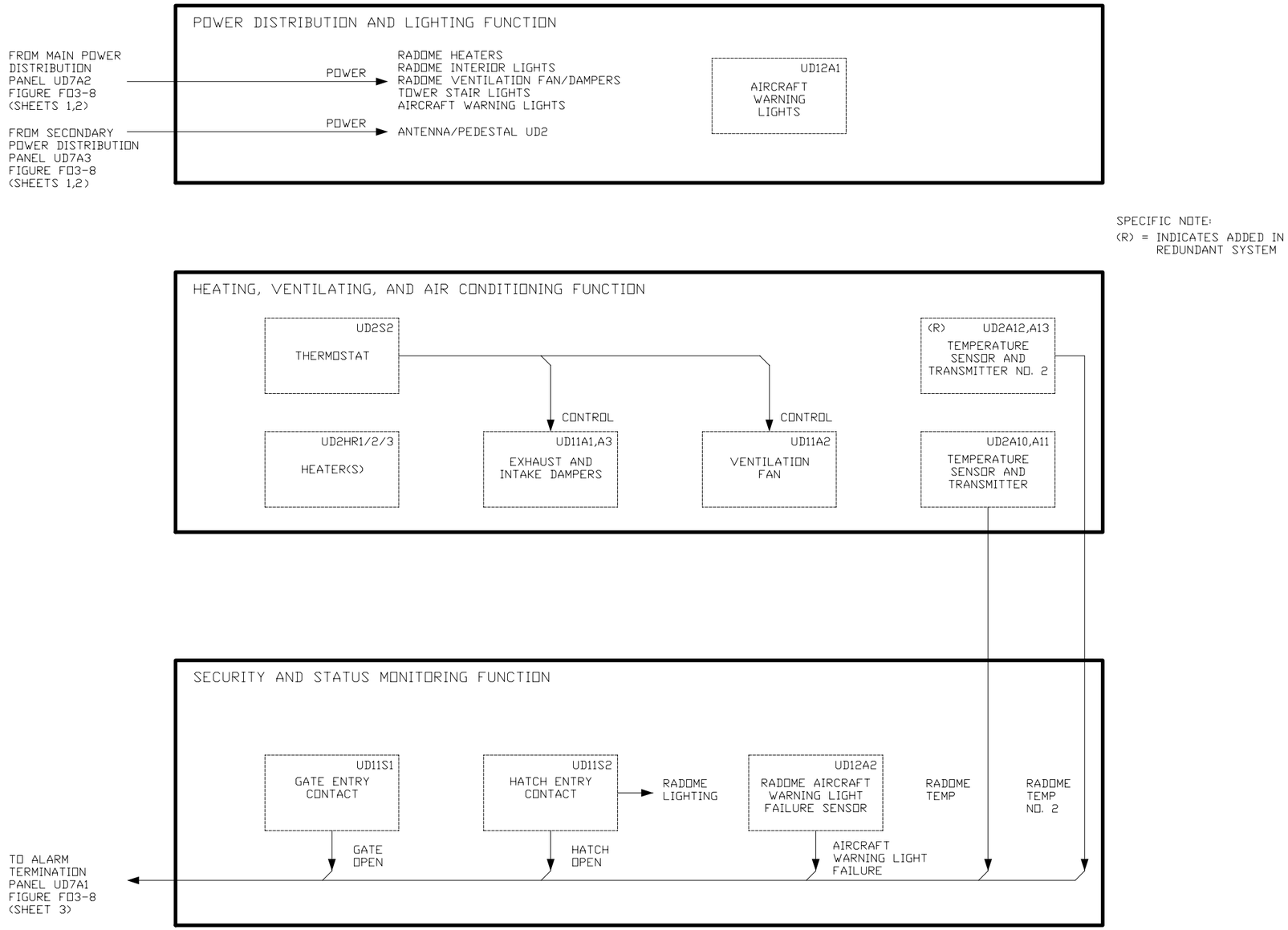

NX1587

Figure FO3–11. RPIE, Radar Tower and Radome, Functional Block Diagram

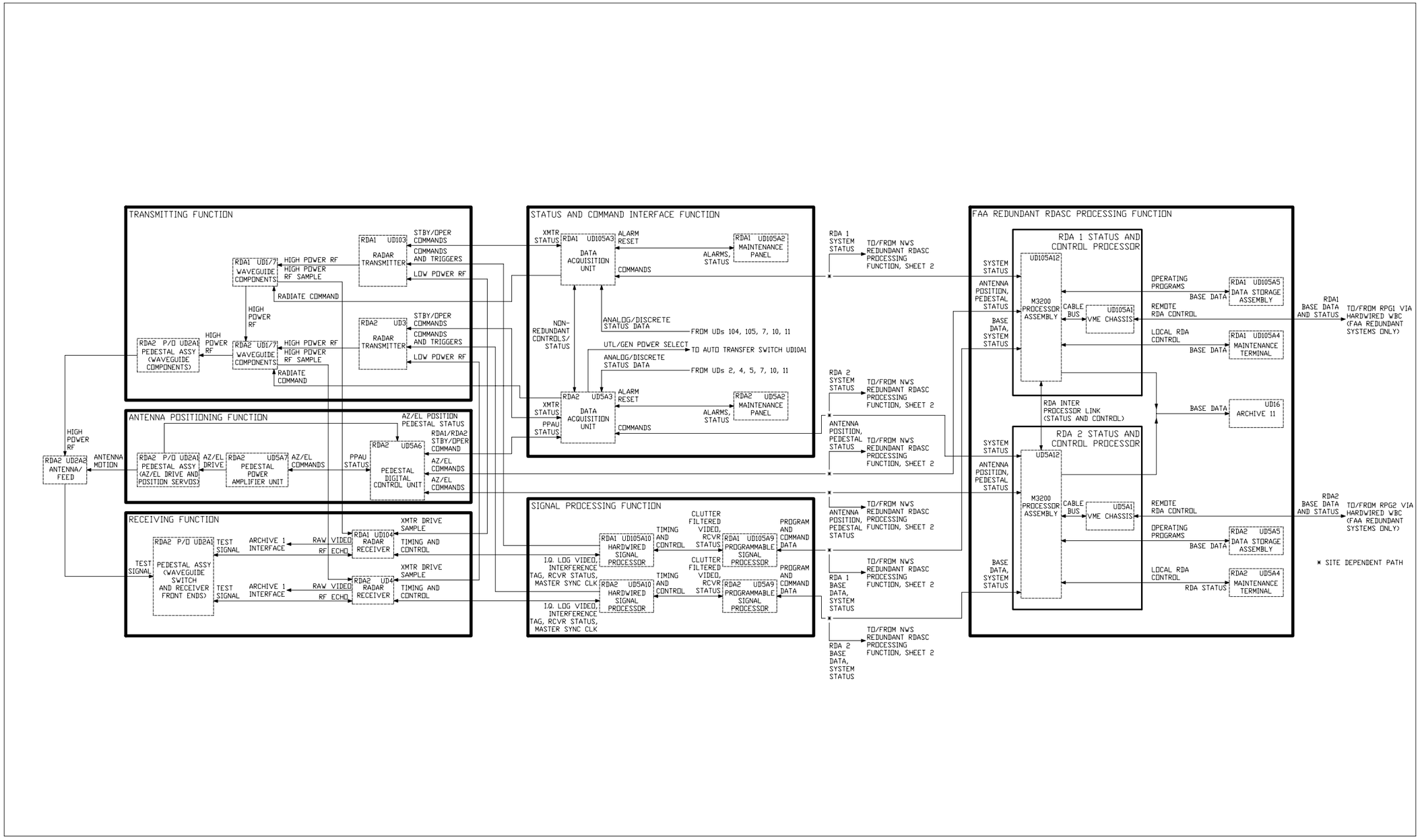

NX1588

Figure FO3–12. Redundant RDA, Functional Block Diagram (Sheet 1 of 2)

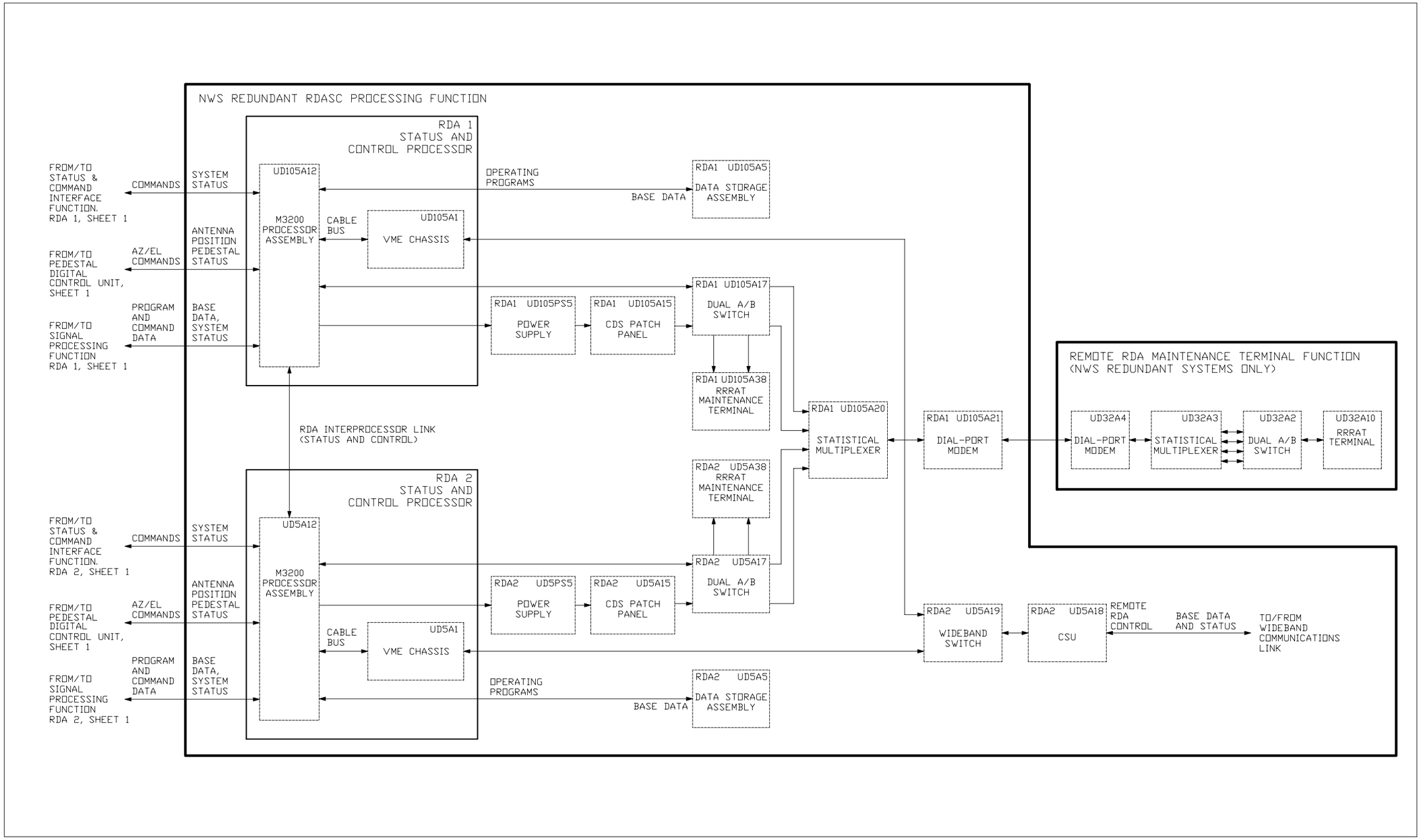

NX1589

Figure FO3–12. Redundant RDA, Functional Block Diagram (Sheet 2 of 2)

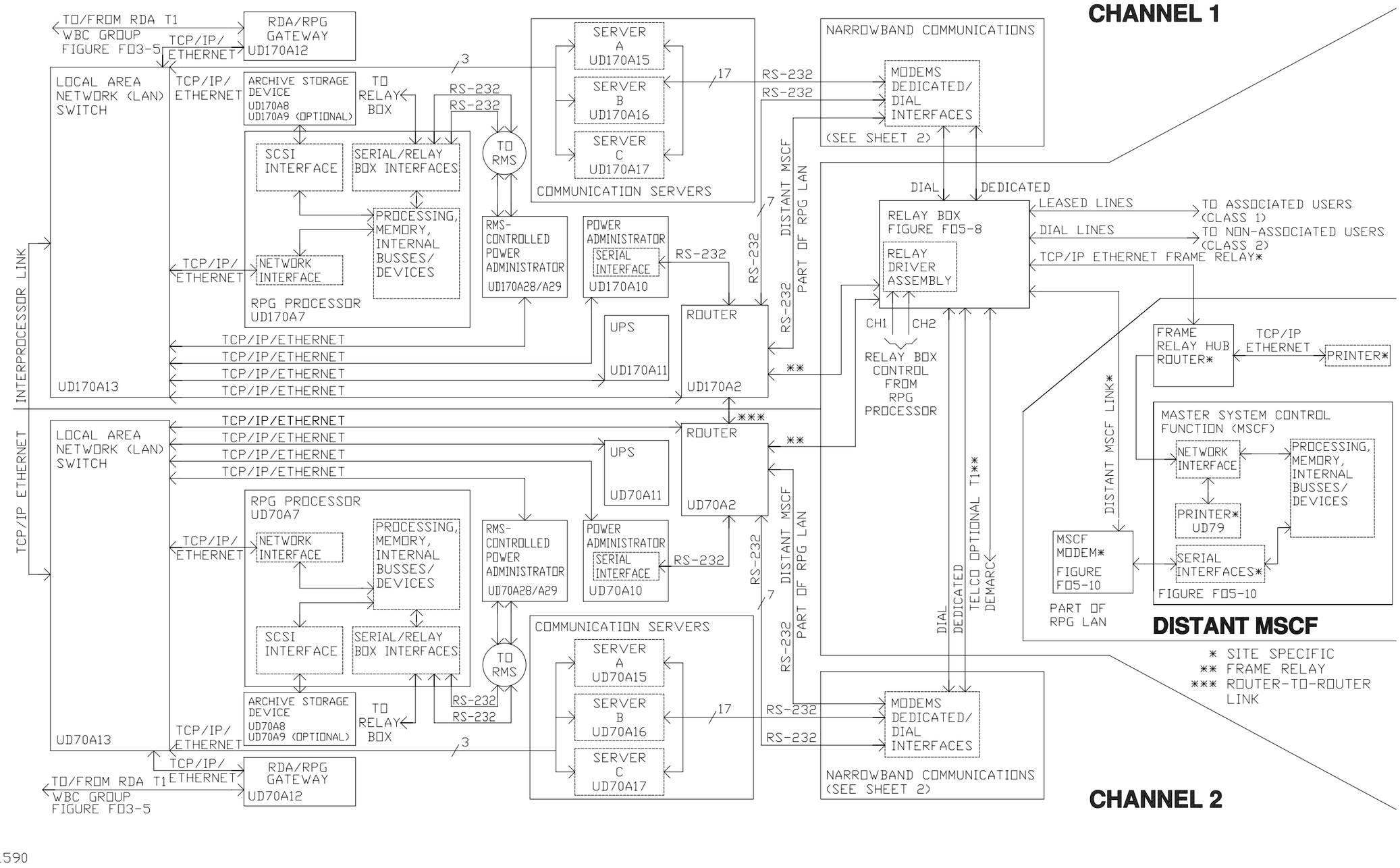

Figure FO3-13. RPG (FAA Redundant), Functional Block Diagram (Sheet 1 of 2)

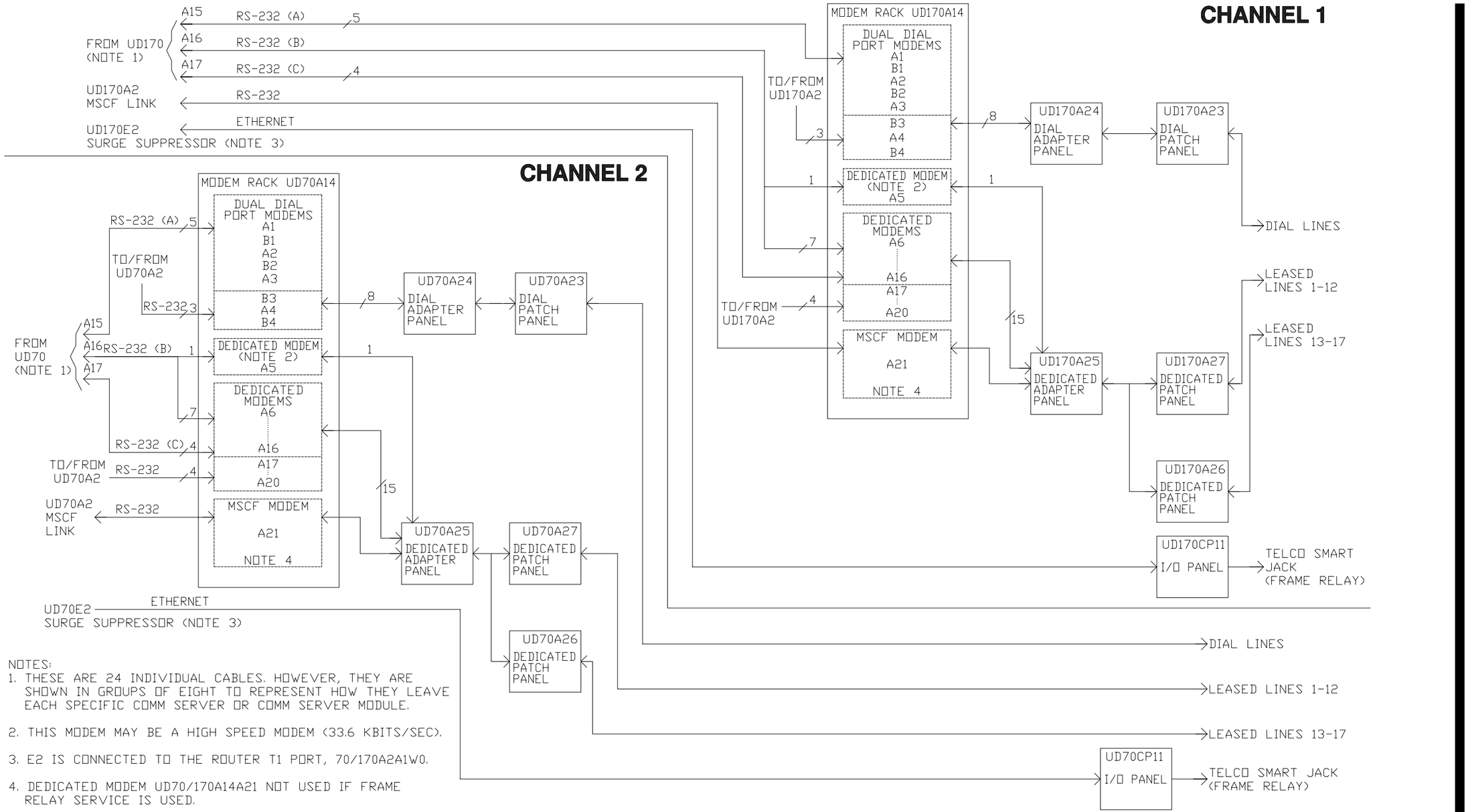

Figure FO3-13. RPG (FAA Redundant) Functional Block Diagram (Sheet 2 of 2)

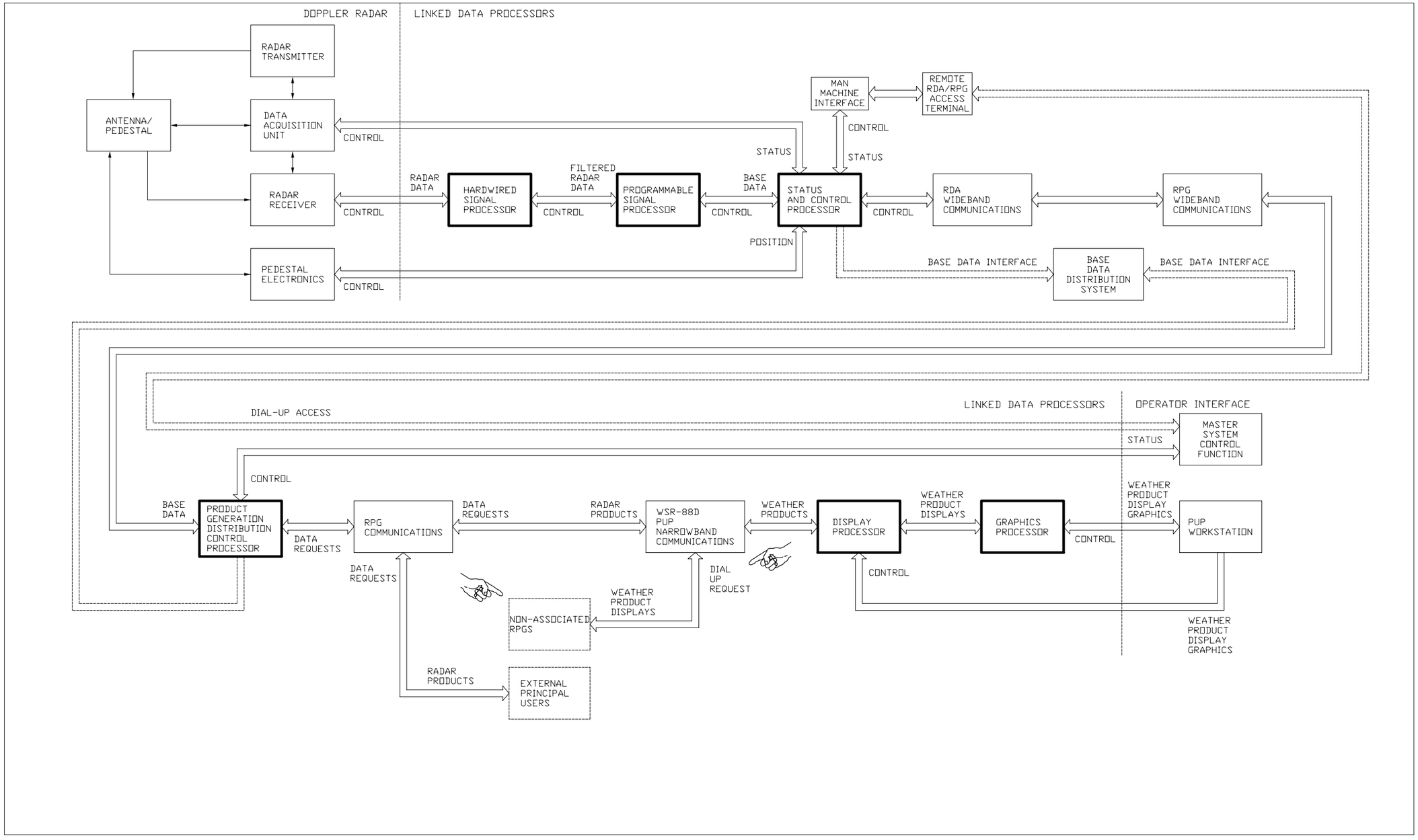

NX1592

Figure FO3–14. System Processor Interrelationships, Simplified Block Diagram

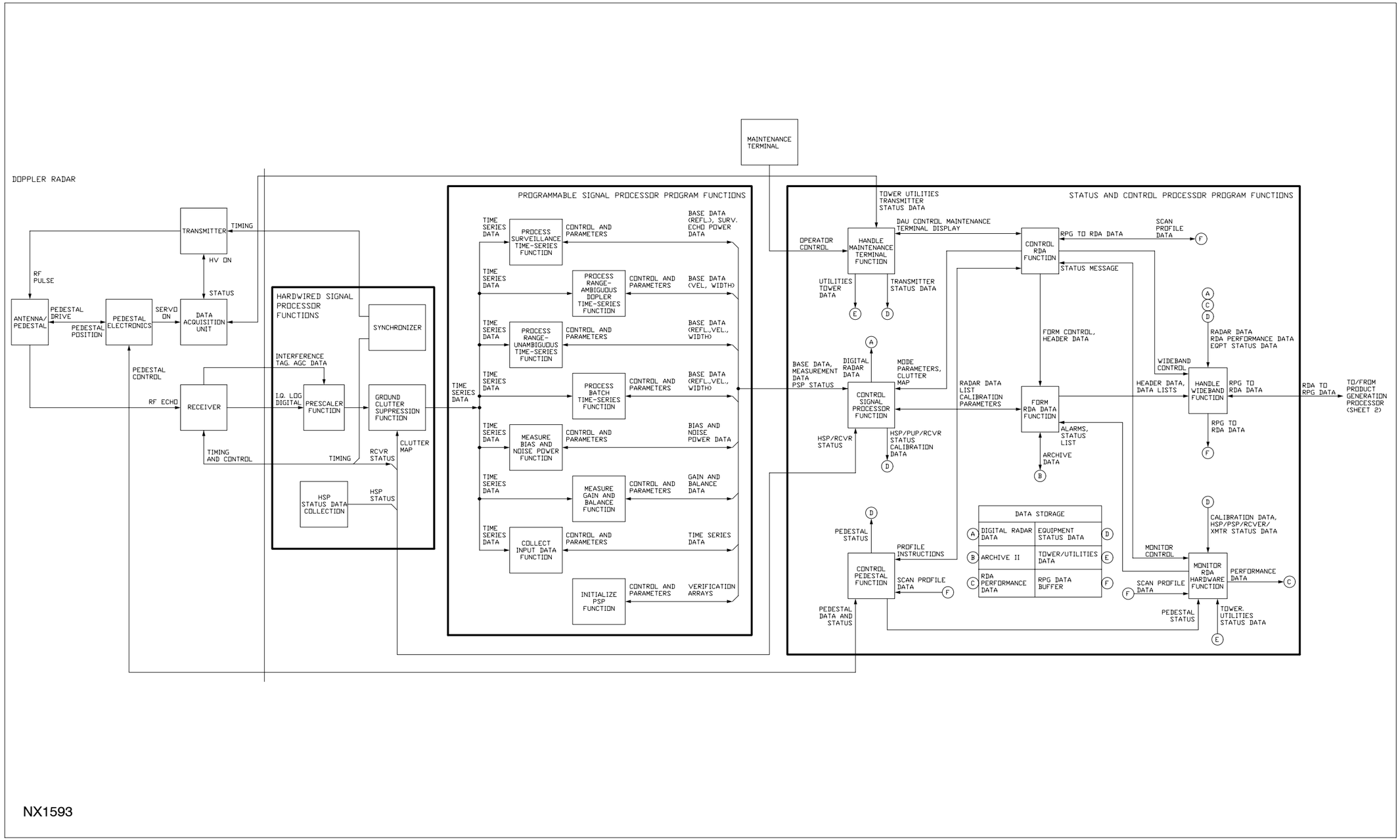

Figure FO3–15. System Processor Program Data Flow, Simplified Block Diagram (Sheet 1 of 2)

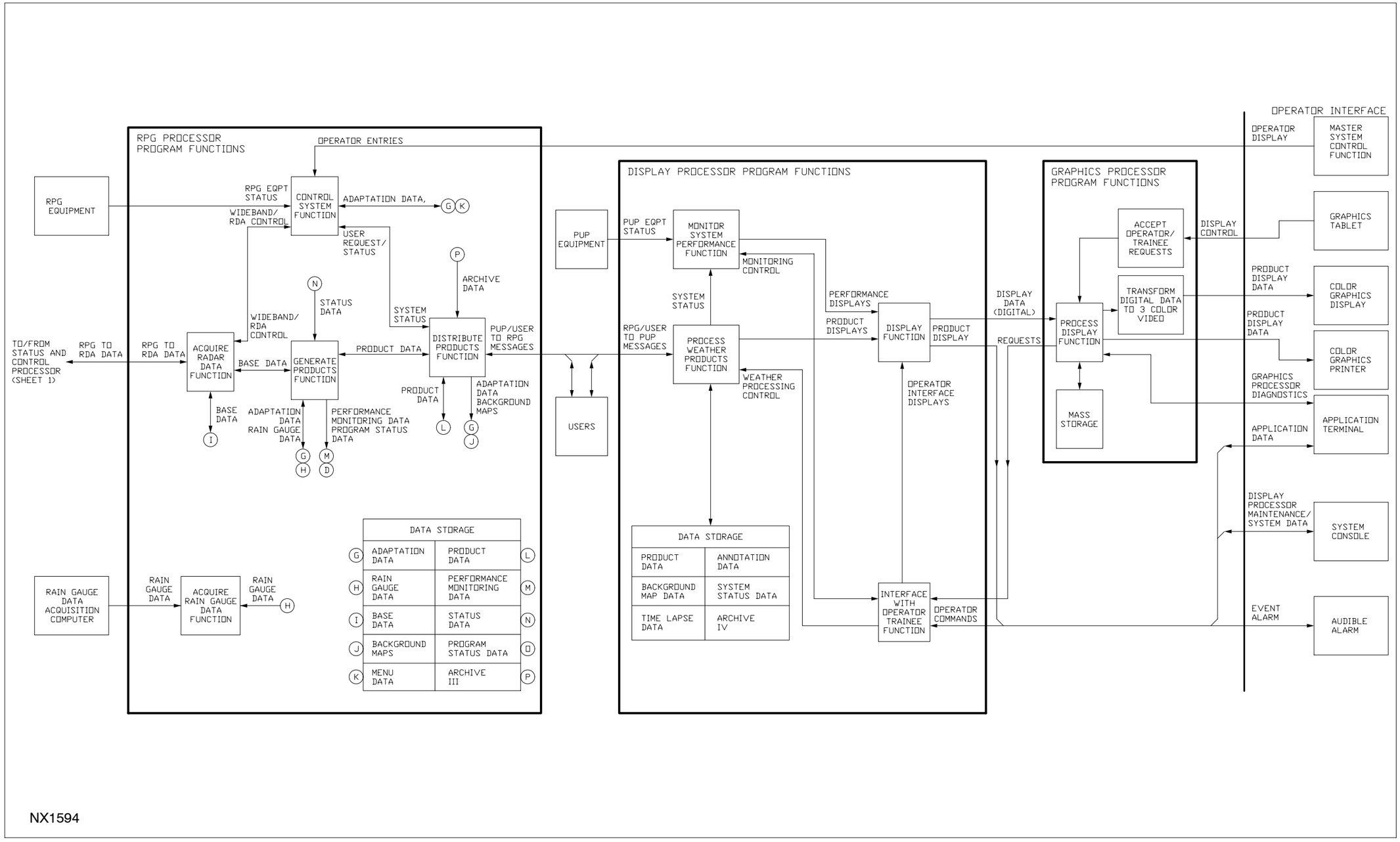

Figure FO3–15. System Processor Program Data Flow, Simplified Block Diagram (Sheet 2 of 2)

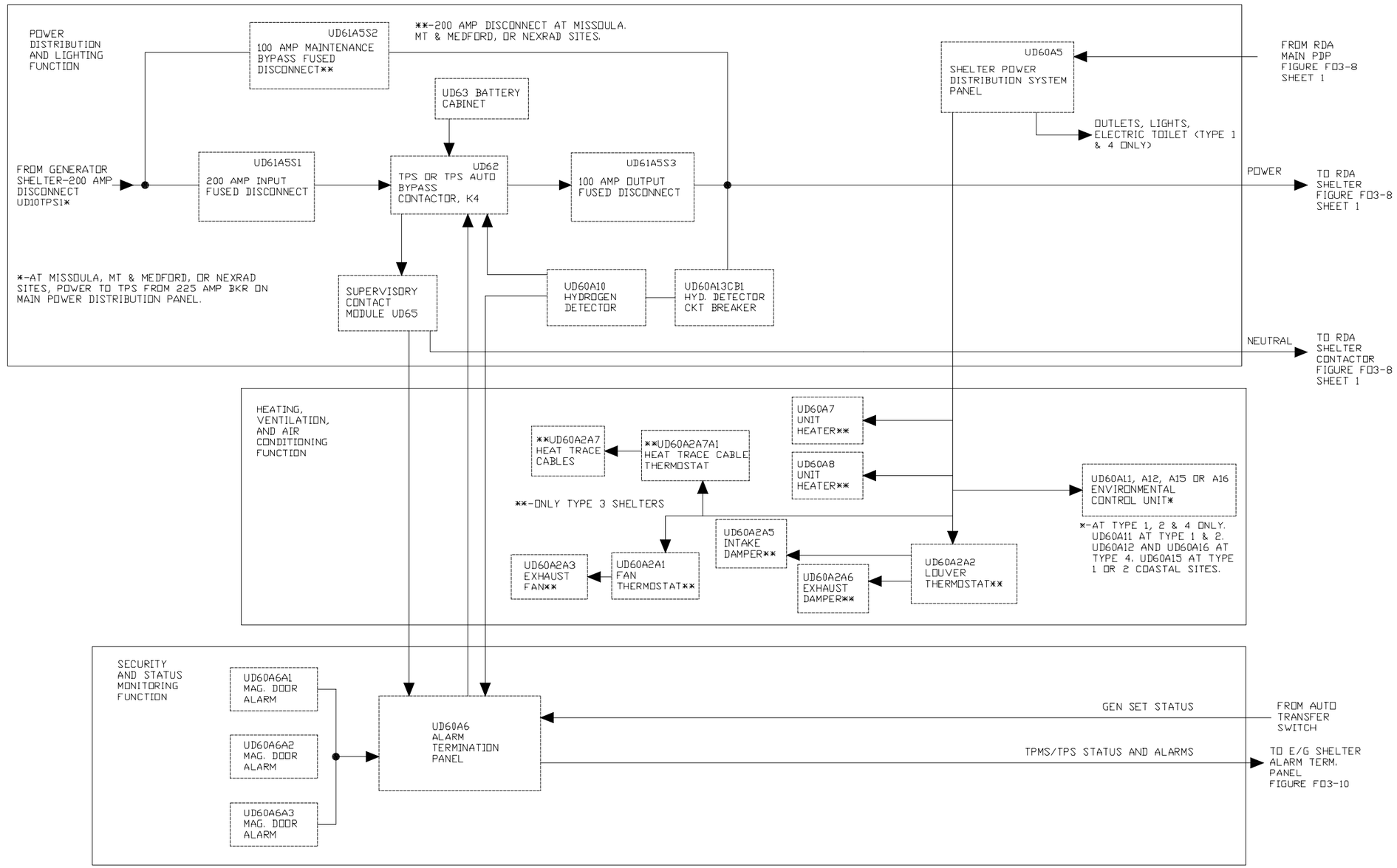

NX2286

Figure FO3–16. Transition Power Maintenance, Shelter Types 1, 2, 3, and 4 Functional Flow Diagram

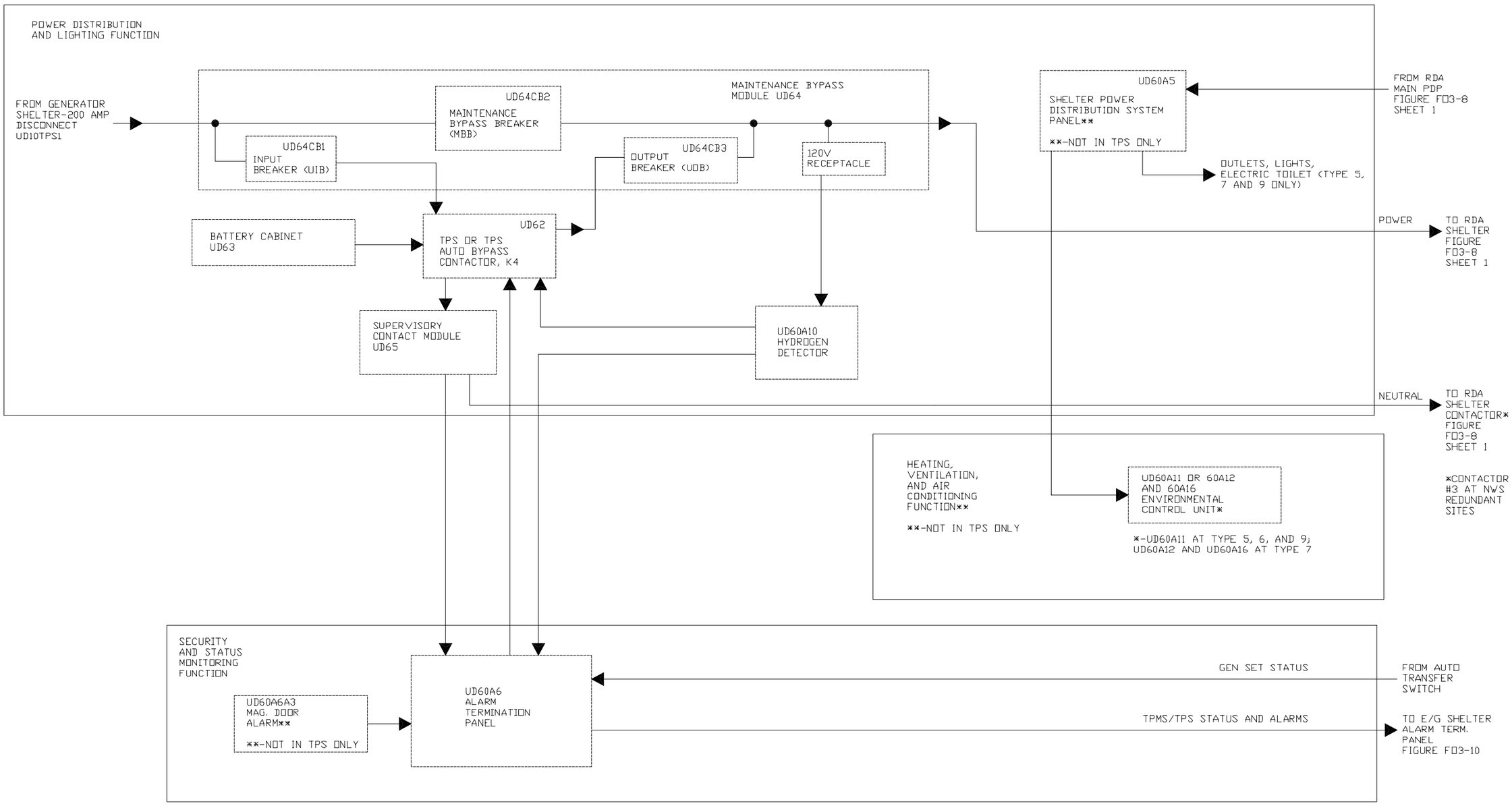

NX2287

Figure FO3-17. Transition Power Maintenance, Shelter Types 5, 6, 7, and 9 Functional Flow Diagram

APPENDIX A

OPERATIONAL INFORMATION

Section A–1. General Information

NOTE

INFORMATION FROM THIS APPENDIX HAS BEEN MOVED TO EHB 6–526, APPENDIX A, "ENTITLED OPERATING FUNCTION OVERVIEW."

This appendix provides a system–level orientation to WSR–88D operating function and procedures. The appendix consists of two sections:

- Section A–2, Operating Function Overview. This section discusses operating modes, radar data processing, and meteorological product display.
- Section A–3, Operating Procedure Overview. This section discusses the various levels of operation, system startup, and basic operating tasks.

APPENDIX B

MAINTENANCE APPROACH

Section B–1. General Information

NOTE

This appendix refers to the RPGPCA as UD70 (previously referred to as the Processor Cabinet {UD21} and Communications Cabinet {UD22}). Unless otherwise specified for FAA redundant systems, this information also applies to RPGPCA UD170.

This appendix provides a system–level orientation to WSR–88D maintenance functions and procedures. The appendix consists of four sections:

- Section B–2, Maintenance Approach. This section discusses the maintenance approach philosophy, including on–equipment and depot maintenance, and on–site and depot spares.
- Section B–3, Periodic Maintenance. This section discusses the preventive maintenance philosophy and provides an index of all WSR–88D periodic maintenance procedures.
- Section B–4, Fault Isolation. This section discusses the fault isolation philosophy, including fault detection and fault isolation methodology.
- Section B–5, Component Replacement And Setup Procedures. This section discusses the corrective maintenance philosophy, including LRU replacement, alignment requirements, and verification of return to normal operation.

Section B–2. Maintenance Approach

B–2.1 INTRODUCTION.

The WSR–88D maintenance approach entails centrally monitoring systems performance at the RDA, RPG, and PUP level to localize the failures through the use of software and hardware maintenance features and to replace a failed LRU from direct and on–site spares. Diagnostic software and maintenance features are designed to rapidly detect and isolate malfunctions so that LRU fault isolation, removal, and replacement can all take place within one half hour of failure detection with subsystem maximum downtime of less than one hour (2 hours for RDA). An LRU is defined as a self–contained unit/module/assembly to which a fault can be isolated and does not require disassembly of the next higher assembly (NHA) other than disconnecting cables.

B–2.2 ON–EQUIPMENT MAINTENANCE.

On–equipment maintenance at the WSR–88D operational sites is normally accomplished by maintenance personnel assigned to the location. Organizational maintenance action consists primarily of removal and replacement of LRUs. However, where simple tests or repairs can be made to LRUs, such as repair or replacement of blowers, circuit breakers, fuses, cables, lamps, switches, etc., organizational maintenance personnel will perform these repairs using standard shop troubleshooting and repair procedures. Equipment maintenance beyond the LRU will be accomplished by personnel from a higher level maintenance facility.

B–2.3 DEPOT (OFF–EQUIPMENT) MAINTENANCE.

Off–equipment maintenance of WSR–88D LRUs, SRUs, electronic components, and software is accomplished by the central repair depot. Depot level includes both repair of authorized components and on–site assistance at the operational sites upon request.

B–2.4 ON–SITE SPARES.

Operational sites will store all the LRUs required to support on–equipment maintenance removal/replacement functions. Sites may also store selected back–up assets to support depot maintenance assistance.

B–2.5 REPAIR DEPOT.

The repair depot stores the necessary back–up LRUs, SRUs, and repair parts to effect repairs on failed LRUs.

Section B–3. Periodic Maintenance

B–3.1 PERIODIC MAINTENANCE.

Periodic maintenance (PM) for the WSR–88D consists of scheduled inspections, replacements, and servicing procedures designed to ensure continuous operational availability of the WSR–88D unit. The inspection and servicing procedures are performed to accomplish one or more of the following objectives:

- Detection of deterioration caused by exposure to the elements (corrosion, sand, dust, moisture, fungus, salt, etc.)
- Detection of excessive wear of mechanical parts
- Cleaning or replacement of filters and general housekeeping tasks
- Cleaning, replacement, or topping–off of essential fluids and greases
- Performing operational checks under test and inspection conditions

These procedures are contained in the WSR–88D RDA, RPG, PUP, WBC, and RPIE maintenance manuals. The equipment maintenance manuals also provide specific reference to selected commercial manuals for additional PM procedures. NWS EHB 6–503 is a complex index of all required PM procedures, and provides planning data for each procedure, including specific manual references, periodicity, performance time, and associated system downtime. NWS EHB 6–503–1 and 6–503–2 have the actual PM procedures.

Section B–4. Fault Isolation

B–4.1 INTRODUCTION.

The normal fault isolation procedure is initiated either by annunciation of a fault condition detected by one of the application programs, or as a result of the performance of a system operability test. There is a class of WSR–88D equipment, such as the archive equipment, which is not necessary in continuous use. The only way to tell if the archive equipment has a malfunction is to exercise the equipment by trying to perform the archive function. Performance of the complete system operability test ensures that all system equipment is tested. The fault isolation flow charts are constructed in such a fashion that each area flow chart has a complete operability test. The fault isolation (troubleshooting) process consists of three distinct stages of procedures. These three stages provide a logical sequence for isolation of a fault which is detected during system operation. The troubleshooting stages are:

B–4.1.1 On–Line Performance Monitoring. This is an automatic process for fault detection using the hardware BITE and associated on–line software routines. The RDA status and control application program, CPCI01, monitors performance of the RDA group equipment. It sends status and alarm messages to the RPG group as well as making this information available at the RDA group maintenance terminal. The RPG application program monitors the performance of the RPG group equipment. The RPG application program makes available the status and alarm messages, to both the RPG MSCF, and to the PUP group data processor. The PUP applications program monitors the performance of the PUP group equipment and makes its own status and alarms, as well as the status and alarms it receives from the RPG group, available to the PUP workstation applications terminal. The left–side color monitor at the PUP workstation provides a graphic NEXRAD SYSTEM STATUS display whenever a change occurs in any of the parameters which are normally available for display at the PUP Workstation. A tabular summary of the system status display is provided on both the color monitor and on the associated PUP applications alphanumeric terminal. When the PUP operator receives an indication of a problem, the operator should perform the "Operational Check" steps as outlined in the PUP fault isolation flowcharts. The operational check procedure is performed at the PUP workstation. If a fault condition associated with the PUP group equipment is indicated during the performance of the operational check, the operator should notify the site maintenance technician, who will then perform the appropriate primary and, if required, secondary fault isolation procedures, as directed by the flowcharts. Upon identifying the faulted LRU, the site maintenance technician will replace the LRU, perform any indicated setup or alignment procedures, and retest the system to verify proper operation. A similar process is executed if a fault condition is indicated for the RPG or RDA equipment groups. The operational check procedure cited above will identify the equipment group which is associated with the faulty indications. In the case of the RDA, which is normally an unmanned site, initial fault detection and verification is accomplished at the MSCF. In order to perform further fault isolation and effect corrective action, a technician must then be sent to the RDA site.

B–4.1.2 Off–Line Primary Fault Isolation. This is a computer–assisted fault isolation mode using diagnostic software tests to exercise the system and isolate the faulty LRU. The off–line diagnostic programs used to provide computer–assisted fault isolation are: 1) the RDASOT CPCI06, 2) the Data Processor Diagnostic CPCI07, and 3) the Graphics Processor Diagnostics

CPCI08. Complete instructions for the use of these off–line programs is provided by the applicable fault isolation flowcharts and their associated notesheets.

B–4.1.3 Off–Line Secondary Fault Isolation. This is a non–automated mode of troubleshooting in which supplemental procedures and external test equipment are used to resolve LRU ambiguities arising during primary fault isolation. Often, the primary fault isolation flowcharts will uniquely identify the faulty LRU. In those cases where more than one LRU is identified as faulty (termed as "ambiguous Fault group"), isolation to the single LRU is accomplished with the aid of secondary fault isolation techniques. For each of the ambiguous fault groups, a secondary flow chart exists which incorporates the use of external text equipment (such as a logic probe, multimeter, etc.), single–function troubleshooting diagrams (as required), and detailed test instructions which will result in the unambiguous identification of the faulty LRU.

Section B–5. Component Replacement and Setup Procedures

B–5.1 INTRODUCTION.

This section provides an overview of the replacement of those WSR–88D LRUs which required special handling or set–up procedures. The procedures are contained in Chapter 6 (maintenance) of the equipment group maintenance manuals. The great majority of WSR–88D LRUs are either stand–alone, plug–in, or rack–mounted modules which do not require special replacement instructions. Visual inspection and reference to cabinet layout/interconnection drawings to determine access requirements, cable connections, and fastening hardware suffice for most LRUs. There are three types of LRUs, however, for which special procedures are required. These include certain electro–mechanical assemblies, printed circuit cards, and peripheral communication devices. Each of these types is defined in the following paragraphs.

B–5.1.1 Electro–mechanical Assemblies. The major electro–mechanical assemblies in the WSR–88D equipment which require special handling instructions are located in the transmitter (UD3), the antenna pedestal (UD2), and in the various SCSI chassis. Other LRUs in this category are either radome, tower, or shelter–mounted RPIE devices.

B–5.1.2 Printed Circuit Cards. Many of the printed circuit cards in the WSR–88D digital processors require removal or installation of jumpers (straps) before they are installed into the WSR–88D equipment. Many cards require the proper setting of miniature built–in switches before they are installed. These switches are either rotary, rocker, or dual–in–line package (DIP) style switches. The reason for this requirement is that many of the cards are standard off–the–shelf card assemblies which can function in several different modes or configurations. They must be configured for their specific WSR–88D application at the time of installation. The equipment group maintenance manuals (Chapter 6) provide tables for determining the proper strap/switch setting for each unique card location, and include card layout figures for positive identification of all straps/switches which require technician action.

B–5.1.3 Peripheral Communication Devices. Most of the communication devices used in the WSR–88D equipment (modems, STATMUX, modem eliminator) are universal RS–232 devices capable of operating in a wide variety of applications. Special jumper/switch settings are required to define the operating modes and data transfer protocols. Instructions to accomplish the correct setup for the WSR–88D applications are referenced in the applicable replacement procedure.

INDEX

Subject — Paragraph Figure, Table Number

A

A/B Switch
- Automatic Wideband Communication Switch 3–2.2.5.15
- Dual 3–2.2.5.12

Alphanumeric Products 1–1.2.2.3

Altitude Coverage versus Range
- WSR–88D . . . . . Figure FO1–5

Antenna
- Function 3–1.2.1.2
- Positioning 3–1.2.1.3

Antenna/Feed Assembly 3–2.2.2.2

Antenna/Pedestal 3–2.2.2
- Pedestal Assembly 3–2.2.2.1
- Power Monitor 3–2.2.2.4
- Receiver Front End 3–2.2.2.3

Application Terminal
- PUP Workstation 1–1.4.2.4.1, 3–2.6.2.1

Archive
- PUP 1–3.7.3.7
- RDA 1–3.3.6
- RPG 1–3.5.3.6

Archive II Unit
- RDADP Cabinet 3–2.2.7

Archive III
- Archive Storage Device 3–2.4.1.7
- RPG 3–1.4.1.2

Associated User Class Capabilities . . . . . Table 3–1

Audible Alarm
- PUP Workstation 1–1.4.2.4.5, 3–2.6.2.5

B

Backup Storage Device
- MSCF 3–2.5.1.3

Subject	Paragraph Figure, Table Number
Base Products	
Meteorological Products	1–1.2.2.1
Batch Waveforms	1–3.2.1.4.3
BDDS	
Remote	3–2.4.2.1
RPGPCA	3–2.4.1.1

C

Capabilities	
MSCF	Table 1–17
Function	1–3.6.1
Group	1–3.6
PUP	Table 1–18
FAA Application	1–3.7.4
Functional	1–3.7.3
Group	1–3.7
Performance	1–3.7.2
RDA	Table 1–14
Archiving	1–3.3.6
Calibration	1–3.3.4
Control Features	1–3.3.3
Functions	1–3.3.1
Group	1–3.3
Performance	1–3.3.2
Redundancy	1–3.3.7
RPG	Table 1–16
Functional	1–3.5.3
Functions	1–3.5.1
Group	1–3.5
Performance	1–3.5.2 1–3.6.2
Summary of Functions	Table 1–7
WBC	1–3.4 Table 1–15
Hardwire	1–3.4.1
MLOS	1–3.4.2
Private T1	1–3.4.3
TELCO T1	1–3.4.4
WSR–88D	
Operational Modes	1–3.2.1
System Calibration	1–3.2.6

Subject	Paragraph Figure, Table Number
Capabilities (cont.)	
System Capability Summary	1–3.2.2
System Configuration	1–3.2.3
System Expandability	1–3.2.4
System Maintenance Concept	1–3.2.5
WSR–88D, Summary of Functions	Table 1–7
Channel Service Unit	3–2.2.5.13 3–2.4.1.14
RDADP Cabinet	3–2.2.5.13
RPGPCA	3–2.4.1.14
Color Graphics Display	
PUP Workstation	1–1.4.2.4.3 3–2.6.2.3
Color Graphics Printer	
PUP Workstation	1–1.4.2.4.4 3–2.6.2.6
Color Printer	
MSCF	3–2.5.1.4
Communication Server	
RPGPCA	3–2.4.1.13
Communications	
Redundant System	
FAA	3–1.8.1.3
NWS	3–1.8.2.3
Communications Interface	
RPG	3–1.4.2
LAN	3–1.4.2.2
Point–to–Point	3–1.4.2.1
WAN	3–1.4.2.3
Computer Programs	Table 1–30
Configuration	
WSR–88D	1–1.2.1 Table 1–12
Consumables/Expendables	Table 1–29
Contiguous Doppler Waveforms	1–3.2.1.4.2
Contiguous Surveillance Waveforms	1–3.2.1.4.1
Control Capabilities	
PUP	
Graphics Display	Table 1–19

Subject — Paragraph Figure, Table Number

Control Capabilities (cont.)
WSR–88D . . . . . Table 1–9

Converter/Modem Eliminator Rack
PUP Data Processor Cabinet 3–2.6.1.3.1

CPCI 01 . . . . . 3–1.2.1.6.1

CPCI 03 . . . . . 3–1.4.1.1.1

CPCI 06 . . . . . 3–1.2.1.6.2

CPCI 07 . . . . . 3–1.4.1.1.2

D

Data Array Products
WSR–88D 1–1.2.2.4

DAU
RDADP Cabinet 3–2.2.5.4

Dedicated Adapter Panel
PUP Data Processor Cabinet 3–2.6.1.3.7
RPGPCA 3–2.4.1.20

Dedicated Patch Panel
PUP Data Processor Cabinet 3–2.6.1.3.13
RPGPCA 3–2.4.1.21

Dedicated Port Modem Rack
PUP Data Processor Cabinet 3–2.6.1.3.3

Dedicated–Port Modem
MSCF 3–2.5.1.2

Dedicated/Dial Port Modem Rack
PUP Data Processor Cabinet 3–2.6.1.3.2
RPGPCA 3–2.4.1.12

Derived Products
WSR–88D 1–1.2.2.2

Description 1–1.3
External Principal Users 1–1.3.7
MSCF Group 1–1.3.4
PUP Data Processor Cabinet 1–1.3.5.1
PUP Group 1–1.3.5
Data Processor Cabinet 1–1.3.5.1
System Console 1–1.3.5.3
Workstation 1–1.3.5.2

Subject	Paragraph Figure, Table Number
Description (cont.)	
PUP System Console	1–1.3.5.3
PUP Workstation	1–1.3.5.2
RDA Group	1–1.3.1
Remote RDA Maintenance Terminal	1–1.3.3.2
RPG Group	1–1.3.3
Remote RDA Maintenance Terminal	1–1.3.3.2
RPGPCA	1–1.3.3.1
RPGPCA	1–1.3.3.1
RPIE Group	1–1.3.6
WBC Group	1–1.3.2
Dial Adapter Panel	
PUP Data Processor Cabinet	3–2.6.1.3.6
RPGPCA	3–2.4.1.19
Dial Patch Panel	
PUP Data Processor Cabinet	3–2.6.1.3.5
RPGPCA	3–2.4.1.18
Dial Port Modem Rack	
PUP Data Processor Cabinet	3–2.6.1.3.4
Digital Control Unit (DCU)	
RDADP Cabinet	3–2.2.5.8
Display Processing Function	
PUP	3–1.6.3
Display Processor	
PUP Data Processor Cabinet	3–2.6.1.1
Distant MSCF	1–1.4.2.2.2 3–1.5.1.4 3–2.5.1.1.2

E

Environmental Conditions	
Non–Operating and Operating	Table 1–13
Equipment	
Computer Programs	1–4.6
Consumables/expendables	1–4.5
Illustrated Parts Breakdown (IPB) Manual	1–4.7.10
Manuals	1–4.7.9
MSCF	3–1.5.1.2
Special Tools and Test	1–4.4

Subject	Paragraph Figure, Table Number
Equipment (cont.)	
Standard Tools and Test	1–4.3
Supplied and Variations	1–4.2
Technical Manuals	1–4.7
Work Unit Code (WUC) Manual	1–4.7.11
Equipment Location	1–2.3
Generator Shelter	Figure 1–3
MLOS Radio Cabinet	Figure 1–13
MLOS Shelter	Figure 1–6
PUP Data Processor Cabinet	Figure 1–15
Radar Equipment Shelter	Figure 1–4
Radar Tower and Radome	Figure 1–5
RDADP Cabinet	Figure 1–12
RPGPCA	Figure 1–14
TPMS	
Type 3	Figure 1–8
Type 6	Figure 1–10
Types 1, 2, and 4	Figure 1–7
Types 5, 7, and 9	Figure 1–9
Typical User Facility	Figure 1–11
PUP, MSCF, and RPG	Figure 1–11
Equipment Supplied and Variations	
MSCF	Table 1–23
PUP	Table 1–24
RDA	Table 1–20
RPG	Table 1–22
RPIE	Table 1–25
WBC	Table 1–21
External Controls and Indicators	
Transition Power Source	
Using the LCD Screen	3–2.7.10.1
External Principal Users	
Description	1–1.3.7

F

FAA	
Redundant System	3–1.8.1
	3–1.8.1.1
Communications	3–1.8.1.3
Pedestal	3–1.8.1.1

Subject	Paragraph Figure, Table Number
FAA (cont.)	
Remote Monitoring Subsystem (RMS)	3–1.8.1.4
Status and Control	3–1.8.1.2
Filter	
PUP Data Processor Cabinet	3–2.6.1.3.16.3
Fire Detection and Suppression	
Generator Shelter	3–2.7.3.3
MLOS Shelter	3–2.7.2.3
Radar Equipment Shelter	3–2.7.1.3
Radar Tower and Radome	3–2.7.4.3
Fire Detection and Suppression Function	
Generator Shelter	3–1.7.1.3
MLOS Shelter	3–1.7.4.3
Radar Equipment Shelter	3–1.7.2.3
Radar Tower and Radome	3–1.7.3.3
Radar Tower and Radome	3–1.7.3.3
Frame Relay Hub Router	3–2.5.1.5
Functions	
MSCF	1–3.6.1
	3–1.5.1
PUP	1–3.7.1
RDA	1–3.3.1
RPG	1–3.5.1

G

General Information	
Section A–1 Operating Function Overview	A–1
Section A–2 Operating Procedure Overview	A–1
Generator Shelter	3–1.7.1
Equipment Location	Figure 1–3
Fire Detection and Suppression	3–2.7.3.3
Function	3–1.7.1.3
Heating, Ventilating, and Air Conditioning	3–2.7.3.2
Heating, Ventilating, and Air Conditioning	3–2.7.3.2
Function	3–1.7.1.2
Power Distribution and Lighting	3–2.7.3.1
Auto–Transfer Switch (A1)	3–2.7.3.1.1
Diesel Motor Generator (M1/G1)	3–2.7.3.1.4
Fuel Tank (A6)	3–2.7.3.1.3

Subject	Paragraph Figure, Table Number
Function	3–1.7.1.1
Power Distribution Panel (A2)	3–2.7.3.1.2
RDA Main Power Distribution Panel Disconnect	3–2.7.3.1.7
Generator Shelter (cont.)	
Surge Protector (UD10A20)	3–2.7.3.1.8
TPS Disconnect Switch (10TPS1)	3–2.7.3.1.6
Utility Power Disconnect Switch (S1)	3–2.7.3.1.5
RPIE	3–1.7.1 3–2.7.3
Security and Status Monitoring	3–2.7.3.4
Function	3–1.7.1.4
Graphics	
Display Processor Program	3–3.9
Graphics Display Processor Program	3–3.9.1
Attributes	3–3.9.1.2
Coordinate Transformations	3–3.9.1.3
Cursors, Graphics Tablet, and Color Printer	3–3.9.1.5
Primitives	3–3.9.1.1
Video Functions	3–3.9.1.4
Graphics Display Processor Software Program	3–3.9
Graphics Processing	
PUP	3–1.6.4
Graphics Processor	3–3.3.7
PUP Data Processor Cabinet	3–2.6.1.3.8
Graphics System Device Driver	3–3.9.2
Graphics Tablet	1–1.4.2.4.2
PUP Workstation	1–1.4.2.4.2 3–2.6.2.2

H

Hardwire	1–3.4.1
Hardwired WBC Function	3–1.3.2
Hardwired Signal Processor (HSP)	3–1.2.1.5.1
RDADP Cabinet	3–2.2.5.10
Hardwired WBC	3–2.3.1
Heating, Ventilating, and Air Conditioning	
Generator Shelter	3–2.7.3.2
MLOS Shelter	3–2.7.2.2

Subject	Paragraph Figure, Table Number
Radar Equipment Shelter	3–2.7.1.2
Radar Tower and Radome	3–2.7.4.2
Radome Heating	3–2.7.4.2.1
Heating, Ventilating, and Air Conditioning Function	
Generator Shelter	3–1.7.1.2
MLOS Shelter	3–1.7.4.2
Radar Equipment Shelter	3–1.7.2.2
Radar Tower and Radome	3–1.7.3.2
TPMS	3–1.7.5.2
HSP	1–1.4.1.1
	3–3.3.1
Functions	3–3.4
I	
Illustrated Parts Breakdown (IPB) Manual	1–4.7.10
Introduction	3–3.2
	B–4.1
Electro–mechanical Assemblies	B–5.1.1
MSCF	3–3.2.3
Off–Line Primary Fault Isolation	B–4.1.2
Off–Line Secondary Fault Isolation	B–4.1.3
On–Line Performance Monitoring	B–4.1.1
Peripheral Communication Devices	B–5.1.3
Printed Circuit Cards	B–5.1.2
PUP	3–3.2.4
RDA	3–3.2.1
RPG	3–3.2.2
K	
Keyboard	
RPGPCA	3–2.4.1.5
KVM Switch	
RPGPCA	3–2.4.1.3
L	
LAN Switch	
Remote	3–2.4.2.2
RPGPCA	3–2.4.1.11

Subject	Paragraph Figure, Table Number
LCD Screen	
Transition Power Source	3–2.7.10.1
Limited Distance Modem Rack	
PUP Data Processor Cabinet	3–2.6.1.3.14
Limited Distance Modems	
PUP Workstation	1–1.4.2.4.7 3–2.6.2.4
Local Area Network	
RPG	3–1.4.1.3
Local MSCF	1–1.4.2.2.1 3–1.5.1.3 3–2.5.1.1.1

M

M3200 Processor	
PUP Data Processor Cabinet	3–2.6.1.3.10
Maintenance	
Approach	B–1
Component	
Replacement	B–1
Setup Procedures	B–1
Component Replacement	B–5.1
Electro–mechanical Assemblies	B–5.1.1
Peripheral Communication Devices	B–5.1.3
Printed Circuit Cards	B–5.1.2
Depot	B–2.3
Fault Isolation	B–1
Off–Line Primary Fault Isolation	B–4.1.2
Off–Line Secondary Fault Isolation	B–4.1.3
On–Line Performance Monitoring	B–4.1.1
Off–equipment	B–2.3
On–equipment	B–2.2
On–site Spares	B–2.4
Periodic	B–1 B–3.1
Repair Depot	B–2.5
Setup Procedures	B–5.1
Electro–mechanical Assemblies	B–5.1.1
Peripheral Communication Devices	B–5.1.3
Printed Circuit Cards	B–5.1.2

Subject	Paragraph Figure, Table Number
Maintenance Manual	
PUP	1–4.7.7
RDA	1–4.7.4
RPG	1–4.7.6
Maintenance Manual (cont.)	
RPIE	1–4.7.8
WBC	1–4.7.5
Maintenance Panel	
RDADP Cabinet	3–2.2.5.3
Maintenance Terminal	
RDA Remote	1–1.3.3.2 1–1.4.2.3 3–1.4.4 3–2.4.4
RDADP Cabinet	3–2.2.5.5
Master Signal Generator Function	3–2.2.4.2
Master System Control Function (MSCF)	1–1.4.2.2
Distant MSCF	1–1.4.2.2.2
Local MSCF	1–1.4.2.2.1
Master System Control Function (MSCF) Group	
Description	1–1.3.4
Metadata	1–3.3.6.1
Meteorological Products	
Alphanumeric Products	1–1.2.2.3
Base Products	1–1.2.2.1
Data Array Products	1–1.2.2.4
Derived Products	1–1.2.2.2
Maximum/Minimum Equipment Separation Distances	
Block Diagram	Figure FO1–4
MLOS	1–3.4.2
Antennas	3–2.3.2.2
Radio Cabinet	3–2.3.2.1
Assembly Correlation	Table 3–3
MLOS, Radio Cabinet	
Equipment Location	Figure 1–13
MLOS Shelter	3–1.7.4
Equipment Location	Figure 1–6
Fire Detection and Suppression	3–2.7.2.3
Function	3–1.7.4.3

Subject	Paragraph Figure, Table Number
Heating, Ventilating, and Air Conditioning	3–2.7.2.2
Function	3–1.7.4.2
Power Distribution and Lighting	3–2.7.2.1
Function	3–1.7.4.1
MLOS Shelter (cont.)	
RPIE	3–1.7.4 3–2.7.2
Security and Status Monitoring	3–2.7.2.4
Function	3–1.7.4.4
MLOS Towers	
RPIE	3–2.7.5
MLOS WBC	3–2.3.2
Antennas	3–2.3.2.2
Private T1	3–2.3.3
Radio Cabinet	3–2.3.2.1
TELCO T1	3–2.3.3
Monitor	
RPGPCA	3–2.4.1.4
Monitor and Control Function	
MSCF	3–1.5.1.1
Mouse	
RPGPCA	3–2.4.1.5
MSCF	1–1.4.2.2 3–2.5.1
Capabilities	Table 1–17
Configuration	1–1.2.1.4
Distant MSCF	1–1.4.2.2.2 1–3.6.1.2 3–1.5.1.4 3–2.5.1.1.2
Equipment	3–1.5.1.2
Equipment Supplied and Variations	Table 1–23
Functions	1–3.6.1 3–1.5.1
Group	3–1.5
Local MSCF	1–1.4.2.2.1 1–3.6.1.1 3–1.5.1.3 3–2.5.1.1.1
Monitor and Control Function	3–1.5.1.1
Physical Characteristics	Table 1–5

Subject	Paragraph Figure, Table Number
Remote	3–1.5.1.5
	3–2.5.1.1.3
Security	1–5.3
Access To Users	1–5.3.1.1
MSCF (cont.)	
Accountability	1–5.3.1.4
Management	1–5.3.2
NEXRAD Security Plan	1–5.3.1
Personnel	1–5.3.2.1
Physical	1–5.3.3
Resources Protection	1–5.3.3.1
RPG Availability	1–5.3.1.2
System Integrity	1–5.3.1.3
MSCF Equipment	3–2.5
Backup Storage Device	3–2.5.1.3
Color Printer	3–2.5.1.4
Dedicated–Port Modem	3–2.5.1.2
Distant MSCF	3–2.5.1.1.2
Local MSCF	3–2.5.1.1.1
Frame Relay Hub Router	3–2.5.1.5
MSCF Group	
Description	1–1.3.4
MSCF Processor	3–3.3.5
N	
Narrowband Communication Equipment	
PUP Data Processor Cabinet	3–2.6.1.2
Narrowband Communications	
PUP	3–1.6.1
RPG	3–1.4.2.4
Non–Redundant System	
Operational Equipment Groups	Figure FO3–1
NWS	
Redundant System	3–1.8.2
Communications	3–1.8.2.3
Pedestal	3–1.8.2.1
Status and Control	3–1.8.2.2
O	
Operation	
Program Control	1–1.4
	1–1.4.1

Subject — Paragraph Figure, Table Number

User Control 1–1.4
1–1.4.2

Operational Modes
Clear Air Mode 1–3.2.1.2
Precipitation Mode 1–3.2.1.1
Pulse Waveform Patterns 1–3.2.1.4
Scan Strategies 1–3.2.1.3

Operator's Manual
ORPG 1–4.7.2
PUP 1–4.7.2

Overall Capabilities
WSR–88D . . . . . Table 1–8

P

Parallel Line Extender
PUP Data Processor Cabinet 3–2.6.1.3.15
PUP Workstation 1–1.4.2.4.9

Pedestal
Assembly 3–2.2.2.1
Redundant System
FAA 3–1.8.1.1
NWS 3–1.8.2.1

Pedestal Assembly
Antenna/Feed Assembly 3–2.2.2.2
Master Signal Generator Function 3–2.2.4.2

Physical Characteristics 1–2.4
MSCF . . . . . Table 1–5
PUP . . . . . Table 1–6
RDA . . . . . Table 1–2
RPG . . . . . Table 1–4
WBC . . . . . Table 1–3

Power
Distribution
Transition Power Source 3–1.7.6.1
Transition Power Source 3–1.7.6

Power Administrator MasterSwitch
RPGPCA 3–2.4.1.8

Power Amplifier
RDADP Cabinet 3–2.2.5.7

Subject | Paragraph Figure, Table Number

Power Distribution and Lighting
Generator Shelter 3–2.7.3.1

Power Distribution and Lighting (cont.)
MLOS Shelter 3–2.7.2.1
Radar Equipment Shelter 3–2.7.1.1
Radar Tower and Radome 3–2.7.4.1
TPMS 3–2.7.6.1

Power Distribution and Lighting Function
Generator Shelter 3–1.7.1.1
MLOS Shelter 3–1.7.4.1
Radar Equipment Shelter 3–1.7.2.1
Radar Tower and Radome 3–1.7.3.1
TPMS 3–1.7.5.1

Power Distribution Panel
RPGPCA 3–2.4.1.17

Power Monitor 3–2.2.2.4

Power Supplies and Subsystems
RDADP Cabinet 3–2.2.5.14

Power Supply
PUP Data Processor Cabinet 3–2.6.1.3.16.2

Power Supply Subsystem
PUP Data Processor Cabinet 3–2.6.1.3.16

Precipitation Mode 1–3.2.1.1

Principal User Processor (PUP) Group
Description 1–1.3.5

Principal Users
WSR–88D 1–1.2.3

Private T1 . . . . . 1–3.4.3

Private T1 Link 3–1.3.3

Private T1 WBC 3–2.3.3

Processor Interrelationships
Graphics Processor 3–3.3.7
HSP 3–3.3.1
MSCF Processor 3–3.3.5
PSP 3–3.3.2
PUP Display Processor 3–3.3.6
RDASC Processor 3–3.3.3

Subject	Paragraph Figure, Table Number
RPG Processor	3–3.3.4
Program Control	1–1.4.1
PUP Display Processor	1–1.4.1.5
Program Control (cont.)	
PUP Graphics Processor	1–1.4.1.6
RDA Hardwired Signal Processor (HSP)	1–1.4.1.1
RDA Programmable Signal Processor (PSP)	1–1.4.1.2
RDA Status and Control Processor (RDASC)	1–1.4.1.3
RDASC	1–1.4.1.3
RPG Product Generation Processor	1–1.4.1.4
Programmable Signal Processor (PSP)	3–1.2.1.5.2
RDADP Cabinet	3–2.2.5.9
PSP	1–1.4.1.2 3–3.3.2
Major Events	3–3.5.1
Initialization	3–3.5.1.2
Power Turn On	3–3.5.1.1
Radials	3–3.5.1.4
Start Elevation Layer	3–3.5.1.3
Processing Modes	3–3.5.2
Batch Waveforms	3–3.5.2.4
Contiguous Doppler Waveforms with Range Ambiguity Resolution	3–3.5.2.2
Contiguous Doppler Waveforms without Range Ambiguity Resolution	3–3.5.2.3
Contiguous Surveillance Waveforms	3–3.5.2.1
Signal Processing Modes	3–3.5.3
Collect Input Data	3–3.5.3.7
Initialize PSP	3–3.5.3.8
Measure Bias and Noise Power	3–3.5.3.5
Measure Gain and Balance	3–3.5.3.6
Process Batch Time–Series	3–3.5.3.4
Process Doppler Time–Series	3–3.5.3.3
Process Range–Ambiguous Doppler Time–Series	3–3.5.3.2
Process Surveillance Time–Series	3–3.5.3.1
Software Program	3–3.5
Pulse Waveform Patterns	1–3.2.1.4
Batch	1–3.2.1.4.3
Contiguous Doppler	1–3.2.1.4.2
Contiguous Surveillance	1–3.2.1.4.1
PUP	1–1.3.5
Archiving	1–3.7.3.7
Capabilities	Table 1–18

Subject	Paragraph Figure, Table Number
Configuration	1–1.2.1.5
Control	1–3.7.3.5
Data Storage Assemblies	3–1.6.3.2
PUP (cont.)	
Description	1–1.3.5
Display Processing Function	3–1.6.3
Display Processor	3–1.6.3.1
Interface With Operator/Trainee	3–1.6.3.1.1
Monitor System Performance	3–1.6.3.1.2
Process Weather Products	3–1.6.3.1.3
Display Processor Program	3–3.8
Equipment Supplied and Variations	Table 1–24
Expandability	1–3.2.4.3
FAA Application	1–3.7.4
Functional Block Diagram	Figure FO3–7
Functional Capabilities	1–3.7.3
Functions	1–3.7.1
Graphics Display	
Control Capabilities	Table 1–19
Graphics Processing	3–1.6.4
Group	3–1.6
Maintenance Manual Set	1–4.7.7
Narrowband Communications	3–1.6.1
Operator's Manual	1–4.7.2
Performance Capabilities	1–3.7.2
Physical Characteristics	Table 1–6
Product	
Display	1–3.7.3.2
Request	1–3.7.3.1
Storage	1–3.7.3.3
Product Annotation and Distribution	1–3.7.3.4
Status Monitoring	1–3.7.3.6
VMEbus Interface	3–1.6.2
Workstation Function	3–1.6.5
PUP Data Processor Cabinet	3–2.6.1
Converter/Modem Eliminator Rack	3–2.6.1.3.1
Dedicated Adapter Panel	3–2.6.1.3.7
Dedicated Patch Panel	3–2.6.1.3.13
Dedicated Port Modem Rack	3–2.6.1.3.3
Dedicated/Dial Port Modem Rack	3–2.6.1.3.2
Description	1–1.3.5.1
Dial Adapter Panel	3–2.6.1.3.6

Subject	Paragraph Figure, Table Number
Dial Patch Panel	3–2.6.1.3.5
Dial Port Modem Rack	3–2.6.1.3.4
Display Processor	3–2.6.1.1
PUP Data Processor Cabinet (cont.)	
Equipment Location	Figure 1–15
Filter	3–2.6.1.3.16.3
Graphics Processor	3–2.6.1.3.8
Limited Distance Modem Rack	3–2.6.1.3.14
M3200 Processor	3–2.6.1.3.10
Narrowband Communication Equipment	3–2.6.1.2
Parallel Line Extender	3–2.6.1.3.15
Power Supply	3–2.6.1.3.16.2
Power Supply Subsystem	3–2.6.1.3.16
SCSI Assembly	3–2.6.1.3.9
Expansion	3–2.6.1.3.11
SOPS	3–2.6.1.3.16.1
VME Chassis	3–2.6.1.3.12
PUP Display Processor	1–1.4.1.5 3–3.3.6
PUP Display Processor Software Program	3–3.8
Display	3–3.8.4
Alphanumeric Terminal	3–3.8.4.2
Audible Alert	3–3.8.4.3
Graphics Processor	3–3.8.4.1
Interface with Operator/Trainee	3–3.8.1
Monitor System Performance	3–3.8.2
Process Weather Products	3–3.8.3
Annotate Weather Products	3–3.8.3.2
Form Weather Products	3–3.8.3.3
Handle Communications	3–3.8.3.1
Store/Retrieve Weather Data	3–3.8.3.4
PUP Graphics Processor	1–1.4.1.6
PUP System Console	1–1.3.5.3
Description	1–1.3.5.3
PUP Workstation	1–1.4.2.4 1–1.4.2.4.1 3–2.6.2
Application Terminal	1–1.4.2.4.1 3–2.6.2.1
Audible Alarm	1–1.4.2.4.5 3–2.6.2.5

Subject	Paragraph Figure, Table Number
Color Graphics Display	3–2.6.2.3
Color Graphics Printer	1–1.4.2.4.4
	3–2.6.2.6
PUP Workstation (cont.)	
Description	1–1.3.5.2
Graphics Tablet	1–1.4.2.4.2
	1–1.4.2.4.3
	3–2.6.2.2
Limited Distance Modems	1–1.4.2.4.7
	3–2.6.2.4
Parallel Line Extender	1–1.4.2.4.9
RGBS Line Driver/Equalizer	1–1.4.2.4.8
RGBS Line Drivers/Equalizers	3–2.6.2.7
System Console	1–1.4.2.4.6

R

Radar Data Acquisition (RDA) Group	
Description	1–1.3.1
Radar Equipment	
RPIE	3–1.7.2
Radar Equipment Shelter	3–2.7.1
Equipment Location	Figure 1–4
Fire Detection and Suppression	3–2.7.1.3
Function	3–1.7.2.3
Heating, Ventilating, and Air Conditioning	3–2.7.1.2
Function	3–1.7.2.2
Power Distribution and Lighting	3–2.7.1.1
CEC Coil Control UD7TPS1	3–2.7.1.1.5
Contactor UD7A2, UD7S36, and UD7S37	3–2.7.1.1.4
Distribution Panel (CEC–DP) (UD7TPS2)	3–2.7.1.1.6
Function	3–1.7.2.1
Main Power Distribution Panel UD7A2	3–2.7.1.1.1
Power Panel C (Missoula, MT) and Power Panel D (Medford, OR)	3–2.7.1.1.7
Secondary Power Distribution Panels UD7A3, UD7A29, UD7A30	3–2.7.1.1.2
Surge Protector UD7A11	3–2.7.1.1.3
Security and Status Monitoring	3–2.7.1.4
Function	3–1.7.2.4
Radar Product Generation (RPG) Group	
Description	1–1.3.3
Radar Receiver	3–2.2.4
Receiver Fault Isolation Function	3–2.2.4.3

Subject	Paragraph Figure, Table Number
Test Source Select Function	3–2.2.4.1
Radar Tower and Radome	
Equipment Location	Figure 1–5
Radar Tower and Radome (cont.)	
Fire Detection and Suppression	3–2.7.4.3
Function	3–1.7.3.3
Heating, Ventilating, and Air Conditioning	3–2.7.4.2
Function	3–1.7.3.2
Radome Heating	3–2.7.4.2.1
Power Distribution and Lighting	3–2.7.4.1
Function	3–1.7.3.1
RPIE	3–2.7.4
Security and Status Monitoring	3–2.7.4.4
Function	3–1.7.3.4
Radar Transmitter	3–1.2.1.1.1 3–2.2.3
Radiation Hazard Zones	Figure SS–1
RDA	
Antenna Function	3–1.2.1.2
Antenna Positioning Function	3–1.2.1.3
Antenna/Pedestal	3–2.2.2
Archiving	1–3.3.6
Metadata	1–3.3.6.1
Calibration	1–3.3.5
Capabilities	Table 1–14
Configuration	1–1.2.1.1
Control Features	1–3.3.3
Description	1–1.3.1
Equipment Supplied and Variations	Table 1–20
Expandability	1–3.2.4.1
Functions	1–3.3.1
Group	3–1.2
Equipment	3–2.2
Hardwired Signal Processor (HSP)	1–1.4.1.1 3–1.2.1.5.1
HSP Functions	3–3.4
Maintenance Manual Set	1–4.7.4
Maintenance Terminal	1–1.4.2.1
Monitoring and Error Detection	1–3.3.4
Non–Redundant	Figure FO3–4
Performance Capabilities Summary	1–3.3.2

Subject	Paragraph Figure, Table Number
Physical Characteristics	Table 1–2
Programmable Signal Processor (PSP)	1–1.4.1.2 3–1.2.1.5.2
RDA (cont.)	
PSP Software Program	3–3.5
Radar Receiver	3–2.2.4
Radar Transmitter	3–1.2.1.1.1 3–2.2.3
RDADP Cabinet	3–2.2.5
RDASC Processing Function	3–1.2.1.6
RDASC Processor Software Program	3–3.6
RDASOT for Redundant Configurations	3–1.2.1.7
Receiver Function	3–1.2.1.4
Redundancy	
Metadata	1–3.3.7
Redundant	Figure FO3–12
Remote Maintenance Terminal	3–1.4.4 3–2.4.4
Signal Processing Function	3–1.2.1.5
Status and Command Interface Function	3–1.2.1.8
Status and Control Processor (RDASC)	1–1.4.1.3
Transmitting Function	3–1.2.1.1
VMEbus Interface Function	3–1.2.1.9
Waveguide	3–1.2.1.1.2 3–2.2.1
RDA Maintenance Terminal	
Remote	3–2.4.4
RDA MLOS WBC Function	3–1.3.5
RDA/RPG Gateway	
Purpose	3–2.4.1.10
RDADP Cabinet	3–2.2.5
A/B Switch	3–2.2.5.12
Archive II Unit	3–2.2.7
Automatic A/B Wideband Communication Switch	3–2.2.5.15
CSU	3–2.2.5.13
DAU	3–2.2.5.4
Digital Control Unit (DCU)	3–2.2.5.8
Equipment Location	Figure 1–12
Fixed Disk, 600–MB	3–2.2.5.6.2
Hardwired Signal Processor (HSP)	3–2.2.5.10
Maintenance Panel	3–2.2.5.3

Subject	Paragraph Figure, Table Number
Maintenance Terminal	3–2.2.5.5
Power Amplifier	3–2.2.5.7
Power Supplies and Subsystems	3–2.2.5.14
RDADP Cabinet (cont.)	
Programmable Signal Processor (PSP)	3–2.2.5.9
RDASC M3200 Processor Assembly	3–2.2.5.11
Redundant	3–2.2.5.1
SCSI Assembly	3–2.2.5.6
Streaming Tape Drive	3–2.2.5.6.1
VME Chassis	3–2.2.5.2
Waveguide Pressurization Unit	3–2.2.6
RDASC	1–1.4.1.3
Processing Function	3–1.2.1.6
CPCI 01	3–1.2.1.6.1
CPCI 06	3–1.2.1.6.2
RDASC M3200 Processor Assembly	
RDADP Cabinet	3–2.2.5.11
RDASC Processor	3–3.3.3
RDASC Processor Software Program	3–3.6
Control Pedestal	3–3.6.7
Control RDA	3–3.6.5
Control Signal Processor	3–3.6.6
Form RDA Data	3–3.6.3
Handle Maintenance Terminal	3–3.6.1
Handle RDA Interprocessor Link	3–3.6.9
Handle Remote Monitoring System (RMS)	3–3.6.8
	3–3.6.8.5
Handle RMS Link	3–3.6.8.2
Processing	3–3.6.8.1
Receive RMS Data	3–3.6.8.4
Transmit RMS Data	3–3.6.8.3
Handle Wideband Data	3–3.6.4
Handle Wideband Link Function	3–3.6.4.1
Receive Wideband Data Function	3–3.6.4.3
Transmit Wideband Data Function	3–3.6.4.2
Monitor and Calibrate RDA	3–3.6.2
RDASOT	
Redundant Configurations	3–1.2.1.7
Real Property Installed Equipment (RPIE) Group	
Description	1–1.3.6

Subject	Paragraph Figure, Table Number
Receiver	
Function	3–1.2.1.4
Receiver Fault Isolation Function	3–2.2.4.3
Receiver Front End	3–2.2.2.3
Redundant	
FAA	
RDADP Cabinet	3–2.2.5.1
NWS	
RDADP Cabinet	3–2.2.5.1
Redundant RDA	3–2.8.1
Redundant RPG	3–2.8.2
Redundant System	3–1.8 3–2.8
FAA	3–1.8.1
Communications	3–1.8.1.3
Pedestal	3–1.8.1.1
RMS	3–1.8.1.4
Status and Control	3–1.8.1.2
NWS	3–1.8.2
Communications	3–1.8.2.3
Pedestal	3–1.8.2.1
Status and Control	3–1.8.2.2
Operational Equipment Groups	Figure FO3–3
RDA	3–2.8.1
RPG	3–2.8.2
Relay Box	3–2.4.3
RPG	3–1.4.3
Remote BDDS Equipment	3–2.4.2
BDDS Processor	3–2.4.2.1
LAN Switch	3–2.4.2.2
Router	3–2.4.2.3
Remote BDDS Processor	3–2.4.2.1
Remote LAN Switch	3–2.4.2.2
Remote Monitoring Subsystem (RMS)	
Redundant System	3–1.8.1.4
Remote RDA Maintenance Terminal	1–1.4.2.3 3–1.4.4 3–2.4.4
Description	1–1.3.3.2

Subject	Paragraph Figure, Table Number
Remote Router	3–2.4.2.3
Response Times	
WSR–88D	Table 1–10
RGBS Line Driver/Equalizer	
PUP Workstation	1–1.4.2.4.8
RGBS Line Drivers/Equalizers	
PUP Workstation	3–2.6.2.7
RMS Power Administrators	
RPGPCA	3–2.4.1.22
Router	
Remote	3–2.4.2.3
RPGPCA	3–2.4.1.2
RPG	
Alert Processing	1–3.5.3.8
Archive III	3–1.4.1.2
Archiving	1–3.5.3.6
Associated User Class Capabilities	Table 3–1
Capabilities	Table 1–16
Class Capabilities of Several Principal User Systems	Table 3–2
Communications Interface	3–1.4.2
Point–to–Point	3–1.4.2.1
WAN	3–1.4.2.2
	3–1.4.2.3
Configuration	1–1.2.1.3
Control	
Capabilities	1–3.5.3.4
Functions	1–3.5.3.4.1
Data Processing Function	3–1.4.1
Description	1–1.3.3
Equipment	3–2.4
Equipment Supplied and Variations	Table 1–22
Expandability	1–3.2.4.2
FAA Redundant	Figure FO3–13
Functional Capabilities	1–3.5.3
Functions	1–3.5.1
Group	3–1.4
Hydrometeorological Processing	1–3.5.3.7
Local Area Network	3–1.4.1.3
Maintenance Manual Set	1–4.7.6
Narrowband Communications	3–1.4.2.4

Subject	Paragraph Figure, Table Number
Non–Redundant	Figure FO3–6
Operator's Manual	1–4.7.2
RPG (cont.)	
Performance Capabilities	1–3.5.2 1–3.6.2
Physical Characteristics	Table 1–4
Processor Application Program	
CPCI 03	3–1.4.1.1.1
Processor Diagnostic Test Program Functions	
CPCI 07	3–1.4.1.1.2
Product	
Distribution	1–3.5.3.3
Generation	1–3.5.3.1
Overload Shedding/Recovery Priority Adaptation Parameter	1–3.5.3.5.1
Storage	1–3.5.3.2
Product Generation Processor	3–1.4.1.1
Redundancy	1–3.5.3.9
Relay Box	3–1.4.3
Security	1–5.3
Access To Users	1–5.3.1.1
Accountability	1–5.3.1.4
Management	1–5.3.2
NEXRAD Security Plan	1–5.3.1
Personnel	1–5.3.2.1
Physical	1–5.3.3
Resources Protection	1–5.3.3.1
RPG Availability	1–5.3.1.2
System Integrity	1–5.3.1.3
Software Program	3–3.7
Status Monitoring and Error Detection	1–3.5.3.5
RPG and MSCF System Security	1–5
RPG Class Capabilities of Several Principal User Systems	Table 3–2
RPG MLOS WBC Function	3–1.3.6
RPG Processor	3–3.3.4
RPGPCA	3–2.4.1.6
RPG Processor/Communications Assembly (RPGPCA) Cabinet	3–2.4.1
Description	1–1.3.3.1
RPG Product Generation Processor	1–1.4.1.4
RPG Software Program	3–3.7
Acquire Radar Data	3–3.7.1

Subject	Paragraph Figure, Table Number
Control System	3–3.7.4
Processing Control	3–3.7.4.3
RPG Software Program (cont.)	
System Monitor	3–3.7.4.2
Unit Control	3–3.7.4.1
Distribute Products	3–3.7.3
Handle Communications	3–3.7.3.3
Store/Retrieve Products	3–3.7.3.1
Transform Products	3–3.7.3.2
Generate Products	3–3.7.2
Alphanumeric Products	3–3.7.2.3
Base Products	3–3.7.2.1
Derived Products	3–3.7.2.2
RPGPCA	
Archive Storage Device	3–2.4.1.7
BDDS	3–2.4.1.1
Channel Service Unit	3–2.4.1.14
Communication Server	3–2.4.1.13
Dedicated Adapter Panel	3–2.4.1.20
Dedicated Patch Panel	3–2.4.1.21
Description	1–1.3.3.1
Dial Adapter Panel	3–2.4.1.19
Dial Patch Panel	3–2.4.1.18
Equipment Location	Figure 1–14
Keyboard	3–2.4.1.5
KVM Switch	3–2.4.1.3
LAN Switch	3–2.4.1.11
Modem Rack Assembly	3–2.4.1.12
Monitor	
17 Inch	3–2.4.1.4
Mouse	3–2.4.1.5
Power Administrator MasterSwitch	3–2.4.1.8
Power Distribution Panel	3–2.4.1.17
RDA/RPG Gateway	3–2.4.1.10
RMS Power Administrators	3–2.4.1.22
Router	3–2.4.1.2
RPG Processor	3–2.4.1.6
RS–232/RS–422 Converter	3–2.4.1.16
Short–Haul Modem	3–2.4.1.15
UPS	3–2.4.1.9
RPIE	
Configuration	1–1.2.1.6

Subject	Paragraph Figure, Table Number
Description	1–1.3.6
Equipment Supplied and Variations	Table 1–25
RPIE (cont.)	
Generator Shelter	3–1.7.1 3–2.7.3 Figure FO3–10
Group	3–1.7
Maintenance Manual Set	1–4.7.8
MLOS Shelter	3–1.7.4 3–2.7.2
MLOS Shelter, RDA/RPG	Figure FO3–9
MLOS Towers	3–2.7.5
Radar Equipment Shelter	3–1.7.2 Figure FO3–8
Radar Tower and Radome	3–2.7.4 Figure FO3–11
Shelter	3–1.7.3
RDA/RPG	Figure FO3–9
TPMS	3–2.7.6
TPS	3–2.7.7
TPS Monitoring	3–2.7.9
Transition Power Maintenance Shelter	3–1.7.5
RPIE Equipment	3–2.7
RPIE Group	
Equipment	Figure FO3–2
RS–232/RS–422 Converter	
RPGPCA	3–2.4.1.16

S

Scan Strategies	1–3.2.1.3
Scan Strategy 1	1–3.2.1.3.1
Scan Strategy 2	1–3.2.1.3.2
Scan Strategy 3	1–3.2.1.3.3
SCSI Assembly	
PUP Data Processor Cabinet	3–2.6.1.3.9 3–2.6.1.3.11
RDADP Cabinet	3–2.2.5.6
Security	
MSCF and RPG	1–5.3
Access To Users	1–5.3.1.1

Subject	Paragraph Figure, Table Number
Accountability	1–5.3.1.4
Management	1–5.3.2
Security (cont.)	
NEXRAD Security Plan	1–5.3.1
Personnel	1–5.3.2.1
Physical Security	1–5.3.3
Resources Protection	1–5.3.3.1
RPG Availability	1–5.3.1.2
System Integrity	1–5.3.1.3
Security and Status Monitoring	
Generator Shelter	3–2.7.3.4
MLOS Shelter	3–2.7.2.4
Radar Equipment Shelter	3–2.7.1.4
Radar Tower and Radome	3–2.7.4.4
TPMS	3–2.7.6.3
Security and Status Monitoring Function	
Generator Shelter	3–1.7.1.4
MLOS Shelter	3–1.7.4.4
Radar Equipment Shelter	3–1.7.2.4
Radar Tower and Radome	3–1.7.3.4
TPMS	3–1.7.5.3
Shelter	
Generator	3–1.7.1
MLOS	3–1.7.4
Radar Equipment	3–1.7.2
RPIE	3–1.7.3
Transition Power Maintenance	3–1.7.5
Short–Haul Modem	
RPGPCA	3–2.4.1.15
Signal Processing	
Function	3–1.2.1.5
Signal Processing Modes PSP	3–3.5.3
Collect Input Data	3–3.5.3.7
Initialize PSP	3–3.5.3.8
Measure Bias and Noise Power	3–3.5.3.5
Measure Gain and Balance	3–3.5.3.6
Process Batch Time–Series	3–3.5.3.4
Process Doppler Time–Series	3–3.5.3.3
Process Range–Ambiguous Doppler Time–Series	3–3.5.3.2
Process Surveillance Time–Series	3–3.5.3.1

Subject	Paragraph Figure, Table Number
SOPS	
PUP Data Processor Cabinet	3–2.6.1.3.16.1
Status and Command Interface Function	3–1.2.1.8
Status and Control	
FAA	3–1.8.1.2
Redundant System	
FAA	3–1.8.1.2
NWS	3–1.8.2.2
Summary of Functions	
WSR–88D	Table 1–7
System	
Calibration	1–3.2.6
Configuration	1–3.2.3
Expandability	1–3.2.4
Maintenance Concept	1–3.2.5
System Alarms	
Transition Power Source	3–2.7.10.2
System Console	3–2.6.3
PUP Workstation	1–1.4.2.4.6
System Expandability	
PUP	1–3.2.4.3
RDA	1–3.2.4.1
RPG	1–3.2.4.2
System Processor	Figure FO3–14 Figure FO3–15
Interrelationships	Figure FO3–14
Program Data Flow	Figure FO3–15
System Program and Operating Station Interrelationships	
Pictorial Flow Diagram	Figure FO1–3

T

Technical Manuals	
Equipment	1–4.7.9
Family Tree	Figure FO1–6
Illustrated Parts Breakdown (IPB)	1–4.7.10
PM Workcard Set	1–4.7.3
PUP Maintenance Set	1–4.7.7
RDA Maintenance Set	1–4.7.4

Subject	Paragraph Figure, Table Number
RPG Maintenance Set	1–4.7.6
RPIE Maintenance Set	1–4.7.8
System	1–4.7.1
Technical Manuals (cont.)	
WBC Maintenance Set	1–4.7.5
Work Unit Code (WUC)	1–4.7.11
Technical Manual Sets	
WSR–88D	Table 1–31
TELCO T1	1–3.4.4 3–2.3.3
TELCO T1 Link	3–1.3.4
Test Equipment List	
Standard	Table 1–27
Test Source Select Function	3–2.2.4.1
Tools and Fixtures	
Special Purpose	Table 1–28
Tools List	
Standard	Table 1–26
Tower and Radome	
RPIE	3–1.7.3
Transition Power Maintenance Shelter (TPMS)	3–1.7.5
Equipment Location	
Type 3	Figure 1–8
Type 6	Figure 1–10
Types 1, 2, and 4	Figure 1–7
Types 5, 7, and 9	Figure 1–9
Functional Flow Diagram	Figure FO3–16 Figure FO3–17
Shelter Types 1, 2, 3, and 4	Figure FO3–16
Shelter Types 5, 6, 7, and 9	Figure FO3–17
Heating, Ventilating, and Air Conditioning	3–2.7.6.2
Function	3–1.7.5.2
Power Distribution and Lighting	3–2.7.6.1
Function	3–1.7.5.1
RPIE	3–1.7.5 3–2.7.6
Security and Status Monitoring	3–2.7.6.3
Function	3–1.7.5.3
Transition Power Source (TPS)	3–1.7.6 3–2.7.7
Active System Events Screen	Figure 3–6

Subject	Paragraph Figure, Table Number
Control Panel	3–2.7.9
Transition Power Source (TPS) (cont.)	
Cooling	3–1.7.6.2
Electrical Power Distribution	3–2.7.11
Using the LCD Screen	3–2.7.11
Event History Log Screen	Figure 3–5
External Controls and Indicators	3–2.7.10
System Alarms	3–2.7.10.2
Using the LCD Screen	3–2.7.10.1
Load Amps Meters Screen	Figure 3–4
Maintenance Bypass	3–2.7.8.5
Mimic Screen	Figure 3–8
Monitor Panel	3–2.7.10 Figure 3–1
External Controls and Indicators	3–2.7.10
Monitoring	
Maintenance Bypass	3–2.7.9.1
RPIE	3–2.7.9
Operating Modes	3–2.7.8
Battery Mode	3–2.7.8.2
Bypass Mode	3–2.7.8.4
NORMAL Mode	3–2.7.8.1
Shutdown	3–2.7.8.3
Parts of the LCD Screen	Figure 3–2
Port Setup Screen	Figure 3–10
Power Distribution	3–1.7.6.1
RPIE	3–2.7.7
Simplified One–Line TPMS Electrical Distribution	Figure 3–11
Status Monitoring	3–1.7.6.3
System Meters Screen	Figure 3–3
Time Setup Screen	Figure 3–9
Unit Statistics Screen	Figure 3–7
Transition Power Source Operating Modes	3–2.7.8
Transmitting	3–1.2.1.1
Function	3–1.2.1.1
Typical User Facility	
Equipment Location	
PUP, MSCF, and RPG	Figure 1–11

U

UPS	
RPGPCA	3–2.4.1.9

Subject — Paragraph Figure, Table Number

User Control 1–1.4.2
MSCF 1–1.4.2.2
Distant MSCF 1–1.4.2.2.2
Local MSCF 1–1.4.2.2.1
PUP Workstation 1–1.4.2.4
Application Terminal 1–1.4.2.4.1
Audible Alarm 1–1.4.2.4.5
Color Graphics Display 1–1.4.2.4.3
Color Graphics Printer 1–1.4.2.4.4
Graphics Tablet 1–1.4.2.4.2
Limited Distance Modems 1–1.4.2.4.7
Parallel Line Extender 1–1.4.2.4.9
RGBS Line Driver/Equalizer 1–1.4.2.4.8
System Console 1–1.4.2.4.6
RDA Maintenance Terminal 1–1.4.2.1
Remote RDA Maintenance Terminal 1–1.4.2.3

V

VME Chassis
PUP Data Processor Cabinet 3–2.6.1.3.12
RDADP Cabinet 3–2.2.5.2

VMEbus Interface
PUP 3–1.6.2

VMEbus Interface Function 3–1.2.1.9

W

Waveguide 3–1.2.1.1.2
3–2.2.1

Waveguide Pressurization Unit
RDADP Cabinet 3–2.2.6

WBC
Capabilities . . . . . Table 1–15
Configuration 1–1.2.1.2
Description 1–1.3.2
Equipment 3–2.3
Equipment Supplied and Variations . . . . . Table 1–21
Functional Block Diagram . . . . . Figure FO3–5
Hardwire 1–3.4.1
Hardwired WBC Function 3–1.3.2

Subject	Paragraph Figure, Table Number
WBC (cont.)	
Hardwired WBC	3–2.3.1
Maintenance Manual Set	1–4.7.5
MLOS	1–3.4.2
MLOS WBC	3–2.3.2
Physical Characteristics	Table 1–3
Private T1	1–3.4.3
Private T1 Link	3–1.3.3
RDA MLOS WBC Function	3–1.3.5
	3–1.3.6
TELCO T1	1–3.4.4
TELCO T1 Link	3–1.3.4
Wideband Communications Link	3–1.3.1
Weather Products	
WSR–88D	Table 1–11
Weather Products Users	
Associated and Non–Associated	
Categories and Capabilities	Table 1–1
Wideband Communications	
Group	3–1.3
Wideband Communications Group	
Description	1–1.3.2
Wideband Communications Link	3–1.3.1
Workstation Function	
PUP	3–1.6.5
Extension	3–1.6.5.2
Normal	3–1.6.5.1
WSR–88D	Figure 1–1
	Figure 1–2
Altitude Coverage versus Range	Figure FO1–5
Capabilities	1–3.2
	1–3.2.2
Configuration	1–1.2.1
	1–2.2
	Table 1–12
Control Capabilities	Table 1–9
Description	1–1.3
Equipment Location	1–2.3
Meteorological Products	1–1.2.2
MSCF Group	3–1.5
	3–2.5

Subject	Paragraph Figure, Table Number
WSR–88D (cont.)	
Overall Capabilities	Table 1–8
Physical Characteristics	1–2.4
Pictorial Functional Flow Diagram	Figure FO1–2
Pictorial Overview	Figure FO1–1
Principal Users	1–1.2.3
PUP Group	3–1.6
	3–2.6
RDA Group	3–1.2
Equipment	3–2.2
Redundant System	3–1.8
	3–2.8
Response Times	Table 1–10
RPG Group	3–1.4
Equipment	3–2.4
RPIE Group	3–2.7
RPIE Group	3–1.7
Technical Manual Sets	Table 1–31
Typical Site	
Configurations	Figure 1–1
Layout	Figure 1–2
WBC Group	3–1.3
Equipment	3–2.3
Weather Products	Table 1–11

GLOSSARY

Acronym or Non–Standard Term	Definition
A & E	Architects and Engineers
ABM	Asynchronous Balanced Mode
AC	Alternating Current
ACU	Arithmetic Control Unit, Automatic Call Unit
ACUI	Automatic Calling Unit Interface
A/D	Analog–to–Digital
ADCCP	Advanced Data Communications and Control Procedures
AF	Air Force
AFB	Air Force Base
AGC	Automatic Gain Control
AGL	Elevation Angle and Height
AIR	Auxiliary Instruction Register
Aliasing	The process by which frequencies too high to be analyzed with the given sampling interval appear at a frequency less than the Nyquist frequency.
ALB	Analog Loopback
ALU	Arithmetic Logic Unit
AM	Amplitude Modulation
AMP	Amplifier
A/N	Alphanumeric
ANSI	American National Standards Institute
Areal	Amount of Area Covered
ARTCC	Air Route Traffic Control Center
ATE	Automatic Test Equipment
AU	Arithmetic Unit

GLOSSARY – CONT.

Acronym or Non–Standard Term	Definition
AWIPS	Advanced Weather Interactive Processing System
AZ	Azimuth

B

B	Batch
Barbs	A symbol used to represent wind speed and direction. A line pointing in the direction of the wind with smaller lines protruding perpendicular from it to represent speed.
BB	Broad Band
B BUS	Bottom Bus
Bcur	Current BIAS, the current multiplicative factor that adjusts for the radar bias when compared to surface precipitation measurements.
BDDS	Base Data Distribution Server
BIT	Built In Test
BITE	Built–In Test Equipment
BIU	Bus Interface Units
BP	Bandpass
BPI	Bi–Polar Interface
BYTE	8 Contiguous Bits

C

CA	Computer Accelerator
CC	Condition Code
CC/EDS	Commercial Computers/Equipment Documentation Set
CCITT	International Telegraph and Telephone Consultative Committee
CCM	Command Control Module

GLOSSARY – CONT.

Acronym or Non–Standard Term	Definition
CD	Contiguous Doppler
CD–ROM	Compact Disc – Read Only Memory
CDS	Control Diagnostic System
CMM	Composite Memory Module
COHO	Coherent Oscillator
CONUS	Continental United States
COTS	Commercial Off the Shelf
CPC	Computer Program Component
CPCI	Computer Program Configuration Items
CPU	Computer Processing Unit
CRC	Cyclic Redundancy Check
CRT	Cathode Ray Tube
CS	Contiguous Surveillance/Control Store
CSAR	Control Store Address Register
CSU	Channel Service Unit
CTL	Control
CTM	Channel Terminal Manager
CW	Continuous Wave
CWSU	Center Weather Service Unit

D

Dealiase	The action or process of restoring the correct frequency information (which represents wind velocity) to a digital signal which may have become distorted during the conversion from an analog signal.
D/A	Digital–to–Analog
DAU	Data Acquisition Unit

GLOSSARY – CONT.

Acronym or Non–Standard Term	Definition
dB	Decibels
dBz	Reflectivity
DC	Direct Current
DCB	Device Control Block
DCE (See also DTE)	Data Circuit–terminating Equipment, Data Communications Equipment
DCTE	Data Circuit Terminating Equipment
DCU	Digital Communications Unit
DCUV	DC Under–Voltage
DIMM	Dual In–Line Memory
DIO	Digital Input/Output
DIOS	Digital Input/Output System
DIP	Dual–In–line Package
Distant MSCF	Distant Master System Control Function. A DoD or FAA MSCF. The RPG in in the RDA shelter while the Distant MSCF is with the primary PUP.
DLB	Digital Loopback
DMA	Direct Memory Access
DME	Data Manipulation Executive
DMI	Direct Memory Interface
DMS	Data Management System
DOC	Department of Commerce
DoD	Department of Defense
DOT	Department of Transportation
DP	Data Processor
DRAM	Decoder RAM

GLOSSARY – CONT.

Acronym or Non–Standard Term	Definition
DROM	Decoder ROM
DRT	Round Trip Distance
DSU	Data Service Unit
DTE (See also DCE)	Data Terminal Equipment, Data Transfer Engine

E

ECU	Environmental Control Unit
EDMA	Extended DMA
E/ET	End To End Test
EHB	Engineering Handbook
EMAM	Enhanced Memory Access Multiplexer
EMAR	EDMA Memory Access Register
EPF	Early Power Failure
EEPROM	Electronically Erasable Programmable Read–Only Memory
EPROM	Erasable Programmable Read–Only Memory
ESD	Electrostatic Sensitive Device
ET	Echo Tops
ETC	Echo Tops Counter
Exp	Expanded

F

FAA	Federal Aviation Administration
FAT	Factory Acceptance Test
FR	Flag Register
FCS	Frame Check Sequence, Fixed Control Store

GLOSSARY – CONT.

Acronym or Non–Standard Term	Definition
FD	Doppler Frequency
FFT	Fast Fourier Transform
FIFO	First In, First Out
FM	Frequency Modulation
FMH	Federal Meteorological Handbook
FPU	Floating Point Unit

G

Gb	Gigabyte
GDR	Good Data Register
GFI	Government Furnished Information
GHz	Gigahertz
GI	Graphics Interface
GPIF	Graphics Peripheral Interface
GUY	Tension Support rope for antenna

H

HCI	Human Computer Interface
HDLC	High Density Line Control
HDLCM	High Density Line Conditioning Module
HSDH	High Speed Data Handler
HSP	Hardwired Signal Processor
HVAC	Heat, Ventilation, and Air Conditioning
Hydrometeorological	Components (such as temperature, pressure, humidity, wind, rainfall, and cloudiness) which determine the state of the weather.

GLOSSARY – CONT.

Acronym or Non–Standard Term	Definition
Hz	Hertz

I

I/O	Input/Output
IAW	In Accordance With
IAGC	Instantaneous Automatic Gain Control
ICD	Interface Control Document
ID	Identification
IDR	Input Data Register
IF	Intermediate Frequency
IOC	Input/Output Controller
IOT&E	Initial Operational Test and Evaluation
IPC	Intelligent Peripheral Controller
I Phase	In Phase
IPP	Image Pipeline Processor
IR	Instruction Register
ISC	Input Signal Condition
ISU	Interference Suppression Unit

K

Kb	Kilobyte (kilo = 1,024)
Kbits	Kilobits
Kbps	Kilobytes per second

GLOSSARY – CONT.

Acronym or Non–Standard Term	Definition
Klystron	An electronic tube used as a low–power oscillator or a high–power amplifier at ultrahigh frequencies. Noted for exceptional stability over long period of transmission.
Km	Kilometers
KVM Switch	Keyboard/Video/Monitor Switch
kW	Kilowatts

L

LAL	Local Analog Loopback
LBC	Local Bank (Memory) Controller
LCD	Liquid Crystal Display
LCM	Line Conditioner Module
LDM	Limited Distance Modem
LED	Light Emitting Diode
LFM	Limited Area Fire Mesh
LH	Left Hand
LIN	Linear
LMA	Local Memory Address
LMB	Local Memory Bus
LOC	Location Counter
Local MSCF	Local Master System Control Function. A NWS MSCF located in the same building as the RPG.
LOG	Logarithmic
LOS	Line of Sight
LPI	Lines Per Inch

GLOSSARY – CONT.

Acronym or Non–Standard Term	Definition
LR	Link Register
LRC	Longitudinal Redundancy Check
LRU	Line Replaceable Unit
LSB	Least Significant Bit
LSU	Loader Storage Unit
LTD	Limited Distance Modem
LUT	Lookup Table

M

MAR	Memory Address Register
MAT	Memory Address Translator
MAX	Maximum
Mb	Megabyte (mega = 1,048,576)
MBB	Maintenance Bypass Breaker
MBM	Maintenance Bypass Module
Mb/s	Megabits Per Second (mega = 1,000,000)
MRD	Memory Data Register
MDS	Memory Data System
Meso	Center
Mesocyclone	A 3–dimensional region in a storm that rotates (usually cyclonically) and is closely correlated with severe weather.
MHz	Mega Hertz
Min	Minute(s)
MIN	Minimum
MIP	Mega Instructions Per Second (mega = 1,000,000)

GLOSSARY – CONT.

Acronym or Non–Standard Term	Definition
MLOS	Microwave Line of Sight
MMI	Man–Machine Interface
Mode A	Convective Mode (Precipitation/Severe Weather)
Mode B	Clear Air Mode
MODEM	Modulate, Demodulate
MPC	Multiple Peripheral Control
MPE	Micro–Interrupt Priority Encoder
M/S	Meters Per Second
MSEcur	Current Mean Square Error (MSE) of current BIAS value.
MSB	Most Significant Bit
MSCF	Master System Control Function
MSL	Mean Sea Level
MTBF	Mean Time Between Failures
MTC	Magnetic Tape Controller
MUX	Multiplexer

N

N/A	Not Applicable
NB	Narrowband
NEC	National Electrical Code
NEXRAD	Next Generation Weather Radar
NHA	Next Higher Assembly
NHC	National Hurricane Center
NMC	National Meteorological Center

GLOSSARY – CONT.

Acronym or Non–Standard Term	Definition
NR	No Requirement
NS	Nanosecond
NUOC	NEXRAD User's Operation Concept
NWS	National Weather Service
Nyquist	Transmitting pulse signals through a system

O

ODC	Optical Disk Controller
ODR	Output Data Register
OED	Overhead Encoder/Decoder
OLTE	Optical Line Terminating Equipment
OMT	Othogonal Mode Transducer
OS	Operating System

P

PA	Program Address
PAL	Programmable Array Logic
PCI	Peripheral Component Interconnect
PCU	Pedestal Control Unit
PGP	Product Generation Processor
PIC/LFC	Precision Interval Clock/Line Frequency Check

GLOSSARY – CONT.

Acronym or Non–Standard Term	Definition
PIE	Priority Interrupt Encoder
PMFL	Performance Monitoring and Fault Localization
P–MUX	Private MUX
PPA	Pedestal Power Amplifier
PPAU	Pedestal Power Amplifier Unit
PPF	Primary Power Fail
PPI	Plan Position Indicator
ppm	Page(s) Per Minute
PPP	Pulse Pair Processing
PPU	Power Processing Unit
PRF	Pulse Repetition Frequency
PRI	Pulse Repetition Interval
PROM	Programmable Read–Only Memory
PRT	Pulse Repetition Time
PSP	Programmable Signal Processor
PSTN	Public System Telephone Network
PSW	Program Status Word
PUES	Principal User External System
PUP	Principal User Processor
PWA	Printed Wire Assembly

Q

Q	Quadrature
QAM	Quadrature Amplitude Modulation
QSA	Quad Synchronous Adapter

GLOSSARY – CONT.

Acronym or Non–Standard Term	Definition
R	
RAL	Remote Analog Loopback
RALU	Register Arithmetic Logic Unit
RAM	Random Access Memory
RBUS	Result Bus
RCM	Radar Coded Message
RCVR	Receiver
RD	Receiver Data
RDA	Radar Data Acquisition
RDADP	Radar Data Acquisition Data Processor
RDASC	Radar Data Acquisition Status and Control
RDASOT	Radar Data Acquisition System Operational Test
RDL	Remote Digital Loopback
RDMI	Receive Data Message Initialization
RF	Radio Frequency
RFC	River Forecast Center
RGBS	Red, Green, Blue, Sync
RGDAC	Rain Gauge Data Acquisition Computer
RH	Right Hand
RMAX	Maximum Range
RMS	Remote Monitoring Subsystem
RMS	Root Mean Square

GLOSSARY – CONT.

Acronym or Non–Standard Term	Definition
ROC	Radar Operations Center (formerly OSF)
ROM	Read–Only Memory
RPG	Radar Product Generation
RPGOP	Radar Product Generation Operational Position
RPGPCA	RPG Processor/Communications Assembly
RPIE	Real Property Installed Equipment
RPM	Revolutions Per Minute
RPS	Routine Product Set
RRRAT	Radar Data Acquisition / Radar Product Generation Remote Access Terminal
RST	Remote Self–Test
RTS	Request to Send
RX	Receiver

S

S	Sample
SAR	Specific Absorption Rate
SBI	System Bus Interface
SCA	Shear Contour Azimuth
SCM	Supervisory Contact Module
SCR	Silicon Control Rectifier, Shear Contous Radial
SCSI	Small Computer System Interface
SDF	Software Development Facility
SDR	Status Data Request
SELCH	Select Channel

GLOSSARY – CONT.

Acronym or Non–Standard Term	Definition
SERD	Support Equipment Requirement Data
SIMD	Single Instruction, Multiple Data
SHEF	Standard Hydro–meteorological Exchange Format
SMI	Serial Maintenance Interface
SOPS	Swing–Out Power Subsystem
SOT	System Operability Testing
SP	Signal Processor
SPS	Signal Processor Subsystem
SS	Storm Series
STALO	Stable Local Oscillator
STATMUX	Statistical Multiplexer
STM	Storage Module
SYNC	Synchronous
SW	Spectrum Width
SWP	Severe Weather Probability

T

T Bus	Top Bus
TBD	To Be Determined
TCP	Transmission Control Protocol
TD	Transmitter Data
TODY	Time of Day Clock
TPMS	Transition Power Maintenance Shelter
TPS	Transition Power Source
TPS JB	Transmitter Power Supply Junction Box

GLOSSARY – CONT.

Acronym or Non–Standard Term	Definition
TRM	Transmitter Receiver Module
TSG	Test Sequence Generator
TTL	Transistor–Transistor Logic
TVS	Tornado Vortex Signature
TVSA	Tornado Vortex Signature Algorithms
TX	Transmitter

U

UART	Universal Asynchronous Receiver/Transmitter
UD	Unit Designation
UIB	TPS Input Breaker
ULI	Universal Logic Interface
UOB	TPS Output Breaker
UPS	Uninterruptible Power Supply

V

V	Volts, Velocity
Vac	Volts, alternating current
VAD	Velocity Azimuth Display
VCI	VMEbus to Concurrent I/O Bus Interface
VCP	Volume Coverage Pattern
Vdc	Volts, direct current
VIC	VMEbus Interface Controller VME Interface Chip
VIL	Vertically Integrated Liquid

GLOSSARY – CONT.

Acronym or Non–Standard Term	Definition
VME	Versa Module Eurocard
VMEbus	Versa Module Eurocard Bus
VSWR	Voltage Standing Wave Ratio
VT	Video Twelve
V&V	Verification and Validation

W

WARP	Weather And Radar Processor
WB	Wideband
WBC	Wideband Communications
WCCM	Wideband Communications Control Module
WER	Weak Echo Region
WF	Waveform
WFO	Warning and Forecast Office
WL	Wavelength
WSFO	Weather Service Forecast Office
WSR	Weather Surveillance Radar

X

XMTR	Transmitter

Z

ZBID	Zero–Bit Insert/Delete
ZMAR	Fault Memory Address Register