NWS: EHB-6, Modification Note 57
FAA: EEM Modification Handbook 6345.1 CHG 20, Chap 17

HIGH-SPEED PUP UPGRADE FROM 14.4 KBPS TO 33.6 KBPS AND INSTALL A/B SWITCHES

DOPPLER METEOROLOGICAL RADAR WSR-88D

DoD Distribution Statement A - Approved for public release; distribution is unlimited.

PUBLISHED UNDER AUTHORITY OF THE SECRETARIES OF
COMMERCE, THE AIR FORCE, THE NAVY, AND TRANSPORTATION

Issuance Number: EHB 6-00-05
Issuance Date: 18 May 2000
NWS Rescission Date: 1 June 2001

FAA APPROVAL:

James H Pritchard Date 4-10-2000

Raymond M. Long
Program Director for Operational Support

NWS APPROVAL:

Date 5/10/00

John McNulty
Chief, Engineering Division

1. SUBJECT

High-Speed Principal User Processor (PUP) Upgrade from 14.4 kbps to 33.6 kbps and Install A/B Switches.

2. PURPOSE

The purpose of this routine document is to provide instructions to upgrade to 33.6 kbps modems and to install an A/B switch on the 33.6 kbps dedicated data lines from the Radar Product Generation (RPG) to the PUP and Advanced Weather Interactive Processing System (AWIPS). This modification enables the meteorologists to switch the 33.6 kbps data rates between the PUP and AWIPS. The authority for this modification is Operational Support Facility (OSF) Engineering Change Proposal (ECP) F0124, NWS RPGOP for FAA Redundant Radars.

DO NOT accomplish this modification until after software build 10.0 has been installed and is operational.

All information relative to these switches, as contained in this document, should be retained for reference by both the electronics technicians and operators.

NOTE: This change has been reviewed and evaluated for impact upon year 2000 (Y2K) functionality and has no detrimental effect upon Y2K compliance issues.

For additional information concerning this document, contact the OSF Hotline, Norman, Oklahoma; phone number: (800) 643-3363 or (405) 366-2980 or by e-mail at Hotline@osf.noaa.gov. An electronic copy of this document can be found at the following internet address: www.osf.noaa.gov/ssb/sysdoc/techman/tmlinks.htm

3. SITES AFFECTED

See ATTACHMENT 3.

4. ESTIMATED COMPLETION DATE

This modification must be completed no later than 60 days after receipt of this document and kit.

5. EQUIPMENT AFFECTED

Radar Product Generation (RPG) Group.
Principal User Processor (PUP) Group.

6. SPARES AFFECTED

Not applicable.

7. MODIFICATION ACCOMPLISHED BY

Site electronics technicians, with the assistance of the site operators, will perform this task. Two technicians are required to perform the attached procedures at each location. Participants will be FAA electronic technicians, NWS electronic systems analysts (ESA), and AWIPS Hewlett Packard (HP) technicians. Close coordination between participants is required to minimize radar data down time. This modification MUST be accomplished by NWS and FAA sites simultaneously.

8. MATERIAL REQUIRED

Verify the PUP Dedicated 66 punchdown block containing a 50-pin TELCO plug is available in the WSR-88D PUP demarcation frame cabinet, located in the TELCO room. This punchdown block is usually located in the lower right hand corner, next to the PUP dial punchdown block. If one is not available, procure and install the punchdown block to return the Demarcation Frame cabinet to the original baseline configuration.

Nomenclature	Part Number	NSN	Qty
RPG Kit			
Codex 33.6 kbps modem with SDC	1219739-210	5895-01-467-1607	2
Federal Express label		NWS0-00-890-0001	2
PUP Kit			
Codex 33.6 kbps modem with SDC	1219739-210	5895-01-467-1607	1
RJ 45 patch cord, 7 ft	2200046-201	NWS9-82-450-0004	3
Twisted cable, 20 ft	WC63-5BB4U	6145-01-458-9237	1
Switch, RJ 45	2200042-201	5930-01-437-0752	1
Kit, PUP/AWIPS label	2340000-302	NWS0-00-400-0001	1
Federal Express label		NWS0-00-890-0001	1

9. SOURCE OF MATERIALS

Kits are requisitioned by the OSF Logistics Section and shipped at no cost to the site.

10. SPECIAL TOOLS AND TEST EQUIPMENT REQUIRED

Not applicable.

11. TIME AND PERSONNEL REQUIRED

Work Phases	Work-hours
Unpacking	0.0
Disassembly	0.5
Installation	3.5
Assembly	0.0
Operational Check	2.0
Total Work-hours	6.0

12. DOCUMENTS AFFECTED

a. Technical Manual, System Description, dated January 15, 1999
NWS EHB6-500, Change 2
FAA TI 6345.1 V1, Change 2

b. Technical Manual, Illustrated Parts Breakdown, dated May 15, 2000
NWS EHB 6-501
FAA TI 6345.1 V2

c. Maintenance Instructions, Radar Product Generation (RPG), dated July 15, 1998
NWS EHB6-520, Change 4
FAA TI 6345.1 V11, Change 4

d. Maintenance Instructions, Principal User Processor (PUP) Group, dated January 15, 1998
NWS EHB6-530, Change 3
FAA TI 6460.1 V15, Change 3

13. VERIFICATION STATEMENT

This modification was successfully installed at WSFO Honolulu, Hawaii, and Molokai, Hawaii.

14. DISPOSITION OF REMOVED AND REPLACED PARTS/MATERIALS

The old 14.4 kbps modems shall be shipped back to the OSF in the boxes the new 33.6 kbps modems came in using the Federal Express labels provided in the kit. Dispose of cable 41W74 locally.

15. PROCEDURES

Perform the procedures in the following attachments:

ATTACHMENT 1 - Installation Procedures for the 33.6 kbps Data Circuit

ATTACHMENT 2 - Site Specific Narrowband Circuit Reports

16. FAA DISTRIBUTION

This directive is distributed to selected offices and services within Washington headquarters, the William J. Hughes Technical Center, the Mike Monroney Aeronautical Center, regional Airway Facilities divisions, and Airway Facilities field offices having the following facilities/equipment: NXRAD.

17. CHANGES TO TABLE OF CONTENTS (FAA)

This chapter will be included in the next revision to the table of contents for FAA Order 6345.1, Electronic Equipment Modification Handbook - Next Generation Weather Radar (NEXRAD).

18. RECOMMENDATIONS FOR CHANGES (FAA)

Forward any recommendations for changes to this directive through normal channels to the National Airway Systems Engineering Division, AOS-200, Operational Support.

19. REPORTING INSTRUCTIONS

a. NWS

Report completed task on WS Form A-26, Engineering Management Reporting System Maintenance Record, according to instructions in EHB-4, Part 2, using reporting code PUP. Also, record the modification number in block 17(a) as 57. (See ATTACHMENT 5 for a completed sample of WS Form A-26.)

b. FAA (Changes to Recorded Data)

Enter this document number, date, and chapter number in the appropriate FAA Form 6032-1, Airway Facilities Modification Record.

c. All Agencies

Complete ATTACHMENT 4 and fax, mail, or e-mail information to:

(1) Mail Address: System Support Branch, Logistics Section
Operational Support Facility
3200 Marshall Ave., Suite 101
Norman, Oklahoma 73072-8028

(2) Fax Number: (405) 366-6553
ATTN: Logistics Section

(3) E-mail Address: Logistics@osf.noaa.gov

ATTACHMENT 1

INSTALLATION PROCEDURES FOR THE 33.6 KBPS DATA CIRCUIT

Tools Required

Electrostatic Sensitive Device (ESD) component handling kit
Screwdriver set, Phillips
Scissors

Initial Conditions/Preliminary Setup

Participants will be FAA electronic technicians, NWS electronic systems analysts (ESA) and operations technicians, and AWIPS Hewlett Packard (HP) technicians. Close coordination between participants **IS REQUIRED** before accomplishing the following procedures. One RPG modem will be installed and verified on a single channel before installation on the other channel.

NOTE

If you have the RDA/RPG Remote Access Terminal installed, refer to the corresponding keystrokes applying to your system (i.e., <Enter> versus <Return> and <Alt><Tab> versus <Shift> and <Port> keys). RDA/RPG Remote Access Terminal keystroke differences will be located in the conversion chart provided with the RDA/RPG Remote Access Terminal installation kit. All keystrokes having a double underline will require you to refer to the conversion chart for the applicable key strokes (i.e., <Return> will convert to <Enter>).

NOTE

Handling of ESDs. All WSR-88D circuit cards are ESDs and must be handled using the special ESD handling procedures given below. A grounded conductive mat with wrist strap and clip lead, and a suitable conductive bag, are required to provide proper component protection. Use the following procedure.

****ESD** CAUTION **ESD****

The ESD symbol establishes the requirement that all paragraphs/ steps, figures with illustrations, and diagrams identified by **ESD** must be followed as written and in accordance with ESD handling procedures. Failure to comply could result in damage to the equipment.

1. At the workbench, perform the following steps on the RPG modems:

   a. Remove the 33.6 kbps modems from their conductive packages and place the modems on the ESD mat. Save the modem boxes for shipment of the 14.4 kbps modems back to the OSF.

ATTACHMENT 1 (Continued)

INSTALLATION PROCEDURES FOR THE 33.6 KBPS DATA CIRCUIT

b. Check/set the Dual In-Line Package (DIP) switches on both new modems as shown in Figure 2. Switches 1 and 2 are **ON**; all others are **OFF**.

2. Perform the following RPG modem installation procedures:

a. At the Unit Control Position (UCP), RPG 1 and RPG 2, verify both RPGs are in remote control of the RDA by entering **RD<Return>** and verify the following is displayed:

RDA
CNTRL
RPG

b. If the RPG is not in control, enter **ENRC<Return>** at the RDA1 and RDA2 Man Machine Interface (MMI). If either RPG is not in control, perform step 2.c., otherwise proceed to step 2.d.

c. At the UCP, enter **RD,SE<Return>**.

d. If RPG 1 is not active, enter **RE,C,***password***<Return>** to make channel 1 the active channel.

NOTE

Verify with the NWS office and refer to Figure 4. and ATTACHMENT 2, Site Specific Narrowband Circuit Report, to correctly locate the PUP/AWIPS 14.4 kbps modem location.

Dedicated modems are located in slots 12 through 21 and slots 9 and 10. The port number of the VME rack corresponds to the **DEVICE ID MNE** column of the Reconfiguration Control Screen (see ATTACHMENT 2). The **LINETYPE** column shows whether the modem is dial (**dialin**) or dedicated (**dedic**).

3. Perform the following steps to determine the location of the modem to be replaced:

a. At the UCP, enter **AD,***password1***,NB,VI<Return>** and verify the Reconfiguration Control Screen with ATTACHMENT 2 printout of the reconfiguration control screen. The bold text in ATTACHMENT 2 is the final configuration after completion of these procedures. Note any discrepancies and return with comments on ATTACHMENT 4.

b. Record the **DEVICE ID MNE** of the first line with**LINETYPE DEDIC** J_____. (This is the modem in slot 12.)

c. Record the **DEVICE ID MNE** of the line with bold text in ATTACHMENT 2 J_____. (This is the modem to be replaced.)

ATTACHMENT 1 (Continued)

INSTALLATION PROCEDURES FOR THE 33.6 KBPS DATA CIRCUIT

d. Starting with slot 12 through 21 and back to slots 9 and 10 of the modem rack, count from the J number recorded in step 3.b. through the J number recorded in step 3.c.

e. The slot you end on is the modem to be replaced.

f. On the inactive channel, remove the PUP/AWIPS 14.4 kbps modem from the slot of the enclosure by rotating the card ejectors holding the modem in place. Carefully guide the modem out from the enclosure as shown in Figure 1.

g. Place the old 14.4 kbps modem on the grounded conductive mat.

h. Remove the new 33.6 kbps modem card from its conductive package.

i. Install the new 33.6 kbps modem by sliding the card into the enclosure while the ejectors are in the disengaged position, as shown in Figure 1. When the card makes contact with the ejectors swing the ejectors inward towards the card and press firmly to ensure proper seating of the card.

j. Place the 14.4 kbps modem in the conductive package for shipment to the OSF.

k. Perform the following RPG modem setup procedures for options 3.

NOTE

The following procedures will set option 3 for 14.4 kbps and option 4 for 33.6 kbps communications. Both options need to be set!

Ensure the system is in normal operating mode. At the front panel buttons (shown as they appear when facing the rack [i.e., rotated 90 degrees from the standalone version]), perform the following functions:

Return key - when pressed within a branch of the menu, changes the Liquid Crystal Display (LCD) to the branch title screen (e.g., `TERMINAL OPT'S`). When pressed at a branch title screen, changes the LCD to the home screen (e.g., `DATA 9600 T/D?`).

Down key - moves from branch to branch from the main menu and selects individual setting options within the branches.

Across key - moves the screen along the branches of the modem menu tree. It will also move the cursor across data entry menus one character (or digit) at a time (e.g., `S- Reg menus`).

Enter key - selects the item displayed on the LCD as the current setting (if the screen displayed an = sign, it was already the current setting) or initiates an action (as in `Reinit Memory?`).

ATTACHMENT 1 (Continued)

INSTALLATION PROCEDURES FOR THE 33.6 KBPS DATA CIRCUIT

(1) Press the key twice (ensures beginning from the home screen).

(2) Press the key until the display reads `Reinit Memory?`.

(3) Press the key once, the display reads `Reinit All Mem?`.

(4) Press the key again, the display reads `3263 Fast Init`.

(5) Press the key, the display reads `Disconnect T/D?`.

(6) Press the key until the display reads `Select Options=1`.

(7) Press the key until the display reads `Select Options:3`.

(8) Press the key, the display reads `Select Complete!`.

(9) Press the key twice to ensure starting from the home screen.

(10) Press the key until the display reads `MODULATION OPT'S`.

(11) Press the key, the display reads `Line=dial`.

(12) Press the key until the display reads `Line:4W Lease`.

(13) Press the key, the display reads `Line=4W Lease`.

(14) Press the key until the display reads `Mod=V.34 Auto`.

(15) Press the key until the display reads `Mod:V32bis Auto`.

(16) Press the key, the display reads `Mod=V32bis Auto`.

(17) Press the key until the display reads `Min Rate=300`.

ATTACHMENT 1 (Continued)

INSTALLATION PROCEDURES FOR THE 33.6 KBPS DATA CIRCUIT

(18) Press the key until the display reads `Min Rate:4800`.

(19) Press the key, the display reads `Min Rate=4800`.

(20) Press the key until the display reads `Fast Call=Lv 13`.

(21) Press the key until the display reads `Fast Call:Off`.

(22) Press the key, the display reads `Fast Call=Off`.

(23) Press the key until the display reads `Mode=Originate`.

(24) Press the key until the display reads `Mode:Answer`.

(25) Press the key, the display reads `Mode=Answer`.

(26) Press the key until the display reads `Clock=Internal`.

(27) Press the key until the display reads `Clock:Loopback`.

(28) Press the key, the display reads `Clock=Loopback`.

(29) Press the key until the display reads `PSTN=On`.

(30) Press the key, the display reads `PSTN:Off`.

(31) Press the key, the display reads `PSTN=Off`.

(32) Press the key, the display reads `MODULATION OPT'S`.

(33) Press the key until the display reads `EC/DC OPT’S`.

(34) Press the key until the display reads `Mode=Auto Rel`.

ATTACHMENT 1 (Continued)

INSTALLATION PROCEDURES FOR THE 33.6 KBPS DATA CIRCUIT

(35) Press the key until the display reads `Mode:Direct`.

(36) Press the key, the display reads `Mode=Direct`.

(37) Press the key until the display reads `Delay=Buf Or S38`.

(38) Press the key until the display reads `Delay:Off`.

(39) Press the key, the display reads `Delay=Off`.

(40) Press the key, the display reads `EC/DC OPT'S`.

(41) Press the key until the display reads `ACU OPT'S`.

(42) Press the key until the display reads `ACU Select=None`.

(43) Press the key until the display reads `ACU Select:V25b`.

(44) Press the key, the display reads `ACU Select=V25b`.

(45) Press the key until the display reads `Default Dial=1`.

(46) Press the key until the display reads `Default Dial:Off`.

(47) Press the key, the display reads `Default Dial=Off`.

(48) Press the key until the display reads `Answer=Ring #1`.

(49) Press the key until the display reads `Answer:Manual`.

(50) Press the key, the display reads `Answer=Manual`.

(51) Press the key, the display reads `ACU OPT'S`.

ATTACHMENT 1 (Continued)

INSTALLATION PROCEDURES FOR THE 33.6 KBPS DATA CIRCUIT

(52) Press the key until the display reads `TERMINAL OPT'S`.

(53) Press the key until the display reads `DTE Rate=56.0`.

(54) Press the key until the display reads `DTE Rate:14.4`.

(55) Press the key, the display reads `DTE Rate=14.4`.

(56) Press the key until the display reads `Flow=TxClk`.

(57) Press the key until the display reads `Flow:RTS/CTS`.

(58) Press the key, the display reads `Flow=RTS/CTS`.

(59) Press the key until the display reads `DCD=Normal`.

(60) Press the key until the display reads `DCD:High`.

(61) Press the key, the display reads `DCD=High`.

(62) Press the key, the display reads `TERMINAL OPT'S`.

(63) Press the key, the display reads `TELCO OPT'S`.

(64) Press the key until the display reads `LL Tx Level=0`.

ATTACHMENT 1 (Continued)

INSTALLATION PROCEDURES FOR THE 33.6 KBPS DATA CIRCUIT

NOTE

This item should be set to 0 dBm when the modem being set is connected to a leased line provided by the local telephone company unless it is a zero-loss circuit (utilized by some FAA installations). For zero-loss circuits, direct wire applications, and any dedicated modems without circuits connected to them, the transmit level should be set initially to -15 dBm. Use the key and the key to work toward 0 dBm to obtain a level that yields a received power level of -16 dBm ± 1 dBm into 600Ω load at the remote modem. This power level may be checked with the AM-48 test set. If the test set is not available, utilize the following (less accurate) procedure (EHB 6-520, paragraph 6-6.4.3, steps 49 through 55) performed on the remote modem by personnel at the remote site:

(65) Press the key twice (ensures beginning from the home screen).

(66) Press the key until the display reads `Save Changes=3`.

(67) Press the key, and wait until the display reads `Save Completed!`.

(68) Press the key twice to return to the home screen.

l. Perform the following modem settings for option 4.

(1) Press the key twice (ensures beginning from the home screen).

(2) Press the key until the display reads `Select Options=3`.

(3) Press the key until the display reads `Select Options:4`.

(4) Press the key, the display reads `Select Complete!`.

(5) Press the key, the display reads `LineProbing T/D?`.

(6) Press the key until the display reads `MODULATION OPT'S`.

ATTACHMENT 1 (Continued)

INSTALLATION PROCEDURES FOR THE 33.6 KBPS DATA CIRCUIT

(7) Press the key, the display reads `Line=2WLease`.

(8) Press the key until the display reads `Line:4W Lease`.

(9) Press the key, the display reads `Line=4W Lease`.

(10) Press the key until the display reads `PSTN=On`.

(11) Press the key, the display reads `PSTN:Off`.

(12) Press the key, the display reads `PSTN=Off`.

(13) Press the key, the display reads `MODULATION OPT'S`.

(14) Press the key until the display reads `RESTORAL OPT’S`.

(15) Press the key until the display reads `Rest=FP/Auto`.

(16) Press the key until the display reads `Rest:Off`.

(17) Press the key, the display reads `Rest=Off`.

(18) Press the key, the display reads `RESTORAL OPT’S`.

(19) Press the key until the display reads `TERMINAL OPT'S`.

(20) Press the key until the display reads `DTR=High`.

(21) Press the key until the display reads `DTR:108.1`.

(22) Press the key, the display reads `DTR=108.1`.

(23) Press the key until the display reads `DCD=Normal`.

ATTACHMENT 1 (Continued)

INSTALLATION PROCEDURES FOR THE 33.6 KBPS DATA CIRCUIT

(24) Press the key until the display reads `DCD:High`.

(25) Press the key, the display reads `DCD=High`.

(26) Press the key, the display reads `TERMINAL OPT'S`.

(27) Press the key, the display reads `TELCO OPT'S`.

(28) Press the key until the display reads `LL Tx Level=__`.

NOTE

This item should be set to 0 dBm when the modem being set is connected to a leased line provided by the local telephone company unless it is a zero-loss circuit (utilized by some FAA installations). For zero-loss circuits, direct wire applications, and any dedicated modems without circuits connected to them, the transmit level should be set initially to -15 dBm. Use the key and the key to work toward 0 dBm to obtain a level that yields a received power level of -16 dBm ± 1 dBm into 600Ω load at the remote modem. This power level may be checked with the AM-48 test set. If the test set is not available, utilize the following (less accurate) procedure (EHB 6-520, paragraph 6-6.4.3, steps 49 through 55) performed on the remote modem by personnel at the remote site:

(29) Press the key twice (ensures beginning from the home screen).

(30) Press the key until the display reads `Save Changes=4`.

(31) Press the key, and wait until the display reads `Save Completed!`.

(32) Press the key twice to return to the home screen.

ATTACHMENT 1 (Continued)

INSTALLATION PROCEDURES FOR THE 33.6 KBPS DATA CIRCUIT

4. Perform the following RPG setup procedures at the UCP:

   a. On the active RPG channel, enter **AD,***password1***,NB,***password2***,RE<Return>** to display the `RECONFIGURATION CONTROL` menu.

   b. On the active RPG channel, enter **M,***xx***<Return><Tab>Y<Tab>RPGOP<Tab>336ØØ<Tab>RGOP<Return>** (where xx is the line row number for the modem being replaced) to modify line xx to be the RPGOP with a baud rate of 33.6 kbps and satellite option selected.

   c. On the active RPG channel, enter **U,Y<Return>** to indicate the adaptation update should take effect.

   d. On the active RPG channel, enter **E<Return>** to save the adaptation data changes. A message will be displayed after 2 minutes on the feedback line `REMINDER - UPDATE REDUNDANT ADAPT DATA`.

   e. Enter **<F1>** to return to the Main menu.

   f. On the active RPG channel, enter **RE,F<Return>** and verify the message `COMMAND EXECUTED - RE,F` is displayed. This command will force the adaptation data changes to the inactive channel.

   g. On the inactive RPG channel, enter **ST,S<Return>** to display the System Status menu. Verify the status message `ADAPTATION UPDATE RECEIVED` is displayed. This step could take up to 2 minutes.

   h. On the active RPG channel, enter **ST,S<Return>** to display the System Status menu. Verify the status message `OTHER RPG ADAPTATION UPDATE COMPLETED` is displayed. This step could take up to 7 minutes.

   i. Enter **<F1>** to return to the Main menu.

NOTE

DO NOT shutdown the active RPG at this time.

   j. On the inactive RPG channel, enter **U,SH,O<Return>** to shutdown the inactive RPG for the narrowband configurations to take effect.

5. Perform the following PUP shutdown procedures:

   a. At the Application Terminal, enter **S,A<Return>** to get the status of Archive IV.

   b. At the `ARCHIVE STATUS` screen, if the message `ARCHIVE NOT ACTIVE` is displayed, proceed to step 4.c. If the message `AUTO ARCHIVE... ACTIVE` is displayed, then cancel auto archiving by entering **A,C,A<Return>**.

c. At the System Console, enter **PUPDOWN<Return>**.

d. Enter **D TA<Return>** and observe the display. If `TASK(S) NOT FOUND` is displayed, proceed to step 4.f.

e. Enter **CA***taskid***<Return>** for each task found to cancel the active task(s).

f. Enter **ERR LOG,OFF<Return>** to allow disks to be marked off (required only if `ERROR LOG` function was previously activated).

g. Enter **MA DSC0:,OFF<Return>** to mark off disk 0.

h. Enter **D D<Return>** and verify `DSC0 D9 0000 OFF` is displayed.

i. Simultaneously press the **<Ctrl>** and **V** keys twice, and then press the **<Return>** key to enter the CDS mode. Verify the `CDS>` prompt is displayed.

j. Enter **KEY 1,***password***<Return>**.

k. Enter **HA<Return>** to halt the CPU.

l. Enter **PO OFF<Return>** to turn **OFF** DC power supplies.

m. Enter **STA 1,28<Return>** to verify all DC power supplies are off.

n. At the back of the data processor cabinet, turn **OFF** the Swing-Out power supply ganged switch, CB1-3.

o. At the back of the data processor cabinet, turn **OFF** the AC Power Distribution Panel, 41A20, main AC switch, CB1.

p. If applicable, set the Power Supply 41PS3 power switch to **OFF**.

q. At the workbench, perform the following steps on the PUP modems:

(1) Remove the 33.6 kbps modems from their conductive packages, and place the modems on the ESD mat. Save the modem boxes for shipment of the 14.4 kbps modems back to OSF.

(2) Check/set the DIP switches on both new modems as shown in Figure 2. Switches 1 and 2 are **ON**; all others are **OFF**.

6. Perform the following PUP modem installation procedures:

a. Remove the old 14.4 kbps modem from the number one (1) slot of the enclosure by rotating the card ejectors holding the modem in place. Carefully guide the modem out from the enclosure as shown in Figure 1.

ATTACHMENT 1 (Continued)

INSTALLATION PROCEDURES FOR THE 33.6 KBPS DATA CIRCUIT

b. Place the old 14.4 kbps modem on the grounded conductive mat.

c. Remove the new 33.6 kbps modem card from its conductive package.

d. Install the new 33.6 kbps modem by sliding the card into the enclosure while the ejectors are in the disengaged position as shown in Figure 1. When the card makes contact with the ejectors, swing the ejectors inward toward the card and press firmly to ensure proper seating of the card.

e. Place the old 14.4 kbps modem in the conductive package for shipment to the OSF.

7. Perform the following PUP modem setup procedures:

Ensure the system is in normal operating mode. At the front panel buttons (shown as they appear when facing the rack [i.e., rotated 90 degrees from the standalone version]), perform the following functions:

a. Perform the following PUP modem setup procedures for option 3.

NOTE

The following procedures will set option 3 for 14.4 kbps and option 4 for 33.6 kbps communications.

Ensure the system is in normal operating mode. At the front panel buttons (shown as they appear when facing the rack [i.e., rotated 90 degrees from the standalone version]), perform the following functions:

Return key - when pressed within a branch of the menu, changes the Liquid Crystal Display (LCD) to the branch title screen (e.g., `TERMINAL OPT'S`). When pressed at a branch title screen, changes the LCD to the home screen (e.g., `DATA 9600 T/D?`).

Down key - moves from branch to branch from the main menu and selects individual setting options within the branches.

Across key - moves the screen along the branches of the modem menu tree. It will also move the cursor across data entry menus one character (or digit) at a time (e.g., `S- Reg menus`).

Enter key - selects the item displayed on the LCD as the current setting (if the screen displayed an = sign, it was already the current setting) or initiates an action (as in `Reinit Memory?`).

(1) Press the key twice (ensures beginning from the home screen).

ATTACHMENT 1 (Continued)

INSTALLATION PROCEDURES FOR THE 33.6 KBPS DATA CIRCUIT

(2) Press the ▼ key until the display reads `Reinit Memory?`.

(3) Press the ◎ key once, the display reads `Reinit All Mem?`.

(4) Press the ◎ key again, the display reads `3263 Fast Init`.

(5) Press the ◥ key, the display reads `Disconnect T/D?`.

(6) Press the ▼ key until the display reads `Select Options=1`.

(7) Press the ◀ key until the display reads `Select Options:3`.

(8) Press the ◎ key, the display reads `Select Complete!`.

(9) Press the ◥ key, the display reads `LineProbing T/D?`.

(10) Press the ◀ key until the display reads `MODULATION OPT'S`.

(11) Press the ▼ key, the display reads `Line=Dial`.

(12) Press the ◀ key until the display reads `Line:4W Lease`.

(13) Press the ◎ key, the display reads `Line=4W Lease`.

(14) Press the ▼ key until the display reads `Mod=V.34 Auto`.

(15) Press the ◀ key until the display reads `Mod:V32bis Auto`.

(16) Press the ◎ key, the display reads `Mod=V32bis Auto`.

(17) Press the ▼ key until the display reads `Min Rate=300`.

(18) Press the ◀ key until the display reads `Min Rate:4800`.

ATTACHMENT 1 (Continued)

INSTALLATION PROCEDURES FOR THE 33.6 KBPS DATA CIRCUIT

(19) Press the key, the display reads `Min Rate=4800`.

(20) Press the key until the display reads `Fast Call=Lv13`.

(21) Press the key until the display reads `Fast Call:Off`.

(22) Press the key, the display reads `Fast Call=Off`.

(23) Press the key until the display reads `PSTN=On`.

(24) Press the key, the display reads `PSTN:Off`.

(25) Press the key, the display reads `PSTN=Off`.

(26) Press the key, the display reads `MODULATION OPT'S`.

(27) Press the key until the display reads `EC/DC OPT’S`.

(28) Press the key until the display reads `Mode=Auto Rel`.

(29) Press the key until the display reads `Mode:Direct`.

(30) Press the key, the display reads `Mode=Direct`.

(31) Press the key until the display reads `Delay=Buf Or S38`.

(32) Press the key until the display reads `Delay:Off`.

(33) Press the key, the display reads `Delay=Off`.

(34) Press the key, the display reads `EC/DC OPT’S`.

(35) Press the key until the display reads `ACU OPT’S`.

ATTACHMENT 1 (Continued)

INSTALLATION PROCEDURES FOR THE 33.6 KBPS DATA CIRCUIT

(36) Press the ▼ key until the display reads `ACU Select=None`.

(37) Press the ◀ key until the display reads `ACU Select:V25b`.

(38) Press the ◎ key, the display reads `ACU Select=V25b`.

(39) Press the ▼ key until the display reads `Default Dial=1`.

(40) Press the ◀ key until the display reads `Default Dial:Off`.

(41) Press the ◎ key, the display reads `Default Dial=Off`.

(42) Press the ▼ key until the display reads `Answer=Ring #1`.

(43) Press the ◀ key until the display reads `Answer:Manual`.

(44) Press the ◎ key, the display reads `Answer=Manual`.

(45) Press the key, the display reads `ACU OPT’S`.

(46) Press the ◀ key until the display reads `TERMINAL OPT'S`.

(47) Press the ▼ key until the display reads `DTE Rate=56.0`.

(48) Press the ◀ key until the display reads `DTE Rate:14.4`.

(49) Press the ◎ key, the display reads `DTE Rate=14.4`.

(50) Press the ▼ key until the display reads `Flow=TxClk`.

(51) Press the ◀ key until the display reads `Flow:RTS/CTS`.

(52) Press the ◎ key, the display reads `Flow=RTS/CTS`.

ATTACHMENT 1 (Continued)

INSTALLATION PROCEDURES FOR THE 33.6 KBPS DATA CIRCUIT

(53) Press the key until the display reads `DCD=Normal`.

(54) Press the key until the display reads `DCD:High`.

(55) Press the key, the display reads `DCD=High`.

(56) Press the key, the display reads `TERMINAL OPT'S`.

(57) Press the key, the display reads `TELCO OPT'S`.

(58) Press the key until the display reads `LL Tx Level=0`.

NOTE

This item should be set to 0 dBm when the modem being set is connected to a leased line provided by the local telephone company unless it is a zero-loss circuit (utilized by some FAA installations). For zero-loss circuits, direct wire applications, and any dedicated modems without circuits connected to them, the transmit level should be set initially to -15 dBm. Use the key and the key to work toward 0 dBm to obtain a level that yields a received power level of -16 dBm ± 1 dBm into 600Ω load at the remote modem. This power level may be checked with the AM-48 test set. If the test set is not available, utilize the following (less accurate) procedure (EHB 6-530, paragraph 6-6.3, steps 43 through 46) performed on the remote modem by personnel at the remote site:

(59) Press the key twice (ensures beginning from the home screen).

(60) Press the key until the display reads `Save Changes=3`.

(61) Press the key and wait until the display reads `Save Completed!`.

(62) Press the key twice to return to the home screen.

b. Perform the following modem settings for option 4.

ATTACHMENT 1 (Continued)

INSTALLATION PROCEDURES FOR THE 33.6 KBPS DATA CIRCUIT

(1) Press the key twice (ensures beginning from the home screen).

(2) Press the key until the display reads `Select Options=3`.

(3) Press the key until the display reads `Select Options:4`.

(4) Press the key, the display reads `Select Complete!`.

(5) Press the key, the display reads `LineProbing T/D?`.

(6) Press the key until the display reads `MODULATION OPT'S`.

(7) Press the key, the display reads `Line=2WLease`.

(8) Press the key until the display reads `Line:4W Lease`.

(9) Press the key, the display reads `Line=4W Lease`.

(10) Press the key until the display reads `Mode=Answer`.

(11) Press the key, the display reads `Mode:Originate`.

(12) Press the key, the display reads `Mode=Originate`.

(13) Press the key until the display reads `PSTN=On`.

(14) Press the key, the display reads `PSTN:Off`.

(15) Press the key, the display reads `PSTN=Off`.

(16) Press the key, the display reads `MODULATION OPT'S`.

(17) Press the key until the display reads `RESTORAL OPT’S`.

ATTACHMENT 1 (Continued)

INSTALLATION PROCEDURES FOR THE 33.6 KBPS DATA CIRCUIT

(18) Press the ▼ key until the display reads `Rest=FP/Auto`.

(19) Press the ◀ key until the display reads `Rest:Off`.

(20) Press the ◎ key, the display reads `Rest=Off`.

(21) Press the ↘ key, the display reads `RESTORAL OPT’S`.

(22) Press the ◀ key until the display reads `TERMINAL OPT'S`.

(23) Press the ▼ key until the display reads `DTR=High`.

(24) Press the ◀ key until the display reads `DTR:108.1`.

(25) Press the ◎ key, the display reads `DTR=108.1`.

(26) Press the ▼ key until the display reads `DCD=Normal`.

(27) Press the ◀ key until the display reads `DCD:High`.

(28) Press the ◎ key, the display reads `DCD=High`.

(29) Press the ↘ key, the display reads `TERMINAL OPT'S`.

(30) Press the ◀ key, the display reads `TELCO OPT'S`.

(31) Press the ▼ key until the display reads `LL Tx Level=__`.

ATTACHMENT 1 (Continued)

INSTALLATION PROCEDURES FOR THE 33.6 KBPS DATA CIRCUIT

NOTE

This item should be set to 0 dBm when the modem being set is connected to a leased line provided by the local telephone company unless it is a zero-loss circuit (utilized by some FAA installations). For zero-loss circuits, direct wire applications, and any dedicated modems without circuits connected to them, the transmit level should be set initially to -15 dBm. Use the key and the key to work toward 0 dBm to obtain a level that yields a received power level of -16 dBm ± 1 dBm into 600Ω load at the remote modem. This power level may be checked with the AM-48 test set. If the test set is not available, utilize the following (less accurate) procedure (EHB 6-530, paragraph 6-6.3, steps 43 through 46) performed on the remote modem by personnel at the remote site:

(32) Press the key twice (ensures beginning from the home screen).

(33) Press the key until the display reads `Save Changes=4`.

(34) Press the key and wait until the display reads `Save Completed!`.

(35) Press the key twice to return to the home screen.

c. Place the old 14.4 kbps modems into the boxes the 33.6 kbps modems were shipped in.

d. Using the Federal Express labels, provided in the kit, return the old 14.4 kbps modems to the OSF.

8. Perform the following A/B switch installation procedures:

a. Using the labels provided in the kit, attach the label `PUP` over the letter **A** on the front of the A/B switch. It may be necessary to trim the label for a proper fit.

b. Using the labels provided in the kit, attach the label `AWIPS` over the letter **B** on the front of the A/B switch. It may be necessary to trim the label for a proper fit.

c. Position the A/B switch on the top front center of 41A2 (Codex Modem Rack). The switch should fit below the 41A1 card rack holding the modem eliminator and protocol converter cards (Collocated PUPs only). Ensure the switch is set to the **A (PUP)** position.

d. Remove RJ45 cable (41W74) from between the modem nest backplane (41A2A1 port B1) and the adaptor panel (41A6 port J1). Discard cable.

ATTACHMENT 1 (Continued)

INSTALLATION PROCEDURES FOR THE 33.6 KBPS DATA CIRCUIT

e. Connect RJ45 cable, NSN NWS9-82-450-0004, between the modem nest backplane (41A2A1 port B1) and port A of the A/B switch.

f. Connect RJ45 cable, NSN NWS9-82-450-0004, between the port labeled C or input/ output of the A/B switch and the adaptor panel (41A6J1).

g. Connect RJ45 cable, NSN NWS9-82-450-0004, between port B of the A/B switch and the adaptor panel (41A6J12).

h. Tie wrap all loose wires for a clean installation.

i. In the telephone room, locate the punchdown blocks for the 33.6 kbps dedicated feeds of the PUP or AWIPS. If unable to locate, reference Modification Note 43.

j. Record the AWIPS to RPG Dedicated Punchdown block pin numbers. At this point you will lose the AWIPS dedicated feed. Operations should be notified.

AWIPS_____RPG_____

k. Remove the existing RPG to AWIPS Punchdown block jumper wires.

l. Connect the PUP to the AWIPS cross-connect as shown in Figure 3.

m. This completes the installation of the A/B switch.

n. Ensure all connections are solid.

9. Perform the following power up procedures:

a. If applicable, set power supply 41PS3 power switch to the **ON** position.

b. At the back of the data processor cabinet, turn **ON** the AC power distribution panel, 41A40, main AC switch, CB1.

c. At the back of the data processor cabinet, turn **ON** the swing-out power supply ganged switch, CB1-3. Close and secure the swing-out power supply.

d. At the System Console, enter **KEY 1,***password***<Return>**.

e. At the System Console, enter **PO ON<Return>**.

10. Perform the following RPG Startup procedures:

a. At the UCP on the inactive RPG channel, enter **RPGUP<Return>** to bring up the inactive channel.

ATTACHMENT 1 (Continued)

INSTALLATION PROCEDURES FOR THE 33.6 KBPS DATA CIRCUIT

b. On inactive RPG channel, enter **AD,***password1***,NB,***password2***,VI<Return>** and verify Narrowband communication 33.6 kbps line is configured.

c. On inactive RPG channel, press **<F1>** to return to RPG Main menu.

d. On inactive RPG channel, enter **RE,C,***password***<Return>** to make the inactive channel the controlling channel.

11. Perform the following PUP setup procedures:

a. At the PUP ApplicationsTerminal, enter **C,C,D,***narrowband line#***<Return>** to disconnect the new 33.6 kbps line.

b. At the PUP Applications Terminal, enter **AD,***password1***,***password2***,5,0<Return>** for the `CATEGORY 5 PUP/RPG-OP Flag` menu.

c. Enter **0001<Return>** to set the RPGOP flag.

d. Press function key **<F1>** to save the RPGOP flag setting and display the PUP Main menu.

e. At the System Console, enter **PUPDOWN<Return>**.

f. At the System Console, enter **PUPUP<Return>** to implement the narrowband changes.

g. Perform the following steps to increase the product set up to 50.

(1) Enter **AD<Return>** to display the Adaptation Data menu.

(2) Enter **R,***x***,E<Return>** to display RPS List (x).

(3) Press function key **<F7>** to page through the RPG list to find the last product.

(4) Have an operator include any other product lists they wish up to 50 products.

(5) Press function key **<F1>** to save the Adaptation Routine Product Set Edits and to display the PUP Main menu.

(6) Enter **AD,***password***,N<Return>** to display the PUP Narrowband menu.

(7) **NOT APPLICABLE IN THE ALASKAN REGION:** Enter **M,***x***<Return>**, where x is the line number of the modem to be modified.

(8) Press the **<Tab>** key to position the cursor in the COMMS OPS block and then enter **Y<Return>**.

ATTACHMENT 1 (Continued)

INSTALLATION PROCEDURES FOR THE 33.6 KBPS DATA CIRCUIT

(9) Press the **<F1>** key to save the changes and return to the Main menu.

(10) At the System Console, enter **PUPDOWN<Return>**.

(11) At the System Console, enter **PUPUP<Return>** to implement the narrowband changes.

(12) At the PUP Applications Terminal, reconnect the new 33.6 kbps line by entering **U,C,C,***narrowband line#***<Return>**, and verify the line is connected.

NOTE

Multiple radars connected to a single AWIPS Simpact card must be set to transmit and receive the same data package size (i.e., 128 or 512). Mixing the data package size causes the modems to repeatedly connect and disconnect. Therefore, all connections with the AWIPS Simpact card should be set with the data package size of 512 bytes. In order for the AWIPS Simpact and the new 33.6 SDC modems to communicate at the high-speed data rate, it is necessary to utilize a 512 package size. To obtain a 512 package size, configure the new 33.6 SDC modem using the Reconfiguration Control Screen COMMS OPTION field to enable the satellite comms option.

h. Perform the following steps for each PUP associated to the same AWIPS Simpact. **NOT APPLICABLE TO SITES HAVING PREVIOUSLY SET SATELLITE COMMS**.

(1) Press function key **<F1>** to display the PUP Main menu.

(2) Enter **AD,***password***,N<Return>** to display the PUP Narrowband menu.

(3) Enter **M,***x***<Return>** where x is the line number of the modem to be modified.

(4) Press the **<Tab>** key to position the cursor in the COMMS OPS block and then enter **Y<Return>**.

(5) Press the **<F1>** key to save the changes and return to the Main menu.

(6) At the System Console, enter **PUPDOWN<Return>**.

(7) At the System Console, enter **PUPUP<Return>** to implement the narrowband changes.

12. Perform the following RPG setup procedures at the UCP for each RPG associated with the same AWIPS Simpact. **NOT APPLICABLE TO SITES HAVING PREVIOUSLY SET SATELLITE COMMS**:

ATTACHMENT 1 (Continued)

INSTALLATION PROCEDURES FOR THE 33.6 KBPS DATA CIRCUIT

a. On the active RPG channel, enter **AD,***password1***,NB,***password2***,RE<Return>** to display the `RECONFIGURATION CONTROL` menu.

b. On the active RPG channel, enter **M,***xx***<Return><Tab>Y<Return>** (where xx is the line row number for the modem being replaced) to modify line xx to be the PUP with satellite option selected.

c. On the active RPG channel, enter **U,Y<Return>** to indicate the adaptation update should take effect.

d. On the active RPG channel, enter **E<Return>** to save the adaptation data changes. A message will be displayed after 2 minutes on the feedback line `REMINDER - UPDATE REDUNDANT ADAPT DATA`.

e. Enter **<F1>** to return to the Main menu.

f. On the active RPG channel, enter **RE,F<Return>** and verify the message `COMMAND EXECUTED - RE,F` is displayed. This command will force the adaptation data changes to the inactive channel.

g. On the inactive RPG channel, enter **ST,S<Return>** to display the System Status menu. Verify the status message `ADAPTATION UPDATE RECEIVED` is displayed. This step could take up to 2 minutes.

h. On the active RPG channel, enter **ST,S<Return>** to display the System Status menu. Verify the status message `OTHER RPG ADAPTATION UPDATE COMPLETED` is displayed. This step could take up to 7 minutes.

i. Enter **<F1>** to return to the Main menu.

j. On inactive RPG channel, enter **U,SH,O<Return>** to shutdown the inactive RPG for the narrowband configurations to take effect.

k. On the inactive RPG channel, enter **RPGUP<Return>**.

l. On the inactive RPG channel, enter **AD,***password1***,NB,***password2***,VI<Return>** and verify Narrowband communication is configured for satellite option.

m. On the inactive RPG channel, press **<F1>** to return to RPG Main menu.

n. On the inactive RPG channel, enter **RE,C,***password***<Return>** to make the inactive channel the controlling channel.

o. On the inactive RPG channel, enter **U,SH,O<Return>** to shutdown the inactive RPG for the narrowband configurations to take effect.

ATTACHMENT 1 (Continued)

INSTALLATION PROCEDURES FOR THE 33.6 KBPS DATA CIRCUIT

p. On the inactive RPG channel, enter **RPGUP<Return>**.

13. In the AWIPS cabinet, verify the AWIPS modem installation is complete.

a. Ensure the system is in normal operating mode. At the front panel buttons (shown as they appear when facing the rack [i.e., rotated 90 degrees from the standalone version]), perform the following functions:

Return key - when pressed within a branch of the menu, changes the Liquid Crystal Display (LCD) to the branch title screen (e.g., `TERMINAL OPT'S`). When pressed at a branch title screen, changes the LCD to the home screen (e.g., `DATA 9600 T/D?`).

Down key - moves from branch to branch from the main menu and selects individual setting options within the branches.

Across key - moves the screen along the branches of the modem menu tree. It also will move the cursor across data entry menus one character (or digit) at a time (e.g., `S-Reg menus`).

Enter key - selects the item displayed on the LCD as the current setting (if the screen displayed an = sign, it was already the current setting), or initiates an action (as in `Reinit Memory?`).

(1) Press the key twice (ensures beginning from the home screen).

(2) Press the key until the display reads `Select Options=3`.

(3) Press the key until the display reads `Select Options:4`.

(4) Press the key, the display reads `Select Complete!`.

(5) Press the key until the display reads `Power Up In=Old`. or `Power Up In=3`

(6) Press the key until the display reads `Power Up In:4`.

ATTACHMENT 1 (Continued)

INSTALLATION PROCEDURES FOR THE 33.6 KBPS DATA CIRCUIT

(7) Press the key, the display reads `Power Up In=4`.

(8) Press the key, the display reads `Disconnect T/D?`.

(9) Press the key until the display reads `Save Changes=4`.

(10) Press the key and wait until the display reads `Save Completed!`.

(11) Press the key twice to return to the home screen.

b. This completes the AWIPS modem setup.

14. Perform the following steps to force the Narrowband Configuration changes to take affect on the inactive channel:

a. On inactive RPG channel, enter **U,SH,O<Return>** to shutdown the RPG for the narrowband configurations to take effect.

b. At the UCP on inactive RPG channel, enter **RPGUP<Return>** to bring up the active channel.

c. On inactive RPG channel, enter **AD,***password1***,NB,***password2***,VI<Return>** and verify the narrowband communication 33.6 kbps line is connected.

d. On inactive RPG channel, enter **<F1>** to return to RPG Main menu.

e. On inactive RPG channel, enter **RE,C,***password***<Return>** to make the inactive channel the controlling channel.

f. While keeping the current active channel active, repeat steps 3. through 3.l.(32) to install and program the modem on the inactive channel (same slot as other channel).

15. Perform the following procedure to switch the 33 kbps line from the PUP to AWIPS:

a. At the UCP Applications Terminal, disconnect the PUP dedicated line at the UCP by entering:

U,C,D,*NB Line #***<Return>**.

b. At the PUP ApplicationsTerminal, enter **C,C,D,1<Return>** to disconnect the PUP dedicated line.

c. Enter **S,C<Return>** on the PUP Applications Terminal command line to verify the line disconnect. The status of line 1 should read `DSA DSC (Disabled, Disconnected)`.

d. Move the 33.6 kbps switch, NSN 5895-01-458-6309, to the **B/AWIPS** position.

e. Connect AWIPS dedicated lines at the UCP Applications Terminal by entering the following: **U,C,C,***NB Line #***<Return>**.

f. Call Tom Jackson of PRC (703-556-3567) to download the appropriate AWIPS script files.

NOTES

If the AWIPS lines fail to connect, a disconnect/connect command must be issued by entering:

U,C,D,*NB Line(s) Referenced Above***<Return>**

followed by a

U,C,C,*NB Line(s) Referenced Above***<Return>**

If AWIPS fails to display a connect message, call the Network Control Facility (NCF) for a Simpact reset.

16. Perform the following steps to backup the RPG adaptation data files:

a. Press function key **<F1>** to display the RPG Main menu.

b. At the command line, enter **U,SH,O<Return>** to shut down the RPG application software and allow the narrowband configuration to go into effect.

c. Press the **<Shift>** and **<Port>** keys simultaneously to display the System Console. (If collocated RPG/RDA, you should have the RDA maintenance terminal in the RPG system console mode.)

d. At the * prompt, enter **RPGUP<Return>** to start the application software.

e. At the UCP Main menu, enter **ST,C<Return>** to verify the narrowband configuration changes are correct. If not, repeat steps 16.a. through 16.d.

f. Press function key **<F1>** to return to the Main menu.

g. At the SCSI tape unit, insert a blank cartridge tape in the SCSI tape drive and slide the lever to the locked position. Ensure the tape is secured in the SCSI tape drive.

h. At the command line, enter **U,SH,O<Return>** to shut down the RPG application software.

ATTACHMENT 1 (Continued)

INSTALLATION PROCEDURES FOR THE 33.6 KBPS DATA CIRCUIT

i. Press the **<Shift>** and **<Port>** keys simultaneously to display the System Console. (If collocated RPG/RDA, you should have the RDA maintenance terminal in the RPG system console mode.)

NOTE

Ensure this software change is saved to the RPG backup SCSI tape as soon as possible. Backup procedures can be found in "Tales from the Hotline" topic 1-30 (Hotline web page Tales from the Hotline topic #5509 - 5506 - http://www.osf.noaa.gov/ops/5506.htm). Instructions for using BACKFILE were provided with the build 10 training material.

j. At the * prompt, enter **BACKFILE<Return>**. This loads data files to the SCSI tape. When the transfer is complete, `END OF TASK 0` is displayed. This step may take up to 10 minutes.

k. Remove the cartridge from the SCSI tape unit. Label and date the backup tape with the site name and names of the files copied. Store the tape in a safe but accessible location.

l. At the * prompt, enter **RPGUP<Return>** to start the application software.

ATTACHMENT 1 (Continued)

INSTALLATION PROCEDURES FOR THE 33.6 KBPS DATA CIRCUIT

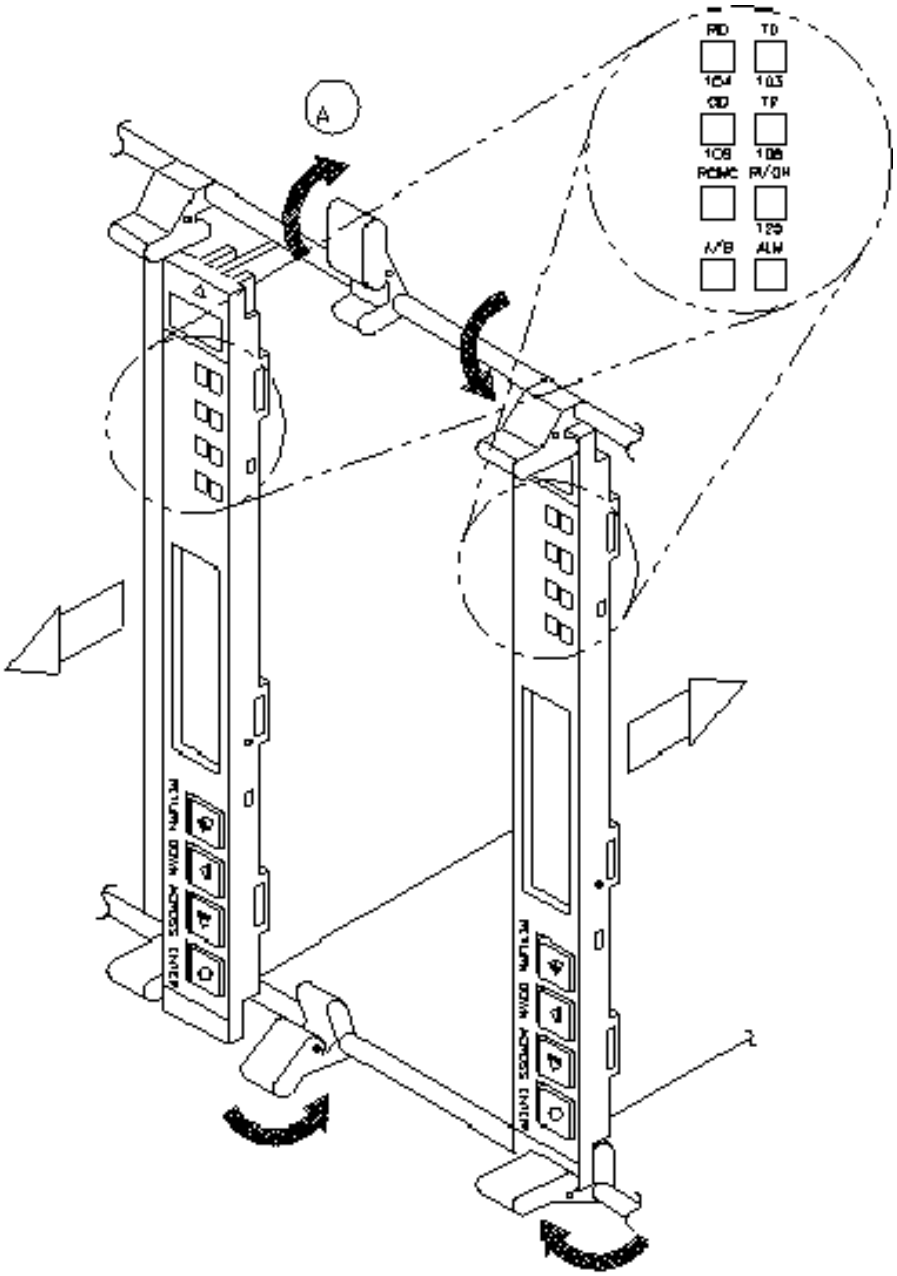

Figure 1. Modem Card Removal and Replacement

ATTACHMENT 1 (Continued)

INSTALLATION PROCEDURES FOR THE 33.6 KBPS DATA CIRCUIT

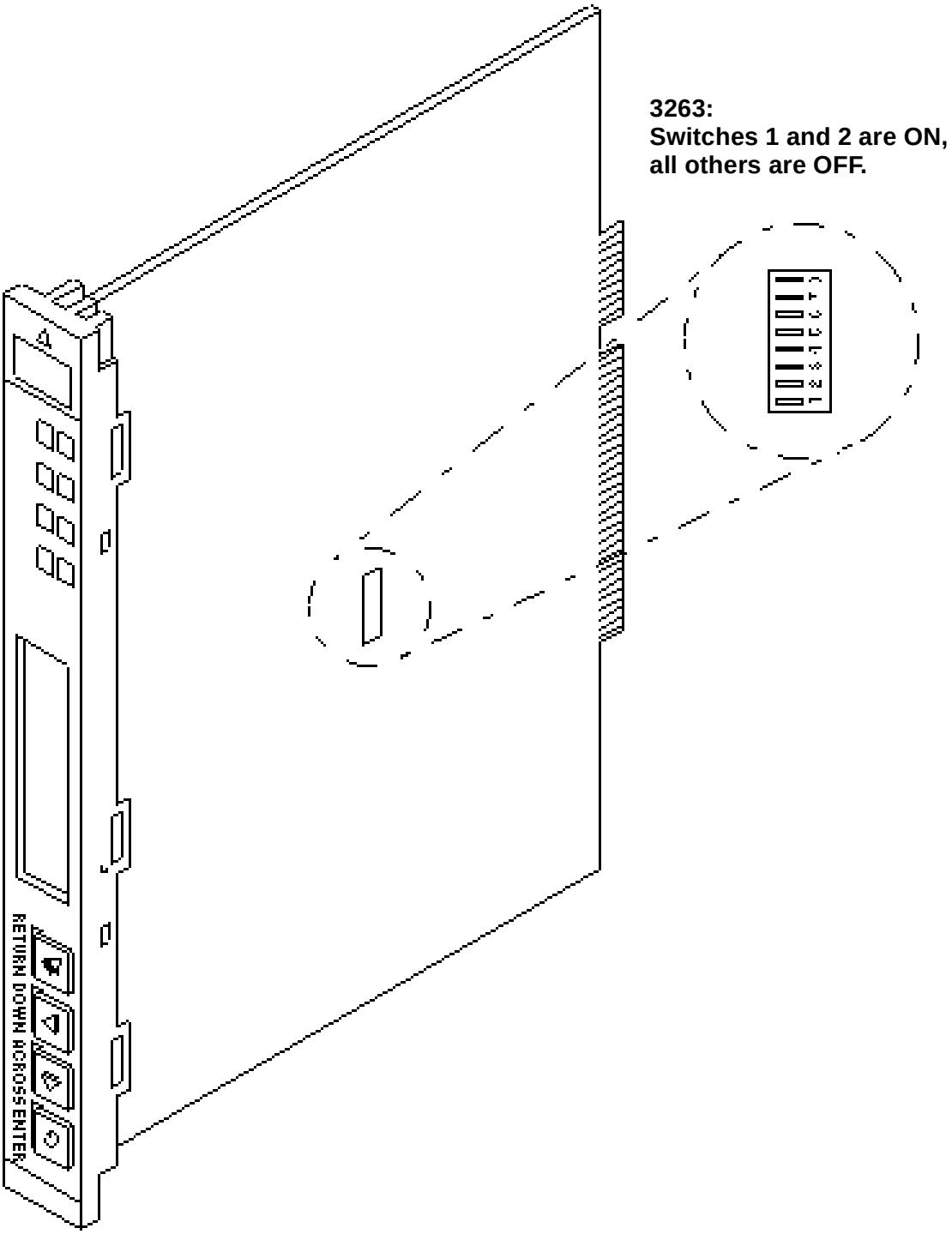

Figure 2. Modem DIP Switch Location

ATTACHMENT 1 (Continued)

INSTALLATION PROCEDURES FOR THE 33.6 KBPS DATA CIRCUIT

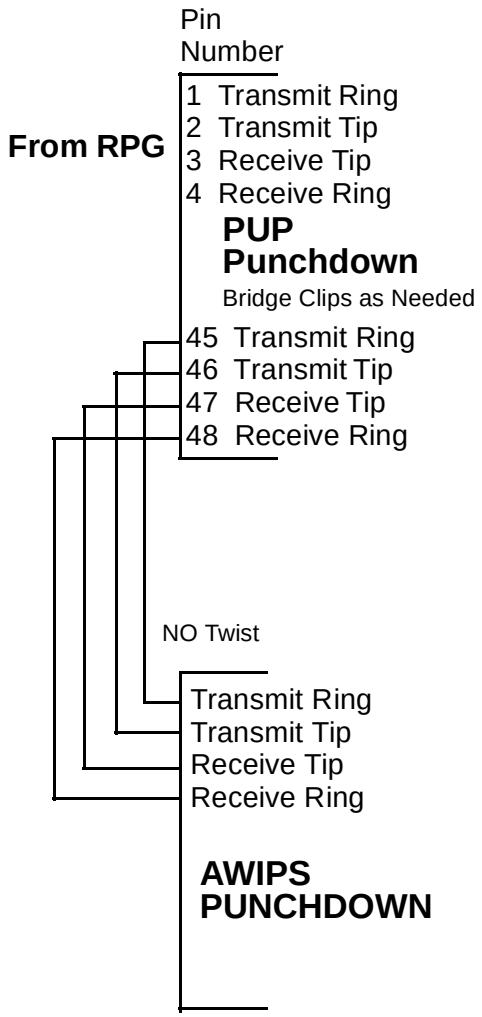

Figure 3. Punchdown Block Configuration

ATTACHMENT 1 (Continued)

INSTALLATION PROCEDURES FOR THE 33.6 KBPS DATA CIRCUIT

This page is intentionally left blank.

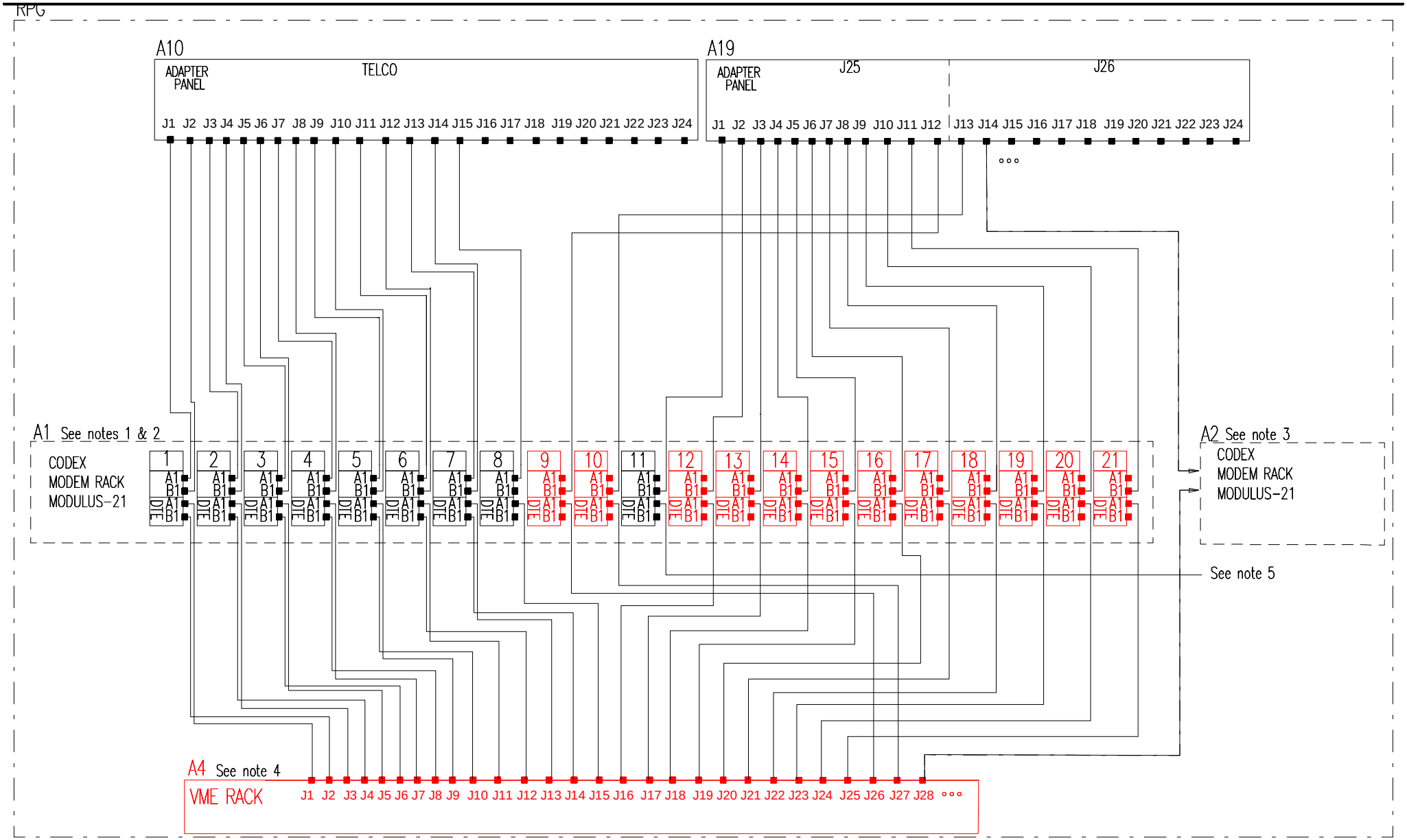

Notes:

1. Dial modems are installed starting with modem slot 1. Dial modems contain two 2-wire dial lines per slot.
2. Dedicated modems are installed starting with modem slot 12 and wrap around to slots 9 and 10. Dedicated modems contain one 4-wire dedicated line per slot.
3. Dedicated modems in a second modem rack start in slot 1.
4. The port number of the VME rack corresponds to the "DEVICE ID MNE" column of the Reconfiguration Control Screen. Dial port connections start with J1 and increase upward. Start the dedicated port connections after the last dial port. For example since there are 15 dial connections, the first dedicated connection is to J16.
5. The UCP uses modem slot 11.

ATTACHMENT 2

SITE SPECIFIC NARROWBAND CIRCUIT REPORTS

Attached is each site's Narrowband Circuit Reports. Locate the appropriate circuit reports.

ATTACHMENT 2 (Continued)

SITE SPECIFIC NARROWBAND CIRCUIT REPORTS

NEXRAD RPG NARROWBAND CIRCUIT REPORT

TYPE	CKNTO	USAGE	CONNECTIVITY	COMM CLIN	RADAR CLIN
**ANCHORAGE FAA (RPG 1)					
**1-RJ21X					
D/U	01	NWS DIAL 1		30AF	DN
D/U	02	NWS DIAL 2		30AG	DN
D/U	03	NWS DIAL 3		30AC	DN
D/U	04	NWS DIAL 4		30AC	DN
D/U	05	NWS DIAL 5		30AC	DN
D/U	06	NWS DIAL 6		30AC	DN
D/U	07	NWS DIAL 7		30AC	DN
D/U	08	AIR FORCE DIAL 1		30AC	DN
D/U	09	AIR FORCE DIAL 2		30AC	DN
D/U	10	AIR FORCE DIAL 3		30AC	DN
D/U	11	AIR FORCE DIAL 4		30AC	DN
D/U	12	CORPS OF ENGINEERS		30AC	DN
D/U	13	US NAVY DIAL 1		30AC	DN
D/U	14	FAA DIAL 1		30AC	DN
D/U	15	FAA DIAL 2		30AC	DN
**RJ11					
D/U	n/	** INTERCOM **		05TE	DN
**2-RJ2DX					
DED	01	** REMOTE UCP **	FAA ARTCC ANCHORAGE	30AB	DN
DED	02	NIDS 1	Temporarily Unassigned (WARP0)	30AH	DN
DED	03	NIDS 2	W.S.I.	30AH	DN
DED	04	NIDS 3	Kavouras	30AH	DN
DED	05	NIDS 4	Alden	30AH	DN
DED	06	FAA DED 1	ANCHORAGE ARTCC	30AA	DN
DED	07	FAA DED 2	WARP ANCHORAGE ARTCC	30AA	DN
DED	08	AIRFORCE DED 1	ELMENDORF AFB	30AA	DN
DED	09	AIRFORCE DED 2	ELMENDORF AFU	30AA	DN
DED	**10**	**NWS DED 1**	**NWS ANCHORAGE 33.6K**	**30AA**	**DN**
DED	11	NWS DED 2	TBD	30AA	DN
DED	12	NWS DED 3	NWS AWIPS	30AA	DN

ATTACHMENT 2 (Continued)

SITE SPECIFIC NARROWBAND CIRCUIT REPORTS

```
                    **  ANCHORAGE FAA (RPG 1)  **

                        RECONFIGURATION CONTROL                    PAGE 1 OF 4
COMMAND:  AD,*****,NB,*****,RE,
FEEDBACK:                                                   OPER; A / R; 21


(M)ODIFY,{NO}       (E)ND       (C)ANCEL        (P)age,{N PAGES}
(I)nsert,{NO}       (D)elete,{NO}   (U)pdate,{Y/N}

NO  LINE  DEVICE  COMMS   LINE    BAUD    LINE    PUPID/  DISTRIB  TIME LIMIT
    NUM   ID MNE  OPTION  CLASS   RATE    TYPE    PASSWD* METHOD   MINUTES
-------------------------------------------------------------------------------

-------------------------------------------------------------------------------
1   1     J01       N     NAPUP   14400   DIALIN
2   2     J02       N     NAPUP   14400   DIALIN
3   3     J03       N     NAPUP   14400   DIALIN
4   4     J04       N     NAPUP   14400   DIALIN
5   5     J05       N     NAPUP   14400   DIALIN
6   6     J06       N     NAPUP   14400   DIALIN
7   7     J07       N     NAPUP   14400   DIALIN
8   8     J08       N     NAPUP   14400   DIALIN

                        RECONFIGURATION CONTROL                    PAGE 2 OF 4
COMMAND:  AD,*****,NB,*****,RE,
FEEDBACK:                                                   OPER; A / R; 21


(M)ODIFY,{NO}       (E)ND       (C)ANCEL        (P)age,{N PAGES}
(I)nsert,{NO}       (D)elete,{NO}   (U)pdate,{Y/N}

NO  LINE  DEVICE  COMMS   LINE    BAUD    LINE    PUPID/  DISTRIB  TIME LIMIT
    NUM   ID MNE  OPTION  CLASS   RATE    TYPE    PASSWD* METHOD   MINUTES
-------------------------------------------------------------------------------

-------------------------------------------------------------------------------
9   9     J09       N     NAPUP   14400   DIALIN
10  10    J10       N     NAPUP   14400   DIALIN
11  11    J11       N     NAPUP   14400   DIALIN
12  12    J12       N     NAPUP   14400   DIALIN
13  13    J13       N     NAPUP   14400   DIALIN
14  14    J14       N     NAPUP   14400   DIALIN
15  15    J15       N     NAPUP   14400   DIALIN
16  16    J16       N     APUP    14400   DEDIC
```

ATTACHMENT 2 (Continued)

SITE SPECIFIC NARROWBAND CIRCUIT REPORTS

```
                    **  ANCHORAGE FAA (RPG 1)  **

                        RECONFIGURATION CONTROL                    PAGE 3 OF 4
COMMAND:  AD,*****,NB,*****,RE,
FEEDBACK:                                                   OPER; A / R; 21


(M)ODIFY,{NO}       (E)ND       (C)ANCEL        (P)age,{N PAGES}
(I)nsert,{NO}       (D)elete,{NO}   (U)pdate,{Y/N}

NO  LINE  DEVICE  COMMS   LINE    BAUD    LINE    PUPID/  DISTRIB  TIME LIMIT
    NUM   ID MNE  OPTION  CLASS   RATE    TYPE    PASSWD* METHOD   MINUTES
-------------------------------------------------------------------------------

-------------------------------------------------------------------------------
17  17    J17       N     OTHER   14400   DEDIC           RSET
18  18    J18       N     OTHER   14400   DEDIC           RSET
19  19    J19       N     OTHER   14400   DEDIC           RSET
20  20    J20       N     APUP    14400   DEDIC
21  21    J21       N     OTHER   14400   DEDIC           RSET
22  22    J22       N     APUP    14400   DEDIC
23  23    J23       N     APUP    14400   DEDIC
24  24    J24       Y     RPGOP   33600   DEDIC   RGOP

                        RECONFIGURATION CONTROL                    PAGE 4 OF 4
COMMAND:  AD,*****,NB,*****,RE,
FEEDBACK:                                                   OPER; A / R; 21


(M)ODIFY,{NO}       (E)ND       (C)ANCEL        (P)age,{N PAGES}
(I)nsert,{NO}       (D)elete,{NO}   (U)pdate,{Y/N}

NO  LINE  DEVICE  COMMS   LINE    BAUD    LINE    PUPID/  DISTRIB  TIME LIMIT
    NUM   ID MNE  OPTION  CLASS   RATE    TYPE    PASSWD* METHOD   MINUTES
-------------------------------------------------------------------------------

-------------------------------------------------------------------------------
25  25    J25       N     APUP    14400   DEDIC
26  26    J26       N     APUP    14400   DEDIC
```

ATTACHMENT 2 (Continued)

SITE SPECIFIC NARROWBAND CIRCUIT REPORTS

NEXRAD RPG NARROWBAND CIRCUIT REPORT

TYPE	CKNTO	USAGE	CONNECTIVITY	COMM CLIN	RADAR CLIN
**BETHEL FAA (RPG 1)					
**1-RJ21X					
D/U	01	NWS DIAL 1		30AF	AD
D/U	02	NWS DIAL 2		30AG	AD
D/U	03	NWS DIAL 3		30AC	AD
D/U	04	NWS DIAL 4		30AC	AD
D/U	05	NWS DIAL 5		30AC	AD
D/U	06	NWS DIAL 6		30AC	AD
D/U	07	NWS DIAL 7		30AC	AD
D/U	08	AIR FORCE DIAL 1		30AC	AD
D/U	09	AIR FORCE DIAL 2		30AC	AD
D/U	10	AIR FORCE DIAL 3		30AC	AD
D/U	11	AIR FORCE DIAL 4		30AC	AD
D/U	12	CORPS OF ENGINEERS		30AC	AD
D/U	13	US NAVY DIAL 1		30AC	AD
D/U	14	FAA DIAL 1		30AC	AD
D/U	15	FAA DIAL 2		30AC	AD
**RJ11					
D/U	n/	** INTERCOM **		05TE	AD
**2-RJ2DX					
DED	01	** REMOTE UCP **	FAA ARTCC BETHEL	30AB	AD
DED	02	NIDS 1	Temporarily Unassigned (WARP0)	30AH	AD
DED	03	NIDS 2	W.S.I.	30AH	AD
DED	04	NIDS 3	Kavouras	30AH	AD
DED	05	NIDS 4	Alden	30AH	AD
DED	06	FAA DED 1	none designated	30AA	AD
DED	07	FAA DED 2	WARP Anchorage ARTCC	30AA	AD
DED	**08**	**NWS DED 1**	**NWS ANCHORAGE 33.6K**	**30AA**	**AD**
DED	09	NWS DED 2	NWS AWIPS	30AA	AD

ATTACHMENT 2 (Continued)

SITE SPECIFIC NARROWBAND CIRCUIT REPORTS

```
                    **  BETHEL FAA (RPG 1)  **

                     RECONFIGURATION CONTROL                    PAGE 1 OF 3
COMMAND:  AD,*****,NB,*****,RE,
FEEDBACK:                                                  OPER; A / R; 21


(M)ODIFY,{NO}       (E)ND       (C)ANCEL        (P)age,{N PAGES}
(I)nsert,{NO}       (D)elete,{NO}   (U)pdate,{Y/N}

NO  LINE  DEVICE  COMMS   LINE    BAUD    LINE    PUPID/  DISTRIB  TIME LIMIT
    NUM   ID MNE  OPTION  CLASS   RATE    TYPE    PASSWD* METHOD   MINUTES
-------------------------------------------------------------------------------

-------------------------------------------------------------------------------
1   1     J01       N     NAPUP   14400   DIALIN
2   2     J02       N     NAPUP   14400   DIALIN
3   3     J03       N     NAPUP   14400   DIALIN
4   4     J04       N     NAPUP   14400   DIALIN
5   5     J05       N     NAPUP   14400   DIALIN
6   6     J06       N     NAPUP   14400   DIALIN
7   7     J07       N     NAPUP   14400   DIALIN
8   8     J08       N     NAPUP   14400   DIALIN

                     RECONFIGURATION CONTROL                    PAGE 2 OF 3
COMMAND:  AD,*****,NB,*****,RE,
FEEDBACK:                                                  OPER; A / R; 21


(M)ODIFY,{NO}       (E)ND       (C)ANCEL        (P)age,{N PAGES}
(I)nsert,{NO}       (D)elete,{NO}   (U)pdate,{Y/N}

NO  LINE  DEVICE  COMMS   LINE    BAUD    LINE    PUPID/  DISTRIB  TIME LIMIT
    NUM   ID MNE  OPTION  CLASS   RATE    TYPE    PASSWD* METHOD   MINUTES
-------------------------------------------------------------------------------

-------------------------------------------------------------------------------
9   9     J09       N     NAPUP   14400   DIALIN
10  10    J10       N     NAPUP   14400   DIALIN
11  11    J11       N     NAPUP   14400   DIALIN
12  12    J12       N     NAPUP   14400   DIALIN
13  13    J13       N     NAPUP   14400   DIALIN
14  14    J14       N     NAPUP   14400   DIALIN
15  15    J15       N     NAPUP   14400   DIALIN
16  16    J16       N     APUP    14400   DEDIC
```

ATTACHMENT 2 (Continued)

SITE SPECIFIC NARROWBAND CIRCUIT REPORTS

```
                    **  BETHEL FAA (RPG 1)  **

                     RECONFIGURATION CONTROL                    PAGE 3 OF 3
COMMAND:  AD,*****,NB,*****,RE,
FEEDBACK:                                                  OPER; A / R; 21


(M)ODIFY,{NO}       (E)ND       (C)ANCEL        (P)age,{N PAGES}
(I)nsert,{NO}       (D)elete,{NO}   (U)pdate,{Y/N}
```

NO	LINE NUM	DEVICE ID MNE	COMMS OPTION	LINE CLASS	BAUD RATE	LINE TYPE	PUPID/ PASSWD*	DISTRIB METHOD	TIME LIMIT MINUTES
17	17	J17	N	OTHER	14400	DEDIC		RSET	
18	18	J18	N	OTHER	14400	DEDIC		RSET	
19	19	J19	N	OTHER	14400	DEDIC		RSET	
20	20	J20	N	APUP	14400	DEDIC			
21	21	J21	N	OTHER	14400	DEDIC		RSET	
22	**22**	**J22**	**Y**	**RPGOP**	**33600**	**DEDIC**	**RGOP**		
23	23	J23	N	APUP	14400	DEDIC			

ATTACHMENT 2 (Continued)

SITE SPECIFIC NARROWBAND CIRCUIT REPORTS

NEXRAD RPG NARROWBAND CIRCUIT REPORT

TYPE	CKNTO	USAGE	CONNECTIVITY	COMM CLIN	RADAR CLIN
**FAIRBANKS FAA (RPG 1)					
**1-RJ21X					
D/U	01	NWS DIAL 1		30AF	HA
D/U	02	NWS DIAL 2		30AG	HA
D/U	03	NWS DIAL 3		30AC	HA
D/U	04	NWS DIAL 4		30AC	HA
D/U	05	NWS DIAL 5		30AC	HA
D/U	06	NWS DIAL 6		30AC	HA
D/U	07	NWS DIAL 7		30AC	HA
D/U	08	AIR FORCE DIAL 1		30AC	HA
D/U	09	AIR FORCE DIAL 2		30AC	HA
D/U	10	AIR FORCE DIAL 3		30AC	HA
D/U	11	AIR FORCE DIAL 4		30AC	HA
D/U	12	CORPS OF ENGINEERS		30AC	HA
D/U	13	US NAVY DIAL 1		30AC	HA
D/U	14	FAA DIAL 1		30AC	HA
D/U	15	FAA DIAL 2		30AC	HA
**RJ11					
D/U	n/	**INTERCOM**		05TE	HA
**2-RJ2DX					
DED	01	**REMOTE UCP**	ATCT FAIR./WFO FAIR.	30AB	HA
DED	02	NIDS 1	Temporarily Unassigned (WARP0)	30AH	HA
DED	03	NIDS 2	W.S.I.	30AH	HA
DED	04	NIDS 3	Kavouras	30AH	HA
DED	05	TBD	none designated	30AH	HA
DED	06	FAA DED 1	none designated	30AA	HA
DED	07	FAA DED 2	WARP STAGE 0	30AA	HA
DED	08	AIRFORCE DED 1	EIELSON AFB	30AA	HA
DED	09	AIRFORCE DED 2	FT. WAINWRIGHT	30AA	HA
DED	**10**	**NWS DED 1**	**NWS FAIRBANKS 33.6K**	**30AA**	**HA**
DED	11	NWS DED 2	none designated	30AA	HA
DED	12	NWS DED 3	NWS AWIPS	30AA	HA

ATTACHMENT 2 (Continued)

SITE SPECIFIC NARROWBAND CIRCUIT REPORTS

```
                    **  FAIRBANKS FAA (RPG 1)  **

                       RECONFIGURATION CONTROL                    PAGE 1 OF 4
COMMAND:  AD,*****,NB,*****,RE,
FEEDBACK:                                                   OPER; A / R; 21


(M)ODIFY,{NO}       (E)ND       (C)ANCEL        (P)age,{N PAGES}
(I)nsert,{NO}       (D)elete,{NO}   (U)pdate,{Y/N}

NO  LINE  DEVICE  COMMS   LINE    BAUD    LINE    PUPID/  DISTRIB  TIME LIMIT
    NUM   ID MNE  OPTION  CLASS   RATE    TYPE    PASSWD* METHOD   MINUTES
-------------------------------------------------------------------------------

-------------------------------------------------------------------------------
1   1     J01       N     NAPUP   14400   DIALIN
2   2     J02       N     NAPUP   14400   DIALIN
3   3     J03       N     NAPUP   14400   DIALIN
4   4     J04       N     NAPUP   14400   DIALIN
5   5     J05       N     NAPUP   14400   DIALIN
6   6     J06       N     NAPUP   14400   DIALIN
7   7     J07       N     NAPUP   14400   DIALIN
8   8     J08       N     NAPUP   14400   DIALIN

                       RECONFIGURATION CONTROL                    PAGE 2 OF 4
COMMAND:  AD,*****,NB,*****,RE,
FEEDBACK:                                                   OPER; A / R; 21


(M)ODIFY,{NO}       (E)ND       (C)ANCEL        (P)age,{N PAGES}
(I)nsert,{NO}       (D)elete,{NO}   (U)pdate,{Y/N}

NO  LINE  DEVICE  COMMS   LINE    BAUD    LINE    PUPID/  DISTRIB  TIME LIMIT
    NUM   ID MNE  OPTION  CLASS   RATE    TYPE    PASSWD* METHOD   MINUTES
-------------------------------------------------------------------------------

-------------------------------------------------------------------------------
9   9     J09       N     NAPUP   14400   DIALIN
10  10    J10       N     NAPUP   14400   DIALIN
11  11    J11       N     NAPUP   14400   DIALIN
12  12    J12       N     NAPUP   14400   DIALIN
13  13    J13       N     NAPUP   14400   DIALIN
14  14    J14       N     NAPUP   14400   DIALIN
15  15    J15       N     NAPUP   14400   DIALIN
16  16    J16       N     APUP    14400   DEDIC
```

ATTACHMENT 2 (Continued)

SITE SPECIFIC NARROWBAND CIRCUIT REPORTS

** FAIRBANKS FAA (RPG 1) **

RECONFIGURATION CONTROL PAGE 3 OF 4
COMMAND: AD,*****,NB,*****,RE,
FEEDBACK: OPER; A / R; 21

(M)ODIFY,{NO} (E)ND (C)ANCEL (P)age,{N PAGES}
(I)nsert,{NO} (D)elete,{NO} (U)pdate,{Y/N}

NO	LINE NUM	DEVICE ID MNE	COMMS OPTION	LINE CLASS	BAUD RATE	LINE TYPE	PUPID/ PASSWD*	DISTRIB METHOD	TIME LIMIT MINUTES
17	17	J17	N	OTHER	14400	DEDIC		RSET	
18	18	J18	N	OTHER	14400	DEDIC		RSET	
19	19	J19	N	OTHER	14400	DEDIC		RSET	
20	20	J20	N	APUP	14400	DEDIC			
21	21	J21	N	OTHER	14400	DEDIC		RSET	
22	22	J22	N	APUP	14400	DEDIC			
23	23	J23	N	APUP	14400	DEDIC			
24	**24**	**J24**	**Y**	**RPGOP**	**33600**	**DEDIC**	**RGOP**		

RECONFIGURATION CONTROL PAGE 4 OF 4
COMMAND: AD,*****,NB,*****,RE,
FEEDBACK: OPER; A / R; 21

(M)ODIFY,{NO} (E)ND (C)ANCEL (P)age,{N PAGES}
(I)nsert,{NO} (D)elete,{NO} (U)pdate,{Y/N}

NO	LINE NUM	DEVICE ID MNE	COMMS OPTION	LINE CLASS	BAUD RATE	LINE TYPE	PUPID/ PASSWD*	DISTRIB METHOD	TIME LIMIT MINUTES
25	25	J25	N	APUP	14400	DEDIC			
26	26	J26	N	APUP	14400	DEDIC			
27	27	J27	N						
28	28	J28	N						

ATTACHMENT 2 (Continued)

SITE SPECIFIC NARROWBAND CIRCUIT REPORTS

NEXRAD RPG NARROWBAND CIRCUIT REPORT

TYPE	CKNTO	USAGE	CONNECTIVITY	COMM CLIN	RADAR CLIN
**KAMUELA/KOHALA APT(RPG 1)					
**1-RJ21X					
D/U	01	NWS DIAL 1		30AF	EX
D/U	02	NWS DIAL 2		30AG	EX
D/U	03	NWS DIAL 3		30AC	EX
D/U	04	NWS DIAL 4		30AC	EX
D/U	05	NWS DIAL 5		30AC	EX
D/U	06	NWS DIAL 6		30AC	EX
D/U	07	NWS DIAL 7		30AC	EX
D/U	08	AIR FORCE DIAL 1		30AC	EX
D/U	09	AIR FORCE DIAL 2		30AC	EX
D/U	10	AIR FORCE DIAL 3		30AC	EX
D/U	11	AIR FORCE DIAL 4		30AC	EX
D/U	12	US NAVY DIAL 1		30AC	EX
D/U	13	USMC GEN'L PURPOSE		30AC	EX
D/U	14	FAA DIAL 1		30AC	EX
D/U	15	FAA DIAL 2		30AC	EX
**RJ11					
D/U	n/	** INTERCOM **		05TE	EX
**2-RJ2DX					
DED	01	** REMOTE UCP **	FAA CERAP HONOLULU	30AB	EX
DED	02	NIDS 1	Paramax	30AH	EX
DED	03	NIDS 2	W.S.I.	30AH	EX
DED	04	NIDS 3	Kavouras	30AH	EX
DED	05	TBD	none designated	30AH	EX
DED	06	FAA DED 1	none designated	30AA	EX
DED	07	FAA DED 2	WARP ARTCC	30AA	EX
DED	**08**	**NWS DED 1**	**NWS HONOLULU 33.6K**	**30AA**	**EX**
DED	09	NWS DED 2	HONOLULU WFO AWIPS	30AA	EX

ATTACHMENT 2 (Continued)

SITE SPECIFIC NARROWBAND CIRCUIT REPORTS

```
**  KAMUELA/KOHALA APT(RPG 1)  **

                    RECONFIGURATION CONTROL                    PAGE 1 OF 3
COMMAND:  AD,*****,NB,*****,RE,
FEEDBACK:                                                 OPER; A / R; 21


(M)ODIFY,{NO}       (E)ND       (C)ANCEL        (P)age,{N PAGES}
(I)nsert,{NO}       (D)elete,{NO}   (U)pdate,{Y/N}

NO  LINE  DEVICE  COMMS   LINE    BAUD    LINE    PUPID/  DISTRIB  TIME LIMIT
    NUM   ID MNE  OPTION  CLASS   RATE    TYPE    PASSWD* METHOD   MINUTES
-------------------------------------------------------------------------------

-------------------------------------------------------------------------------
1   1     J01       N     NAPUP   14400   DIALIN
2   2     J02       N     NAPUP   14400   DIALIN
3   3     J03       N     NAPUP   14400   DIALIN
4   4     J04       N     NAPUP   14400   DIALIN
5   5     J05       N     NAPUP   14400   DIALIN
6   6     J06       N     NAPUP   14400   DIALIN
7   7     J07       N     NAPUP   14400   DIALIN
8   8     J08       N     NAPUP   14400   DIALIN

                    RECONFIGURATION CONTROL                    PAGE 2 OF 3
COMMAND:  AD,*****,NB,*****,RE,
FEEDBACK:                                                 OPER; A / R; 21


(M)ODIFY,{NO}       (E)ND       (C)ANCEL        (P)age,{N PAGES}
(I)nsert,{NO}       (D)elete,{NO}   (U)pdate,{Y/N}

NO  LINE  DEVICE  COMMS   LINE    BAUD    LINE    PUPID/  DISTRIB  TIME LIMIT
    NUM   ID MNE  OPTION  CLASS   RATE    TYPE    PASSWD* METHOD   MINUTES
-------------------------------------------------------------------------------

-------------------------------------------------------------------------------
9   9     J09       N     NAPUP   14400   DIALIN
10  10    J10       N     NAPUP   14400   DIALIN
11  11    J11       N     NAPUP   14400   DIALIN
12  12    J12       N     NAPUP   14400   DIALIN
13  13    J13       N     NAPUP   14400   DIALIN
14  14    J14       N     NAPUP   14400   DIALIN
15  15    J15       N     NAPUP   14400   DIALIN
16  16    J16       N     OTHER   14400   DEDIC            RSET
```

ATTACHMENT 2 (Continued)

SITE SPECIFIC NARROWBAND CIRCUIT REPORTS

```
**  KAMUELA/KOHALA APT(RPG 1)  **

                    RECONFIGURATION CONTROL                    PAGE 3 OF 3
COMMAND:  AD,*****,NB,*****,RE,
FEEDBACK:                                                 OPER; A / R; 21


(M)ODIFY,{NO}       (E)ND       (C)ANCEL        (P)age,{N PAGES}
(I)nsert,{NO}       (D)elete,{NO}   (U)pdate,{Y/N}
```

NO	LINE NUM	DEVICE ID MNE	COMMS OPTION	LINE CLASS	BAUD RATE	LINE TYPE	PUPID/ PASSWD*	DISTRIB METHOD	TIME LIMIT MINUTES
17	17	J17	N	OTHER	14400	DEDIC		RSET	
18	18	J18	N	OTHER	14400	DEDIC		RSET	
19	19	J19	N	OTHER	14400	DEDIC		RSET	
20	20	J20	N	APUP	14400	DEDIC			
21	21	J21	N	APUP	14400	DEDIC			
22	**22**	**J22**	**Y**	**RPGOP**	**33600**	**DEDIC**	**RGOP**		
23	23	J23	N	APUP	14400	DEDIC			

ATTACHMENT 2 (Continued)

SITE SPECIFIC NARROWBAND CIRCUIT REPORTS

NEXRAD RPG NARROWBAND CIRCUIT REPORT

TYPE	CKNTO	USAGE	CONNECTIVITY	COMM CLIN	RADAR CLIN
**KING SALMON FAA (RPG 1)					
**1-RJ21X					
D/U	01	NWS DIAL 1		30AF	IY
D/U	02	NWS DIAL 2		30AG	IY
D/U	03	NWS DIAL 3		30AC	IY
D/U	04	NWS DIAL 4		30AC	IY
D/U	05	NWS DIAL 5		30AC	IY
D/U	06	NWS DIAL 6		30AC	IY
D/U	07	NWS DIAL 7		30AC	IY
D/U	08	AIR FORCE DIAL 1		30AC	IY
D/U	09	AIR FORCE DIAL 2		30AC	IY
D/U	10	AIR FORCE DIAL 3		30AC	IY
D/U	11	AIR FORCE DIAL 4		30AC	IY
D/U	12	CORPS OF ENGINEERS		30AC	IY
D/U	13	US NAVY DIAL 1		30AC	IY
D/U	14	FAA DIAL 1		30AC	IY
D/U	15	FAA DIAL 2		30AC	IY
**RJ11					
D/U	n/	** INTERCOM **		05TE	IY
**2-RJ2DX					
DED	01	** REMOTE UCP **	FAA ARTCC ANCHORAGE	30AB	IY
DED	02	NIDS 1 - Paramax	Temporarily Unassigned (WARP0)	30AH	IY
DED	03	NIDS 2	W.S.I.	30AH	IY
DED	04	NIDS 3	Kavouras	30AH	IY
DED	05	TBD	none designated	30AH	IY
DED	06	FAA DED 1	none designated	30AA	IY
DED	07	FAA DED 2	WARP STAGE 0	30AA	IY
DED	**08**	**NWS DED 1**	**RFC ANCHORAGE 33.6K**	**30AA**	**IY**
DED	09	NWS DED 2	none designated	30AA	IY
DED	10	NWS DED 3	NWS AWIPS	30AA	IY

ATTACHMENT 2 (Continued)

SITE SPECIFIC NARROWBAND CIRCUIT REPORTS

```
                    **  KING SALMON FAA (RPG 1)  **

                        RECONFIGURATION CONTROL                    PAGE 1 OF 4
COMMAND:  AD,*****,NB,*****,RE,
FEEDBACK:                                                   OPER; A / R; 21


(M)ODIFY,{NO}       (E)ND       (C)ANCEL        (P)age,{N PAGES}
(I)nsert,{NO}       (D)elete,{NO}   (U)pdate,{Y/N}

NO  LINE  DEVICE  COMMS   LINE    BAUD    LINE    PUPID/  DISTRIB  TIME LIMIT
    NUM   ID MNE  OPTION  CLASS   RATE    TYPE    PASSWD* METHOD   MINUTES
-------------------------------------------------------------------------------

-------------------------------------------------------------------------------
1   1     J01       N     NAPUP   14400   DIALIN
2   2     J02       N     NAPUP   14400   DIALIN
3   3     J03       N     NAPUP   14400   DIALIN
4   4     J04       N     NAPUP   14400   DIALIN
5   5     J05       N     NAPUP   14400   DIALIN
6   6     J06       N     NAPUP   14400   DIALIN
7   7     J07       N     NAPUP   14400   DIALIN
8   8     J08       N     NAPUP   14400   DIALIN

                        RECONFIGURATION CONTROL                    PAGE 2 OF 4
COMMAND:  AD,*****,NB,*****,RE,
FEEDBACK:                                                   OPER; A / R; 21


(M)ODIFY,{NO}       (E)ND       (C)ANCEL        (P)age,{N PAGES}
(I)nsert,{NO}       (D)elete,{NO}   (U)pdate,{Y/N}

NO  LINE  DEVICE  COMMS   LINE    BAUD    LINE    PUPID/  DISTRIB  TIME LIMIT
    NUM   ID MNE  OPTION  CLASS   RATE    TYPE    PASSWD* METHOD   MINUTES
-------------------------------------------------------------------------------

-------------------------------------------------------------------------------
9   9     J09       N     NAPUP   14400   DIALIN
10  10    J10       N     NAPUP   14400   DIALIN
11  11    J11       N     NAPUP   14400   DIALIN
12  12    J12       N     NAPUP   14400   DIALIN
13  13    J13       N     NAPUP   14400   DIALIN
14  14    J14       N     NAPUP   14400   DIALIN
15  15    J15       N     NAPUP   14400   DIALIN
16  16    J16       N     APUP    14400   DEDIC
```

ATTACHMENT 2 (Continued)

SITE SPECIFIC NARROWBAND CIRCUIT REPORTS

```
**  KING SALMON FAA (RPG 1)  **

                    RECONFIGURATION CONTROL                    PAGE 3 OF 4
COMMAND:  AD,*****,NB,*****,RE,
FEEDBACK:                                                 OPER; A / R; 21


(M)ODIFY,{NO}       (E)ND       (C)ANCEL        (P)age,{N PAGES}
(I)nsert,{NO}       (D)elete,{NO}   (U)pdate,{Y/N}
```

NO	LINE NUM	DEVICE ID MNE	COMMS OPTION	LINE CLASS	BAUD RATE	LINE TYPE	PUPID/ PASSWD*	DISTRIB METHOD	TIME LIMIT MINUTES
17	17	J17	N	OTHER	14400	DEDIC		RSET	
18	18	J18	N	OTHER	14400	DEDIC		RSET	
19	19	J19	N	OTHER	14400	DEDIC		RSET	
20	20	J20	N	APUP	14400	DEDIC			
21	21	J21	N	OTHER	14400	DEDIC		RSET	
22	**22**	**J22**	**Y**	**RPGOP**	**33600**	**DEDIC**	**RGOP**		
23	23	J23	N	APUP	14400	DEDIC			
24	24	J24	N	APUP	14400	DEDIC			

ATTACHMENT 2 (Continued)

SITE SPECIFIC NARROWBAND CIRCUIT REPORTS

NEXRAD RPG NARROWBAND CIRCUIT REPORT

TYPE	CKNTO	USAGE	CONNECTIVITY	COMM CLIN	RADAR CLIN
**MIDDLETON ISLAND (RPG 1)					
**1-RJ21X					
D/U	01	NWS DIAL 1		30AF	GO
D/U	02	NWS DIAL 2		30AG	GO
D/U	03	NWS DIAL 3		30AC	GO
D/U	04	NWS DIAL 4		30AC	GO
D/U	05	NWS DIAL 5		30AC	GO
D/U	06	NWS DIAL 6		30AC	GO
D/U	07	NWS DIAL 7		30AC	GO
D/U	08	AIR FORCE DIAL 1		30AC	GO
D/U	09	AIR FORCE DIAL 2		30AC	GO
D/U	10	AIR FORCE DIAL 3		30AC	GO
D/U	11	AIR FORCE DIAL 4		30AC	GO
D/U	12	CORPS OF ENGINEERS		30AC	GO
D/U	13	US NAVY DIAL 1		30AC	GO
D/U	14	FAA DIAL 1		30AC	GO
D/U	15	FAA DIAL 2		30AC	GO
**RJ11					
D/U	n/	** INTERCOM **		05TE	GO
**2-RJ2DX					
DED	01	** REMOTE UCP **	AT FAA RDA SHELTER	30AB	GO
DED	02	NIDS 1	Paramax	30AH	GO
DED	03	NIDS 2	W.S.I.	30AH	GO
DED	04	NIDS 3	Kavouras	30AH	GO
DED	05	TBD	none designated	30AH	GO
DED	06	FAA DED 1	none designated	30AA	GO
DED	07	FAA DED 2	WARP ANCHORAGE ARTCC	30AA	GO
DED	08	AIRFORCE DED1	none designated	30AA	GO
DED	**09**	**NWS DED 1**	**AK Aviation WX Unit, 33.6K**	**30AA**	**GO**
DED	10	NWS DED 2	NWS AWIPS	30AA	GO

ATTACHMENT 2 (Continued)

SITE SPECIFIC NARROWBAND CIRCUIT REPORTS

```
                    **  MIDDLETON ISLAND (RPG 1)  **

                        RECONFIGURATION CONTROL                    PAGE 1 OF 4
COMMAND:  AD,*****,NB,*****,RE,
FEEDBACK:                                                   OPER; A / R; 21


(M)ODIFY,{NO}       (E)ND       (C)ANCEL        (P)age,{N PAGES}
(I)nsert,{NO}       (D)elete,{NO}   (U)pdate,{Y/N}

NO  LINE  DEVICE  COMMS   LINE    BAUD    LINE    PUPID/  DISTRIB  TIME LIMIT
    NUM   ID MNE  OPTION  CLASS   RATE    TYPE    PASSWD* METHOD   MINUTES
-------------------------------------------------------------------------------

-------------------------------------------------------------------------------
1   1     J01       N     NAPUP   14400   DIALIN
2   2     J02       N     NAPUP   14400   DIALIN
3   3     J03       N     NAPUP   14400   DIALIN
4   4     J04       N     NAPUP   14400   DIALIN
5   5     J05       N     NAPUP   14400   DIALIN
6   6     J06       N     NAPUP   14400   DIALIN
7   7     J07       N     NAPUP   14400   DIALIN
8   8     J08       N     NAPUP   14400   DIALIN

                        RECONFIGURATION CONTROL                    PAGE 2 OF 4
COMMAND:  AD,*****,NB,*****,RE,
FEEDBACK:                                                   OPER; A / R; 21


(M)ODIFY,{NO}       (E)ND       (C)ANCEL        (P)age,{N PAGES}
(I)nsert,{NO}       (D)elete,{NO}   (U)pdate,{Y/N}

NO  LINE  DEVICE  COMMS   LINE    BAUD    LINE    PUPID/  DISTRIB  TIME LIMIT
    NUM   ID MNE  OPTION  CLASS   RATE    TYPE    PASSWD* METHOD   MINUTES
-------------------------------------------------------------------------------

-------------------------------------------------------------------------------
9   9     J09       N     NAPUP   14400   DIALIN
10  10    J10       N     NAPUP   14400   DIALIN
11  11    J11       N     NAPUP   14400   DIALIN
12  12    J12       N     NAPUP   14400   DIALIN
13  13    J13       N     NAPUP   14400   DIALIN
14  14    J14       N     NAPUP   14400   DIALIN
15  15    J15       N     NAPUP   14400   DIALIN
16  16    J16       N     APUP    14400   DEDIC
```

ATTACHMENT 2 (Continued)

SITE SPECIFIC NARROWBAND CIRCUIT REPORTS

```
                    **  MIDDLETON ISLAND (RPG 1)  **

                        RECONFIGURATION CONTROL                    PAGE 3 OF 4
COMMAND:  AD,*****,NB,*****,RE,
FEEDBACK:                                                   OPER; A / R; 21


(M)ODIFY,{NO}       (E)ND       (C)ANCEL        (P)age,{N PAGES}
(I)nsert,{NO}       (D)elete,{NO}   (U)pdate,{Y/N}
```

NO	LINE NUM	DEVICE ID MNE	COMMS OPTION	LINE CLASS	BAUD RATE	LINE TYPE	PUPID/ PASSWD*	DISTRIB METHOD	TIME LIMIT MINUTES
17	17	J17	N	OTHER	14400	DEDIC		RSET	
18	18	J18	N	OTHER	14400	DEDIC		RSET	
19	19	J19	N	APUP	14400	DEDIC			
20	20	J20	N	APUP	14400	DEDIC			
21	21	J21	N	OTHER	14400	DEDIC		RSET	
22	22	J22	N	APUP	14400	DEDIC			
23	**23**	**J23**	**Y**	**RPGOP**	**33600**	**DEDIC**	**RGOP**		
24	24	J24	N	APUP	14400	DEDIC			

ATTACHMENT 2 (Continued)

SITE SPECIFIC NARROWBAND CIRCUIT REPORTS

NEXRAD RPG NARROWBAND CIRCUIT REPORT

TYPE	CKNTO	USAGE	CONNECTIVITY	COMM CLIN	RADAR CLIN
**MOLOKAI FAA (RPG 1)					
**1-RJ21X					
D/U	01	NWS DIAL 1		30AF	DE
D/U	02	NWS DIAL 2		30AG	DE
D/U	03	NWS DIAL 3		30AC	DE
D/U	04	NWS DIAL 4		30AC	DE
D/U	05	NWS DIAL 5		30AC	DE
D/U	06	NWS DIAL 6		30AC	DE
D/U	07	NWS DIAL 7		30AC	DE
D/U	08	AIR FORCE DIAL 1		30AC	DE
D/U	09	AIR FORCE DIAL 2		30AC	DE
D/U	10	AIR FORCE DIAL 3		30AC	DE
D/U	11	AIR FORCE DIAL 4		30AC	DE
D/U	12	US NAVY DIAL 1		30AC	DE
D/U	13	USMC DIAL 1		30AC	DE
D/U	14	FAA DIAL 1		30AC	DE
D/U	15	FAA DIAL 2		30AC	DE
**RJ11					
D/U	n/	** INTERCOM **		05TE	DE
**2-RJ2DX					
DED	01	** REMOTE UCP **		30AB	DE
DED	02	NIDS 1	Paramax	30AH	DE
DED	03	NIDS 2	W.S.I.	30AH	DE
DED	04	NIDS 3	Kavouras	30AH	DE
DED	05	TBD	none designated	30AH	DE
DED	06	FAA DED 1	FAA CERAP HONOLULU	30AA	DE
DED	07	FAA DED 2	none desingated	30AA	DE
DED	08	AIRFORCE DED 1	HICKAM AFB	30AA	DE
DED	09	USMC DED 1	MCAS KANEOHE BAY	30AA	DE
DED	10	USN DED 1	NAS BARBERS PT.	30AA	DE
DED	11	USN DED 2	NPMOC/JTWC	30AA	DE
DED	12	AIRFORCE DED 2	WHEELER AFB	30AA	DE

ATTACHMENT 2 (Continued)

SITE SPECIFIC NARROWBAND CIRCUIT REPORTS

**4-RJ2DX

DED	**01**	**NWS DED 1**	**NWS HONOLULU 33.6K**	**30AA**	**DE**
DED	02	NWS DED 2	NWS PACIFIC REG HQ	30AD	DE
DED	03	NWS DED 3	WFO HONOLULU AWIPS	30AA	DE

ATTACHMENT 2 (Continued)

SITE SPECIFIC NARROWBAND CIRCUIT REPORTS

```
                    **  MOLOKAI FAA (RPG 1)  **

                      RECONFIGURATION CONTROL                    PAGE 1 OF 4
COMMAND:  AD,*****,NB,*****,RE,
FEEDBACK:                                                   OPER; A / R; 21


(M)ODIFY,{NO}       (E)ND       (C)ANCEL        (P)age,{N PAGES}
(I)nsert,{NO}       (D)elete,{NO}   (U)pdate,{Y/N}

NO  LINE  DEVICE  COMMS   LINE    BAUD    LINE    PUPID/  DISTRIB  TIME LIMIT
    NUM   ID MNE  OPTION  CLASS   RATE    TYPE    PASSWD* METHOD   MINUTES
-------------------------------------------------------------------------------

-------------------------------------------------------------------------------
1   1     J01       N     NAPUP   14400   DIALIN
2   2     J02       N     RFC     14400   DIALIN
3   3     J03       N     NAPUP   14400   DIALIN
4   4     J04       N     NAPUP   14400   DIALIN
5   5     J05       N     NAPUP   14400   DIALIN
6   6     J06       N     NAPUP   14400   DIALIN
7   7     J07       N     NAPUP   14400   DIALIN
8   8     J08       N     NAPUP   14400   DIALIN

                      RECONFIGURATION CONTROL                    PAGE 2 OF 4
COMMAND:  AD,*****,NB,*****,RE,
FEEDBACK:                                                   OPER; A / R; 21


(M)ODIFY,{NO}       (E)ND       (C)ANCEL        (P)age,{N PAGES}
(I)nsert,{NO}       (D)elete,{NO}   (U)pdate,{Y/N}

NO  LINE  DEVICE  COMMS   LINE    BAUD    LINE    PUPID/  DISTRIB  TIME LIMIT
    NUM   ID MNE  OPTION  CLASS   RATE    TYPE    PASSWD* METHOD   MINUTES
-------------------------------------------------------------------------------

-------------------------------------------------------------------------------
9   9     J09       N     NAPUP   14400   DIALIN
10  10    J10       N     NAPUP   14400   DIALIN
11  11    J11       N     NAPUP   14400   DIALIN
12  12    J12       N     NAPUP   14400   DIALIN
13  13    J13       N     NAPUP   14400   DIALIN
14  14    J14       N     NAPUP   14400   DIALIN
15  15    J15       N     NAPUP   14400   DIALIN
16  16    J16       N     OTHER   14400   DEDIC            RSET
```

ATTACHMENT 2 (Continued)

SITE SPECIFIC NARROWBAND CIRCUIT REPORTS

** MOLOKAI FAA (RPG 1) **

RECONFIGURATION CONTROL PAGE 3 OF 4
COMMAND: AD,*****,NB,*****,RE,
FEEDBACK: OPER; A / R; 21

(M)ODIFY,{NO} (E)ND (C)ANCEL (P)age,{N PAGES}
(I)nsert,{NO} (D)elete,{NO} (U)pdate,{Y/N}

NO	LINE NUM	DEVICE ID MNE	COMMS OPTION	LINE CLASS	BAUD RATE	LINE TYPE	PUPID/ PASSWD*	DISTRIB METHOD	TIME LIMIT MINUTES
17	17	J17	N	OTHER	14400	DEDIC		RSET	
18	18	J18	N	OTHER	14400	DEDIC		RSET	
19	19	J19	N	OTHER	14400	DEDIC		RSET	
20	20	J20	N	APUP	14400	DEDIC			
21	21	J21	N	APUP	14400	DEDIC			
22	22	J22	N	APUP	14400	DEDIC			
23	23	J23	N	APUP	14400	DEDIC			
24	24	J24	N	APUP	14400	DEDIC			

RECONFIGURATION CONTROL PAGE 4 OF 4
COMMAND: AD,*****,NB,*****,RE,
FEEDBACK: OPER; A / R; 21

(M)ODIFY,{NO} (E)ND (C)ANCEL (P)age,{N PAGES}
(I)nsert,{NO} (D)elete,{NO} (U)pdate,{Y/N}

NO	LINE NUM	DEVICE ID MNE	COMMS OPTION	LINE CLASS	BAUD RATE	LINE TYPE	PUPID/ PASSWD*	DISTRIB METHOD	TIME LIMIT MINUTES
25	25	J25	N	APUP	14400	DEDIC			
26	26	J26	N	APUP	14400	DEDIC			
27	**27**	**J27**	**Y**	**RPGOP**	**33600**	**DEDIC**	**RGOP**		
28	28	J28	N	PUES	9600	DEDIC			
29	29	J29	N	APUP	14400	DEDIC			

ATTACHMENT 2 (Continued)

SITE SPECIFIC NARROWBAND CIRCUIT REPORTS

NEXRAD RPG NARROWBAND CIRCUIT REPORT

TYPE	CKNTO	USAGE	CONNECTIVITY	COMM CLIN	RADAR CLIN
**NOME FAA (RPG 1)					
**1-RJ21X					
D/U	01	NWS DIAL 1		30AF	DP
D/U	02	NWS DIAL 2		30AG	DP
D/U	03	NWS DIAL 3		30AC	DP
D/U	04	NWS DIAL 4		30AC	DP
D/U	05	NWS DIAL 5		30AC	DP
D/U	06	NWS DIAL 6		30AC	DP
D/U	07	NWS DIAL 7		30AC	DP
D/U	08	AIR FORCE DIAL 1		30AC	DP
D/U	09	AIR FORCE DIAL 2		30AC	DP
D/U	10	AIR FORCE DIAL 3		30AC	DP
D/U	11	AIR FORCE DIAL 4		30AC	DP
D/U	12	CORPS OF ENGINEERS		30AC	DP
D/U	13	US NAVY DIAL 1		30AC	DP
D/U	14	FAA DIAL 1		30AC	DP
D/U	15	FAA DIAL 2		30AC	DP
**RJ11					
D/U	n/	** INTERCOM **		05TE	DP
**2-RJ2DX					
DED	01	** REMOTE UCP **	FAA NOME SFO	30AB	DP
DED	02	NIDS 1	Paramax	30AH	DP
DED	03	NIDS 2	W.S.I.	30AH	DP
DED	04	NIDS 3	Kavouras	30AH	DP
DED	05	TBD	none designated	30AH	DP
DED	06	FAA DED 1	none designated	30AA	DP
DED	07	FAA DED 2	WARP STAGE 0 Anchorage ARTCC	30AA	DP
DED	08	NWS DED 1	FAIRBANKS WFO-A	30AA	DP
DED	09	NWS DED 2	FAIRBANKS WFO AWIPS	30AA	DP
DED	**10**	**NWS DED 3**	**NWS FAIRBANKS 33.6K**	**30AA**	**DP**

ATTACHMENT 2 (Continued)

SITE SPECIFIC NARROWBAND CIRCUIT REPORTS

```
                    **  NOME FAA (RPG 1)  **

                    RECONFIGURATION CONTROL                    PAGE 1 OF 4
COMMAND:  AD,*****,NB,*****,RE,
FEEDBACK:                                                 OPER; A / R; 21


(M)ODIFY,{NO}       (E)ND       (C)ANCEL        (P)age,{N PAGES}
(I)nsert,{NO}       (D)elete,{NO}   (U)pdate,{Y/N}

NO  LINE  DEVICE  COMMS   LINE    BAUD    LINE    PUPID/  DISTRIB  TIME LIMIT
    NUM   ID MNE  OPTION  CLASS   RATE    TYPE    PASSWD* METHOD   MINUTES
-------------------------------------------------------------------------------

-------------------------------------------------------------------------------
1   1     J01       N     NAPUP   14400   DIALIN
2   2     J02       N     NAPUP   14400   DIALIN
3   3     J03       N     NAPUP   14400   DIALIN
4   4     J04       N     NAPUP   14400   DIALIN
5   5     J05       N     NAPUP   14400   DIALIN
6   6     J06       N     NAPUP   14400   DIALIN
7   7     J07       N     NAPUP   14400   DIALIN
8   8     J08       N     NAPUP   14400   DIALIN

                    RECONFIGURATION CONTROL                    PAGE 2 OF 4
COMMAND:  AD,*****,NB,*****,RE,
FEEDBACK:                                                 OPER; A / R; 21


(M)ODIFY,{NO}       (E)ND       (C)ANCEL        (P)age,{N PAGES}
(I)nsert,{NO}       (D)elete,{NO}   (U)pdate,{Y/N}

NO  LINE  DEVICE  COMMS   LINE    BAUD    LINE    PUPID/  DISTRIB  TIME LIMIT
    NUM   ID MNE  OPTION  CLASS   RATE    TYPE    PASSWD* METHOD   MINUTES
-------------------------------------------------------------------------------

-------------------------------------------------------------------------------
9   9     J09       N     NAPUP   14400   DIALIN
10  10    J10       N     NAPUP   14400   DIALIN
11  11    J11       N     NAPUP   14400   DIALIN
12  12    J12       N     NAPUP   14400   DIALIN
13  13    J13       N     NAPUP   14400   DIALIN
14  14    J14       N     NAPUP   14400   DIALIN
15  15    J15       N     NAPUP   14400   DIALIN
16  16    J16       N     APUP    14400   DEDIC
```

ATTACHMENT 2 (Continued)

SITE SPECIFIC NARROWBAND CIRCUIT REPORTS

```
                    **  NOME FAA (RPG 1)  **

                    RECONFIGURATION CONTROL                    PAGE 3 OF 4
COMMAND:  AD,*****,NB,*****,RE,
FEEDBACK:                                                 OPER; A / R; 21


(M)ODIFY,{NO}       (E)ND       (C)ANCEL        (P)age,{N PAGES}
(I)nsert,{NO}       (D)elete,{NO}   (U)pdate,{Y/N}
```

NO	LINE NUM	DEVICE ID MNE	COMMS OPTION	LINE CLASS	BAUD RATE	LINE TYPE	PUPID/ PASSWD*	DISTRIB METHOD	TIME LIMIT MINUTES
17	17	J17	N	OTHER	14400	DEDIC		RSET	
18	18	J18	N	OTHER	14400	DEDIC		RSET	
19	19	J19	N	OTHER	14400	DEDIC		RSET	
20	20	J20	N	APUP	14400	DEDIC			
21	21	J21	N	OTHER	14400	DEDIC		RSET	
22	22	J22	N	APUP	14400	DEDIC			
23	23	J23	N	APUP	14400	DEDIC			
24	**24**	**J24**	**Y**	**RPGOP**	**33600**	**DEDIC**	**RGOP**		

ATTACHMENT 2 (Continued)

SITE SPECIFIC NARROWBAND CIRCUIT REPORTS

NEXRAD RPG NARROWBAND CIRCUIT REPORT

TYPE	CKNTO	USAGE	CONNECTIVITY	COMM CLIN	RADAR CLIN
**SAN JUAN FAA (RPG 1)					
**1-RJ21X					
D/U	01	NWS DIAL 1		30AF	GO
D/U	02	NWS DIAL 2		30AG	GO
D/U	03	NWS DIAL 3		30AC	GO
D/U	04	NWS DIAL 4		30AC	GO
D/U	05	NWS DIAL 5		30AC	GO
D/U	06	NWS DIAL 6		30AC	GO
D/U	07	AIR FORCE DIAL 1		30AC	GO
D/U	08	AIR FORCE DIAL 2		30AC	GO
D/U	09	AIR FORCE DIAL 3		30AC	GO
D/U	10	CORPS OF ENGINEERS		30AC	GO
D/U	11	US NAVY DIAL 1		30AC	GO
D/U	12	FAA DIAL 1		30AC	GO
D/U	13	FAA DIAL 2		30AC	GO
**RJ11					
D/U	n/	** INTERCOM **		05TE	GO
**2-RJ2DX					
DED	01	** REMOTE UCP **	FAA CERAP SAN JUAN	30AB	GO
DED	02	NIDS 1 - Paramax	Paramax	30AH	GO
DED	03	NIDS 2	W.S.I.	30AH	GO
DED	04	NIDS 3	Kavouras	30AH	GO
DED	05	TBD	none designated	30AH	GO
DED	06	FAA DED 1	FAA CERAP SAN JUAN	30AA	GO
DED	07	FAA DED 2	WARP Miami	30AA	GO
DED	08	USN DED 1	USN ROOSEVELT ROADS	30AA	GO
DED	**09**	**NWS DED 1**	**NWS SAN JUAN 33.6K**	**30AA**	**GO**
DED	10	NWS DED 2	SAN JUAN WFO AFOS	30AD	GO
DED	11	NWS DED 3	SAN JUAN WFO AWIPS	30AA	GO

ATTACHMENT 2 (Continued)

SITE SPECIFIC NARROWBAND CIRCUIT REPORTS

```
                    **  SAN JUAN FAA (RPG 1)  **

                      RECONFIGURATION CONTROL                    PAGE 1 OF 3
COMMAND:  AD,*****,NB,*****,RE,
FEEDBACK:                                                   OPER; A / R; 21


(M)ODIFY,{NO}       (E)ND       (C)ANCEL        (P)age,{N PAGES}
(I)nsert,{NO}       (D)elete,{NO}   (U)pdate,{Y/N}

NO  LINE  DEVICE  COMMS   LINE    BAUD    LINE    PUPID/  DISTRIB  TIME LIMIT
    NUM   ID MNE  OPTION  CLASS   RATE    TYPE    PASSWD* METHOD   MINUTES
-------------------------------------------------------------------------------

-------------------------------------------------------------------------------
1   1     J01       N     NAPUP   14400   DIALIN
2   2     J02       N     NAPUP   14400   DIALIN
3   3     J03       N     NAPUP   14400   DIALIN
4   4     J04       N     NAPUP   14400   DIALIN
5   5     J05       N     NAPUP   14400   DIALIN
6   6     J06       N     NAPUP   14400   DIALIN
7   7     J07       N     NAPUP   14400   DIALIN
8   8     J08       N     NAPUP   14400   DIALIN

                      RECONFIGURATION CONTROL                    PAGE 2 OF 3
COMMAND:  AD,*****,NB,*****,RE,
FEEDBACK:                                                   OPER; A / R; 21


(M)ODIFY,{NO}       (E)ND       (C)ANCEL        (P)age,{N PAGES}
(I)nsert,{NO}       (D)elete,{NO}   (U)pdate,{Y/N}

NO  LINE  DEVICE  COMMS   LINE    BAUD    LINE    PUPID/  DISTRIB  TIME LIMIT
    NUM   ID MNE  OPTION  CLASS   RATE    TYPE    PASSWD* METHOD   MINUTES
-------------------------------------------------------------------------------

-------------------------------------------------------------------------------
9   9     J09       N     NAPUP   14400   DIALIN
10  10    J10       N     NAPUP   14400   DIALIN
11  11    J11       N     NAPUP   14400   DIALIN
12  12    J12       N     NAPUP   14400   DIALIN
13  13    J13       N     NAPUP   14400   DIALIN
14  14    J14       N     OTHER   14400   DEDIC           RSET
15  15    J15       N     OTHER   14400   DEDIC           RSET
16  16    J16       N     OTHER   14400   DEDIC           RSET
```

ATTACHMENT 2 (Continued)

SITE SPECIFIC NARROWBAND CIRCUIT REPORTS

```
                    **  SAN JUAN FAA (RPG 1)  **

                      RECONFIGURATION CONTROL                    PAGE 3 OF 3
COMMAND:  AD,*****,NB,*****,RE,
FEEDBACK:                                                   OPER; A / R; 21


(M)ODIFY,{NO}       (E)ND       (C)ANCEL        (P)age,{N PAGES}
(I)nsert,{NO}       (D)elete,{NO}   (U)pdate,{Y/N}
```

NO	LINE NUM	DEVICE ID MNE	COMMS OPTION	LINE CLASS	BAUD RATE	LINE TYPE	PUPID/ PASSWD*	DISTRIB METHOD	TIME LIMIT MINUTES
17	17	J17	N	OTHER	14400	DEDIC		RSET	
18	18	J18	N	APUP	14400	DEDIC			
19	19	J19	N	APUP	14400	DEDIC			
20	20	J20	N	APUP	14400	DEDIC			
21	**21**	**J21**	**Y**	**RPGOP**	**33600**	**DEDIC**	**RGOP**		
22	22	J22	N	PUES	9600	DEDIC			
23	23	J23	N	APUP	14400	DEDIC			

ATTACHMENT 2 (Continued)

SITE SPECIFIC NARROWBAND CIRCUIT REPORTS

NEXRAD RPG NARROWBAND CIRCUIT REPORT

TYPE	CKNTO	USAGE	CONNECTIVITY	COMM CLIN	RADAR CLIN
**SITKA FAA (RPG 1)					
**1-RJ21X					
D/U	01	NWS DIAL 1		30AF	ID
D/U	02	NWS DIAL 2		30AG	ID
D/U	03	NWS DIAL 3		30AC	ID
D/U	04	NWS DIAL 4		30AC	ID
D/U	05	NWS DIAL 5		30AC	ID
D/U	06	NWS DIAL 6		30AC	ID
D/U	07	NWS DIAL 7		30AC	ID
D/U	08	AIR FORCE DIAL 1		30AC	ID
D/U	09	AIR FORCE DIAL 2		30AC	ID
D/U	10	AIR FORCE DIAL 3		30AC	ID
D/U	11	AIR FORCE DIAL 4		30AC	ID
D/U	12	CORPS OF ENGINEERS		30AC	ID
D/U	13	US NAVY DIAL 1		30AC	ID
D/U	14	FAA DIAL 1		30AC	ID
D/U	15	FAA DIAL 2		30AC	ID
**RJ11					
D/U	n/	** INTERCOM **		05TE	ID
**2-RJ2DX					
DED	01	** REMOTE UCP **	FAA SITKA FSS	30AB	ID
DED	02	NIDS 1	Temporarily Unassigned (WARP0)	30AH	ID
DED	03	NIDS 2	W.S.I.	30AH	ID
DED	04	NIDS 3	Kavouras	30AH	ID
DED	05	TBD	none designated	30AH	ID
DED	06	FAA DED 1	none designated	30AA	ID
DED	07	FAA DED 2	WARP Anchorage ARTCC	30AA	ID
DED	**08**	**NWS DED 1**	**NWS JUNEAU 33.6K**	**30AA**	**ID**
DED	09	NWS DED 2	none designated	30AA	ID
DED	10	NWS DED 3	NWS AWIPS	30AA	ID

ATTACHMENT 2 (Continued)

SITE SPECIFIC NARROWBAND CIRCUIT REPORTS

```
                    **  SITKA FAA (RPG 1)  **

                    RECONFIGURATION CONTROL                    PAGE 1 OF 4
COMMAND:  AD,*****,NB,*****,RE,
FEEDBACK:                                                 OPER; A / R; 21


(M)ODIFY,{NO}       (E)ND       (C)ANCEL        (P)age,{N PAGES}
(I)nsert,{NO}       (D)elete,{NO}   (U)pdate,{Y/N}

NO  LINE  DEVICE  COMMS   LINE    BAUD    LINE    PUPID/  DISTRIB  TIME LIMIT
    NUM   ID MNE  OPTION  CLASS   RATE    TYPE    PASSWD* METHOD   MINUTES
-------------------------------------------------------------------------------

-------------------------------------------------------------------------------
1   1     J01       N     NAPUP   14400   DIALIN
2   2     J02       N     NAPUP   14400   DIALIN
3   3     J03       N     NAPUP   14400   DIALIN
4   4     J04       N     NAPUP   14400   DIALIN
5   5     J05       N     NAPUP   14400   DIALIN
6   6     J06       N     NAPUP   14400   DIALIN
7   7     J07       N     NAPUP   14400   DIALIN
8   8     J08       N     NAPUP   14400   DIALIN

                    RECONFIGURATION CONTROL                    PAGE 2 OF 4
COMMAND:  AD,*****,NB,*****,RE,
FEEDBACK:                                                 OPER; A / R; 21


(M)ODIFY,{NO}       (E)ND       (C)ANCEL        (P)age,{N PAGES}
(I)nsert,{NO}       (D)elete,{NO}   (U)pdate,{Y/N}

NO  LINE  DEVICE  COMMS   LINE    BAUD    LINE    PUPID/  DISTRIB  TIME LIMIT
    NUM   ID MNE  OPTION  CLASS   RATE    TYPE    PASSWD* METHOD   MINUTES
-------------------------------------------------------------------------------

-------------------------------------------------------------------------------
9   9     J09       N     NAPUP   14400   DIALIN
10  10    J10       N     NAPUP   14400   DIALIN
11  11    J11       N     NAPUP   14400   DIALIN
12  12    J12       N     NAPUP   14400   DIALIN
13  13    J13       N     NAPUP   14400   DIALIN
14  14    J14       N     NAPUP   14400   DIALIN
15  15    J15       N     NAPUP   14400   DIALIN
16  16    J16       N     APUP    14400   DEDIC
```

ATTACHMENT 2 (Continued)

SITE SPECIFIC NARROWBAND CIRCUIT REPORTS

```
                    **  SITKA FAA (RPG 1)  **

                     RECONFIGURATION CONTROL                    PAGE 3 OF 4
COMMAND:  AD,*****,NB,*****,RE,
FEEDBACK:                                                  OPER; A / R; 21


(M)ODIFY,{NO}       (E)ND       (C)ANCEL        (P)age,{N PAGES}
(I)nsert,{NO}       (D)elete,{NO}   (U)pdate,{Y/N}
```

NO	LINE NUM	DEVICE ID MNE	COMMS OPTION	LINE CLASS	BAUD RATE	LINE TYPE	PUPID/ PASSWD*	DISTRIB METHOD	TIME LIMIT MINUTES
17	17	J17	N	OTHER	14400	DEDIC		RSET	
18	18	J18	N	OTHER	14400	DEDIC		RSET	
19	19	J19	N	OTHER	14400	DEDIC		RSET	
20	20	J20	N	APUP	14400	DEDIC			
21	21	J21	N	OTHER	14400	DEDIC		RSET	
22	**22**	**J22**	**Y**	**RPGOP**	**33600**	**DEDIC**	**RGOP**		
23	23	J23	N	APUP	14400	DEDIC			
24	24	J24	N	APUP	14400	DEDIC			

ATTACHMENT 3

EFFECTIVITY

NWS

Site Name	SID	Org Code	RPG Kit	PUP Kit
Alaskan Region				
Anchorage, AK	AFC	WV9904		3
Juneau, AK	JEU	WV9381		1
Fairbanks, AK	AFG	WV9261		2
Pacific Region				
Honolulu, HI	HFO	WW9182		2
San Juan, PR	AJK	WP9526		1

FAA

Bethel, AK	ABC	690112	1	
King Salmon, AK	AKC	690137	1	
Anchorage, AK	AHG	6901AJ	1	
Middleton Island, AK	AIH	690140	1	
Sitka/Biorka Island, AK	ACG	690141	1	
Fairbanks, AK	APD	690178	1	
Nome, AK	AEC	690147	1	
Molokai, HI	HMO	699213	1	
South Kauai, HI	HKI	699211	1	
Kahala, HI	HKM	699235	1	
South Shore, HI	HWA	699201	1	
San Juan, PR	SJU	69F362	1	

MISC

OSF Redundant	CRI02	WG4100	1	1

NWS: Modification Note 57
FAA: EEM Modification Handbook 6345.1 CHG 20, Chap 17

ATTACHMENT 4

HIGH SPEED PUP UPGRADE FROM 14.4 KBPS TO 33.6 KBPS AND INSTALL A/B SWITCHES

Site Name: _____

Site Identifier: _____

Total Time to Complete this Modification Document: _____

Technician's Name(s): _____

Technician's Phone Number: _____

Date Completed: _____

Problem(s) Encountered:

_____

_____

_____

_____

Upon completion of this form, mail, fax, or e-mail this information to the OSF:

1. Mailing Address: System Support Branch, Logistics Section
   WSR-88D Operational Support Facility
   3200 Marshall Ave., Suite 101
   Norman, OK 73072-8028

2. FAX Number: (405) 366-6553
   ATTN: Logistics Section

3. E-mail Address: Logistics@osf.noaa.gov

ATTACHMENT 5

ENGINEERING MANAGEMENT REPORTING SYSTEM
MAINTENANCE RECORD

Document Number: **G 51287**

General Information	1. Open Date	Time	2. Initials	3. Response Priority (check one)	4. Close Date	Time
	04 / 28 / 00	0900	TJS	O Immediate O Low O Routine ☒ Not Applicable	04 / 28 / 00	1500

5. Description
PERFORM MODIFICATION TO THE PUP I.A.W. MOD NOTE 57

Equipment Information	6. Station ID	7. Equipment Code	8. Serial Number	9. TM	10. AT	11. How Mal.
	LIX	PUP	AA312381	M	M	999

12. *EQUIPMENT OPERATIONAL STATUS TIMES*	a. Fully Operational	b. Logistics Delay	Partly Operational	c. All Other	d. Logistics Delay	Not Operational	e. All Other
							6:00

13. *Parts Failure Information*

Block #	a. ASN	b. NSN	c. TM	d. AT	e. How Mal.	f. Qty.	g. Maint. Hrs.
1	NONE						
2							
3							
4							
5							

14. *Work Load Information*

Type	Staff Hrs.
a. Routine	
b. Non-routine	
c. Travel	
d. Misc.	12:00
e. Overtime	

Miscellaneous Information	15. Maintenance Comments	16. Initials
	COMPLETED PUP UPGRADE TO 33.6 KBPS. INSTALLED A/B SWITCH FROM RPG TO PUP AND AWIPS.	TJS

17. *SPECIAL PURPOSE REPORTING*	a. Mod. No.	b. Mod./Act./Deact.Date	c.	d.	e.
	57	04/28/00			

18. *CONFIGURATION MGMT. REPORTING* *(use as directed)*	ASN	Vendor Part Number (New Part)	Serial Number (Old Part)	Serial Number (New Part)

Sample